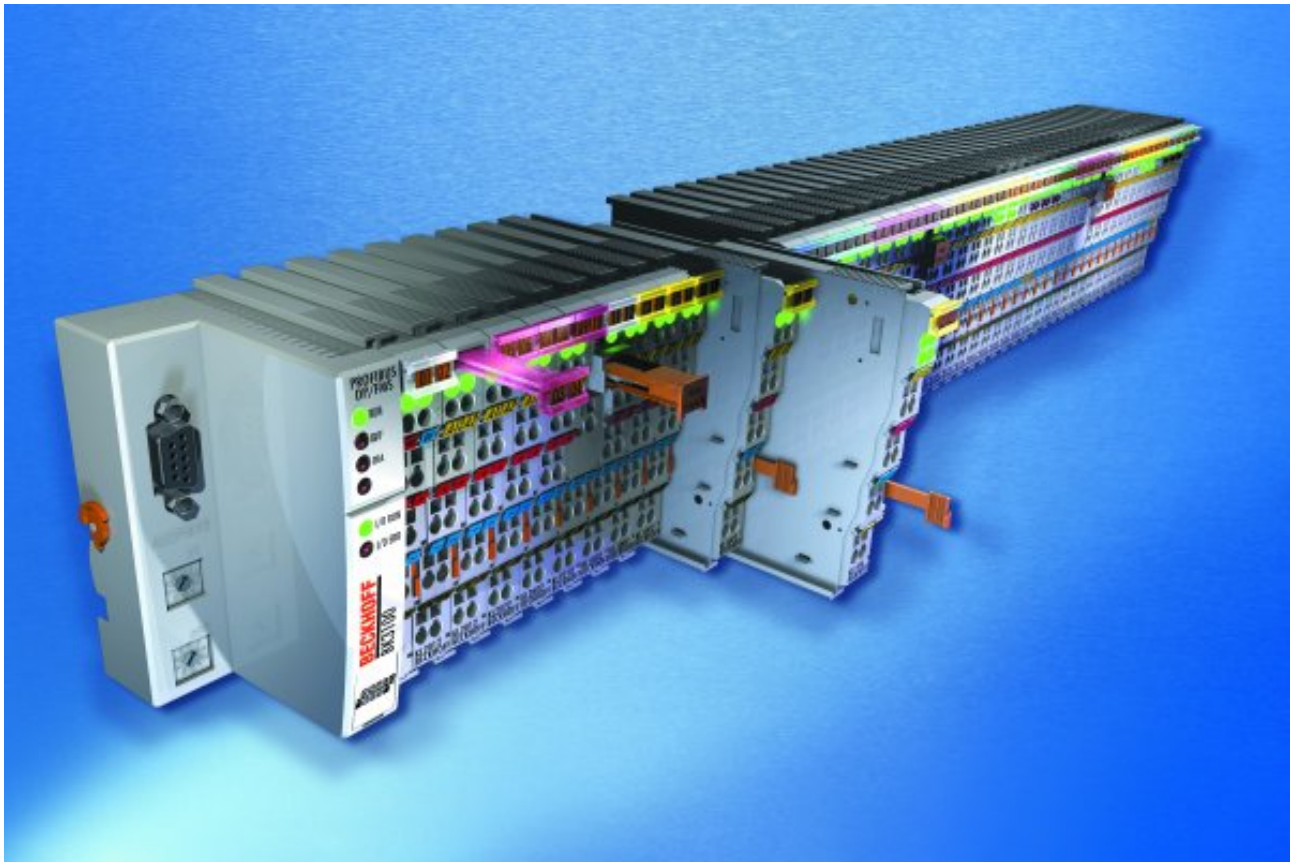

Documentation

KL3208-0010, KL3228-0000, KS3228-0000

Eight channel input terminals for PT1000, NI1000, NTC

EUROTEC
TECNOLOGIE IMPIANTISTICHE - AUTOMAZIONE - TELECONTROLLO

BECKHOFF

Table of contents

1 Foreword ... 5
1.1 Notes on the documentation ... 5
1.2 Safety instructions ... 6
1.3 Documentation issue status ... 7
1.4 Beckhoff Identification Code (BIC) ... 8

2 Product overview ... 10
2.1 KL3208-0010 - Introduction ... 10
2.2 KL3228-0000 - Introduction ... 11
2.3 Technical data ... 12

3 Mounting and wiring ... 13
3.1 Instructions for ESD protection ... 13
3.2 Installation on mounting rails ... 13
3.3 Installation instructions for enhanced mechanical load capacity ... 17
3.4 Connection ... 17
3.4.1 Connection system ... 17
3.4.2 Wiring ... 20
3.4.3 Shielding ... 21
3.5 KL3208-0010 - Connection ... 22
3.6 KL3228-0000 - Connection ... 23
3.7 KL3228 - Positioning within the Bus Terminal Block ... 24
3.8 ATEX - Special conditions (standard temperature range) ... 26
3.9 ATEX - Special conditions (extended temperature range) ... 27
3.10 ATEX Documentation ... 28

4 Configuration Software KS2000 ... 29
4.1 KS2000 - Introduction ... 29
4.2 Parameterization with KS2000 ... 30
4.3 Settings for KL3208-0010 ... 33
4.4 Settings for KL3228-0000 ... 34
4.5 Sample program for KL register communication via EtherCAT on KL3314 exemplary ... 34

5 Access from the user program ... 37
5.1 Process image ... 37
5.2 Control and status bytes ... 38
5.2.1 Process data mode ... 38
5.2.2 Register communication ... 39
5.3 Register overview ... 40
5.4 Register description ... 41
5.5 Examples of Register Communication ... 45
5.5.1 Example 1: reading the firmware version from Register 9 ... 45
5.5.2 Example 2: Writing to an user register ... 45

6 TwinCAT ... 49
6.1 Programming ... 51
6.2 KL3208, KL3228 - Configuration with Function blocks ... 51

7 Appendix ... 52

7.1 Support and Service 52

1 Foreword

1.1 Notes on the documentation

Intended audience

This description is only intended for the use of trained specialists in control and automation engineering who are familiar with the applicable national standards.
It is essential that the documentation and the following notes and explanations are followed when installing and commissioning these components.
It is the duty of the technical personnel to use the documentation published at the respective time of each installation and commissioning.

The responsible staff must ensure that the application or use of the products described satisfy all the requirements for safety, including all the relevant laws, regulations, guidelines and standards.

Disclaimer

The documentation has been prepared with care. The products described are, however, constantly under development.

We reserve the right to revise and change the documentation at any time and without prior announcement.

No claims for the modification of products that have already been supplied may be made on the basis of the data, diagrams and descriptions in this documentation.

Trademarks

Beckhoff®, TwinCAT®, EtherCAT®, EtherCAT G®, EtherCAT G10®, EtherCAT P®, Safety over EtherCAT®, TwinSAFE®, XFC®, XTS® and XPlanar® are registered trademarks of and licensed by Beckhoff Automation GmbH. Other designations used in this publication may be trademarks whose use by third parties for their own purposes could violate the rights of the owners.

Patent Pending

The EtherCAT Technology is covered, including but not limited to the following patent applications and patents: EP1590927, EP1789857, EP1456722, EP2137893, DE102015105702 with corresponding applications or registrations in various other countries.

EtherCAT® is registered trademark and patented technology, licensed by Beckhoff Automation GmbH, Germany.

Copyright

© Beckhoff Automation GmbH & Co. KG, Germany.
The reproduction, distribution and utilization of this document as well as the communication of its contents to others without express authorization are prohibited.
Offenders will be held liable for the payment of damages. All rights reserved in the event of the grant of a patent, utility model or design.

1.2 Safety instructions

Safety regulations

Please note the following safety instructions and explanations!
Product-specific safety instructions can be found on following pages or in the areas mounting, wiring, commissioning etc.

Exclusion of liability

All the components are supplied in particular hardware and software configurations appropriate for the application. Modifications to hardware or software configurations other than those described in the documentation are not permitted, and nullify the liability of Beckhoff Automation GmbH & Co. KG.

Personnel qualification

This description is only intended for trained specialists in control, automation and drive engineering who are familiar with the applicable national standards.

Description of instructions

In this documentation the following instructions are used.
These instructions must be read carefully and followed without fail!

⚠ DANGER

Serious risk of injury!

Failure to follow this safety instruction directly endangers the life and health of persons.

⚠ WARNING

Risk of injury!

Failure to follow this safety instruction endangers the life and health of persons.

⚠ CAUTION

Personal injuries!

Failure to follow this safety instruction can lead to injuries to persons.

NOTE

Damage to environment/equipment or data loss

Failure to follow this instruction can lead to environmental damage, equipment damage or data loss.

Tip or pointer

This symbol indicates information that contributes to better understanding.

1.3 Documentation issue status

Version	Comment
3.2.1	• Update chapter “Register description”
3.2.0	• Update chapter “Instructions for ESD protection” • Chapter “Beckhoff Identification Code (BIC)” added
3.1.0	• Design of the safety instructions adapted to IEC 82079-1 • Chapter *Instructions for ESD protection* added • Update chapter *Connection system -> Connection* • Example program added to chapter “KS2000 Configuration software“
3.0.0	• Migration • Technical data updated • Installation instructions for enhanced mechanical load capacity added • Chapter "TwinCAT" including Link to FB_KL3208Config and FB_KL3228Config added • Chapter "ATEX - Special conditions" replaced with chapter "ATEX - Special conditions (standard temperature range)" and "ATEX - Special conditions (extended temperature range)"
2.2.0	• Process data corrected
2.1.0	• KS2000 configuration mask for KL3208-0010 added • Technical data updated • Register description updated • Information on basic function principles expanded • Approvals extended • ATEX notes added
2.0.1	• KS3228-0000 added
2.0.0	• KL3208-0010 added • KS2000 configuration mask for KL3228-0000 corrected
1.1.0	• Notes on positioning in the Bus Terminal block expanded • Sensor types corrected
1.0.0	• KS2000 configuration mask for KL3208-0000 added • First public issue
0.5	Preliminary Version

Firmware and hardware versions

Documentation Version	KL3208-0010		KL3228-0000, KS3228-0000	
	Firmware	Hardware	Firmware	Hardware
3.2.1	1D	02	3C	01
3.2.0	1D	02	3C	01
3.1.0	1D	02	3C	01
3.0.0	1C	02	3C	01
2.2.0	1C	02	3C	01
2.1.0	1C	02	3C	01
2.0.1	1A	00	3C	00
2.0.0	1A	00	3C	00
1.1.0	-	-	3B	00
1.0.0	-	-	3B	00
0.5	-	-	3A	00

The firmware and hardware versions (delivery state) can be taken from the serial number printed on the side of the terminal.

Syntax of the serial number

Structure of the serial number: WW YY FF HH

WW - week of production (calendar week)
YY - year
FF - firmware version
HH - hardware version

Sample with ser. no.: 20 09 3A 00:

20 - week of production 20
09 - year of production 2009
3A - firmware version 3A
00 - hardware version 00

1.4 Beckhoff Identification Code (BIC)

The Beckhoff Identification Code (BIC) is increasingly being applied to Beckhoff products to uniquely identify the product. The BIC is represented as a Data Matrix Code (DMC, code scheme ECC200), the content is based on the ANSI standard MH10.8.2-2016.

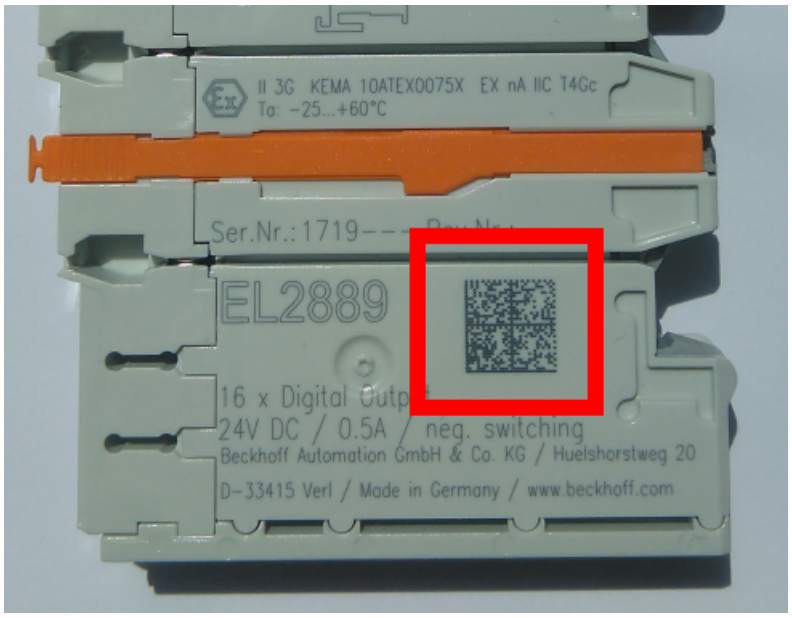

Fig. 1: BIC as data matrix code (DMC, code scheme ECC200)

The BIC will be introduced step by step across all product groups.

Depending on the product, it can be found in the following places:

- on the packaging unit
- directly on the product (if space suffices)
- on the packaging unit and the product

The BIC is machine-readable and contains information that can also be used by the customer for handling and product management.

Each piece of information can be uniquely identified using the so-called data identifier (ANSI MH10.8.2-2016). The data identifier is followed by a character string. Both together have a maximum length according to the table below. If the information is shorter, spaces are added to it. The data under positions 1 to 4 are always available.

The following information is contained:

Item no.	Type of information	Explanation	Data identifier	Number of digits incl. data identifier	Example
1	Beckhoff order number	**Beckhoff order number**	1P	8	1P072222
2	Beckhoff Traceability Number (BTN)	**Unique serial number, see note below**	S	12	SBTNk4p562d7
3	Article description	**Beckhoff article description, e.g. EL1008**	1K	32	1KEL1809
4	Quantity	**Quantity in packaging unit, e.g. 1, 10, etc.**	Q	6	Q1
5	Batch number	Optional: Year and week of production	2P	14	2P401503180016
6	ID/serial number	Optional: Present-day serial number system, e.g. with safety products	51S	12	51S678294104
7	Variant number	Optional: Product variant number on the basis of standard products	30P	32	30PF971, 2*K183
...					

Further types of information and data identifiers are used by Beckhoff and serve internal processes.

Structure of the BIC

Example of composite information from item 1 to 4 and 6. The data identifiers are marked in red for better display:

BTN

An important component of the BIC is the Beckhoff Traceability Number (BTN, item no. 2). The BTN is a unique serial number consisting of eight characters that will replace all other serial number systems at Beckhoff in the long term (e.g. batch designations on IO components, previous serial number range for safety products, etc.). The BTN will also be introduced step by step, so it may happen that the BTN is not yet coded in the BIC.

NOTE

This information has been carefully prepared. However, the procedure described is constantly being further developed. We reserve the right to revise and change procedures and documentation at any time and without prior notice. No claims for changes can be made from the information, illustrations and descriptions in this information.

2 Product overview

2.1 KL3208-0010 - Introduction

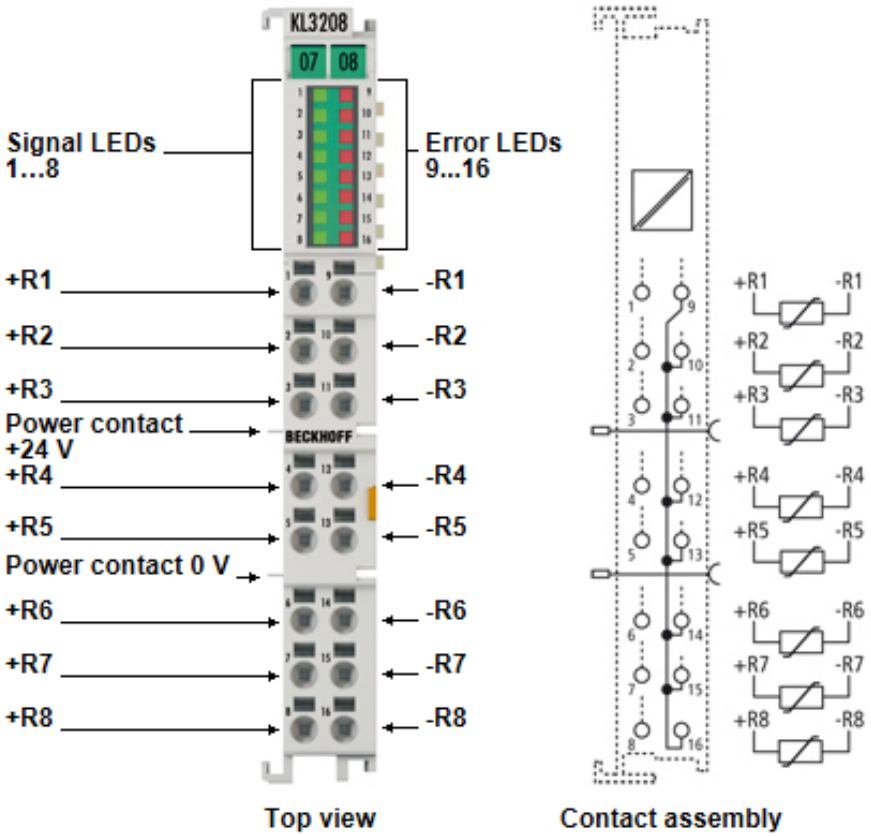

Fig. 2: KL3208-0010

The KL3228-0010 analog input terminal enables connection of eight resistance sensors. The Bus Terminal's circuitry can handle sensors using the 2-wire technique.

Linearization over the entire, freely selectable temperature range is realized with the aid of a microprocessor. The Bus Terminal's standard settings are: Resolution 0,01 °C within the temperature range of Ni1000 sensors.

The signal LEDs indicate that the channel is communicating over the K-bus.
The error LEDs indicate sensor faults (e.g. a broken wire) in the respective channel.

The HD Bus Terminals (High Density) with increased packing density feature 16 connection points in the housing of a 12 mm terminal block.

2.2 KL3228-0000 - Introduction

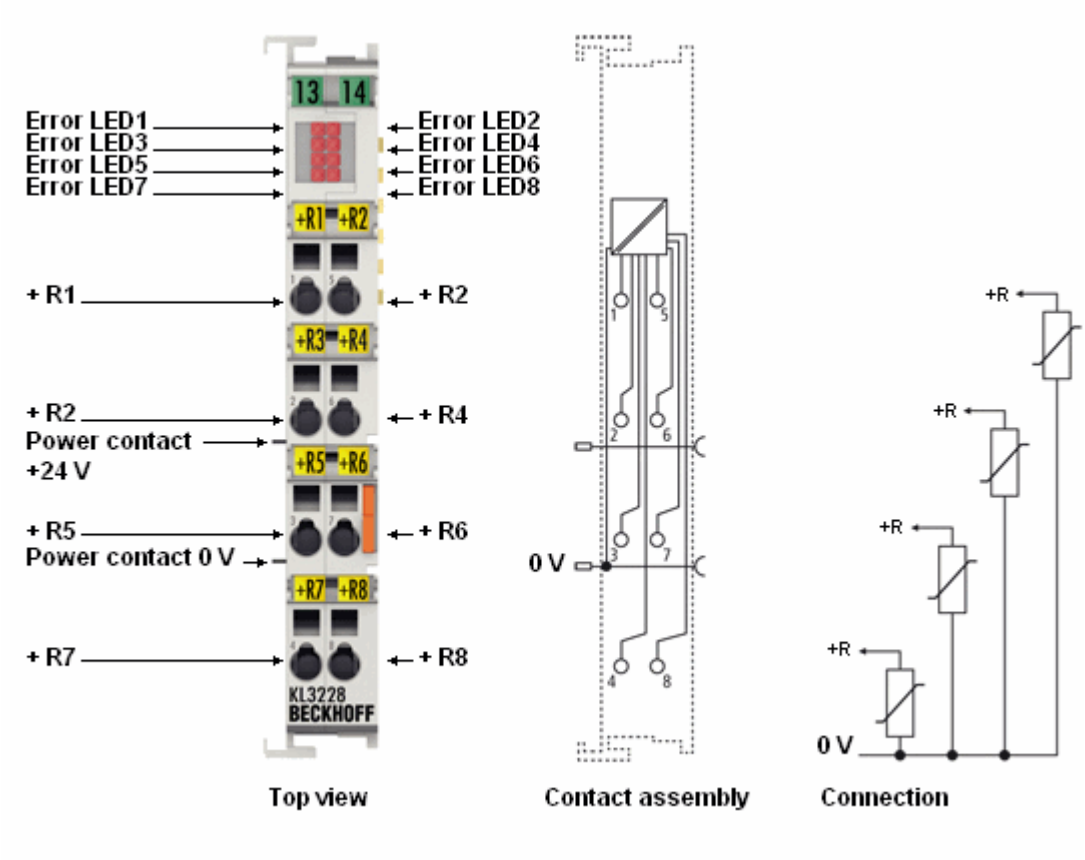

Fig. 3: KL3228

The KL3228 analog input terminal enables connection of eight resistance sensors. The Bus Terminal's circuitry can handle sensors using the 1-wire technique. Linearization over the entire, freely selectable temperature range is realized with the aid of a microprocessor. The terminal has a resolution of 0.1 °C; the standard setting is the sensor type PT1000. The error LEDs indicate sensor faults (e.g. a broken wire).

2.3 Technical data

Technical data		KL3208-0010	KL3228-0000, KS3228-0000
Inputs		8	
Sensor types		PT1000 (default), Ni1000, Potentiometer: 1kΩ /5kΩ / 10kΩ, NTC: 1.8k / 2.2k / 3k / 5k / 10k / 20k / 100k	PT1000 (default), Ni1000
Wiring		2-wire	1-wire
Terminal points		High Density (HD)	standard (KL) pluggable (KS)
Temperature range	Pt sensors	-50°C…+150°C	
	Ni sensors	-50°C…+150°C	
Conversion time		approx. 1 s	
Measuring current		typically 0.5 mA	
Resolution		0.01°C per digit	0.1°C per digit
Measuring error (full measuring range)		-20°C…+60°C: ±0.25 °C (at 25 °C ambient temperature) -50°C…+150°C: ±1.5 °C	±1.0 °C, depending on wiring
Bit width in the input process image		8 status bytes (optional), 8 data words	
Bit width in the output process image		8 control bytes (optional), 8 data words (optional)	
Power supply for the electronics		via the K-bus	
Current consumption from K-bus		typically 85 mA	
Electrical isolation		500 V (K-Bus/signal voltage)	
Weight		approx. 75 g	approx. 75 g
Dimensions (W x H x D)		approx. 15 mm x 100 mm x 70 mm	
Assembly [▶ 13]		on 35 mm mounting rail conforming to EN 60715	
Pluggable wiring		-	at all KSxxxx series terminals
Permissible ambient temperature range during operation		-25 °C ... +60 °C (extended temperature range)	0°C ... + 55°C
Permissible ambient temperature range during storage		-40 °C ... + 85 °C	-25 °C ... + 85 °C
Permissible relative air humidity		95 %, no condensation	
Vibration / shock resistance		conforms to EN 60068-2-6 / EN 60068-2-27 see also Installation instructions for enhanced mechanical load capacity [▶ 17]	
EMC immunity/emission		conforms to EN 61000-6-2 / EN 61000-6-4	
Protection class		IP20	
Installation position		variable	
Approval		CE, ATEX (extended temperature range) [▶ 27], cULus	CE, ATEX (standard temperature range) [▶ 26], cULus

3 Mounting and wiring

3.1 Instructions for ESD protection

NOTE

Destruction of the devices by electrostatic discharge possible!

The devices contain components at risk from electrostatic discharge caused by improper handling.

- Please ensure you are electrostatically discharged and avoid touching the contacts of the device directly.
- Avoid contact with highly insulating materials (synthetic fibers, plastic film etc.).
- Surroundings (working place, packaging and personnel) should by grounded probably, when handling with the devices.
- Each assembly must be terminated at the right hand end with a KL9010 bus end terminal, to ensure the protection class and ESD protection.

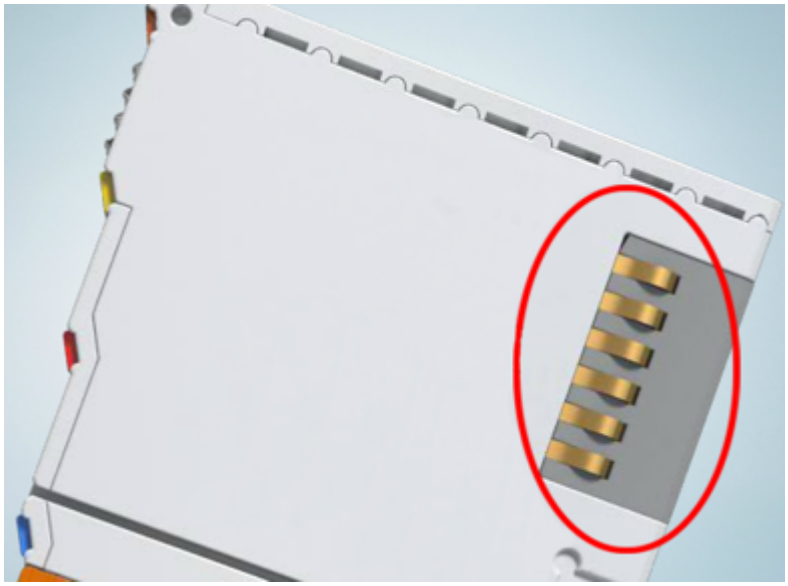

Fig. 4: Spring contacts of the Beckhoff I/O components

3.2 Installation on mounting rails

⚠ WARNING

Risk of electric shock and damage of device!

Bring the bus terminal system into a safe, powered down state before starting installation, disassembly or wiring of the bus terminals!

Assembly

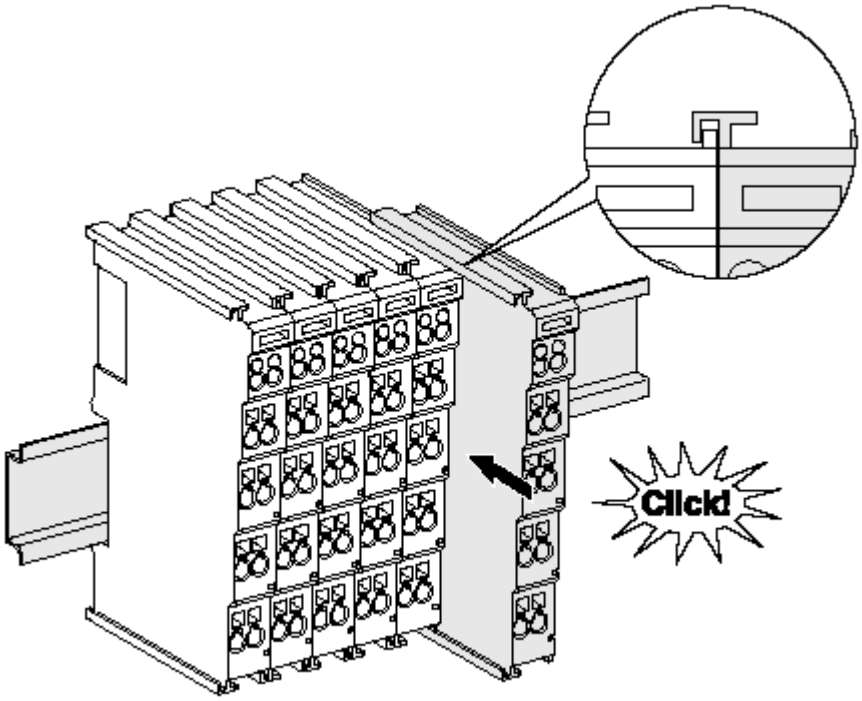

Fig. 5: Attaching on mounting rail

The bus coupler and bus terminals are attached to commercially available 35 mm mounting rails (DIN rails according to EN 60715) by applying slight pressure:

1. First attach the fieldbus coupler to the mounting rail.
2. The bus terminals are now attached on the right-hand side of the fieldbus coupler. Join the components with tongue and groove and push the terminals against the mounting rail, until the lock clicks onto the mounting rail.
   If the terminals are clipped onto the mounting rail first and then pushed together without tongue and groove, the connection will not be operational! When correctly assembled, no significant gap should be visible between the housings.

Fixing of mounting rails

The locking mechanism of the terminals and couplers extends to the profile of the mounting rail. At the installation, the locking mechanism of the components must not come into conflict with the fixing bolts of the mounting rail. To mount the mounting rails with a height of 7.5 mm under the terminals and couplers, you should use flat mounting connections (e.g. countersunk screws or blind rivets).

Disassembly

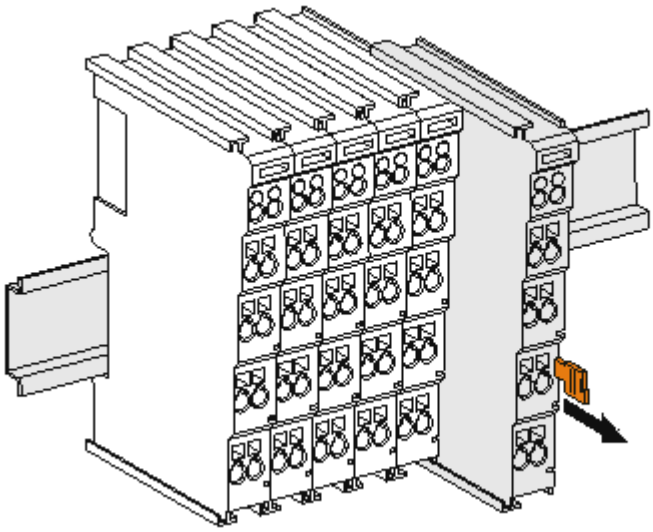

Fig. 6: Disassembling of terminal

Each terminal is secured by a lock on the mounting rail, which must be released for disassembly:

1. Pull the terminal by its orange-colored lugs approximately 1 cm away from the mounting rail. In doing so for this terminal the mounting rail lock is released automatically and you can pull the terminal out of the bus terminal block easily without excessive force.
2. Grasp the released terminal with thumb and index finger simultaneous at the upper and lower grooved housing surfaces and pull the terminal out of the bus terminal block.

Connections within a bus terminal block

The electric connections between the Bus Coupler and the Bus Terminals are automatically realized by joining the components:

- The six spring contacts of the K-Bus/E-Bus deal with the transfer of the data and the supply of the Bus Terminal electronics.
- The power contacts deal with the supply for the field electronics and thus represent a supply rail within the bus terminal block. The power contacts are supplied via terminals on the Bus Coupler (up to 24 V) or for higher voltages via power feed terminals.

Power Contacts

During the design of a bus terminal block, the pin assignment of the individual Bus Terminals must be taken account of, since some types (e.g. analog Bus Terminals or digital 4-channel Bus Terminals) do not or not fully loop through the power contacts. Power Feed Terminals (KL91xx, KL92xx or EL91xx, EL92xx) interrupt the power contacts and thus represent the start of a new supply rail.

PE power contact

The power contact labeled PE can be used as a protective earth. For safety reasons this contact mates first when plugging together, and can ground short-circuit currents of up to 125 A.

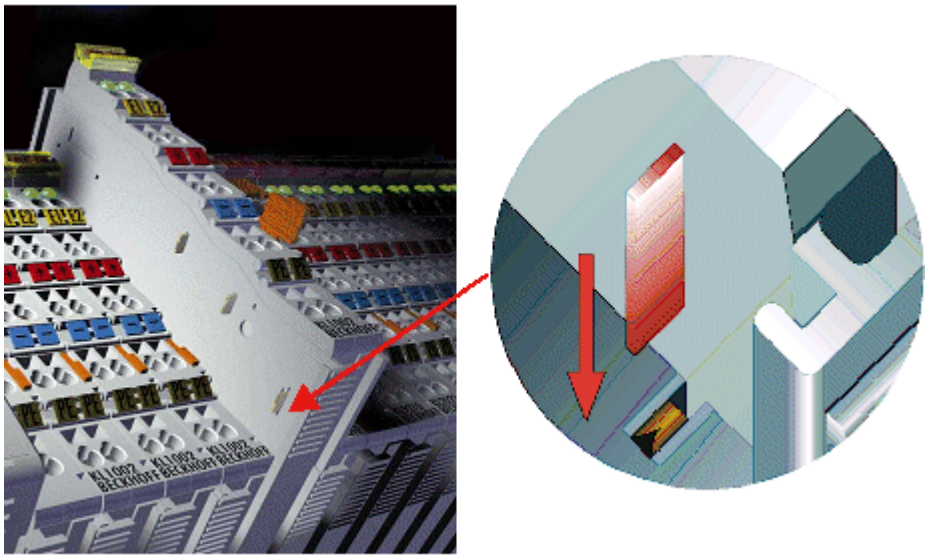

Fig. 7: Power contact on left side

NOTE

Possible damage of the device

Note that, for reasons of electromagnetic compatibility, the PE contacts are capacitatively coupled to the mounting rail. This may lead to incorrect results during insulation testing or to damage on the terminal (e.g. disruptive discharge to the PE line during insulation testing of a consumer with a nominal voltage of 230 V). For insulation testing, disconnect the PE supply line at the Bus Coupler or the Power Feed Terminal! In order to decouple further feed points for testing, these Power Feed Terminals can be released and pulled at least 10 mm from the group of terminals.

⚠ WARNING

Risk of electric shock!

The PE power contact must not be used for other potentials!

3.3 Installation instructions for enhanced mechanical load capacity

⚠ WARNING

Risk of injury through electric shock and damage to the device!

Bring the Bus Terminal system into a safe, de-energized state before starting mounting, disassembly or wiring of the Bus Terminals!

Additional checks

The terminals have undergone the following additional tests:

Verification	Explanation
Vibration	10 frequency runs in 3 axes
	6 Hz < f < 60 Hz displacement 0.35 mm, constant amplitude
	60.1 Hz < f < 500 Hz acceleration 5 *g*, constant amplitude
Shocks	1000 shocks in each direction, in 3 axes
	25 *g*, 6 ms

Additional installation instructions

For terminals with enhanced mechanical load capacity, the following additional installation instructions apply:

- The enhanced mechanical load capacity is valid for all permissible installation positions
- Use a mounting rail according to EN 60715 TH35-15
- Fix the terminal segment on both sides of the mounting rail with a mechanical fixture, e.g. an earth terminal or reinforced end clamp
- The maximum total extension of the terminal segment (without coupler) is:
  64 terminals (12 mm mounting with) or 32 terminals (24 mm mounting with)
- Avoid deformation, twisting, crushing and bending of the mounting rail during edging and installation of the rail
- The mounting points of the mounting rail must be set at 5 cm intervals
- Use countersunk head screws to fasten the mounting rail
- The free length between the strain relief and the wire connection should be kept as short as possible. A distance of approx. 10 cm should be maintained to the cable duct.

3.4 Connection

3.4.1 Connection system

⚠ WARNING

Risk of electric shock and damage of device!

Bring the bus terminal system into a safe, powered down state before starting installation, disassembly or wiring of the bus terminals!

Overview

The Bus Terminal system offers different connection options for optimum adaptation to the respective application:

- The terminals of ELxxxx and KLxxxx series with standard wiring include electronics and connection level in a single enclosure.

- The terminals of ESxxxx and KSxxxx series feature a pluggable connection level and enable steady wiring while replacing.
- The High Density Terminals (HD Terminals) include electronics and connection level in a single enclosure and have advanced packaging density.

Standard wiring (ELxxxx / KLxxxx)

Fig. 8: Standard wiring

The terminals of ELxxxx and KLxxxx series have been tried and tested for years.
They feature integrated screwless spring force technology for fast and simple assembly.

Pluggable wiring (ESxxxx / KSxxxx)

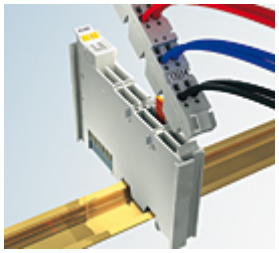

Fig. 9: Pluggable wiring

The terminals of ESxxxx and KSxxxx series feature a pluggable connection level.
The assembly and wiring procedure is the same as for the ELxxxx and KLxxxx series.
The pluggable connection level enables the complete wiring to be removed as a plug connector from the top of the housing for servicing.
The lower section can be removed from the terminal block by pulling the unlocking tab.
Insert the new component and plug in the connector with the wiring. This reduces the installation time and eliminates the risk of wires being mixed up.

The familiar dimensions of the terminal only had to be changed slightly. The new connector adds about 3 mm. The maximum height of the terminal remains unchanged.

A tab for strain relief of the cable simplifies assembly in many applications and prevents tangling of individual connection wires when the connector is removed.

Conductor cross sections between 0.08 mm^2 and 2.5 mm^2 can continue to be used with the proven spring force technology.

The overview and nomenclature of the product names for ESxxxx and KSxxxx series has been retained as known from ELxxxx and KLxxxx series.

High Density Terminals (HD Terminals)

Fig. 10: High Density Terminals

The Bus Terminals from these series with 16 terminal points are distinguished by a particularly compact design, as the packaging density is twice as large as that of the standard 12 mm Bus Terminals. Massive conductors and conductors with a wire end sleeve can be inserted directly into the spring loaded terminal point without tools.

Wiring HD Terminals

The High Density (HD) Terminals of the ELx8xx and KLx8xx series doesn't support pluggable wiring.

Ultrasonically "bonded" (ultrasonically welded) conductors

Ultrasonically “bonded" conductors

It is also possible to connect the Standard and High Density Terminals with ultrasonically "bonded" (ultrasonically welded) conductors. In this case, please note the tables concerning the wire-size width below!

3.4.2 Wiring

⚠ WARNING

Risk of electric shock and damage of device!

Bring the bus terminal system into a safe, powered down state before starting installation, disassembly or wiring of the Bus Terminals!

Terminals for standard wiring ELxxxx/KLxxxx and for pluggable wiring ESxxxx/KSxxxx

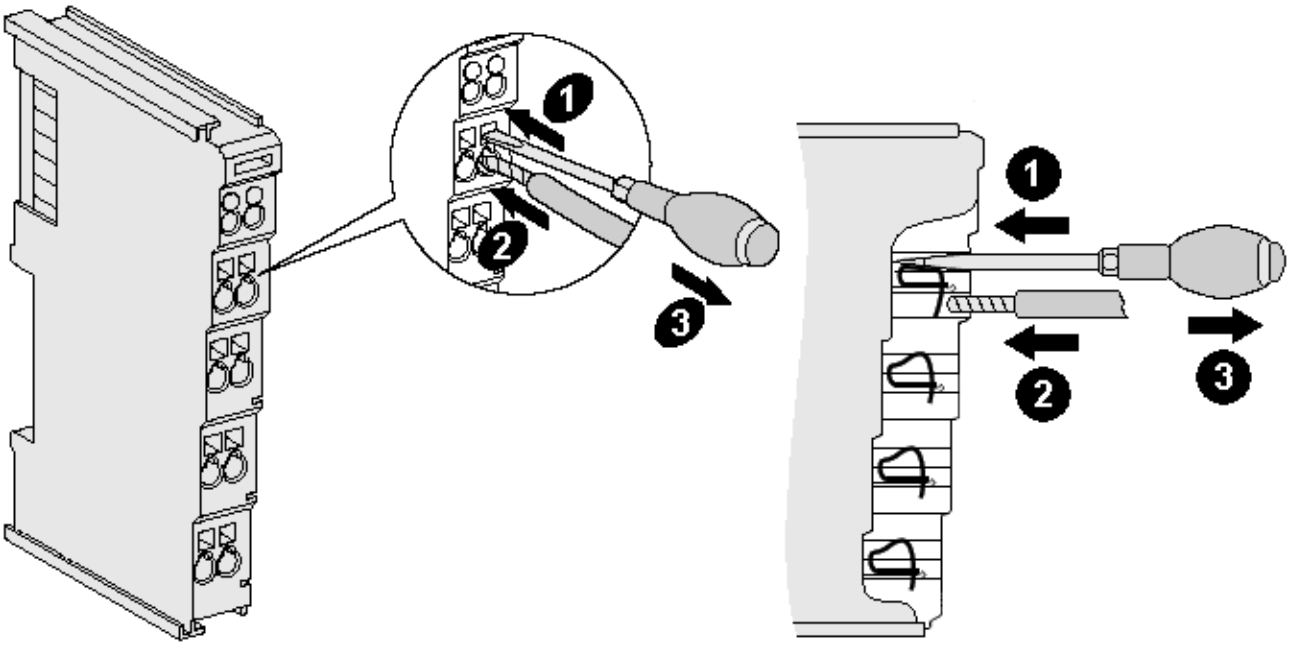

Fig. 11: Connecting a cable on a terminal point

Up to eight terminal points enable the connection of solid or finely stranded cables to the Bus Terminal. The terminal points are implemented in spring force technology. Connect the cables as follows:

1. Open a terminal point by pushing a screwdriver straight against the stop into the square opening above the terminal point. Do not turn the screwdriver or move it alternately (don't toggle).
2. The wire can now be inserted into the round terminal opening without any force.
3. The terminal point closes automatically when the pressure is released, holding the wire securely and permanently.

See the following table for the suitable wire size width.

Terminal housing	ELxxxx, KLxxxx	ESxxxx, KSxxxx
Wire size width (single core wires)	0.08 ... 2.5 mm^2	0.08 ... 2.5 mm^2
Wire size width (fine-wire conductors)	0.08 ... 2.5 mm^2	0,08 ... 2.5 mm^2
Wire size width (conductors with a wire end sleeve)	0.14 ... 1.5 mm^2	0.14 ... 1.5 mm^2
Wire stripping length	8 ... 9 mm	9 ... 10 mm

High Density Terminals (HD Terminals [▶ 19]) with 16 terminal points

The conductors of the HD Terminals are connected without tools for single-wire conductors using the direct plug-in technique, i.e. after stripping the wire is simply plugged into the terminal point. The cables are released, as usual, using the contact release with the aid of a screwdriver. See the following table for the suitable wire size width.

Terminal housing	High Density Housing
Wire size width (single core wires)	0.08 ... 1.5 mm^2
Wire size width (fine-wire conductors)	0.25 ... 1.5 mm^2
Wire size width (conductors with a wire end sleeve)	0.14 ... 0.75 mm^2
Wire size width (ultrasonically “bonded" conductors)	only 1.5 mm^2
Wire stripping length	8 ... 9 mm

3.4.3 Shielding

Shielding

Encoder, analog sensors and actors should always be connected with shielded, twisted paired wires.

3.5 KL3208-0010 - Connection

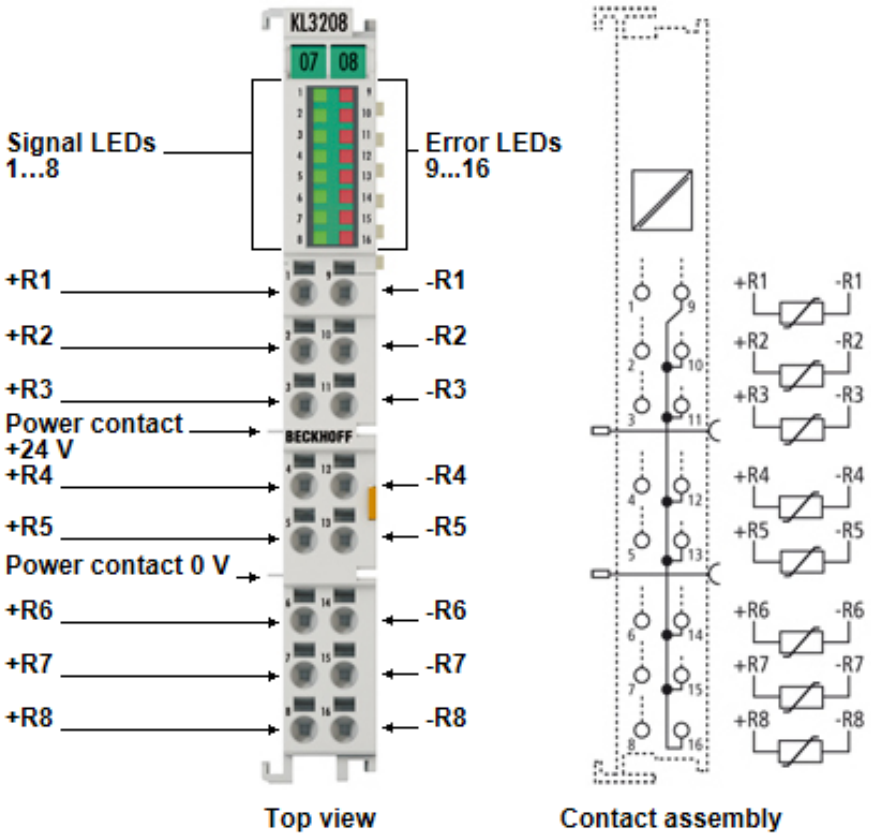

Fig. 12: KL3208-0010 - Connection

Terminal point	No.	Connection for
+R1	1	PT sensor channel 1
+R2	2	PT sensor channel 2
+R3	3	PT sensor channel 3
+R4	4	PT sensor channel 4
+R5	5	PT sensor channel 5
+R6	6	PT sensor channel 6
+R7	7	PT sensor channel 7
+R8	8	PT sensor channel 8
-R1	9	PT sensor channel 1
-R2	10	PT sensor channel 2
-R3	11	PT sensor channel 3
-R4	12	PT sensor channel 4
-R5	13	PT sensor channel 5
-R6	14	PT sensor channel 6
-R7	15	PT sensor channel 7
-R8	16	PT sensor channel 8

3.6 KL3228-0000 - Connection

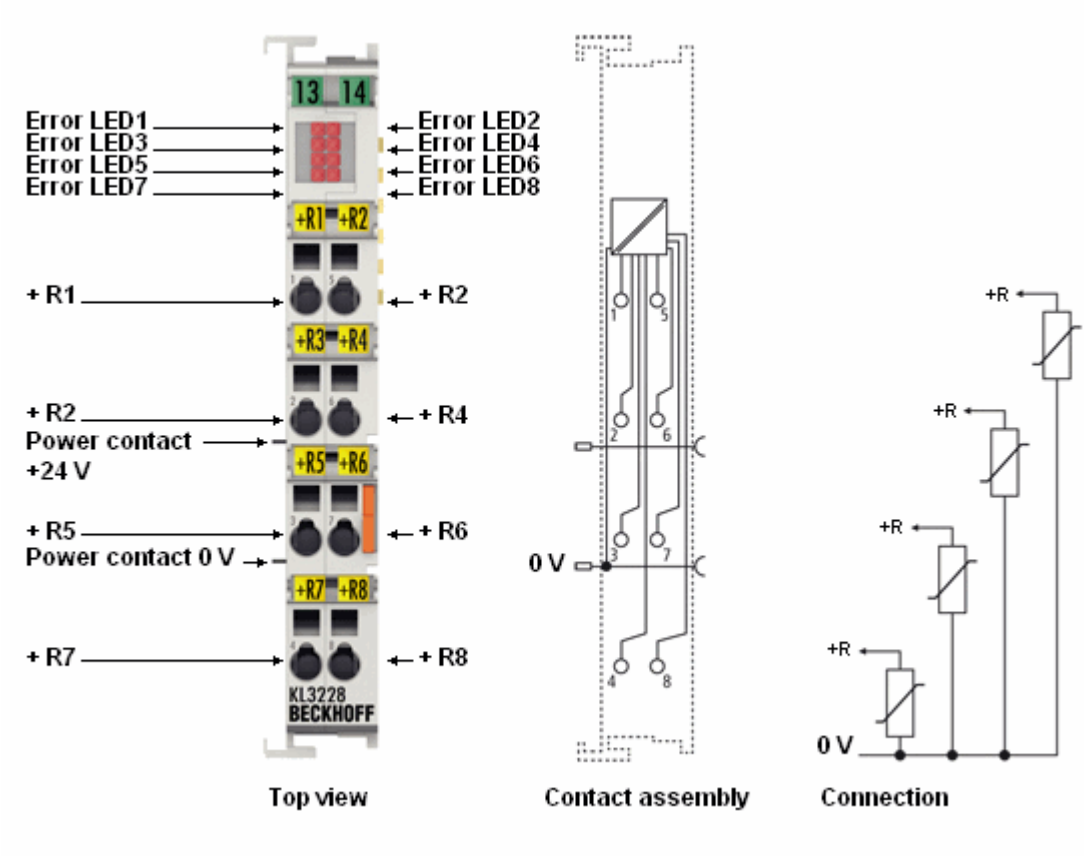

Fig. 13: KL3228-0000 - Connection

Terminal point	No.	Connection for
R1	1	PT sensor channel 1
R2	2	PT sensor channel 2
R3	3	PT sensor channel 3
R4	4	PT sensor channel 4
R5	5	PT sensor channel 5
R6	6	PT sensor channel 6
R7	7	PT sensor channel 7
R8	8	PT sensor channel 8

Connect the back wires of the eight PT sensors via a potential distribution terminal (KL9187). The KL9187 leads the back wires via Power Contact (0 V) back to the KL3228.

Mount the KL3228/KL9187 directly before the KL9010 bus end terminal

Mount the KL3228/KL9187 directly adjacent to each other and as far to the right as possible in the Bus Terminal block, ideally directly before the KL9010 bus end terminal!
If further Bus Terminals that draw current from the power contacts are mounted to the right of the KL3228/KL9187 in the Bus Terminal block, this current will lead to a voltage drop on the power contacts between KL3228 and KL9187. This voltage drop can falsify the measured values of the KL3228, since the back wires of the PT sensors are also routed via the power contact (0 V).
See Positioning within the Bus Terminal Block [▶ 24]

3.7 KL3228 - Positioning within the Bus Terminal Block

Connect the back wires of the eight PT sensors via a potential distribution terminal (KL9187). The KL9187 leads the back wires via Power Contact (0 V) back to the KL3228.

Mount the KL3228/KL9187 directly before the KL9010 bus end terminal

Mount the KL3228/KL9187 directly adjacent to each other and as far to the right as possible in the Bus Terminal block, ideally directly before the KL9010 bus end terminal!
If further Bus Terminals that draw current from the power contacts are mounted to the right of the KL3228/KL9187 in the Bus Terminal block, this current will lead to a voltage drop on the power contacts between KL3228 and KL9187. This voltage drop can falsify the measured values of the KL3228, since the back wires of the PT sensors are also routed via the power contact (0 V).

Example for bad positioning

This example shows the KL3228/KL9187 mounted on the left in the Bus Terminal Block. There are big current consumers mounted to the right side of KL3228/KL9187.

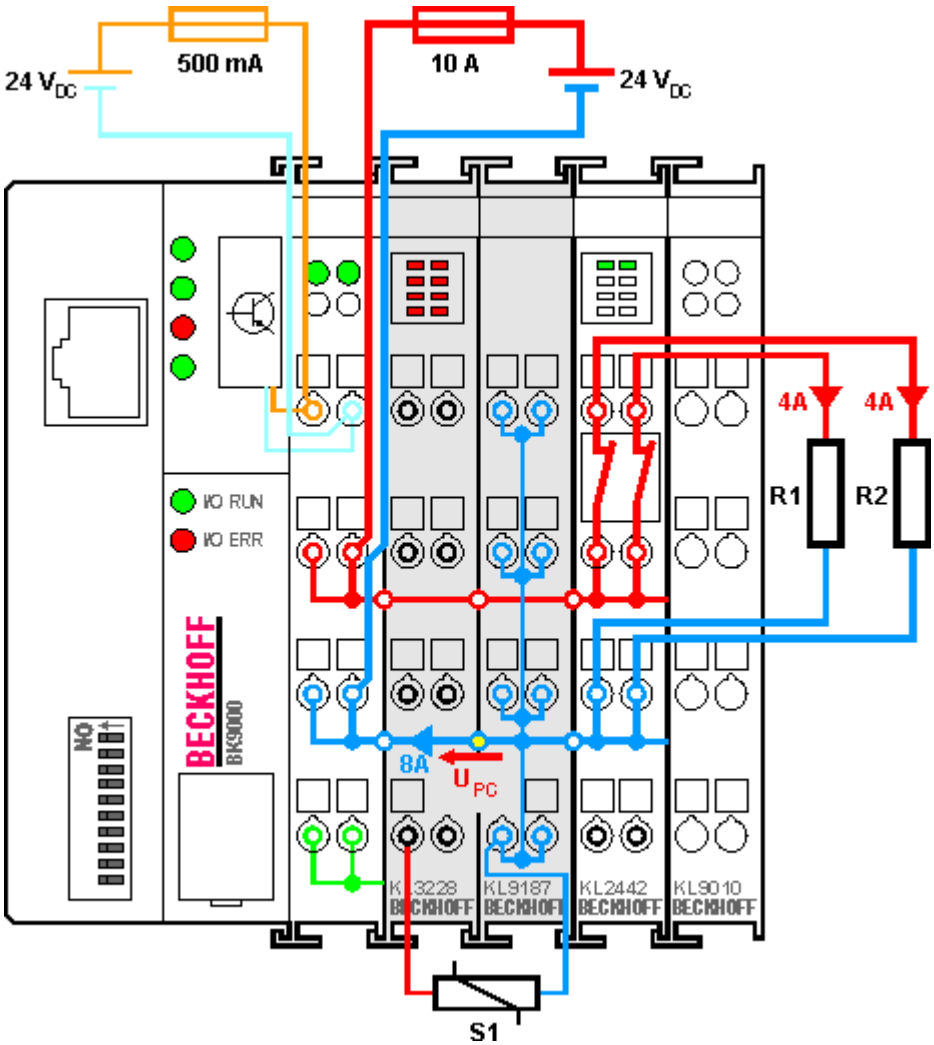

Fig. 14: KL3228/KL9187 - Example for bad positioning

The KL2442 drives a current of 4 A through each of the two load resistors R1 and R2.
This current (8 A in total) must flow back to the power supply unit via the power contacts and causes the voltage drop U_{PC} on the power contact marked in yellow (between KL3228 and KL9187).

The KL3228 drives a current through the sensor S1.
This current similarly flows back to the KL3228 via the power contact marked in yellow.
The voltage drop U_{PC} thus causes a measuring error during the resistance measurement by the KL3228.

Example for good positioning

This example shows the KL3228/KL9187 mounted on the right in the Bus Terminal Block. No further current consumers are mounted to the right of KL3228/KL9187.

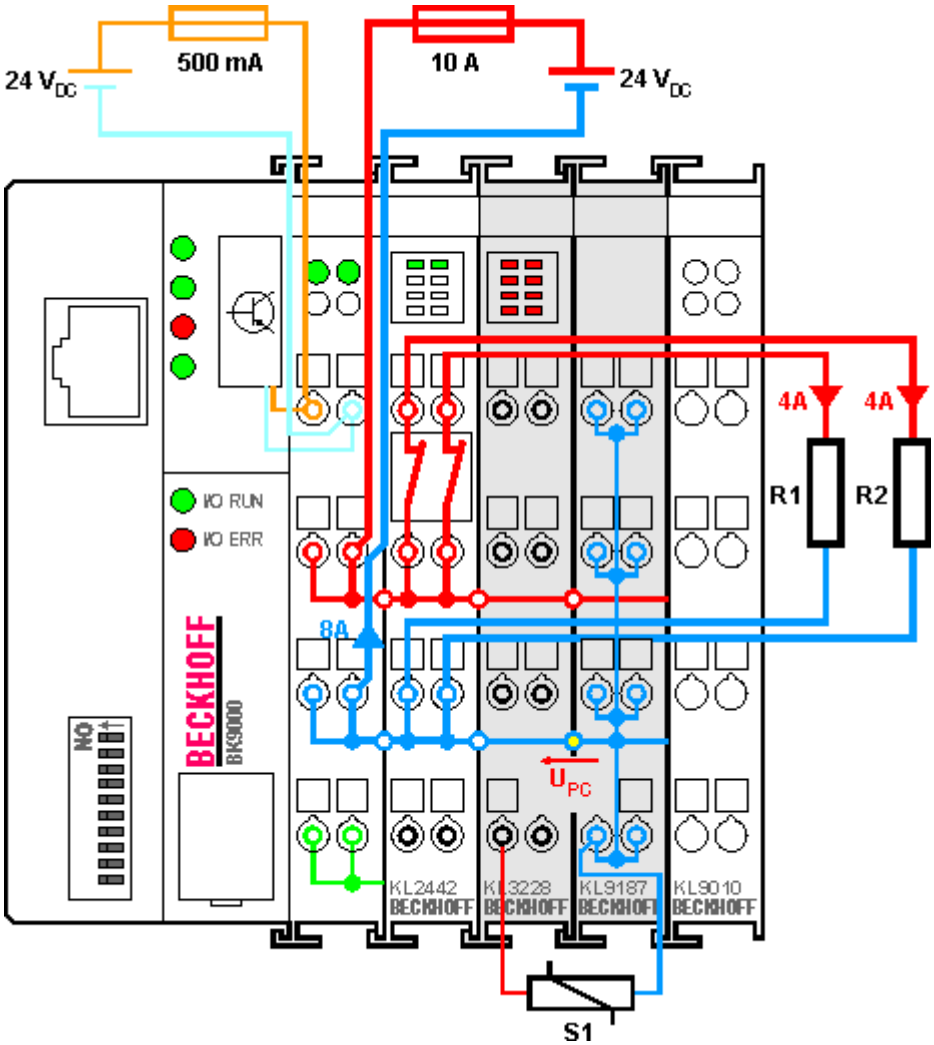

Fig. 15: KL3228/KL9187 - Example for good positioning

The current from the load resistors R1 and R2 does not flow back via the power contact marked in yellow (between KL3228 and KL9187).
The voltage drop U_{PC} at this power contact can thus be neglected.
No additional measuring error occurs during the resistance measurement by the KL3228.

3.8 ATEX - Special conditions (standard temperature range)

⚠ WARNING

Observe the special conditions for the intended use of Beckhoff fieldbus components with standard temperature range in potentially explosive areas (directive 2014/34/EU)!

- The certified components are to be installed in a suitable housing that guarantees a protection class of at least IP54 in accordance with EN 60079-15! The environmental conditions during use are thereby to be taken into account!
- If the temperatures during rated operation are higher than 70°C at the feed-in points of cables, lines or pipes, or higher than 80°C at the wire branching points, then cables must be selected whose temperature data correspond to the actual measured temperature values!
- Observe the permissible ambient temperature range of 0 to 55°C for the use of Beckhoff fieldbus components standard temperature range in potentially explosive areas!
- Measures must be taken to protect against the rated operating voltage being exceeded by more than 40% due to short-term interference voltages!
- The individual terminals may only be unplugged or removed from the Bus Terminal system if the supply voltage has been switched off or if a non-explosive atmosphere is ensured!
- The connections of the certified components may only be connected or disconnected if the supply voltage has been switched off or if a non-explosive atmosphere is ensured!
- The fuses of the KL92xx/EL92xx power feed terminals may only be exchanged if the supply voltage has been switched off or if a non-explosive atmosphere is ensured!
- Address selectors and ID switches may only be adjusted if the supply voltage has been switched off or if a non-explosive atmosphere is ensured!

Standards

The fundamental health and safety requirements are fulfilled by compliance with the following standards:

- EN 60079-0:2012+A11:2013
- EN 60079-15:2010

Marking

The Beckhoff fieldbus components with standard temperature range certified according to the ATEX directive for potentially explosive areas bear one of the following markings:

II 3G KEMA 10ATEX0075 X Ex nA IIC T4 Gc Ta: 0 … +55°C

or

II 3G KEMA 10ATEX0075 X Ex nC IIC T4 Gc Ta: 0 … +55°C

3.9 ATEX - Special conditions (extended temperature range)

⚠ WARNING

Observe the special conditions for the intended use of Beckhoff fieldbus components with extended temperature range (ET) in potentially explosive areas (directive 2014/34/EU)!

- The certified components are to be installed in a suitable housing that guarantees a protection class of at least IP54 in accordance with EN 60079-15! The environmental conditions during use are thereby to be taken into account!
- If the temperatures during rated operation are higher than 70°C at the feed-in points of cables, lines or pipes, or higher than 80°C at the wire branching points, then cables must be selected whose temperature data correspond to the actual measured temperature values!
- Observe the permissible ambient temperature range of -25 to 60°C for the use of Beckhoff fieldbus components with extended temperature range (ET) in potentially explosive areas!
- Measures must be taken to protect against the rated operating voltage being exceeded by more than 40% due to short-term interference voltages!
- The individual terminals may only be unplugged or removed from the Bus Terminal system if the supply voltage has been switched off or if a non-explosive atmosphere is ensured!
- The connections of the certified components may only be connected or disconnected if the supply voltage has been switched off or if a non-explosive atmosphere is ensured!
- The fuses of the KL92xx/EL92xx power feed terminals may only be exchanged if the supply voltage has been switched off or if a non-explosive atmosphere is ensured!
- Address selectors and ID switches may only be adjusted if the supply voltage has been switched off or if a non-explosive atmosphere is ensured!

Standards

The fundamental health and safety requirements are fulfilled by compliance with the following standards:

- EN 60079-0:2012+A11:2013
- EN 60079-15:2010

Marking

The Beckhoff fieldbus components with extended temperature range (ET) certified according to the ATEX directive for potentially explosive areas bear the following marking:

II 3G KEMA 10ATEX0075 X Ex nA IIC T4 Gc Ta: -25 … +60°C

or

II 3G KEMA 10ATEX0075 X Ex nC IIC T4 Gc Ta: -25 … +60°C

3.10 ATEX Documentation

Notes about operation of the Beckhoff terminal systems in potentially explosive areas (ATEX)

Pay also attention to the continuative documentation

Notes about operation of the Beckhoff terminal systems in potentially explosive areas (ATEX)

that is available in the download area of the Beckhoff homepage http:\\www.beckhoff.com!

4 Configuration Software KS2000

4.1 KS2000 - Introduction

The KS2000 configuration software permits configuration, commissioning and parameterization of bus couplers, of the affiliated bus terminals and of Fieldbus Box Modules. The connection between bus coupler / Fieldbus Box Module and the PC is established by means of the serial configuration cable or the fieldbus.

Fig. 16: KS2000 configuration software

Configuration

You can configure the Fieldbus stations with the Configuration Software KS2000 offline. That means, setting up a terminal station with all settings on the couplers and terminals resp. the Fieldbus Box Modules can be prepared before the commissioning phase. Later on, this configuration can be transferred to the terminal station in the commissioning phase by means of a download. For documentation purposes, you are provided with the breakdown of the terminal station, a parts list of modules used and a list of the parameters you have modified. After an upload, existing fieldbus stations are at your disposal for further editing.

Parameterization

KS2000 offers simple access to the parameters of a fieldbus station: specific high-level dialogs are available for all bus couplers, all intelligent bus terminals and Fieldbus Box modules with the aid of which settings can be modified easily. Alternatively, you have full access to all internal registers of the bus couplers and intelligent terminals. Refer to the register description for the meanings of the registers.

Commissioning

The KS2000 software facilitates commissioning of machine components or their fieldbus stations: Configured settings can be transferred to the fieldbus modules by means of a download. After a *login* to the terminal station, it is possible to define settings in couplers, terminals and Fieldbus Box modules directly *online*. The same high-level dialogs and register access are available for this purpose as in the configuration phase.

The KS2000 offers access to the process images of the bus couplers and Fieldbus Box modules.

- Thus, the coupler's input and output images can be observed by monitoring.
- Process values can be specified in the output image for commissioning of the output modules.

All possibilities in the *online mode* can be used in parallel with the actual fieldbus mode of the terminal station. The fieldbus protocol always has the higher priority in this case.

4.2 Parameterization with KS2000

Connect the configuration interface of your fieldbus coupler with the serial interface of your PC via the configuration cable and start the *KS2000* Configuration Software.

Click on the *Login* button. The configuration software will now load the information for the connected fieldbus station.
In the example shown, this is:

- a BK9000 Ethernet coupler
- a KL1xx2 digital input terminal
- a KL3228
- a KL9010 bus end terminal

Display of the KL3228 in KS2000

The KL3228 eight-channel analog terminal is displayed by the KS2000 Configuration Software as two four-channel analog terminals.
However, you can parameterize the eight channels in the usual way.

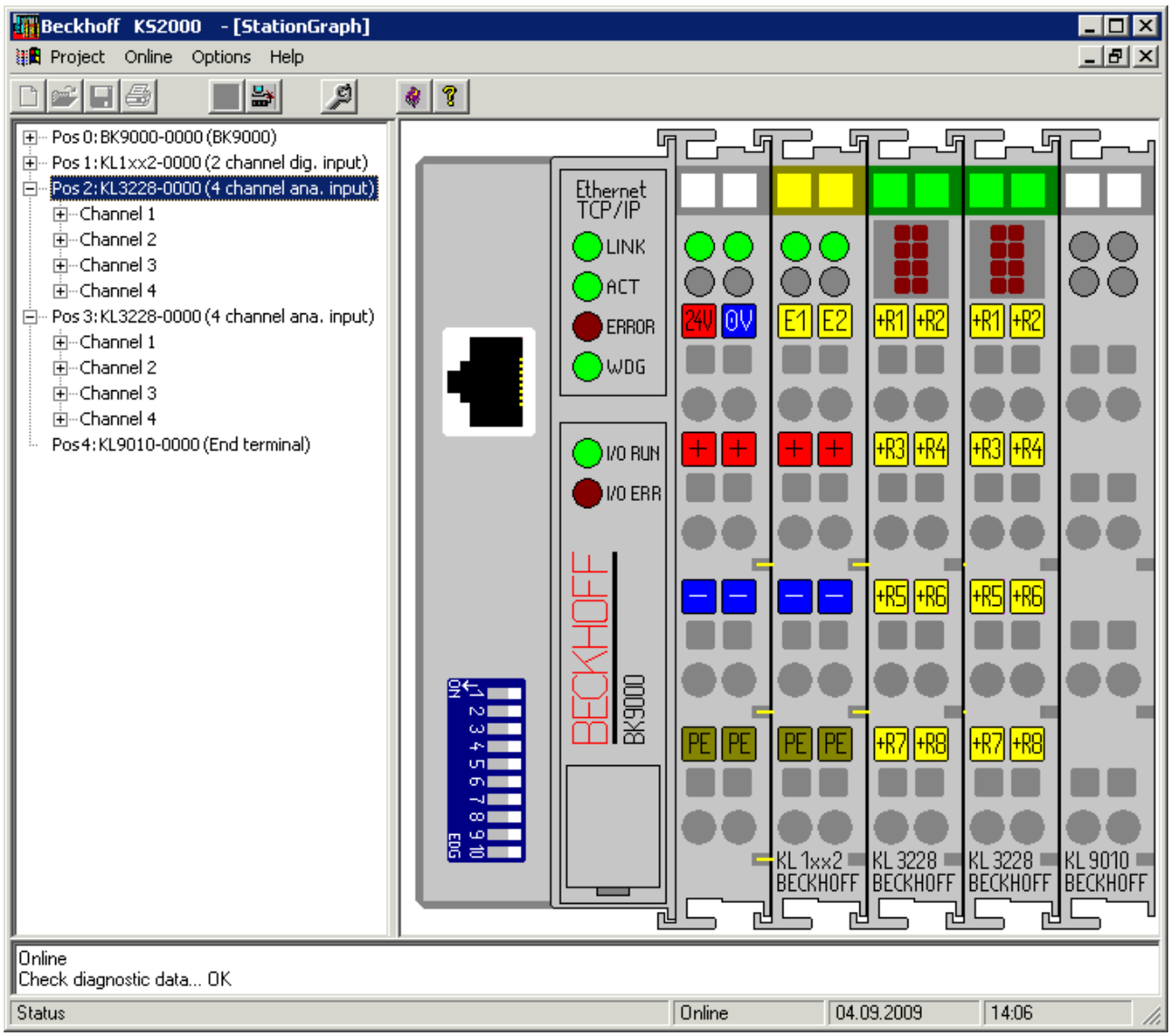

Fig. 17: Display of the fieldbus station in KS2000

The left-hand KS2000 window displays the terminals of the fieldbus station in a tree structure.
The right-hand KS2000 window contains a graphic display of the fieldbus station terminals.

In the tree structure of the left-hand window, click on the plus-sign next to the terminal whose parameters you wish to change (item 2 in the example).

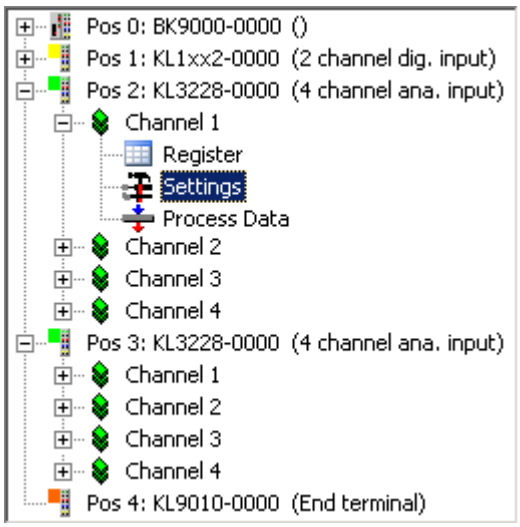

Fig. 18: KS2000 tree branch for KL3228-0000

For the KL3214, the branches *Register*, *Settings* and *ProcData* are displayed:

- Register enables direct access to the KL3228 registers.
- A dialog mask for the parameterization of the KL3228 can be found under Settings [▶ 34].
- ProcData displays the KL3228 process data.

4.3 Settings for KL3208-0010

The dialog mask for the parameterization of the KL3208-0010 can be found under *Settings*.

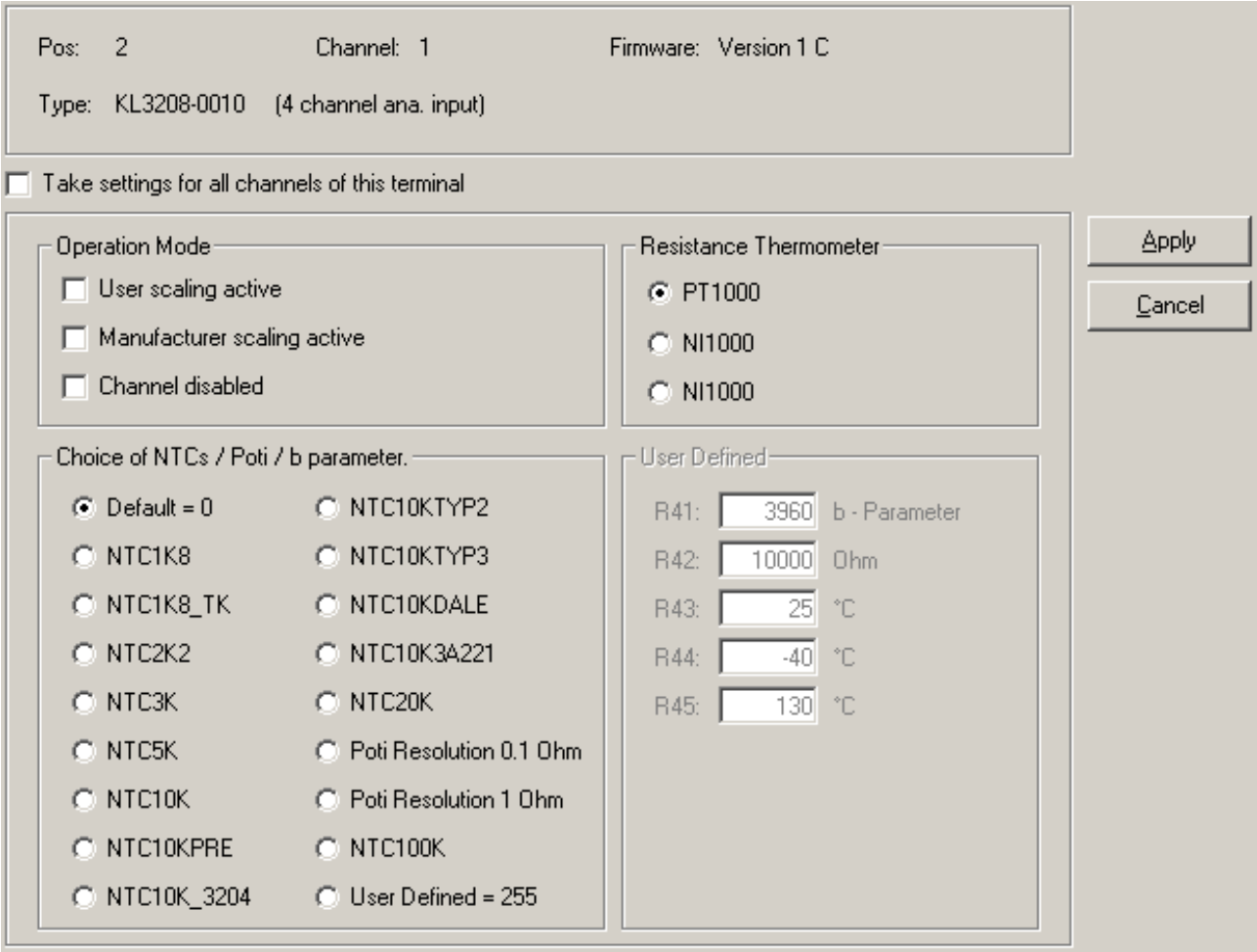

Fig. 19: KL3208-0010 - *Settings* dialog

Operation mode

Here you can activate

- activate the user scaling (enUsrScale, R32.0 [▶ 42]) and
- the manufacturer scaling (enManScale, R32.1 [▶ 42]), or
- disable the channel completely (disChannel, R32.11 [▶ 42]).

Resistance thermometer (sensor type)

Here you can set the KL3208-0010 to the connected sensor type (R32.15-R32.13 [▶ 42]):

- PT1000
- NI1000 with standard characteristic curve
- NI1000 with Landis&Staefa characteristic curve (1500 Ω = 100 °C)

Choice of NTCs / Poti / b parameter

Here you can set the KL3208-0010 to NTCs, potentiometers, etc. (R39 [▶ 44]).

User Defined

If user-defined NTC (255_{dec}, see Register R39 [▶ 44]) was selected, you can enter its parameters here.

4.4 Settings for KL3228-0000

The dialog mask for the parameterization of the KL3228-0000 can be found under *Settings*.

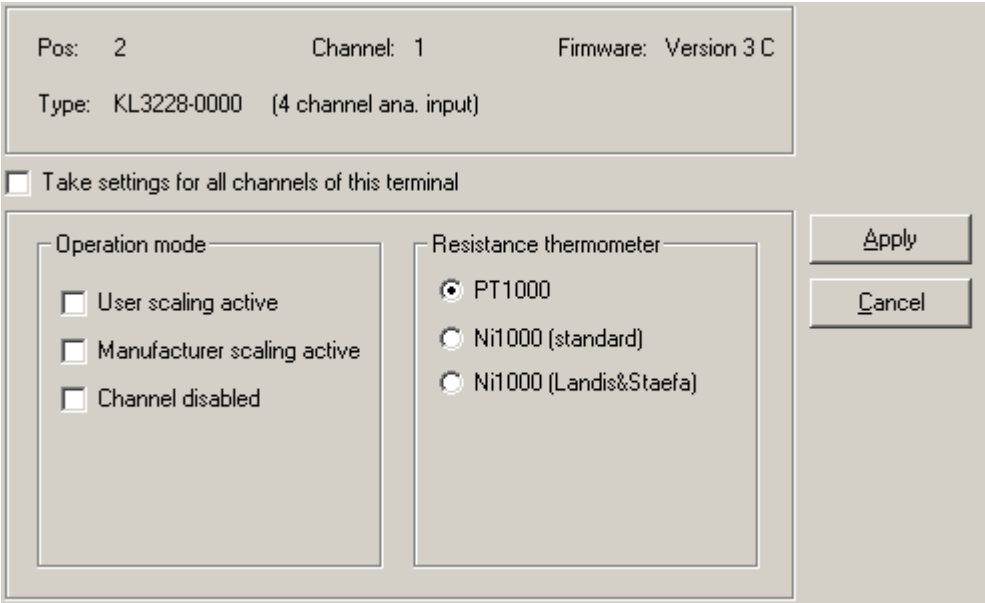

Fig. 20: KL3228 - *Settings* dialog

Operation mode

Here you can

- activate the user scaling (enUsrScale, R32.0 [▶ 42]) and
- the manufacturer scaling (enManScale, R32.1 [▶ 42]), or
- disable the channel completely (disChannel, R32.11 [▶ 42]).

Resistance thermometer (sensor type)

Here you can set the KL3228-0000 to the connected sensor type (R32.15-R32.13 [▶ 42]):

- PT1000
- NI1000 with standard characteristic curve
- NI1000 with Landis&Staefa characteristic curve (1500 Ω = 100 °C)

4.5 Sample program for KL register communication via EtherCAT on KL3314 exemplary

Using the sample programs

This document contains sample applications of our products for certain areas of application. The application notes provided here are based on typical features of our products and only serve as examples. The notes contained in this document explicitly do not refer to specific applications. The customer is therefore responsible for assessing and deciding whether the product is suitable for a particular application. We accept no responsibility for the completeness and correctness of the source code contained in this document. We reserve the right to modify the content of this document at any time and accept no responsibility for errors and missing information.

Program description / function

This example program (TwinCAT 3) provides change of single register values of the KL3314 as selection of the element type, characteristical settings of the feature register R32 and user scaling offset and gain (R33/ R34) similar as per KS2000.

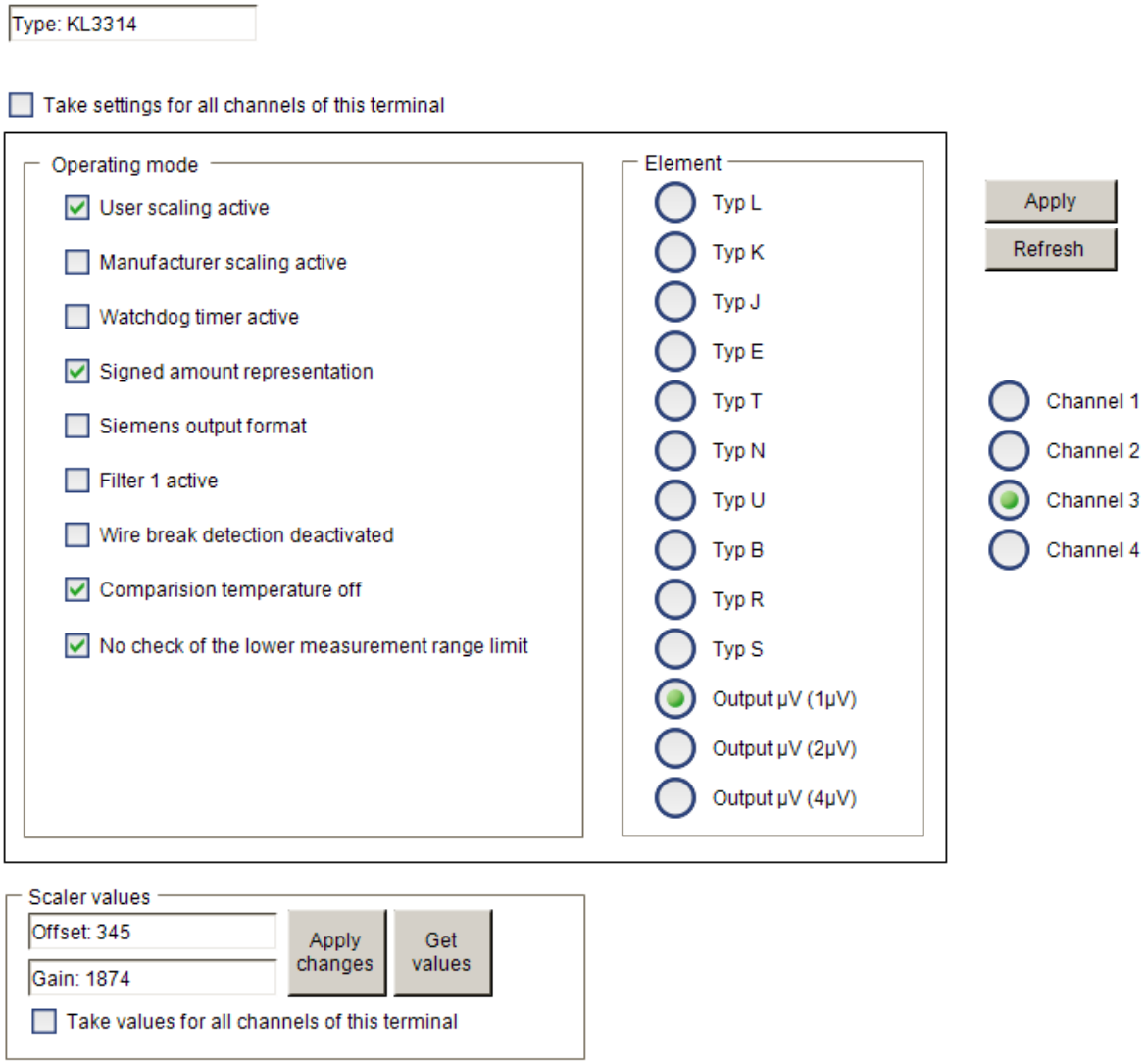

Fig. 21: Settings of KL3314 via visualisation of TwinCAT 3

At least following configuration setup shall be present:

[coupler (e.g. BK1120) or embedded PC] + KL3314 + KL9010.

Download:
https://infosys.beckhoff.com/content/1033/kl3208_kl3228/Resources/zip/5996114571.zip

Preparations for starting the sample programs (tnzip file / TwinCAT 3)

- Click on the download button to save the Zip archive locally on your hard disk, then unzip the *.tnzip archive file in a temporary folder.

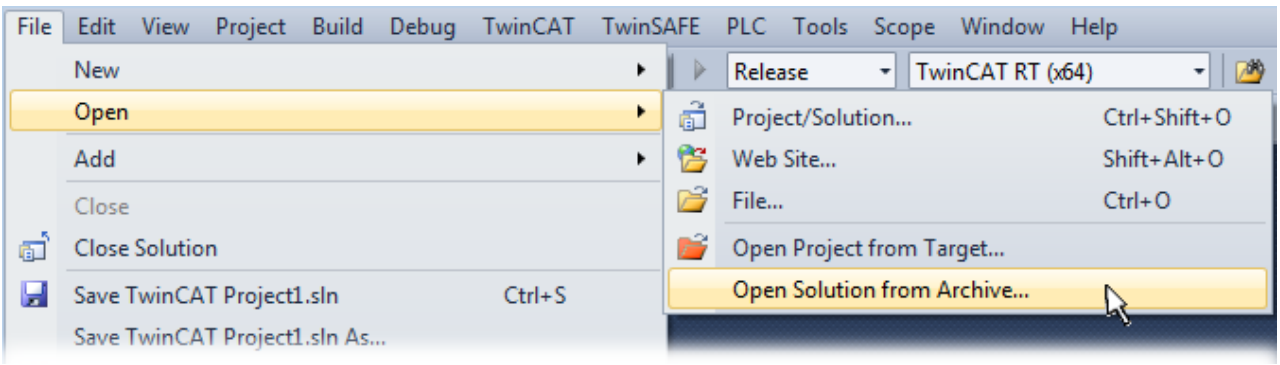

Fig. 22: Opening the *. tnzip archive

- Select the .tnzip file (sample program).
- A further selection window opens. Select the destination directory for storing the project.
- For a description of the general PLC commissioning procedure and starting the program please refer to the terminal documentation or the EtherCAT system documentation.
- The EtherCAT device of the example should usually be declared your present system. After selection of the EtherCAT device in the “Solutionexplorer” select the “Adapter” tab and click on “Search...”:

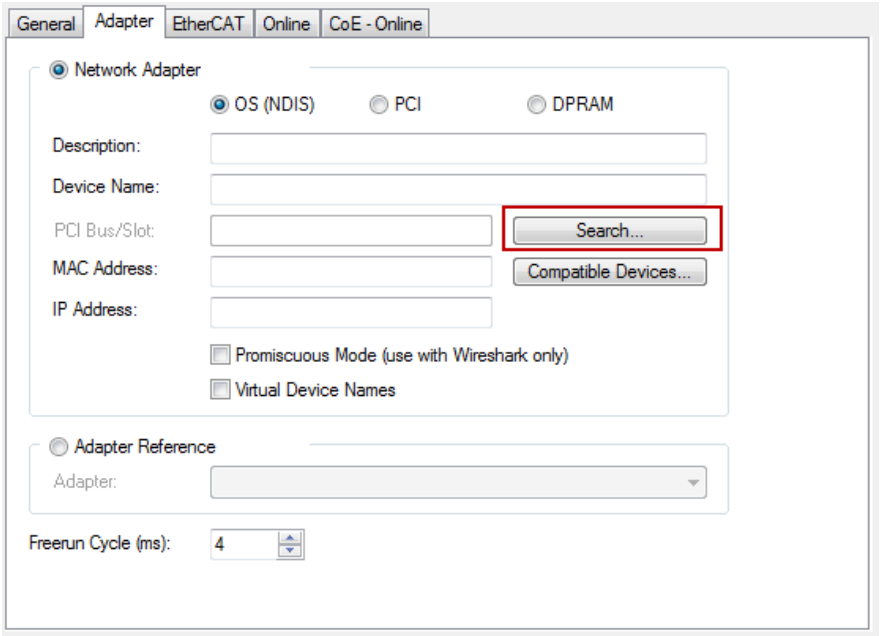

Fig. 23: Search of the existing HW configuration for the EtherCAT configuration of the example

- Checking NetId: the "EtherCAT" tab of the EtherCAT device shows the configured NetId:

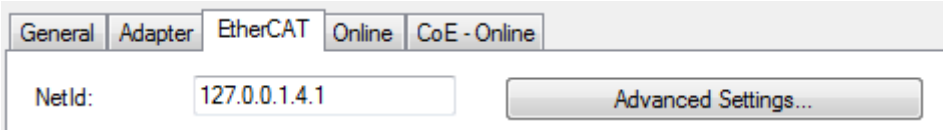

  The first 4 numbers have to be identical with the project NetId of the target system. The project NetId can be viewed within the TwinCAT environment above, where a pull down menu can be opened to choose a target system (by clicking right in the text field). The number blocks are placed in brackets there next to each computer name of a target system.
- Modify the NetId: By right clicking on "EtherCAT device" within the solution explorer a context menu opens where "Change NetId..." have to be selected. The first 4 numbers of the NetId of the target computer have to be entered; the both last values are 4.1 usually.
  Example:
  - NetId of project: myComputer (123.45.67.89.1.1)
  - Entry via „Change NetId...“: 123.45.67.89.4.1

5 Access from the user program

5.1 Process image

The terminal is represented in the complex process image with 24 bytes of input data and 24 bytes of output data. These are organized as follows:

byte offset (without word alignment)	byte offset (with word alignment*)	format	input data	output data
0	0	Byte	SB1 [▶ 38]	CB1 [▶ 38]
1	2	Word	DataIN1	DataOUT1
3	4	Byte	SB2 [▶ 38]	CB2 [▶ 38]
4	6	Word	DataIN2	DataOUT2
6	8	Byte	SB3 [▶ 38]	CB3 [▶ 38]
7	10	Word	DataIN3	DataOUT3
9	12	Byte	SB4 [▶ 38]	CB4 [▶ 38]
10	14	Word	DataIN4	DataOUT4
12	16	Byte	SB5 [▶ 38]	CB5 [▶ 38]
13	18	Word	DataIN5	DataOUT5
15	20	Byte	SB6 [▶ 38]	CB6 [▶ 38]
16	22	Word	DataIN6	DataOUT6
18	24	Byte	SB7 [▶ 38]	CB7 [▶ 38]
19	26	Word	DataIN7	DataOUT7
21	28	Byte	SB8 [▶ 38]	CB8 [▶ 38]
22	30	Word	DataIN8	DataOUT8

The terminal is represented in the compact process image with 16 bytes of input data and no output data. These are organized as follows:

byte offset (without word alignment)	byte offset (with word alignment*)	format	input data	output data
0	0	Word	DataIN1	-
1	1	Word	DataIN2	-
2	2	Word	DataIN3	-
3	3	Word	DataIN4	-
4	4	Word	DataIN5	-
5	5	Word	DataIN6	-
6	6	Word	DataIN7	-
6	6	Word	DataIN8	-

*) Word alignment: The Bus Coupler places values on even byte addresses

Key

SB1 ... SB8:	status bytes of channels 1 to 8
CB1 ... CB8:	control bytes of channels 1 to 8
DataIN1 ... DataIN8:	input words of channels 1 to 8
DataOUT1 ... DataOUT8:	output data words of channels 1 to 8 (are used for register communication)

5.2 Control and status bytes

Channel 1

The control and status bytes (CB1 and SB1) for channel 1 in the process data mode [▶ 38] and for register communication [▶ 39] are described below.

Channels 2 to 8

The control and status bytes of channels 2 (CB2 and SB2) to 8 (CB8 and SB8) have the same structure as the control and status bytes of channel 1.

5.2.1 Process data mode

Control byte 1 (for process data mode)

Control byte 1 (CB1) is located in the output image [▶ 37], and is transmitted from the controller to the terminal.

Bit	CB1.7	CB1.6	CB1.5	CB1.4	CB1.3	CB1.2	CB1.1	CB1.0
Name	RegAccess	-	Cali	Gain	Offset	Clock	up	down

Key

Bit	Name	Description		
CB1.7	RegAccess	0_{bin}	Register communication off (process data mode)	
CB1.6	-	0_{bin}	reserved	
CB1.5	Cali	1_{bin}	Terminal compensation function is activated	A gain and offset calibration of the terminal can be carried out with the control byte in process data mode. The code word must be entered in register R31 so that the calibration can be carried out. The parameter will only be saved permanently once the code word is reset!
CB1.4	Gain	1_{bin}	Gain calibration	
CB1.3	Offset	1_{bin}	Offset calibration	
CB1.2	Clock	0_{bin}	slow clock	
		1_{bin}	fast clock	
CB1.1	up	1_{bin}	up	
CB1.0	down	1_{bin}	down	

Status byte 1 (for process data mode)

The status byte 1 (SB1) is located in the input image [▶ 37] and is transmitted from terminal to the controller.

Bit	SB1.7	SB1.6	SB1.5	SB1.4	SB1.3	SB1.2	SB1.1	SB1.0
Name	RegAccess	Error	-	-	-	-	Overrange	Underrange

Key

Bit	Name	Description	
SB1.7	RegAccess	0_{bin}	Acknowledgement for process data mode
SB1.6	Error	1_{bin}	General error bit
SB1.5 ... SB1.2	-	0_{bin}	reserved
SB1.1	Overrange	1_{bin}	Process data too large
SB1.0	Underrange	1_{bin}	Process data too small

5.2.2 Register communication

Control byte 1 (in register communication)

Control byte 1 (CB1) is located in the output image [▶ 37], and is transmitted from the controller to the terminal.

Bit	CB1.7	CB1.6	CB1.5	CB1.4	CB1.3	CB1.2	CB1.1	CB1.0
Name	RegAccess	R/W	Reg. no.					

Key

Bit	Name	Description	
CB1.7	RegAccess	1_{bin}	Register communication switched on
CB1.6	R/W	0_{bin}	Read access
		1_{bin}	Write access
CB1.5 to CB1.0	Reg. no.	Register number: Enter the number of the register [▶ 40] that you • want to read with input data word DataIn [▶ 37] or • want to write with output data word DataOut [▶ 37].	

Status byte 1 (in register communication)

The status byte 1 (SB1) is located in the input image [▶ 37] and is transmitted from terminal to the controller.

Bit	SB1.7	SB1.6	SB1.5	SB1.4	SB1.3	SB1.2	SB1.1	SB1.0
Name	RegAccess	R/W	Reg. no.					

Key

Bit	Name	Description	
SB1.7	RegAccess	1_{bin}	Acknowledgement for register access
SB1.6	R	0_{bin}	Read access
SB1.5 to SB1.0	Reg. no.	Number of the register that was read or written.	

5.3 Register overview

The registers are used for parameterizing the Bus Terminals and are once available for each channel. They can be read or written by means of register communication [▶ 45].

Register no.	Comment		Default value		R/W	Memory
R0 [▶ 41]	A/D converter, raw value		variable	variable	R	RAM
R1 [▶ 41]	A/D converter, raw value of the line		variable	variable	R	RAM
R2	reserved		0x0000	0_{dec}	R	RAM
...	...		...	...	...	-
R5	reserved		0x0000	0_{dec}	R	RAM
R6 [▶ 41]	Diagnostic register		0x0000	0_{dec}	R	RAM
R7 [▶ 41]	Command register (not used)		0x0000	0_{dec}	R/W	RAM
R8 [▶ 41]	Terminal type	KL3208-0010	0x0C88	3208_{dec}	R	ROM
		KL3228-0000	0x0C9C	3228_{dec}		
R9 [▶ 41]	Firmware version		e.g. 0x3141	e.g. 12609_{dec}	R	ROM
R10	Multiplex shift register		0x0218 / 0x0130	536_{dec} / 304_{dec}	R	ROM
R11	Signal channels		0x0218	536_{dec}	R	ROM
R12	minimum data length of a channel		0x0098	152_{dez}	R	ROM
R13	Data structure		0x0000	0_{dec}	R	ROM
R14	reserved		-	-	-	-
R15	Alignment register		variable	variable	R/W	RAM
R16 [▶ 41]	Hardware version number		e.g. 0x0000	e.g. 0_{dec}	R/W	SEEPROM
R17 [▶ 41]	Vendor calibration: Offset		specific	specific	R/W	SEEPROM
R18 [▶ 41]	Vendor calibration: Gain		specific	specific	R/W	SEEPROM
R19 [▶ 41]	Manufacturer scaling: Offset		0x0000	0_{dec}	R/W	SEEPROM
R20 [▶ 41]	Manufacturer scaling: Gain		0x0100	256_{dec}	R/W	SEEPROM
R21	Offset register two-wire connection method		specific	specific	R/W	SEEPROM
R22…R28	reserved		0x0000	0_{dec}	R/W	SEEPROM
R29	Terminal type - special identification	KL3208-0010	0x000A	0010_{dec}	R	ROM
		KL3228-0000	0x0000	0000_{dec}		
R30	reserved		0x0000	0_{dec}	R/W	SEEPROM
R31 [▶ 42]	Code word register		0x0000	0_{dec}	R/W	RAM
R32 [▶ 42]	Feature register	KL3208-0010	0x0020	32_{dec}	R/W	SEEPROM
		KL3228-0000	0x0000	0_{dec}		
R33 [▶ 42]	User scaling: Offset		0x0000	0_{dec}	R/W	SEEPROM
R34 [▶ 42]	User scaling: Gain		0x0100	256_{dec}	R/W	SEEPROM
R35…R36	...		...	...	-	-
R37 [▶ 42]	Filter constant of the A/D converter	KL3208-0010	0x0000	0_{dec}	R/W	SEEPROM
		KL3228-0000	0x0138	312_{dec}	R/W	SEEPROM
R38	reserved		0x0000	0_{dec}	R/W	SEEPROM
R39 [▶ 44]*	Further elements		0x0000	0_{dec}	R/W	SEEPROM
R40 [▶ 44]*	Conversion time for all channels		0x000A	10_{dec}	R/W	SEEPROM
R41 [▶ 44]*	B-parameter for user-defined NTC		0x0F78	3960_{dec}	R/W	SEEPROM
R42 [▶ 44]*	Resistance at 25 °C for user-defined NTC		0x03E8	1000_{dec}	R/W	SEEPROM
R43 [▶ 44]*	Reference temperature for user-defined NTC		0x0019	25_{dec}	R/W	SEEPROM
R44 [▶ 44]*	Lower range limit for user-defined NTC		0xFFD8	65496_{dec}	R/W	SEEPROM
R45 [▶ 44]*	Upper range limit for user-defined NTC		0x0082	130_{dez}	R/W	SEEPROM
R46…R63	reserved		0x0000	0_{dec}	R/W	SEEPROM

*) Supported only by KL3208-0010 from firmware version 1C and hardware version 01

5.4 Register description

The registers are used for parameterizing the Bus Terminals and are once available for each channel. They can be read or written by means of register communication [▶ 45].

Basic configuration is also possible via the PLC using the function blocks FB_KL3208Config (TwinCAT2, TwinCAT3) and FB_KL3228Config (TwinCAT2, TwinCAT3).

R0: A/D converter, raw value
Register R0 contains the raw value of the analog/digital converter. This is the unchanged analog value prior to any scaling.

R1: A/D converter, raw value of the line
Register R1 contains the raw value of the line resistance between +R1 – RL1 or between +R2 – RL2.

R6: Diagnostic register
The status byte SBn of Channel n is shown in the low byte of register R6.

R7: Command register
The command register of KL3228 is currently not used.

R8: Terminal description
The terminal identifier is contained in register R8:

- KL3208-0010: 0x0C88 (3208_{dec})
- KL3228-0000: 0x0C9C (3228_{dec})

R9: Firmware version
Register R9 contains the ASCII coding of the terminal's firmware version, e.g. **0x3141 = '1A'**. The **'0x31'** corresponds here to the ASCII character **'1'**, while the **'0x41'** represents the ASCII character **'A'**.
This value cannot be changed.

R12: Minimum data length of a channel
Bits 0 to 6 of the high-order byte specify the minimum number of output data in bits: $000.0000_{bin} = 0_{dec}$, hence 0 bytes.

Bits 0 to 6 of the low-order byte specify the minimum number of input data in bits: $001.1000_{bin} = 24_{dec}$, hence 3 bytes.
The fact that bit 7 is set indicates that the control and status byte are not mandatory for the terminal function and are not transferred in compact mode.

R16: Hardware version number
Register R16 contains the hardware version of the terminal.

R17: Vendor calibration - offset
This register contains the offset of the vendor calibration.

R18: Vendor calibration - gain
This register contains the gain of the vendor calibration.

R19: Manufacturer scaling - offset:
This register contains the offset of the manufacturer scaling. It can be activated by R32.1 [▶ 42] in the feature register.

R20: Manufacturer scaling - gain:
This register contains the gain of the manufacturer scaling. It can be activated by R32.1 [▶ 42] in the feature register.

R21: Offset register for two-wire connection
The value of register 1 at short circuit +R1-RL1 or +R2-RL2

R23: Reference calibration value: Offset
This register contains the reference value of the calibration, which is determined during the vendor calibration.

R24: Reference calibration value: Gain
This register contains the reference value of the calibration, which is determined during the vendor calibration.

R31: Code word register

- If you write values into the user registers without first entering the user code word (0x1235) into the code word register, the terminal will not accept the supplied data.
- If you write values into the user registers and have previously entered the user code word (0x1235) in the code word register, these values are stored in the RAM registers and in the SEEPROM registers and are therefore retained if the terminal is restarted.

The code word is reset if the terminal is restarted.

R32: Feature register
The feature register specifies the terminal's operation mode.

Bit	R32.15	R32.14	R32.13	R32.12	R32.11	R32.10	R32.9	R32.8
Name	SensorType				disChannel	-	-	-

Bit	R32.7	R32.6	R32.5	R32.4	R32.3	R32.2	R32.1	R32.0
Name	-	-	Resolution	-	-	disWdTimer	enManScal	enUsrScal

Key

Bit	**Name**	**Description**		**default**
R32.15... R32.12	SensorType	0000_{bin}	PT1000	0_{bin}
		0001_{bin}	NI1000	
		0010_{bin}	RSNI1000 (note: different characteristic curve, similar to NI1000, but with 1000 Ω at 0 °C and 1500 Ω at 100 °C)	
R32.11	disChannel	0_{bin}	Channel switched on	0_{bin}
		1_{bin}	Channel switched off	
R32.10… R32.6	-	reserved		0_{bin}
R32.5	Resolution	R32.5=1: high resolution 1/100°C (default for KL3208-0010) R32.5=0: standard resolution 1/10°C		0/1
R32.3/4	-	reserved		0_{bin}
R32.2	DisWdTimer	Disable Watchdog Timer		0_{bin}
R32.1	enManScal	0_{bin}	Manufacturer scaling is not active	0_{bin}
		1_{bin}	Manufacturer scaling is active	
R32.0	enUsrScal	0_{bin}	User scaling is not active	0_{bin}
		1_{bin}	User scaling is active	

R33: User scaling - offset
This register contains the offset of the user scaling. User scaling can be activated in the feature register via bit R32.0 [▶ 42].

R34: User scaling - gain
This register contains the gain of the user scaling. User scaling can be activated in the feature register via bit R32.0 [▶ 42].

R37: Filter constant of the A/D converter

Value in R37	First Notch	Conversion time
0x0000	25 Hz	250 ms
0x0050	100 Hz	65 ms
0x00A0	50 Hz	125 ms
0x0140	25 Hz	250 ms
0x0280	12.5 Hz	500 ms

R39: Further elements

Register R39 is supported by KL3208-0010 from firmware version 1C and hardware version 01 (Default: 0_{dec})

Setting R39 increases the conversion time to one second per channel

As soon as register R39 is not equal to 0 for one channel of the terminal, the conversion time for all channels is increased to about 1 second per channel, automatically and irrespective of the sensor type, in order to optimize the measuring accuracy. The conversion time for all channels can be commonly set via register R40 of channel 1. A reduction is not recommended due to loss of accuracy.

Value in R39		Element	Measuring range	R at 25 °C	R at 0 °C
0x0032	50_{dec}	NCT1K8	-40°C ... 130°C	1.8 kΩ	4940 Ω
0x0033	51_{dec}	NCT1K8_TK	-30°C ... 150°C	1.8 kΩ	5200 Ω
0x0034	52_{dec}	NCT2K2	-50°C ... 130°C	2.2 kΩ	7373 Ω
0x0035	53_{dec}	NCT3K	-50°C ... 80°C	3.0 kΩ	9822 Ω
0x0036	54_{dec}	NCT5K	-40°C ... 100°C	5.0 kΩ	16325 Ω
0x0037	55_{dec}	NTC10K	-30°C ... 150°C	10 kΩ	32650 Ω
0x0038	56_{dec}	NTC10KPRE	-30°C ... 150°C	10 kΩ	29490 Ω
0x0039	57_{dec}	NTC10K_3204	-40°C ... 110°C	10 kΩ	27080 Ω
0x003A	58_{dec}	NTC10KTYP2	-50°C ... 130°C	10 kΩ	32770 Ω
0x003B	59_{dec}	NTC10KTYP3	-50°C ... 130°C	10 kΩ	29588 Ω
0x003C	60_{dec}	NTC10KDALE	-50°C ... 130°C	10 kΩ	32660 Ω
0x003D	61_{dec}	NTC10K3A221	-40°C ... 130°C	10 kΩ	32639 Ω
0x003E	62_{dec}	NTC20K	-20°C ... 150°C	20 kΩ	70200 Ω
0x0064	100_{dec}	Potentiometer, resolution 0.1 Ω	0 ... 5 kΩ	-	-
0x0065	101_{dec}	Potentiometer, resolution 1 Ω	0 ... 10 kΩ	-	-
0x00C8	200_{dec}	NTC100K	-40°C ... 130°C	100 kΩ	3266 kΩ
0x00FF	255_{dec}	user-defined NTC			

Avoid the mixed operation of low-resistance PT/NI sensors and high-resistance NTC sensors on one terminal

Due to large differences in the resistances of the sensor types, the mixed operation of low-resistance PT/NI sensors and high-resistance NTC sensors on one terminal should be avoided, since larger measuring errors can then occur for the PT/NI sensors.

R40: Conversion time for all channels
You can specify the conversion time for all channels of the terminal with register R40 of the first channel (default: 10_{dec}, approx. equal to 120 ms per channel).

R41: B-parameter for user-defined NTC
This register contains the B-parameter of a user-defined NTC (default: 3960_{dec} = 0x0F78).
The user-defined NTC can be activated by setting register R39 to 255_{dec}.

R42: Resistance at 25 °C for user-defined NTC
The resistance is specified in 10 Ω / digit. 1000_{dec} is thus equal to 10 kΩ
(Default: 1000_{dec} = 0x03E8).

R43: Reference temperature for user-defined NTC
(Default: 25 °C = 0x0019)

R44: Lower range limit for user-defined NTC
(Default: -40 °C = 0xFFD8)

R45: Upper range limit for user-defined NTC
(Default: 130 °C = 0x0082)

5.5 Examples of Register Communication

The numbering of the bytes in the examples corresponds to the display without word alignment.

5.5.1 Example 1: reading the firmware version from Register 9

Output Data

Byte 0: Control byte	Byte 1: DataOUT1, high byte	Byte 2: DataOUT1, low byte
0x89 (1000 1001_{bin})	0xXX	0xXX

Explanation:

- Bit 0.7 set means: Register communication switched on.
- Bit 0.6 not set means: reading the register.
- Bits 0.5 to 0.0 specify the register number 9 with 00 1001_{bin}.
- The output data word (byte 1 and byte 2) has no meaning during read access. To change a register, write the required value into the output word.

Input Data (answer of the bus terminal)

Byte 0: Status byte	Byte 1: DataIN1, high byte	Byte 2: DataIN1, low byte
0x89	0x33	0x41

Explanation:

- The terminal returns the value of the control byte as a receipt in the status byte.
- The terminal returns the firmware version 0x3341 in the input data word (byte 1 and byte 2). This is to be interpreted as an ASCII code:
  - ASCII code 0x33 represents the digit 3
  - ASCII code 0x41 represents the letter A
    The firmware version is thus 3A.

5.5.2 Example 2: Writing to an user register

Code word

In normal mode all user registers are read-only with the exception of Register 31. In order to deactivate this write protection you must write the code word (0x1235) into Register 31. If a value other than 0x1235 is written into Register 31, write protection is reactivated. Please note that changes to a register only become effective after restarting the terminal (power-off/power-on).

I. Write the code word (0x1235) into Register 31.

Output Data

Byte 0: Control byte	Byte 1: DataOUT1, high byte	Byte 2: DataOUT1, low byte
0xDF (1101 1111_{bin})	0x12	0x35

Explanation:

- Bit 0.7 set means: Register communication switched on.
- Bit 0.6 set means: writing to the register.
- Bits 0.5 to 0.0 specify the register number 31 with 01 1111_{bin}.
- The output data word (byte 1 and byte 2) contains the code word (0x1235) for deactivating write protection.

Input Data (answer of the bus terminal)

Byte 0: Status byte	Byte 1: DataIN1, high byte	Byte 2: DataIN1, low byte
0x9F (1001 1111_{bin})	0xXX	0xXX

Explanation:

- The terminal returns a value as a receipt in the status byte that differs only in bit 0.6 from the value of the control byte.
- The input data word (byte 1 and byte 2) is of no importance after the write access. Any values still displayed are invalid!

II. Read Register 31 (check the set code word)

Output Data

Byte 0: Control byte	Byte 1: DataOUT1, high byte	Byte 2: DataOUT1, low byte
0x9F (1001 1111_{bin})	0xXX	0xXX

Explanation:

- Bit 0.7 set means: Register communication switched on.
- Bit 0.6 not set means: reading the register.
- Bits 0.5 to 0.0 specify the register number 31 with 01 1111_{bin}.
- The output data word (byte 1 and byte 2) has no meaning during read access.

Input Data (answer of the bus terminal)

Byte 0: Status byte	Byte 1: DataIN1, high byte	Byte 2: DataIN1, low byte
0x9F (1001 1111_{bin})	0x12	0x35

Explanation:

- The terminal returns the value of the control byte as a receipt in the status byte.
- The terminal returns the current value of the code word register in the input data word (byte 1 and byte 2).

III. Write to Register 32 (change contents of the feature register)

Output data

Byte 0: Control byte	Byte 1: DataIN1, high byte	Byte 2: DataIN1, low byte
0xE0 (1110 0000_{bin})	0x00	0x02

Explanation:

- Bit 0.7 set means: Register communication switched on.
- Bit 0.6 set means: writing to the register.
- Bits 0.5 to 0.0 indicate register number 32 with 10 0000_{bin}.
- The output data word (byte 1 and byte 2) contains the new value for the feature register.

⚠ CAUTION

Observe the register description!

The value of 0x0002 given here is just an example!
The bits of the feature register change the properties of the terminal and have a different meaning, depending on the type of terminal. Refer to the description of the feature register of your terminal (chapter *Register description*) regarding the meaning of the individual bits before changing the values.

Input data (response from the Bus Terminal)

Byte 0: Status byte	Byte 1: DataIN1, high byte	Byte 2: DataIN1, low byte
0xA0 (1010 0000_{bin})	0xXX	0xXX

Explanation:

- The terminal returns a value as a receipt in the status byte that differs only in bit 0.6 from the value of the control byte.
- The input data word (byte 1 and byte 2) is of no importance after the write access. Any values still displayed are invalid!

IV. Read Register 32 (check changed feature register)

Output Data

Byte 0: Control byte	Byte 1: DataOUT1, high byte	Byte 2: DataOUT1, low byte
0xA0 (1010 0000_{bin})	0xXX	0xXX

Explanation:

- Bit 0.7 set means: Register communication switched on.
- Bit 0.6 not set means: reading the register.
- Bits 0.5 to 0.0 indicate register number 32 with 10 0000_{bin}.
- The output data word (byte 1 and byte 2) has no meaning during read access.

Input Data (answer of the bus terminal)

Byte 0: Status byte	Byte 1: DataIN1, high byte	Byte 2: DataIN1, low byte
0xA0 (1010 0000_{bin})	0x00	0x02

Explanation:

- The terminal returns the value of the control byte as a receipt in the status byte.
- The terminal returns the current value of the feature register in the input data word (byte 1 and byte 2).

V. Write Register 31 (reset code word)

Output Data

Byte 0: Control byte	Byte 1: DataOUT1, high byte	Byte 2: DataOUT1, low byte
0xDF (1101 1111_{bin})	0x00	0x00

Explanation:

- Bit 0.7 set means: Register communication switched on.
- Bit 0.6 set means: writing to the register.
- Bits 0.5 to 0.0 specify the register number 31 with 01 1111_{bin}.
- The output data word (byte 1 and byte 2) contains 0x0000 for reactivating write protection.

Input Data (answer of the bus terminal)

Byte 0: Status byte	Byte 1: DataIN1, high byte	Byte 2: DataIN1, low byte
0x9F (1001 1111_{bin})	0xXX	0xXX

Explanation:

- The terminal returns a value as a receipt in the status byte that differs only in bit 0.6 from the value of the control byte.

- The input data word (byte 1 and byte 2) is of no importance after the write access. Any values still displayed are invalid!

6 TwinCAT

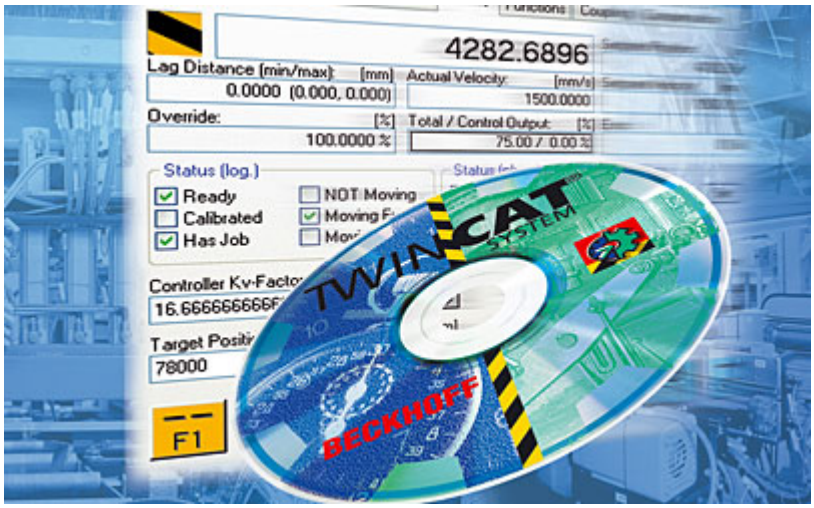

PLC and Motion Control on the PC

TwinCAT - **T**he **Win**dows **C**ontrol and **A**utomation **T**echnology

The TwinCAT automation software converts any compatible PC into a real-time controller with multi-PLC, NC axis control, programming environment and operating station. TwinCAT replaces conventional PLC and NC controllers as well as operating devices:

- open, compatible PC hardware
- Embedding of IEC 61131-3 software PLC, software NC and software CNC in Windows NT/2000/XP, NT/XP Embedded, CE
- Programming and runtime systems optionally together on one PC or separated
- Connection to all common fieldbus systems
- PC interfaces are supported
- Data communication with user interfaces and other programs by means of open Microsoft standards (OPC, OCX, DLL, etc.)

TwinCAT architecture

TwinCAT consists of runtime systems for real-time execution of control programs and development environments for programming, diagnosis and configuration. Any Windows programs, for instance visualization programs or Office programs, can access TwinCAT data via Microsoft interfaces, or can execute commands.

A practically oriented software solution

TwinCAT offers a precise time-base in which programs are executed with the highest deterministic features, independently of other processor tasks. The real-time load on a PC is set with TwinCAT: This achieves a defined operating behavior. TwinCAT displays the system load for running programs. A loading threshold can be set, in order to assure a defined computing capacity for the operating programs and for Windows NT/2000/XP. If this threshold is exceeded, a system message is generated.

TwinCAT supports system diagnosis

The general use of hardware and software from the open PC world requires some checking: Unsuitable components can upset the PC system. Beckhoff integrates a handy display of the real-time jitter in order to provide administrators with a simple means of evaluating hardware and software. A system message during operation can draw attention to error states.

Start/stop behavior

Depending on the setting, TwinCAT is started and stopped manually or automatically. Since TwinCAT is integrated into Windows NT/2000/XP as a service, an operator is not needed to start the system: switching on is enough.

Restarting and data backup

When a program is started or restarted, TwinCAT loads programs and remanent data. To backup data, and to shut down Windows NT/2000/XP correctly, a UPS (uninterruptible power supply) is of great value.

TwinCAT and "Blue Screen"

The TwinCAT system can be configured such that real-time capability is maintained in the event of a BSOD (Blue-Screen-of-Death) operating system crash. Real-time tasks such as PLC and NC can thus continue to run and place the controlled process in a safe state. Ultimately, it is the decision of the programmer whether or not to utilize this feature, bearing in mind that data or programs may already have been destroyed by the BSOD.

World-wide connection through message routing - "remote" connection is inherent to the system

According to the requirement for operating resources, the TwinCAT software devices can be distributed: TwinCAT PLC programs can be executed on PCs and on Beckhoff Bus Terminal controllers. A "message router" manages and distributes all the messages, both in the system and via TCP/IP connections. PC systems can be connected to one another by TCP/IP; Bus Terminal controllers are connected via serial interfaces and fieldbus systems (EtherCAT, Lightbus, PROFIBUS DP, PROFINET, Interbus, CANopen, DeviceNet, RS232, RS485, Ethernet TCP/IP, Ethernet/IP).

World-wide access

Since standard TCP/IP services from Windows NT/2000/XP are used, this data exchange can take place worldwide. The system offers scalable communication capacity and timeout periods for the monitoring of communications. OPC provides a standardized means for accessing many different SCADA packets. The SOAP (Simple Object Access Protocol) enables a connection between two computers to be established by means of an internet connection via standard HTTP. A TwinCAT component is available for this purpose.

Beckhoff Information System

Further information on the TwinCAT automation software can be found in the Beckhoff Information System.

The setup for installing the Beckhoff Information System is available to you on the Beckhoff *Products & Solutions* DVD and on our website for download.

In addition, the online version of the Beckhoff Information System can be found at https://infosys.beckhoff.com.

6.1 Programming

TwinCAT libraries

See software documentation in the Beckhoff Information System.

TwinCAT 2: TwinCAT PLC Lib: I/O functions

TwinCAT 3: TwinCAT 3 PLC Lib: Tc2_IoFunctions

6.2 KL3208, KL3228 - Configuration with Function blocks

The function blocks FB_KL3208Config and FB_KL3208Config can be used to configure the KL3208 and KL3228 terminals. A more detailed description can be found in the Beckhoff Information System.

FB_KL3208Config:

TwinCAT2: TwinCAT PLC Lib: I/O functions/Bus Terminal configuration
TwinCAT3: TwinCAT 3 PLC Lib:Tc2_I/O functions/Function blocks/Bus Terminal configuration

FB_KL3228Config:

TwinCAT2: TwinCAT PLC Lib: I/O functions/Bus Terminal configuration
TwinCAT3: TwinCAT 3 PLC Lib:Tc2_I/O functions/Function blocks/Bus Terminal configuration

7 Appendix

7.1 Support and Service

Beckhoff and their partners around the world offer comprehensive support and service, making available fast and competent assistance with all questions related to Beckhoff products and system solutions.

Beckhoff's branch offices and representatives

Please contact your Beckhoff branch office or representative for local support and service on Beckhoff products!

The addresses of Beckhoff's branch offices and representatives round the world can be found on her internet pages:
http://www.beckhoff.com

You will also find further documentation for Beckhoff components there.

Castel Maggiore (BO) 40013
Via Lirone 60/i

e-mail: info@eurotecsrl.com
Tel: +39 051/6321595
Website: www.eurotecsrl.com

C.F.: 04103780377
P.I.: 01596581205