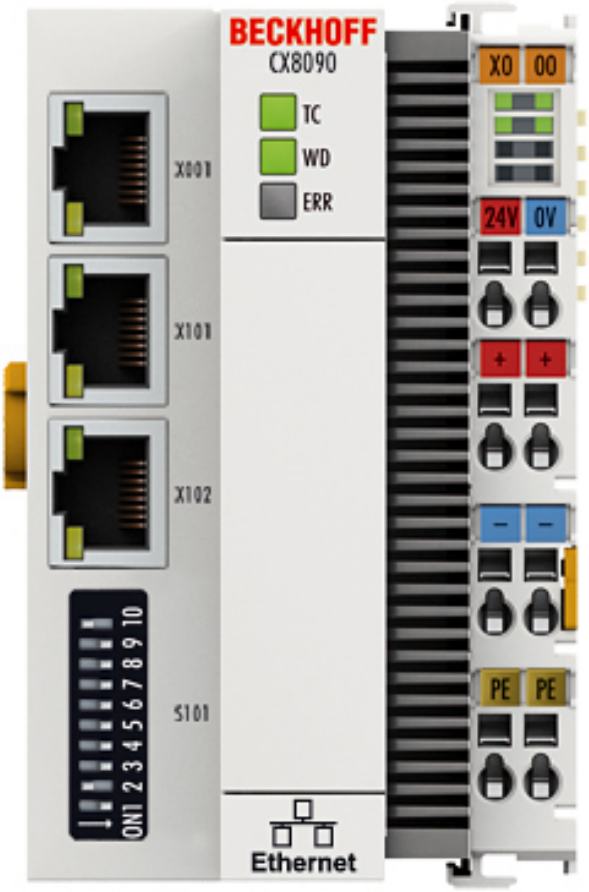

Documentation

CX8090

Embedded PC for Ethernet

EUROTEC
TECNOLOGIE IMPIANTISTICHE - AUTOMAZIONE - TELECONTROLLO

BECKHOFF

Table of contents

1 Notes on the documentation ... 5
1.1 Explanation of symbols ... 6
1.2 Documentation issue status ... 7

2 For your safety ... 8
2.1 Intended use ... 8
2.2 Staff qualification ... 9
2.3 Safety instructions ... 9

3 Transport and storage ... 11

4 Product overview ... 12
4.1 CX80xx - System overview ... 12
4.2 CX8090 - Introduction ... 14
4.3 Technical data ... 15
4.4 Technical data - Ethernet ... 16
4.5 CX80xx - MicroSD cards ... 17

5 Mounting and wiring ... 18
5.1 Mounting ... 18
5.1.1 Dimensions ... 18
5.1.2 Installation on mounting rails ... 18
5.2 Wiring ... 21
5.2.1 Power supply ... 21
5.2.2 Ethernet ... 23
5.3 Changing the battery ... 25

6 Parameterizing and commissioning ... 26
6.1 DIP switch ... 26
6.2 Setting the IP address ... 27
6.2.1 IP address ... 27
6.2.2 Setting the address via DHCP server ... 27
6.2.3 Subnet mask ... 27
6.3 Configuration ... 29
6.3.1 CCAT adaptor ... 29
6.3.2 CX80xx - Operating system ... 30
6.3.3 Power supply terminal ... 32
6.3.4 Realtime Ethernet ... 34
6.3.5 Web Services ... 36
6.3.6 Real Time Clock (RTC) ... 39
6.3.7 1-second UPS (Uninterruptible Power Supply) ... 40
6.3.8 CPU load ... 41

7 Programming ... 42
7.1 Library for CX80xx ... 42
7.2 Seconds UPS ... 42
7.2.1 Function blocks ... 42
7.2.2 Data types ... 45
7.3 CX8090 LED ... 46
7.3.1 Function ... 46
7.3.2 Data types ... 48
7.4 Diagnostics ... 48

7.4.1 FUNCTION F_CX80xx_ADDRESS ... 48

8 Ethernet X001 Interface ... 49

8.1 System introduction ... 49
8.1.1 Ethernet ... 49
8.1.2 Topology example ... 51
8.2 ModbusTCP ... 52
8.2.1 ModbusTCP Server - Overview ... 52
8.2.2 ModbusTCP Protocol ... 53
8.2.3 Mapping between Modbus and ADS ... 54
8.3 TCP/IP ... 56
8.4 Real-time Ethernet ... 57
8.5 ADS-Communication ... 57

9 Error handling and diagnosis ... 59

9.1 Diagnostic LEDs ... 59

10 Appendix ... 62

10.1 First steps ... 62
10.2 Image Update ... 67
10.3 Example of Web Visualization, IP address and fieldbus LEDs ... 69
10.4 Certification ... 70
10.4.1 Ex ... 70
10.4.2 FCC ... 71
10.4.3 UL ... 71
10.5 Support and Service ... 72

1 Notes on the documentation

This description is only intended for the use of trained specialists in control and automation engineering who are familiar with the applicable national standards.
It is essential that the documentation and the following notes and explanations are followed when installing and commissioning the components.
It is the duty of the technical personnel to use the documentation published at the respective time of each installation and commissioning.

The responsible staff must ensure that the application or use of the products described satisfy all the requirements for safety, including all the relevant laws, regulations, guidelines and standards.

Disclaimer

The documentation has been prepared with care. The products described are, however, constantly under development.
We reserve the right to revise and change the documentation at any time and without prior announcement.
No claims for the modification of products that have already been supplied may be made on the basis of the data, diagrams and descriptions in this documentation.

Trademarks

Beckhoff®, TwinCAT®, EtherCAT®, Safety over EtherCAT®, TwinSAFE®, XFC® and XTS® are registered trademarks of and licensed by Beckhoff Automation GmbH.
Other designations used in this publication may be trademarks whose use by third parties for their own purposes could violate the rights of the owners.

Patent Pending

The EtherCAT Technology is covered, including but not limited to the following patent applications and patents:
EP1590927, EP1789857, DE102004044764, DE102007017835
with corresponding applications or registrations in various other countries.

The TwinCAT Technology is covered, including but not limited to the following patent applications and patents:
EP0851348, US6167425 with corresponding applications or registrations in various other countries.

EtherCAT® is registered trademark and patented technology, licensed by Beckhoff Automation GmbH, Germany

Copyright

© Beckhoff Automation GmbH & Co. KG, Germany.
The reproduction, distribution and utilization of this document as well as the communication of its contents to others without express authorization are prohibited.
Offenders will be held liable for the payment of damages. All rights reserved in the event of the grant of a patent, utility model or design.

1.1 Explanation of symbols

The following symbols with corresponding warnings or explanatory text are used in the documentation. Read and follow the warnings.

Symbols that warn of personal injury:

DANGER	**Serious risk of injury** Note this warning. Hazard with high risk of death or serious injury.
WARNING	**Risk of injury** Note this warning. Hazard with medium risk of death or serious injury.
CAUTION	**Personal injuries** Note this warning. Hazard with a low degree of risk, which could lead to minor or moderate injury.

Symbols that warn of damage to property or equipment:

Attention	**Damage to the devices or environment** Note this warning. Risk of damage to the environment and equipment.

Symbols indicating further information or tips:

Note	**Tip or pointer** This symbol indicates information that contributes to better understanding.

1.2 Documentation issue status

Version	Comment
0.1	• Preliminary version
1.0	• First release
1.1	• Chapter *battery change* corrected
1.2	• Foreword updated • Chapter 1-second UPS added • Chapter *Operating System* added
1.3	• Chapter CCAT adaptor reworked
1.4	• Foreword reworked • Chapter „For your safety“ added • ATEX warnings added
1.5	• Chapter “Transport and storage“ added
1.6	• Chapter “FCC” added
1.7	• Warnings for Ex area revised • Chapter “IECEx” added

Image version CX8090

Firmware	Description
Build 2221	• First version

2 For your safety

Read the chapter on safety and follow the instructions in order to protect from personal injury and damage to equipment.

Limitation of liability

All the components are supplied in particular hardware and software configurations appropriate for the application. Unauthorized modifications and changes to the hardware or software configuration, which go beyond the documented options, are prohibited and nullify the liability of Beckhoff Automation GmbH & Co. KG.

In addition, the following actions are excluded from the liability of Beckhoff Automation GmbH & Co. KG:

- Failure to comply with this documentation.
- Improper use.
- Untrained personnel.
- Use of unauthorized replacement parts.

2.1 Intended use

The CX80xx Embedded PC is a control system designed for installation on a DIN rail in a control cabinet or terminal box.

The Embedded PC series is used in conjunction with Bus Terminals for recording digital or analog signals from sensors and transferring them to actuators or higher-level controllers.

The Embedded PC is designed for a working environment that meets the requirements of protection class IP20. This involves finger protection and protection against solid foreign objects up to 12.5 mm, but not protection against water. Operation of the devices in wet and dusty environments is not permitted, unless specified otherwise. The specified limits for electrical and technical data must be adhered to.

Potentially explosive atmospheres

The CX80xx Embedded PC is only suitable for the following potentially explosive atmospheres:

1. For Zone 2 atmospheres in which gas occurs as a combustible material. Zone 2 means that an explosive atmosphere does usually not occur during normal operation, or only for a short time.
2. For Zone 22 atmospheres in which dust occurs as a combustible material. Zone 22 means that an explosive atmosphere in the form of a cloud does usually not occur during normal operation, or only for a short time.

The Embedded PC must be installed in a housing, which ensures protection class IP 54 for gas according to EN 60079-15. A housing with protection class IP 54 is required for non-conductive dust. IP 6X is required for conductive dust according to EN 60079-31.

Improper use

The Embedded PC is not suitable for operation in the following areas:

- In potentially explosive atmospheres, the Embedded PC may not be used in other zones except for 2/22 and not without a suitable housing.
- Areas with an aggressive environment, e.g. aggressive gases or chemicals.
- Living areas. In living areas, the relevant standards and guidelines for interference emissions must be adhered to, and the devices must be installed in housings or control boxes with suitable attenuation of shielding.

2.2 Staff qualification

All operations involving Beckhoff software and hardware may only be carried out by qualified personnel with knowledge of control and automation engineering. The qualified personnel must have knowledge of the administration of the Embedded PC and the associated network.

All interventions must be carried out with knowledge of control programming, and the qualified personnel must be familiar with the current standards and guidelines for the automation environment.

2.3 Safety instructions

The following safety instructions must be followed during installation and working with networks and the software.

Explosion protection

CAUTION	**Danger of explosion** Gases or dusts can be ignited in potentially explosive areas. Read and follow the safety instructions to prevent deflagration or explosions.

The Embedded PC must be installed in a housing, which ensures protection class IP54 for gas according to EN 60079-15. A housing with protection class IP54 is required for non-conductive dust. IP6X is required for conductive dust according to EN 60079-31.

Observe the temperature at the cable entry points into the housing. If the temperature during nominal operation is higher than 70 °C at the entry points or higher than 80 °C at the wire branching points, cables must be selected that are designed for these high temperatures and operation in potentially explosive atmospheres.

Tighten the screws of the fieldbus plug connectors, in order to prevent the plug connectors slipping out. Only use RJ45 connectors with an intact latch.

Maintain the prescribed ambient temperature during operation. The permissible ambient temperature range during operation is 0 °C to +55 °C.

Take measures to prevent the rated operating voltage exceeding 119 V through short-term interference voltages.

Switch off the power supply and ensure that no explosive atmosphere occurs when:

- Bus Terminals are connected or removed,
- the Embedded PC is wired or cables are connected,
- DIP switches or ID switches are set,
- the front flap is opened,
- the MicroSD card or battery is replaced,
- the USB port behind the front flap is used.

Mounting

- Never work on live equipment. Always switch off the power supply for the device before installation, troubleshooting or maintenance. Protect the device against unintentional switching on.
- Observe the relevant accident prevention regulations for your machine (e.g. the BGV A 3, electrical systems and equipment).
- Ensure standard-compliant connection and avoid risks to personnel. Ensure that data and supply cables are laid in a standard-compliant manner and ensure correct pin assignment.
- Observe the relevant EMC guidelines for your application.
- Avoid polarity reversal of the data and supply cables, as this may cause damage to the equipment.

- The devices contain electronic components, which may be destroyed by electrostatic discharge when touched. Observe the safety precautions against electrostatic discharge according to DIN EN 61340-5-1/-3.

Working with networks

- Limit physical and electronic access to all devices to an authorized group of persons.
- Change the default passwords to reduce the risk of unauthorized access. Regularly change the passwords.
- Install the devices behind a firewall.
- Apply the IT security precautions according to IEC 62443, in order to limit access to and control of devices and networks.

Working with the software

- Use up-to-date security software. The safe function of the Embedded PC can be compromised by malicious software such as viruses or Trojans.
- The sensitivity of an Embedded PC against malicious software increases with the number of installed and active software.
- Uninstall or disable unnecessary software.

Further information about the safe handling of networks and software can be found in the Beckhoff Information System:
http://infosys.beckhoff.com

Document name
Documentation about IPC Security

3 Transport and storage

Transport

Attention	**Short circuit due to moisture** Moisture can form during transport in cold weather or in the event of large temperature fluctuations. Avoid moisture formation (condensation) in the Embedded PC, and leave it to adjust to room temperature slowly. If condensation has occurred, wait at least 12 hours before switching on the Embedded PC.

Despite the robust design of the unit, the components are sensitive to strong vibrations and impacts. During transport the Embedded PC must be protected from

- mechanical stress and
- use the original packaging.

Table 1: Weight and Dimensions.

	CX80xx
Weight	180 g
Dimensions (W x H x D)	64 mm x 100 mm x 73 mm

Storage

- The battery should be removed if the Embedded PC is stored at temperatures above 60 °C. The battery should be stored separate from the Embedded PC in a dry environment at a temperature between 0 °C and 30 °C.
  The preset date and time are lost if the battery is removed.
- Store the Embedded PC in the original packaging.

4 Product overview

4.1 CX80xx - System overview

CX80xx is a device family of programmable controllers with 32-bit ARM-based CPU, which can be used for processing of PLC programs or as slave devices for higher-level fieldbus systems. Unlike with the non-programmable EtherCAT couplers of the EK series, which only act as gateway between the associated fieldbus system and the connected EtherCAT terminals, the CX80xx is programmable and able to run its own control program.

The devices from the CX80xx series represent a further development of the well-known and proven 16-bit microcontroller-based Bus Terminal Controllers from the BC and BX series including more efficient 32-bit processors. As with the BC/BX, it is also ensured in the case of the CX80xx that the control and the local program continue to be executed in the case of interruption of the higher-level fieldbus system. The CX80xx devices can therefore be used as local controllers. Alternatively, Bus Terminals (K-bus) or EtherCAT Terminals (E-bus) can be connected; the CX80xx automatically recognizes which terminal system is connected during the start-up phase. The use of EtherCAT gives rise to further options, such as the realization of different topologies, the integration of further bus systems such as CANopen, PROFIBUS and PROFINET and – with the EtherCAT Box Modules – connection to the IP67 world.

Like all CX products, the CX80xx devices are programmed and commissioned via the Ethernet interface, which can, of course, also be used for connection of the control system with a regular network. Some of the Embedded PCs have further Ethernet interfaces with switch functions, so that a linear "daisy chain" topology can be constructed inexpensively, without additional hardware. The other connections on the lower plug level are fieldbus-specific. Under the cover at the upper housing level there is an exchangeable button cell for date and time, a set of DIP switches for setting function modes, a slot for Micro-SD Flash memory cards and a type B USB connection. Thanks to their low power consumption, the devices are fanless.

Microsoft Windows CE is used as the operating system. In the absence of a monitor port, the operating system and its "virtual" display can only be accessed via the network. As for all other Beckhoff devices, the TwinCAT software is used for system configuration and the programming of the PLC functionality. The CX80xx target device features a pre-installed TwinCAT PLC runtime environment. All software required for operating the device, including the operating system, the TwinCAT files and user files and data, is stored on the MicroSD Flash card. This simplifies exchange in the case of service. Commercial card readers can be used to access the card data. The size of the MicroSD Flash card (e.g. 512 MB) can be chosen depending on the application and the quantity of data to be stored.

The CX80xx device family features an integrated, capacitive 1-second UPS, which in the event of a failure of the supply voltage provides sufficient energy for saving persistent data. Important data are thus preserved in a non-volatile manner without battery backup.

With a high-performance but nevertheless energy-saving 32-bit ARM processor, EtherCAT as I/O bus and TwinCAT PLC with extensive PLC libraries, the Embedded Controllers from the CX80xx series represent high-performance and versatile controllers with slave fieldbus connection.

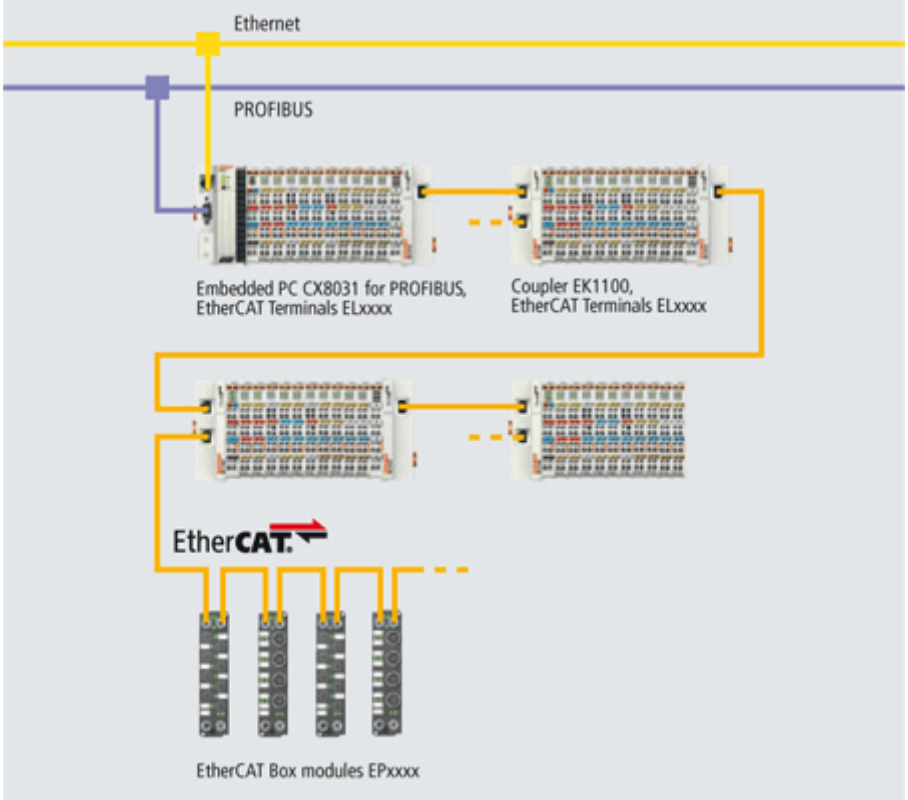

Fieldbus interface

The variants from the CX80xx series differ by their fieldbus interfaces. Various versions cover the most important fieldbus systems:

- CX8010: EtherCATSlave
- CX8030: PROFIBUS DP Master
  CX8031: PROFIBUS DP Slave
- CX8050: CAN Master
  CX8051: CANopen Slave
- CX8080: RS232/485
- CX8090: Ethernet (RT-Ethernet, EAP, ModbusTCP, TCP/IP, UDP/IP, Web Services)
- CX8091: BACnet IP/OPC UA
- CX8093: PROFINET RT Device (Slave)
- CX8095: Ethernet/IP Slave
- CX8097: Sercos III Slave

Programming

The CX80xx controller is programmed according to the high-performance IEC 61131-3 standard. As with all other Beckhoff controllers, the TwinCAT automation software is the basis for parameterization and programming. Users therefore have the familiar TwinCAT tools available, e.g. PLC programming interface, System Manager and TwinCAT Scope.

Configuration

The configuration is also carried out using TwinCAT. The fieldbus interface and the real-time clock can be configured and parameterized via the System Manager. The System Manager can read all connected devices and Bus Terminals. The configuration is stored on the CX after the parameterization. The configuration thus created can be accessed again later.

4.2 CX8090 - Introduction

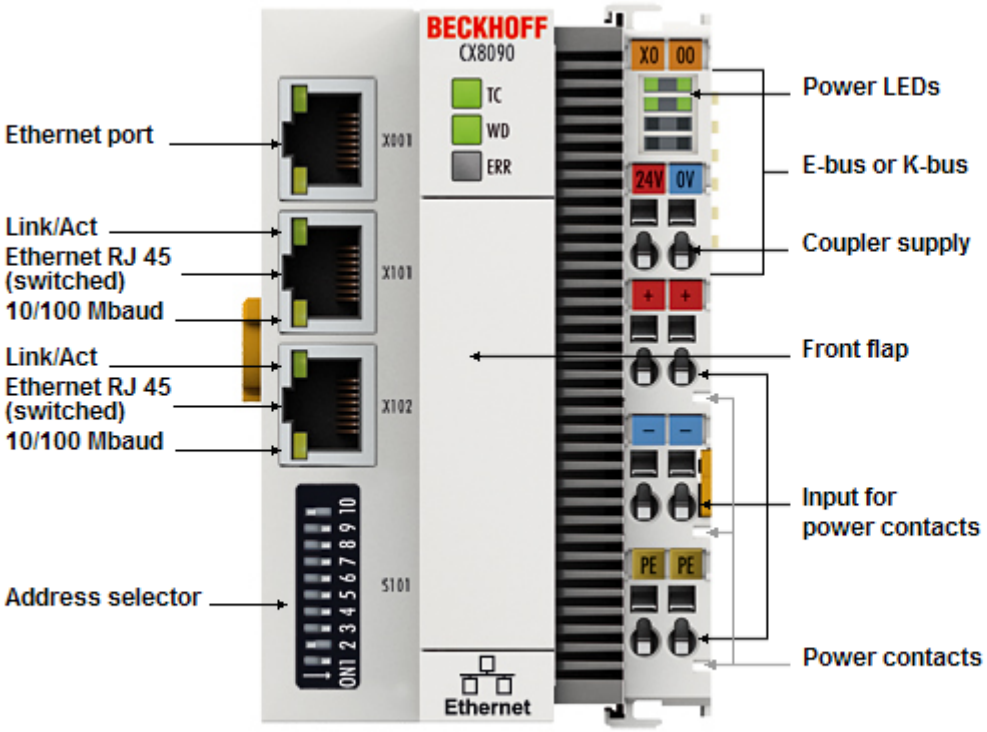

The CX8090 is a control system with a switched Ethernet port. It supports protocols such as real-time Ethernet, ADS UDP/TCP, Modbus TCP client/server or open TCP/IP-UDP/IP communication. K-Bus or E-Bus terminals can be attached as required; the CX8090 automatically recognizes the type of I/O system connected during the start-up phase. The control system is programmed with TwinCAT via the fieldbus interface or the additional Ethernet interface.

In the basic version the CX80xx contains a MicroSD card with 512 MB. Two Ethernet interfaces and a K-Bus respectively E-Bus interface belong to the basic version.

The shortest usable task time is 1 ms (for I/O data a task time from 1 to 50 ms is recommended, further tasks can also be set slower). For lower task times pay attention to the overall system load. If the task time is set to low web visualization and remote desktop may work very slowly or cause time outs. The customer is responsible on his own to project and configure his system in a way, that it will not be overloaded!

4.3 Technical data

Technical data	CX8090
Processor	32 bit, 400 MHz, ARM9
Internal main memory	64 MB RAM (internal, not extendable)
Operating system	Microsoft Windows CE 6.0
Web-based Management	yes
Flash memory	MicroSD card (ATP) 512 MB (optionally 1, 2, 4, 8 GB)
Interfaces	1 x USB device (behind the front panel) 1 x RJ45 Ethernet, 10/100 Mbit/s 2 x RJ45 switched, 100 Mbit/s
Protocols	Realtime-Ethernet, ADS, ModbusTCP, TCP/IP, UDP/IP
Interface for I/O terminals	K-bus or E-bus, automatic detection
Process data at K-Bus	max. 2 kByte input data max. 2 kByte output data
Diagnostics LED	1 x power, 1 x TC status, 2 x bus status
Clock	Internal clock with battery backup (RTC) for time and date (battery replaceable)
Operating system	Microsoft Windows CE
Control software	TwinCAT PLC runtime (from version 2.11 R3)
Programming	TwinCAT PLC
Programming languages	IEC 61131-3
Online Change	Yes
Up/download code	Yes/Yes
Power supply	24 V_{DC} (-15 %/+20 %)
UPS	1-second UPS
Power supply for I/O terminals (K-Bus or E-Bus)	2 A max.
Power contact current load	10 A max.
Max. power loss	3,0 W (including system interfaces)
Dielectric strength	500 V (supply / internal electronics)
Dimensions (W x H x D)	64 mm x 100 mm x 73 mm
Weight	approx. 180 g
Permissible ambient temperature during operation	0 °C to +55 °C
Permissible ambient temperature during storage	-25 °C to +85 °C see notes under: Transport and storage [▶ 11]
Installation position	See chapter Installation positions
Relative humidity	95 % no condensation
Vibration / shock resistance	conforms to EN 60068-2-6 / EN 60068-2-27
EMC immunity/emission	conforms to EN 61000-6-2 / EN 61000-6-4
Protection class	IP20

System data	Ethernet (CX8090)
Number of I/O modules	depending on controller
Number of I/O points	depending on controller
Transmission medium	4 x 2 twisted pair copper cable, category 5 (100 Mbaud), shielded
Cable length	100 m
Data transfer rate	100 MBaud
Topology	Star-form cabling, line topology

4.4 Technical data - Ethernet

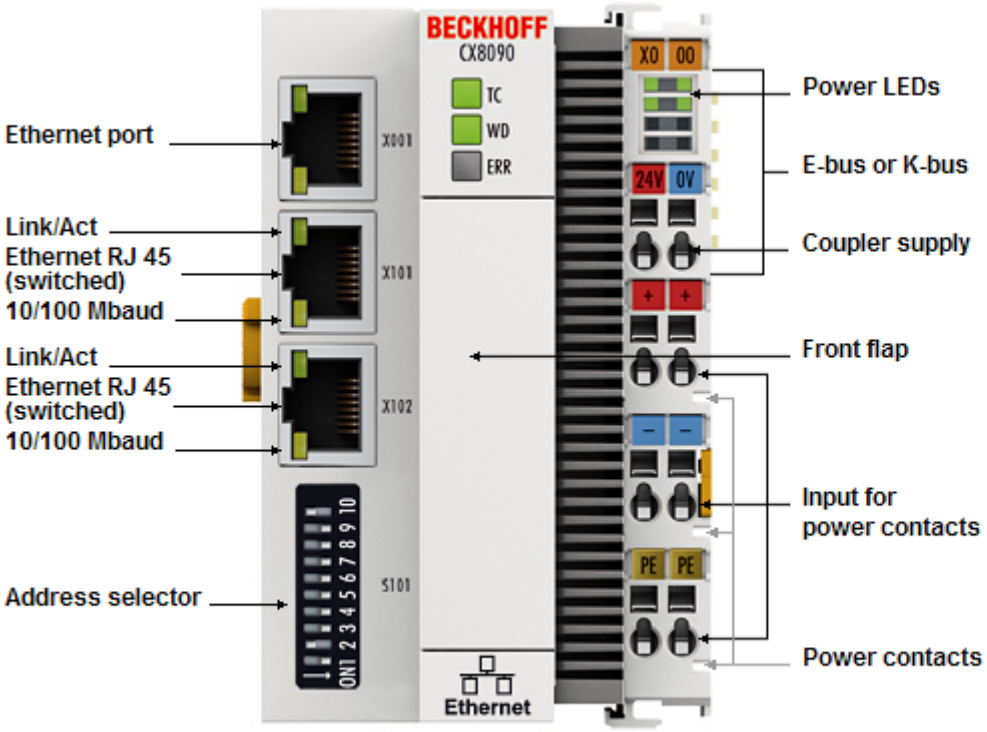

System data X001	Ethernet (CX8090)
Transmission medium	4 x 2 twisted pair copper cable category 5 (100 Mbaud)
Cable length	100 m from switch to CX8090
Data transfer rate	10/100 Mbaud
Topology	star wiring
Protocols	all non- real-time-capable protocols that are based on TCP or UDP and require no real-time extension

System data X101/102	Ethernet (CX8090) real-time interface
Transmission medium	4 x 2 twisted pair copper cable category 5 (100 Mbaud)
Cable length	100 m from switch to CX8090
Data transfer rate	100 Mbaud
Topology	Star-form cabling, line topology
Protocols (real-time)	RT-Ethernet, EAP (publisher/subscriber)
Protocols (non-real-time)	all non-real-time-capable protocols that are based on TCP or UDP and require no real-time extension

4.5 CX80xx - MicroSD cards

CAUTION	**MicroSD card as ignition source in potentially explosive atmospheres** Gases or dusts can be ignited by a spark discharge when the MicroSD card is inserted or removed. Switch off the power supply and wait until the 1-second UPS has discharged. Ensure that there is no explosive atmosphere before you insert or remove the MicroSD card.

In the basic version the CX80xx contains a MicroSD card with 512 MB. You can order it as an option with larger cards (up to 8 GB).

The cards employed are SLC memory with extended temperature range for industrial applications. Use exclusively MicroSD cards approved by Beckhoff.

Example of a MicroSD card:

Order identifier	Capacity	Description
CX1900-0123	1 GB	MicroSD card (SLC memory) with extended temperature range for industrial applications instead of the 512 MB card (ordering option)
CX1900-0125	2 GB	
CX1900-0127	4 GB	
CX1900-0129	8 GB	

Order identifier	Capacity	Description
CX1900-0122	512 MB	MicroSD card (SLC memory) with extended temperature range for industrial applications as spare part.
CX1900-0124	1 GB	
CX1900-0126	2 GB	
CX1900-0128	4 GB	
CX1900-0130	8 GB	

Further Information: http://www.beckhoff.de/CX8000

5 Mounting and wiring

5.1 Mounting

CAUTION	**Application in potentially explosive atmospheres** The Embedded PC must be fitted with a suitable housing and suitable cables for use in potentially explosive atmospheres. In potentially explosive atmospheres, the Embedded PC must always be installed in a housing with the correct protection class, and suitable cables must be used.

Install the Embedded PC in a housing or a control cabinet, if it is to be used in potentially explosive atmospheres.

Table 2: Embedded PC installation, requirements for housing in potentially explosive atmospheres.

Ex area	Flammable substance	Protection class
Zone 2	Gas	IP 54, according to EN 60079-15
Zone 22	dust, non-conductive	IP 54, according to EN 60079-31
	dust, conductive	IP 6x, according to EN 60079-31

Observe the temperature at the cable entry points into the housing. If the temperature during nominal operation is higher than 70 °C at the entry points or higher than 80 °C at the wire branching points, cables that are designed for these higher temperatures and Ex operation must be used.

5.1.1 Dimensions

The following drawings show the dimensions of the CX80xx Embedded PCs.

Dimensions

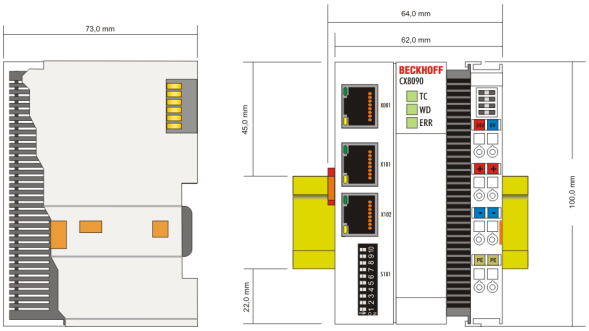

Drawings in various CAD formats can be found at: http://www.beckhoff.de/german/download/cx1000.htm

5.1.2 Installation on mounting rails

Snapping onto the mounting rail

The CX80xx can simply be snapped onto the mounting rail. To this end simply position the block on the mounting rail and push it slightly until it engages on the right-hand side. The is indicated by a distinct click. Use a screwdriver to push up the lock on the left-hand side, thereby turning it and causing it to engage audibly.

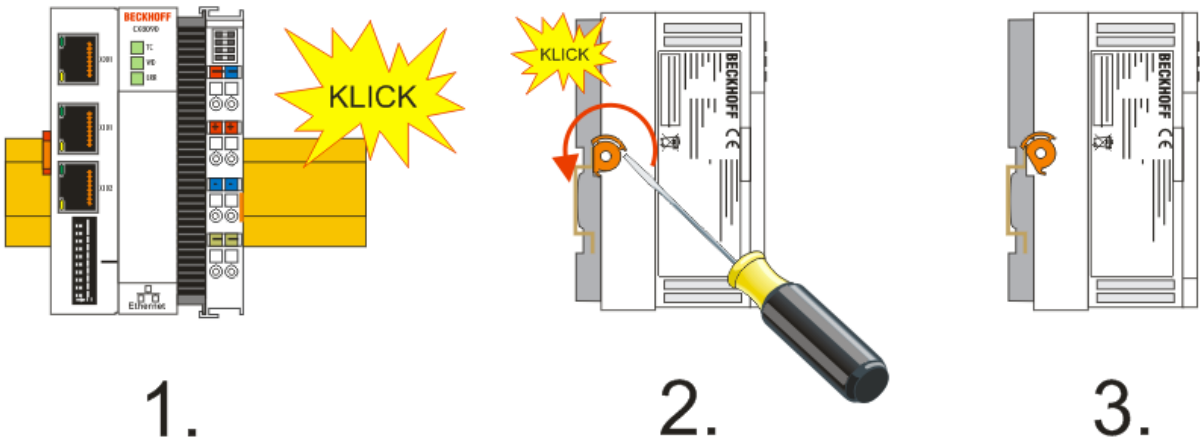

Attention	**Avoid damage!** Do not force the module or apply excessive pressure!

Permissible installation positions and minimum distances

Installation positions

Installation position up to 55 °C

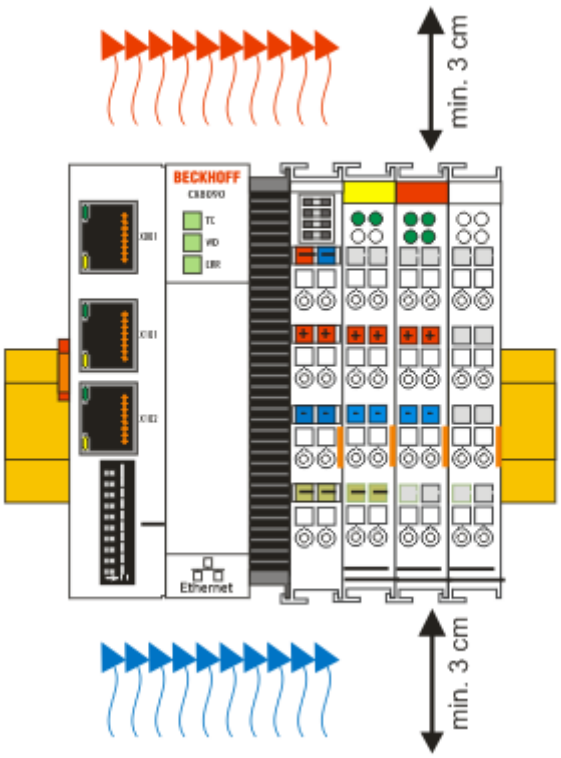

Attention	**Comply with the permitted installation position and minimum distances!** The maximum ambient temperature for CPU modules mounted on a DIN rail is 55°C. The orientation in which the device is fitted must be selected in such a way that cooling air can flow vertically through the ventilation holes. The images show the permitted and restricted installation positions. Mounting must provide a clearance of 30 mm both above and below a CX80xx device combination to ensure adequate ventilation of the base CPU module and the power supply unit.

The high performance and the compact design of the CX80xx systems may result in increased heat generation. The heat is dissipated via a passive ventilation system. This system requires the unit to be mounted correctly. Ventilation openings are located at the top and bottom of the housing. The system therefore has to be installed horizontally. This ensures optimum air flow.

Installation positions with reduced temperature range up to 45 °C

Other installation positions are permitted with a temperature range up to 45 °C.

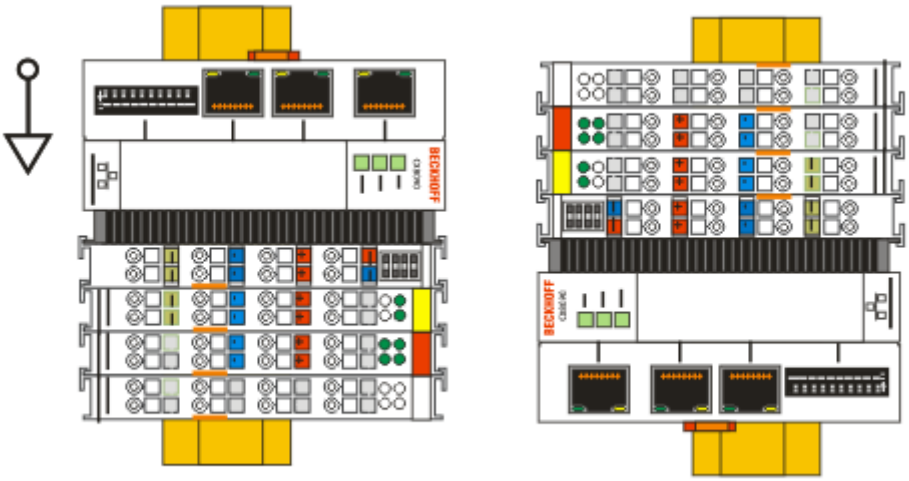

5.2 Wiring

5.2.1 Power supply

WARNING	**Risk of injury through electric shock and damage to the device!** Bring the CX80xx into a safe, de-energized state before starting assembly, disassembly or wiring!

CAUTION	**Connections as ignition source in potentially explosive atmospheres** Gases or dusts can be ignited by a spark discharge when the Embedded PC is wired. Switch off the power supply and wait until the 1-second UPS has discharged. Ensure that there is no explosive atmosphere before you wire the Embedded PC and connect or disconnect Bus Terminals.

This power supply unit is equipped with an I/O interface, which permits connection of the Beckhoff Bus Terminals. The power is supplied via the upper spring-loaded terminals with the designation 24 V and 0 V.

The supply voltage supplies the CX system and, via the terminal bus, the Bus Terminals with a voltage of 24 V_{DC} (15 %/+20 %). The dielectric strength of the power supply is 500 V. Since the Terminal Bus (K- and E-bus) only transfers data, a separate power supply is required for the Bus Terminals. This is provided by means of the power contacts, which are not connected to the power supply. Only 24 V DC may be connected to the power contacts; the maximum current load of the power contacts is 10 A.

CAUTION	**Power contact PE** The PE power contact must not be used for other potentials.

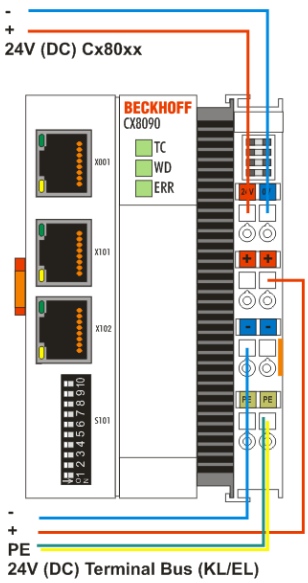

Requirements for the power supply (24 V)

In order to guarantee the operation of the CPU (CX80xx module) and the terminal strand in all cases, the power supply must supply 2.0 A at 24 V.

LED

If the power supply unit is connected correctly and the power supply is switched on, the two upper LEDs in the terminal prism are green. The left LED (Us) indicates the CPU supply. The right LED (Up) indicates the terminal supply. The other LEDs indicate the Terminal Bus status. A detailed description of the LEDs can be found in section "LED troubleshooting".

5.2.2 Ethernet

Ethernet connections

Assignment of the RJ45 interface, port 1

X001

PIN	Signal	Description
1	TD +	Transmit +
2	TD -	Transmit -
3	RD +	Receive +
4	connected	reserved
5		
6	RD -	Receive -
7	connected	reserved
8		

Assignment of the RJ45 interface, port 2 (switched)

CX8010, CX809x: X101/102
EK9xxx: X001 / X002

PIN	Signal	Description
1	TD +	Transmit +
2	TD -	Transmit -
3	RD +	Receive +
4	connected	reserved
5		
6	RD -	Receive -
7	connected	reserved
8		

Transmission standards

10Base5

The transmission medium for 10Base5 consists of a thick coaxial cable ("yellow cable") with a max. transmission speed of 10 Mbaud arranged in a line topology with branches (drops) each of which is connected to one network device. Because all the devices are in this case connected to a common transmission medium, it is inevitable that collisions occur often in 10Base5.

10Base2

10Base2 (Cheaper net) is a further development of 10Base5, and has the advantage that the coaxial cable is cheaper and, being more flexible, is easier to lay. It is possible for several devices to be connected to one 10Base2 cable. It is frequent for branches from a 10Base5 backbone to be implemented in 10Base2.

10BaseT

Describes a twisted pair cable for 10 Mbaud. The network here is constructed as a star. It is no longer the case that every device is attached to the same medium. This means that a broken cable no longer results in failure of the entire network. The use of switches as star couplers enables collisions to be reduced. Using full-duplex connections they can even be entirely avoided.

100BaseT

Twisted pair cable for 100 MBaud. It is necessary to use a higher cable quality and to employ appropriate hubs or switches in order to achieve the higher data rate.

10BaseF

The 10BaseF standard describes several optical fiber versions.

Short description of the 10BaseT and 100BaseT cable types

Twisted pair copper cable for star topologies, where the distance between two devices may not exceed 100 meters.

UTP

Unshielded twisted pair
This type of cable belongs to category 3, and is not recommended for use in an industrial environment.

S/UTP

Screened/unshielded twisted pair (screened with copper braid)
Has a general screen of copper braid to reduce influence of external interference. This cable is recommended for use with Bus Couplers.

FTP

Foiled shielded twisted pair (screened with aluminum foil)
This cable has an outer screen of laminated aluminum and plastic foil.

S/FTP

Screened/foiled-shielded twisted pair (screened with copper braid and aluminum foil)
Has a laminated aluminum screen with a copper braid on top. Such cables can provide up to 70 dB reduction in interference power.

STP

Shielded twisted pair
Describes a cable with an outer screen, without defining the nature of the screen any more closely.

S/STP

Screened/shielded twisted pair (wires are individually screened)
This identification refers to a cable with a screen for each of the two wires as well as an outer shield.

ITP

Industrial Twisted-Pair
The structure is similar to that of S/STP, but, in contrast to S/STP, it has only one pair of conductors.

5.3 Changing the battery

CAUTION	**Battery as ignition source in potentially explosive atmospheres** Gases or dusts can be ignited by a spark discharge when the battery is inserted or removed. Switch off the power supply and wait until the 1-second UPS has discharged. Ensure that there is no explosive atmosphere before you insert or remove the battery.

Attention	**An incorrectly inserted battery may explode!** Use exclusively the specified battery type. Make absolutely sure that positive and negative terminals of the battery are inserted correctly. (Plus pole on the left). Never open the battery or throw it into a fire. The battery cannot be recharged.

The battery of the CX80xx is required for the real-time clock (RTC) of the CX80xx. It ensures that the RTC continues to run in the power-off state so that the set time is available again on restarting.

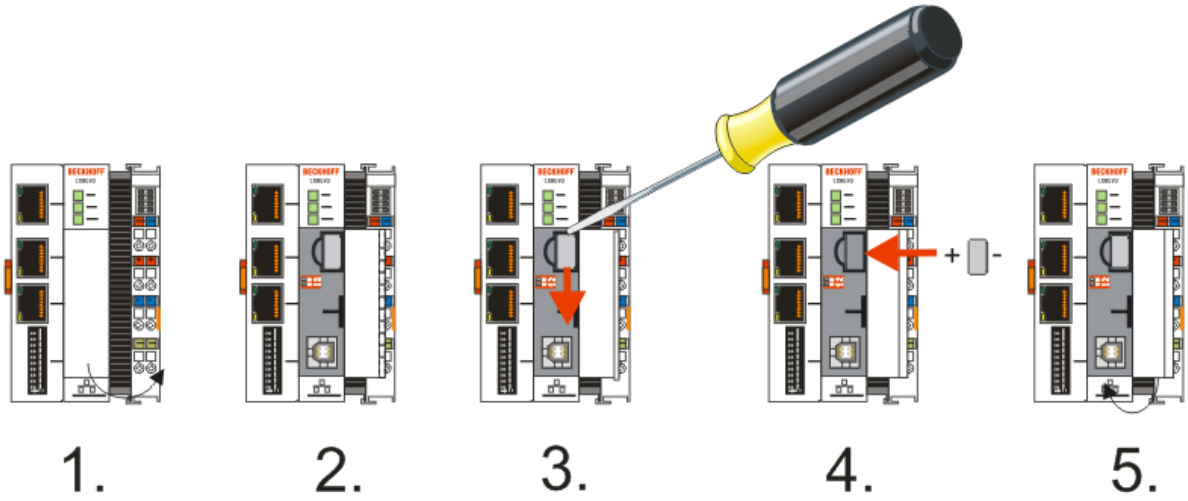

- Step 1: Open the flap
- Step 2/3: Take a small flat-blade screwdriver, insert it above the battery and prise the battery carefully out of the device
- Step 4: Insert the new battery. The plus pole must be on the left
- Step 5: Close the flap again

Battery type	Technical data
Duracell 303/357 SR44	1.5 V / 165 mAh

Note	**Battery maintenance** The battery must be replaced every 5 years. Spare batteries can be ordered from Beckhoff Service.

6 Parameterizing and commissioning

6.1 DIP switch

CAUTION	**DIP switches as ignition source in potentially explosive atmospheres** Gases or dusts can be ignited by a spark discharge when DIP switches are used. Switch off the power supply and wait until the 1-second UPS has discharged. Ensure that there is no explosive atmosphere before you use DIP switches.

10-pole DIP switch S101

The DIP switch has only one meaning for the Ethernet interfaces X101 and X102 which are switched.

Left off "0", right on "1".

DIP switch S101	Meaning
10 on and 9 off	DHCP active
10 off and 9 off	Fixed IP address 192.168.1.xxx; xxx stands for DIP switches 1 to 8, subnet mask is 255.255.255.0. The "basic IP address" can be modified in the operating system. The last byte of the IP address is then specified once again by the DIP switches.
10 off and 9 off DIP 1 to 8 all on	The complete IP address is taken from the operating system.

2-pole DIP switch (under the flap between the battery and the SD card slot)

DIP switch (red)	Meaning
1 off and 2 off	normal mode, TwinCAT is started
1 on and 2 off	The CX mode starts in Config Mode; the flash memory or, in the case of the CX80xx the SD card, is reachable via the USB interface (for example for an image update).
1 off and 2 on	Restore the registry
1 on and 2 on	No function so far

6.2 Setting the IP address

6.2.1 IP address

The CX8090/CX8091 has two Ethernet interfaces that are visible to the operating system - X001 and X101/102.

X001

IP addressing via the operating system; default is DHCP (represented in the operating system as FEC1)

X101/102

IP addressing via the DIP switches [▶ 26] (represented in the operating system as TCCCATMP1)

EtherCAT interface

The EtherCAT interface is a further Ethernet interface that is not visible in the operating system for the IP addressing.

6.2.2 Setting the address via DHCP server

Port 1 (X001) is set to DHCP by default.

Port 2 (X101 and X102) is to be configured by DIP switch (see DIP switch)

If DHCP is switched on, the CX is automatically assigned an IP address by the DHCP server. The DHCP server must know the MAC ID of the Bus Terminal Controller for this. The IP address should be assigned statically by the DHCP server. A local IP address is used if no DHCP server is reachable.

The DNS name is formed from the type and the last 3 byte of the MAC ID. The MAC ID is given on the production label of the Bus Terminal Controller.

CX8090 example

- MAC ID: 00-01-05-01-02-03
- DNS name: CX-010203

6.2.3 Subnet mask

The subnet mask is subject to the control of the network administrator, and specifies the structure of the subnet.

Small networks without a router do not require a subnet mask. The same is true if you do not use registered IP numbers. A subnet mask can be used to subdivide the network with the aid of the mask instead of using a large number of network numbers.

The subnet mask is a 32-bit number:

- Ones in the mask indicate the subnet part of an address space.
- Zeros indicate that part of the address space which is available for the host IDs.

Description	Binary representation	Decimal representation
IP address	10101100.00010000.00010001.11001000	172.16.17.200
Subnet mask	11111111.11111111.00010100.00000000	255.255.20.0
Network ID	10101100.00010000.00010000.00000000	172.16.16.0
Host ID	00000000.00000000.00000001.11001000	0.0.1.200

Standard subnet mask

Address class	Standard subnet mask (decimal)	Standard subnet mask (hex)
A	255.0.0.0	FF.00.00.00
B	255.255.0.0	FF.FF.00.00
C	255.255.255.0	FF.FF.FF.00

Note	**Assignment of subnets, host numbers and IP addresses** Neither subnet 0 nor the subnet consisting only of ones may be used. Host number 0, and the host number consisting only of ones, must not be used. Under BootP or DHCP the subnet mask is transmitted also by the server.

6.3 Configuration

6.3.1 CCAT adaptor

The CCAT adaptor is the driver for the various interfaces of the CX809x. It is found when the CX809x is scanned and can then be used in conjunction with the real-time capable Ethernet protocols.

No settings at the CCAT adapter are required, and it does not have to be linked with a task. It only needs to be present in the System Manager.

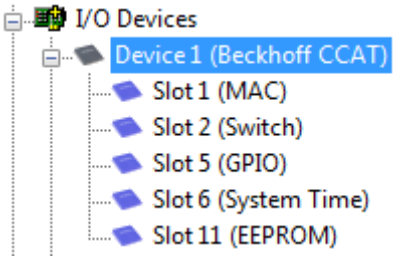

Note	**Search for protocol or driver** The CCAT adaptor must be selected when searching for the EtherCAT Automation Protocol (EAP) or the driver for the RT-Ethernet communication. See also the corresponding sections of the documentation (only CX8090).

Using the CCAT adapter for protocols that are not real-time capable

The CCAT adapter is not required if Ethernet protocols are used, which are not real-time capable. If the CCAT adapter is only used for protocols, which are not real-time capable (interfaces X101 and X102), we recommend deleting the CCAT adapter from the configuration in the System Manager. This ensures that the CCAT is optimally registered in the operating system.

Examples of protocols, which are not real-time capable, include ModbusTCP/UDP, ADS, TCP/IP, OPC UA and HTTP (HTML). The CCAT adapter must be deleted, if only protocols of this type are used.

Examples of real-time capable protocols include PROFINET, Ethernet/IP, BACnet/IP, RT Ethernet and EAP. These protocols require the CCAT adapter.

For configurations containing both real-time capable protocols and protocols that are not real-time capable, we recommend setting the task time as short as possible, in order to ensure that the non-real-time capable protocols are relayed to the operating system quickly enough. The real-time capable protocols can be set to a higher cycle time through the data exchange "factor". In this case the CCAT is triggered via a fast task, while the real-time capable protocols can be operated with a slower cycle time.

Sample:
The task operates with 1 ms. If the factor is set to 8, the real-time capable protocol is processed with 8 ms. The interface itself will continue to be processed with 1 ms.
If the task is set to 2 ms and the factor is left at 8, the RT Ethernet interface is processed with 16 ms.

Make sure you monitor your system load. If the system load is too high, telegrams may be discarded or timeouts may occur. A system load of less than 60 % is recommended.

6.3.2 CX80xx - Operating system

The CX80xx comes with a Microsoft CE operating system, version 6.0. This operating system is adapted and optimized for the CX80xx. Not all CE6.0 components are available.

Safety

From image version 3.54b security was tightened. This applies to CERHOST and TELNET. Both services are now switched off in delivery state. To reactivate these services, you need a Micro SD card reader.

CERHOST

CERHOST is deactivated by current images on first start-up via the registry file *CeRemoteDisplay_Disable.reg*, which is located in the folder *RegFiles*.

To reactivate CERHOST, delete the file *CeRemoteDisplay_Disable.reg* from the folder *RegFiles* and also the folder *Documents and Settings*.
Then reinsert the Micro SD card in the CX and reboot. The CX creates a new *Document and Settings* directory and then reboots automatically.
The CX is then accessible again via CERHOST.

TELNET

TELNET is deactivated by current images on first start-up via the registry file *Telnet_Disable.reg*, which is located in the folder *RegFiles*.

To reactivate TELNET, delete the file *Telnet_Disable.reg* from the folder *RegFiles* and also the folder *Documents and Settings*.
Then reinsert the Micro SD card in the CX and reboot. The CX creates a new *Document and Settings* directory and then reboots automatically.
The CX is then accessible again via TELNET.

IMAGE

If you do not know what image is loaded on the CX80xx, you can determine it quite easily.

- Via the web diagnostics page of the CX. Here you can find the build number under the *TwinCAT* device.
  Opening the web diagnostics page:
  - IP address</config
  or
  - CX name/config
  Example:
  - *172.16.17.201/config*
  or
  - *CX-01551E/config*

- Via a Micro SD card reader.
  The Micro SD card contains a file with the name of the image.
  Example CX8000_CE600_LF_v354b_TC211R3_B2248.
  TC211R3_2248 indicates the TwinCAT build; in the example the build is 2248.

Prerequisites

Feature / platform	CX80x0 LF version 3.xx
ATL	Xtd
MFC	X
XML DOM	X
COM	X
COM Storage	-
Winsock	X
TCP/IP	X
TCP/IPv6	-
Firewall	X
Network Utilities (IpConfig, Ping, Route)	X
UPnP	
Control Point	-
Device Host	X
SOAP	
Client	-
Server	-
DCOM	**-**
Object Exchange Protocol OBEX	-
Message Queuing MSMQ	-
Server	
File Server (SMB/CIFS)	X
File Server	X
Print-Server (SMB/CIFS)	-
RAS Server / PPTP Server	-
Simple Network Management Protocol (SNMP)	X
Telnet Server	X
HTTP / ASP / FTP / SNTP -Server	X
Web Server (HTTPD) / Active Server Pages (ASP) Support / JScript 5.6 / VBScript 5.6	X
Simple Network Time Protocol (SNTP)	X
HTML / DHTML, TLS, ISAPI extensions	X
Internet Explorer 6.0	-
Java Applets	-
NET Compact Framework	v3.5
RDP Client (Remote Desktop protocol)	-
CAB File Installer/Uninstaller	X
TwinCAT (Level PLC)	X
USB support	X
Printer, storage on Compact Flash, for example	-
HID (Human interface devices)	-
Touch	-

6.3.3 Power supply terminal

K-bus interface

It is possible to operate K-bus terminals on the CX80xx.

The CX80xx recognizes these terminals automatically on scanning, reads out the terminal types and automatically places them in the System Manager.

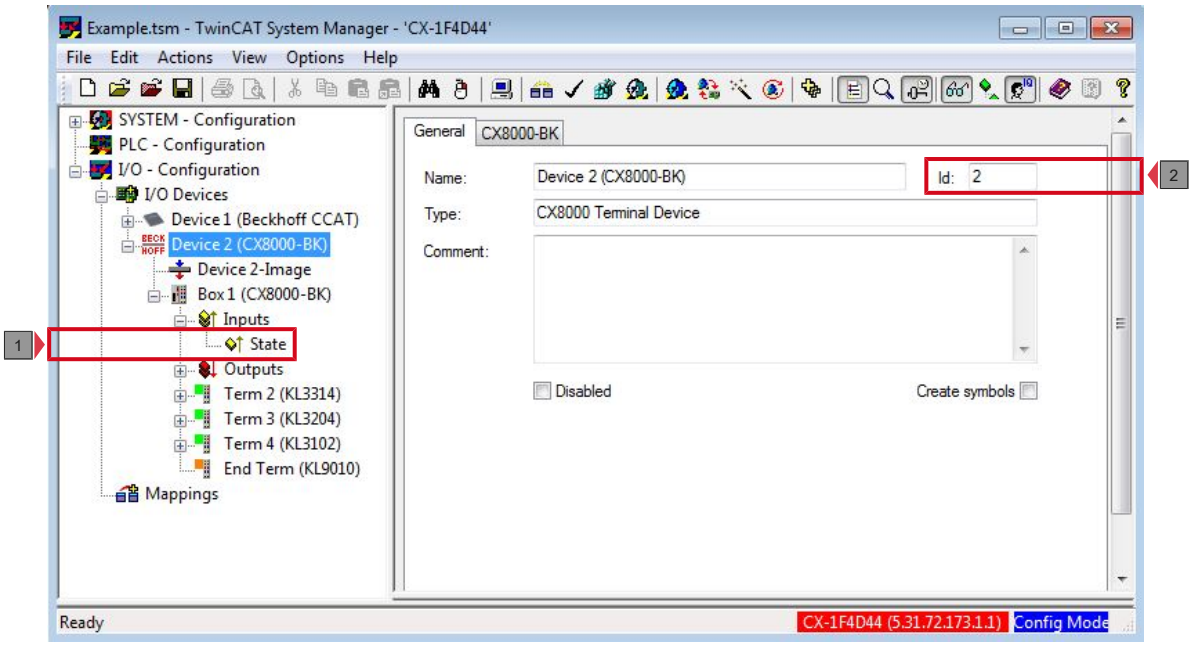

Fig. 1: K-Bus Interface

K-bus state

The K-bus status is saved in the state byte (see fig. K-bus interface "1"). If the value is 0 the K-bus is operating synchronously and without errors. If the value should be <>0 this can be an error, but it may also be *just* a notice that, for example, the K-bus requires longer than the employed task and is thus no longer synchronous to the task. The task time should be faster than 100 ms. We recommend a task time of less than 50 ms. The K-bus update time typically lies between one and five ms.

Bit 0 = K-Bus Err
Bit 1 = Terminal State Err
Bit 2 = Process Data Length Err
Bit 8 = No valid Inputs
Bit 9 = K-Bus Input Update busy
Bit 10 = K-Bus Output Update busy
Bit 11 = Watchdog Err
Bit 15 = Acyc. Function atcive (e.g. K-Bus Reset)

If there is a K-bus error, this can be reset via the IOF_DeviceReset function block (in the TcIoFunctions.lib).

The NetID is that of the CX80xx and can thus be entered as an empty string, the Device ID (see fig. K-bus Interface "2") is to be taken from the System Manager.

E-bus interface

The operation of E-bus terminals and EtherCAT devices is possible on the CX80xx.

The CX80xx recognizes these terminals automatically on scanning, reads out the terminal types and automatically places them in the System Manager.

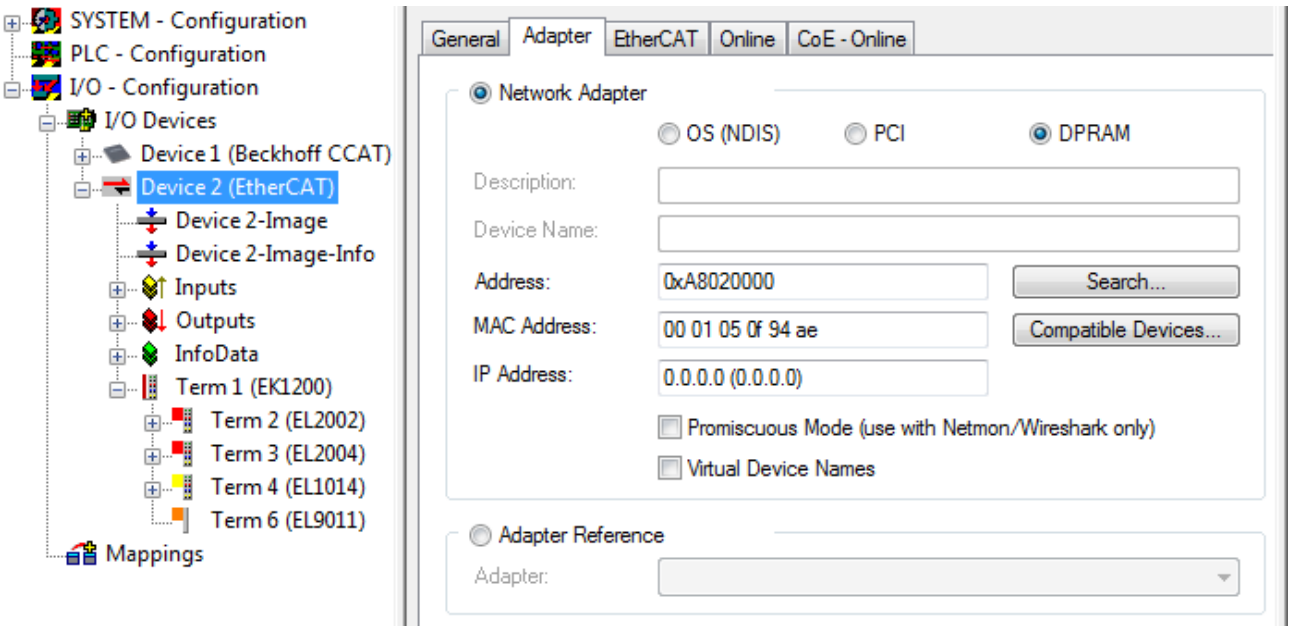

Note	**DC Distributed Clocks** The CX80xx series is not suitable for the use of EtherCAT slaves that use or need distributed clocks functionality.

6.3.4 Realtime Ethernet

6.3.4.1 Real-Time Ethernet

The CX8090 supports the Real-Time Ethernet protocol from Beckhoff as a master with its Real-Time Ethernet interface (X101/102). This means that the BK9xx0 bus couplers on the CX8090 can be operated as decentralized nodes. In principle there is no restriction on the number of bus couplers that can be connected to a CX8090; however, it is recommended to limit this to 3 nodes.

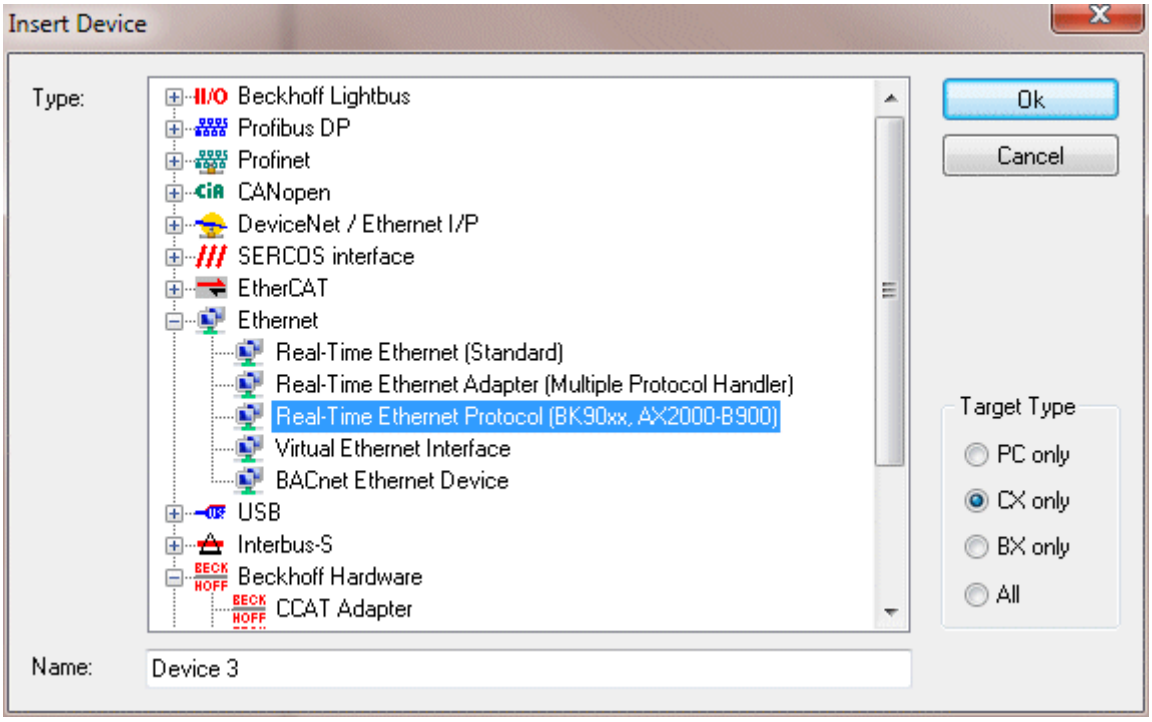

Fig. 1: appending the RT-Ethernet protocol

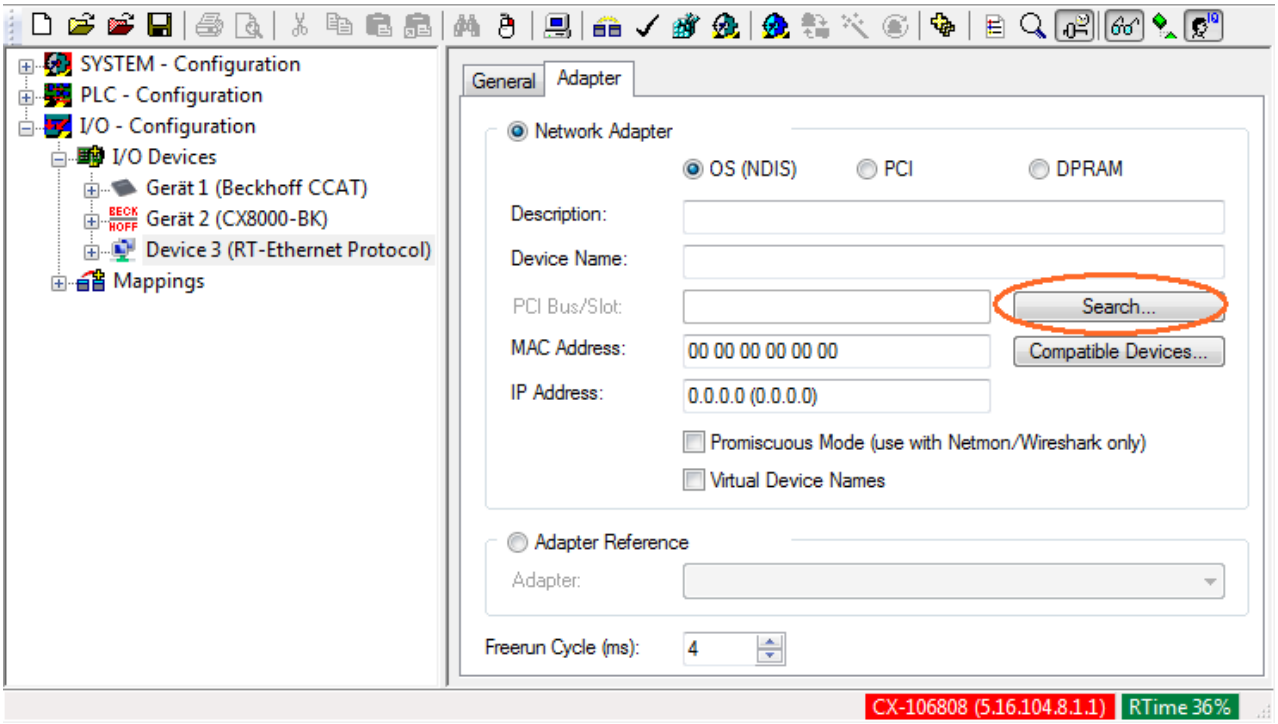

Fig. 2: searching for the interface

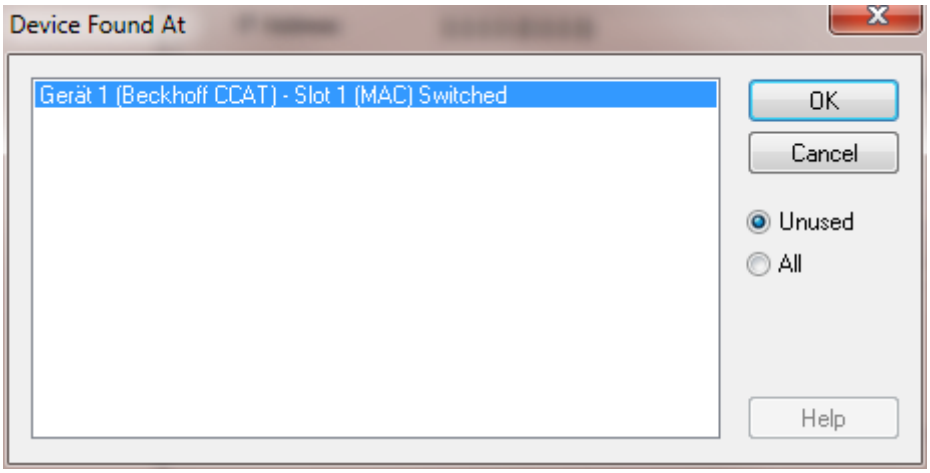

Fig. 3: finding the interface

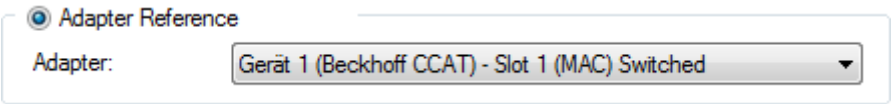

Fig. 4: entered interface

If you now switch the CX8090 to Config Mode you can scan for RT-Ethernet-capable devices. Naturally you can also append the bus couplers manually.

Note	**RT-Ethernet protocol and EAP protocol** Instead of the RT-Ethernet protocol, also the EAP protocol can be operated. Simultaneous operation of both protocols is in preparation. Pay attention here to the task times used and adjust them according to the system load.

6.3.4.2 EtherCAT Automation Protocol (EAP)

The CX8090 supports the EtherCAT Automation Protocol (EAP) from Beckhoff with its real-time Ethernet interface (X101/102). Data can be exchanged in real-time with other controllers that support the EAP via the Publisher and Subscriber services.

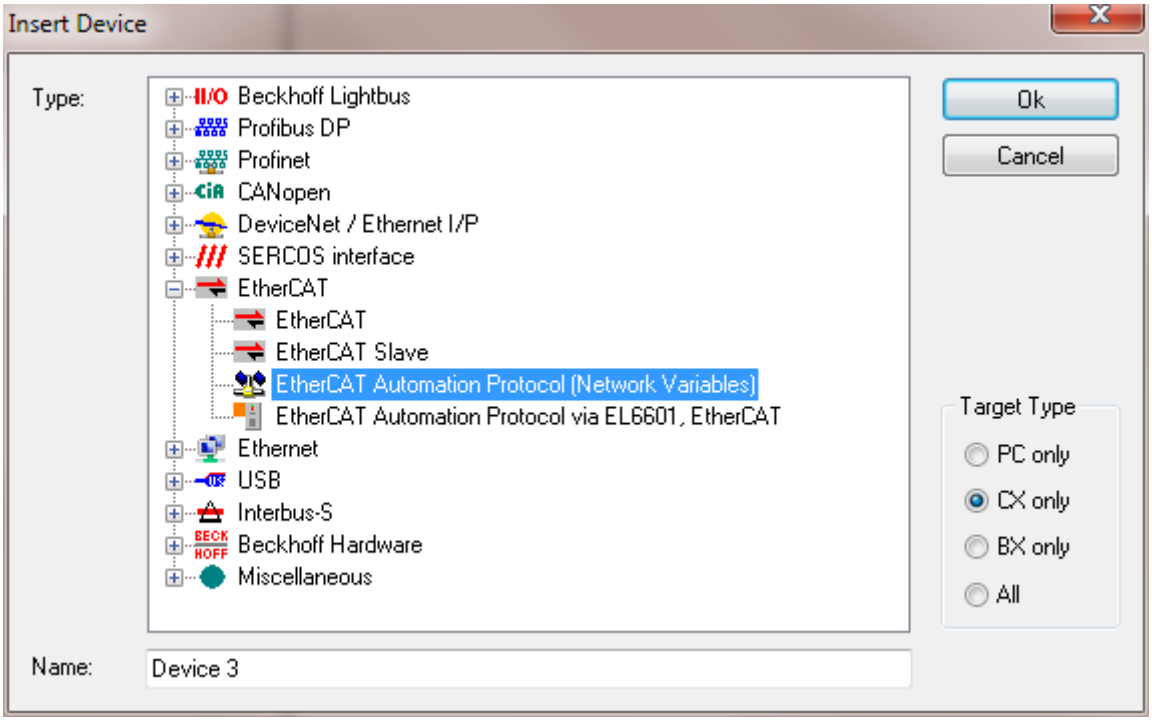

Fig. Appending the EtherCAT Automation Protocol

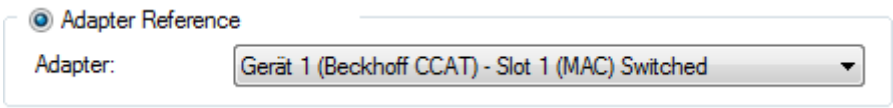

Fig. Entered interface

Further Information on EAP

English: http://infosys.beckhoff.com/content/1033/tcsystemmanager/netvars/tcsysmgr_netvar_intro.htm?id=12303

German: http://infosys.beckhoff.com/content/1031/tcsystemmanager/netvars/tcsysmgr_netvar_intro.htm?id=12303

Note	**EAP protocol and RT-Ethernet protocol** The EAP protocol can be operated instead of the RT-Ethernet protocol. Simultaneous operation of both protocols is in preparation. Pay attention here to the task times used and adjust them according to the system load.

6.3.5 Web Services

Upnp webpages

There is a Upnp webpage on the CX80xx for diagnostics.

User name: guest
Password: 1

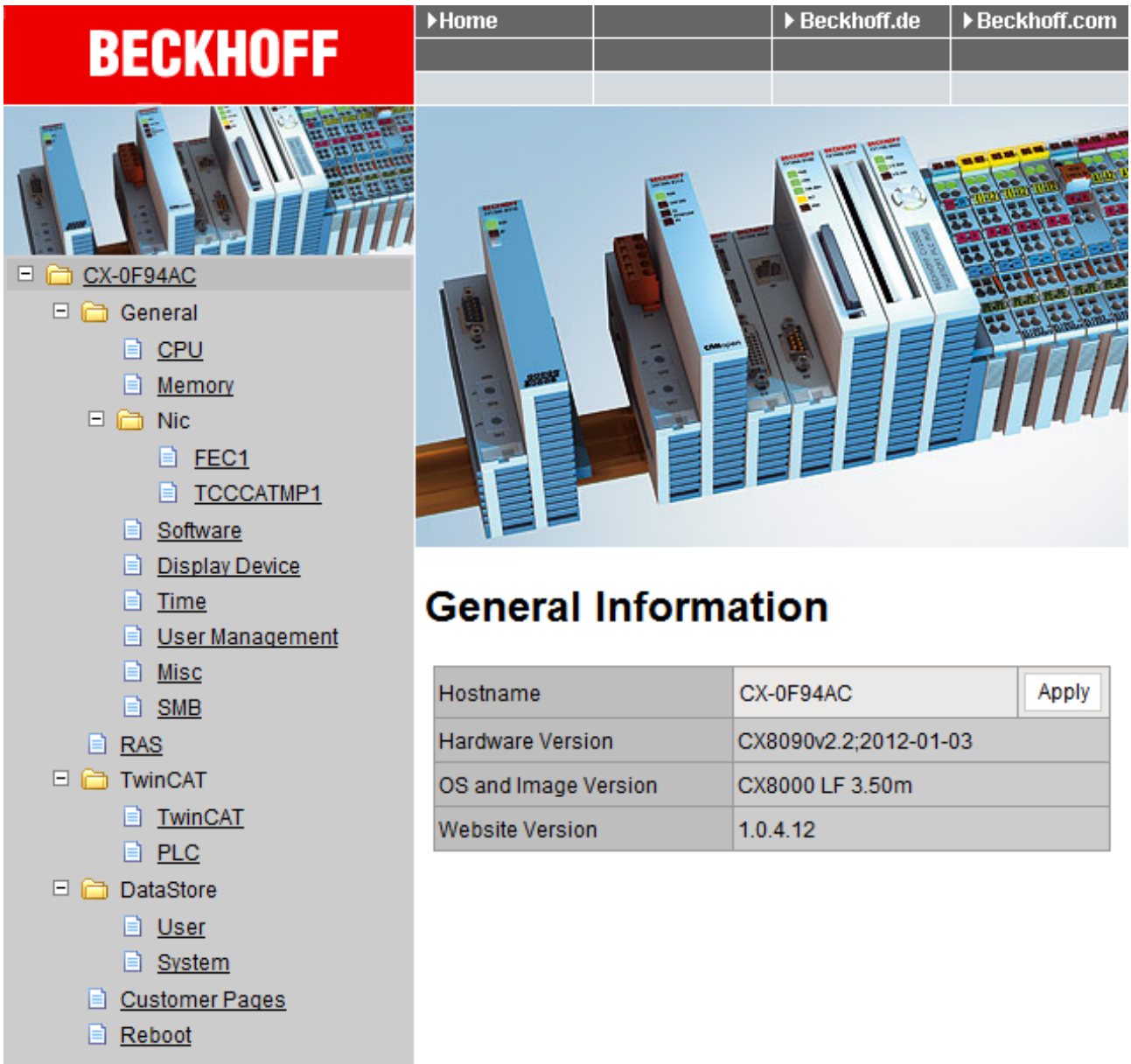

Enter the IP address or the device name.

Example

http://**cx-0f94ac**/config

http://**172.16.17.55**/config

The diagnostic page was revised starting from image v354c.

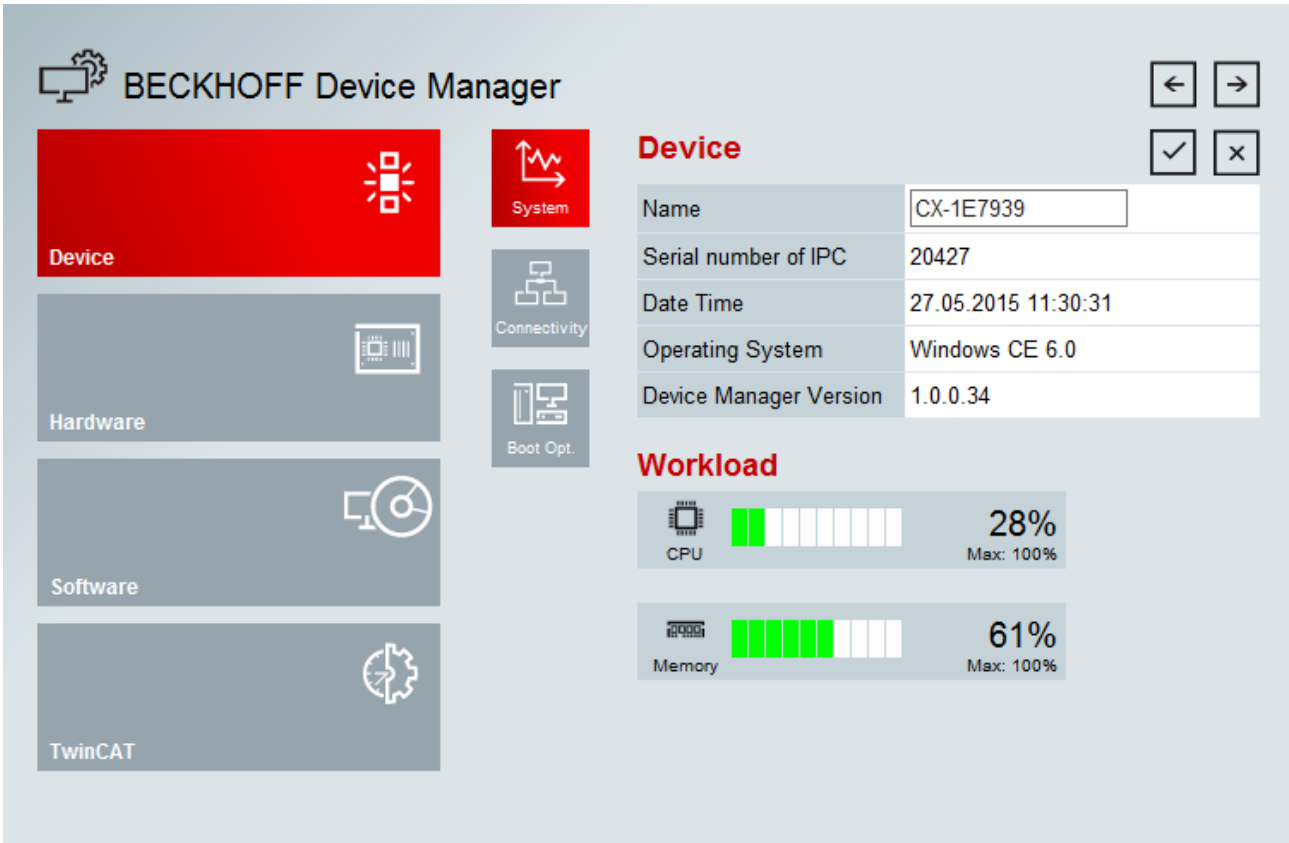

Web visualization

There is a web visualization on the CX80xx. This can be prepared and activated with the help of the PLC Control in TwinCAT.

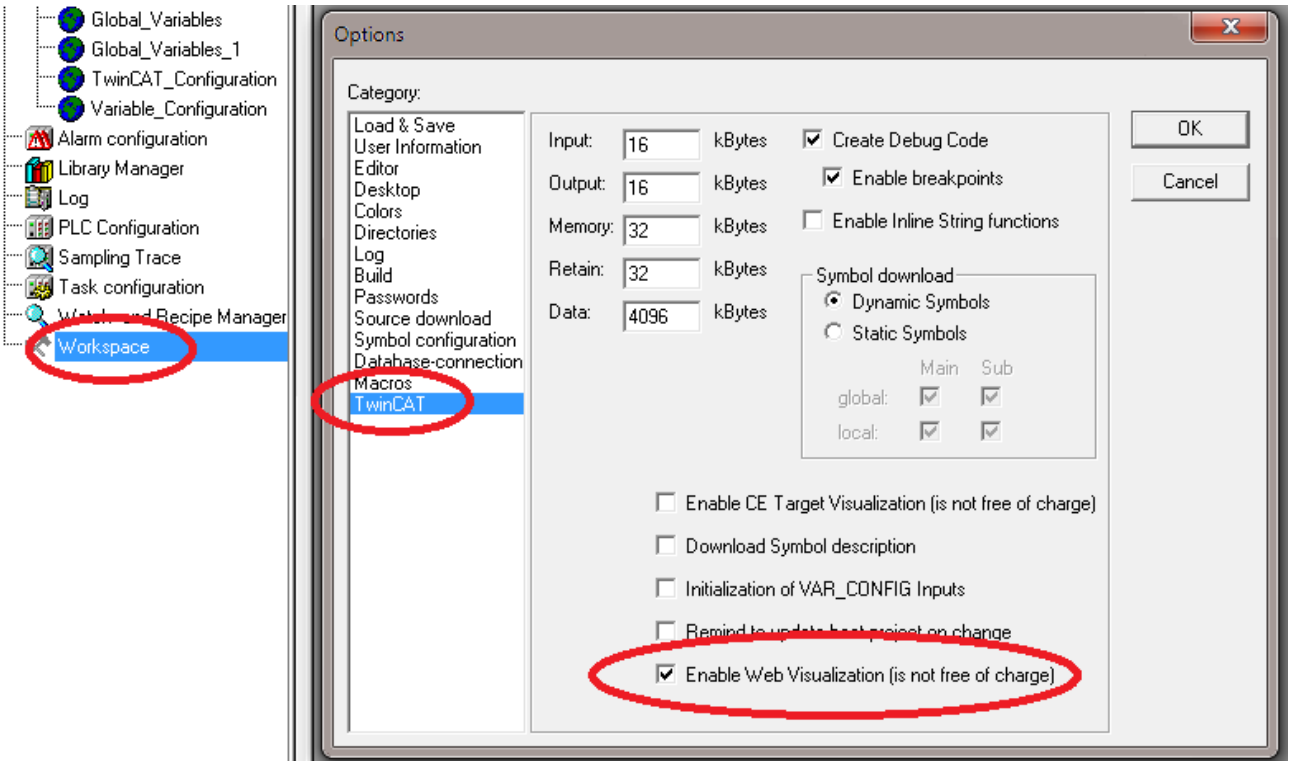

The call is made via the IP address or the device name in a web browser.
Further information can be taken from the documentation on the web visualization (see TwinCAT Supplements PLC HMI Web).

Example

http://**cx-0f94ac**/TcWebVisu/

http://**172.16.17.44**/TcWebVisu/

Ascertain before logging in (i.e. in the logged out condition) whether a ADS connection is established to the CX – "TwinCAT Running" in the bottom right-hand corner must be green. If that is not the case, please go onto Online/Selection of the target system again and call the CX once again.

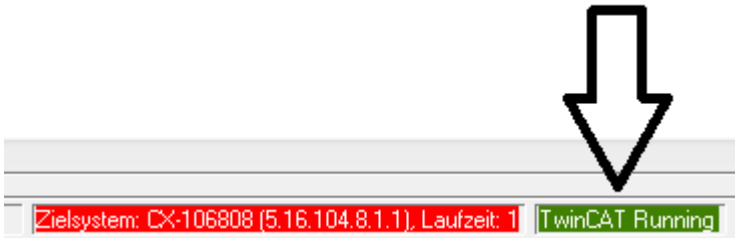

The following path must be specified for downloading the web data for the web user interface:

\hard disk\twincat\boot\webvisu\

If that is not the case, the PLC Control will copy the data into the wrong folder and the webpage will be displayed incorrectly or not at all.

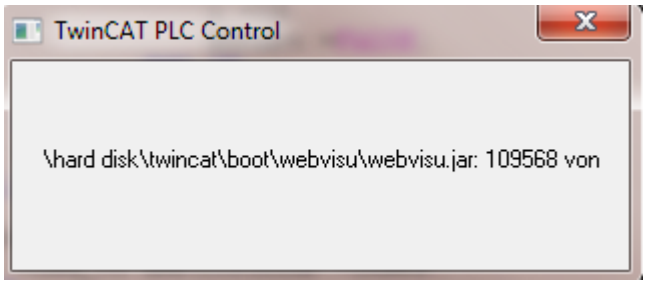

Remote Display

This page describes the steps for remotely controlling a CE device with CE operating system from a further PC by **'Remote Display'**.

Software required on the PC:

- Windows NT, Windows 2000, Windows XP or Windows 7
- Microsoft Remote Display (CERHOST, available license-free from Microsoft)

Establishing the connection

The "Remote Display" tool is started on the PC. The address of the CE device can now be entered under the menu option "File - > Connect"; this can be both the TCP-IP address or, if available, also the name of the CE device.

If the CE device is provided with password protection, then the password must also be entered accordingly. No password is set in the delivery condition.

After entering the target address, the user interface of the CE device is available for remote control on the PC.

Download : https://infosys.beckhoff.com/content/1033/cx8090_hw/Resources/zip/1608562059.zip

6.3.6 Real Time Clock (RTC)

The RTC is read out via the FB_LocalSystemTime function blocks and can be set with the NT_SetLocalTime block (see TcUtilities.lib).

The RTC is supplied by the battery and can thus continue to run in the power-off state.

6.3.7 1-second UPS (Uninterruptible Power Supply)

Technical concept

The 1-second UPS is an UltraCap capacitor, which, in the event of a voltage outage, continues to supply power to the processor for approx. 4 to 5 seconds, so that persistent data can be saved. Data saving generally takes less than 4 to 5 seconds. However, due to ageing of the components used, one should assume that the UPS can provide power for a maximum of 1 second. You can assume that data saving continues to work smoothly, even after many years. If you save data yourself, we recommend that this should take place within 1 second. Should it take longer, we would advise against it.

The 1-second UPS supplies neither the K-bus nor the E-bus with power. Please note that the data of these devices may already be invalid when the 1-second UPS is activated. Also, the fieldbus system (or Ethernet) may not work or not work properly once the 1-second UPS was activated.

Saving of the persistent data only takes place in conjunction with the function block FB_S_UPS_CX80xx. This block must be called cyclically. We strongly recommend using the default values for the block.

Saving and loading persistent data

The persistent data are stored on the SD card as a wdp file. When the PLC starts up, the wdp file is loaded from the SD card, saved there as a wd~-file (backup), and then deleted. Another current wpd file is not written until the system is shut down or the 1-second UPS is activated. If no wdp file is present when the CX starts up, the persistent data are invalid and are deleted (default setting).
The reason is that the 1-second UPS was activated before the TwinCAT PLC was started during startup of the CX. In this case no persistent data were saved, since the system was unable to ensure sufficient buffer time for saving the data.

Loading a backup of the persistent data

To load the persistent data from the backup (wp~-file), it has to be enabled in the System Manager.

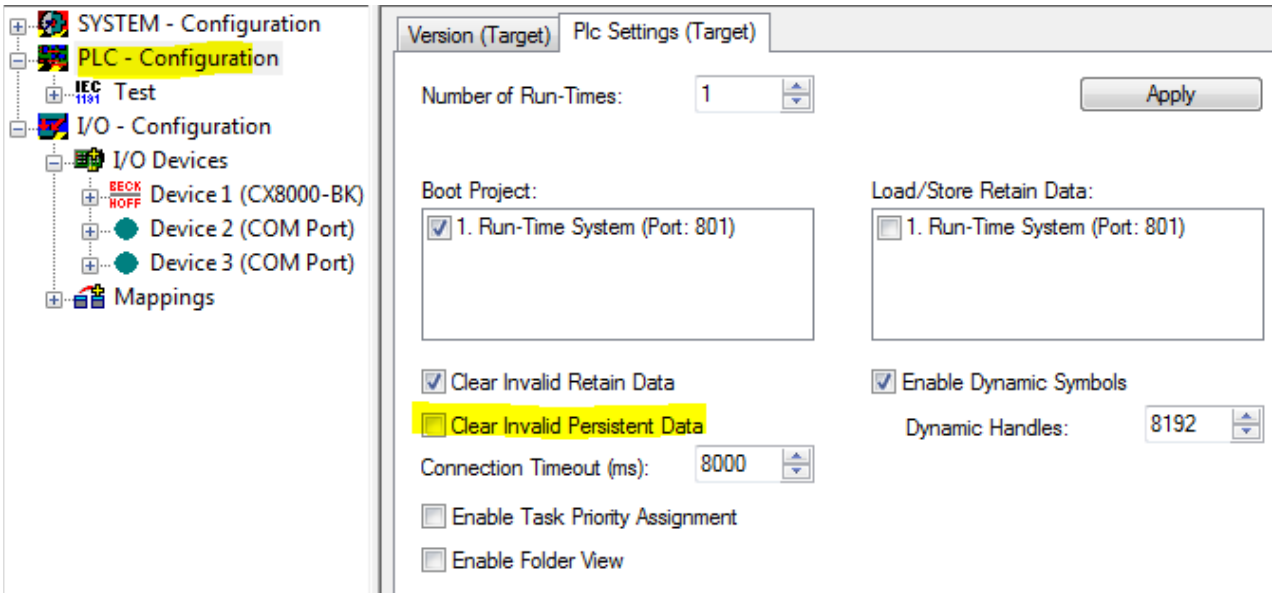

Or via the following registry entry:

[HKEY_LOCAL_MACHINE\SOFTWARE\Beckhoff\TwinCAT\Plc]"ClearInvalidPersistentData"= 0

The default factory setting is "1".

Checking whether current persistent data (from wdp file) or saved persistent data from the backup (wd~-file) were loaded

In this example, the CX8090 indicates via the ERR LED whether the persistent data were loaded. The LED cannot be used for other CX8xxx models.

```
IF systeminfo.bootDataFlags.4 AND NOT
systeminfo.bootDataFlags.5 THEN


F_CX8090_LED_ERR(eLED_GREEN_ON);     (* persistent
data is OK *)

ELSIF systeminfo.bootDataFlags.4 AND systeminfo.bootDataFlags.5
THEN


F_CX8090_LED_ERR(eLED_RED_ON);
(* load backup persistent data *)

ELSE

    F_CX8090_LED_ERR(eLED_RED_FLASHING_200ms); (* no
persistent data *)

END_IF
```

Note	**Purpose of the 1-second UPS** The 1-second UPS should only be used for managing the persistent data. Other applications are not supported and are not covered by our complaints procedure. Retain data cannot be used for the 1-second UPS!

6.3.8 CPU load

In the delivery condition the CPU load display is deactivated on all CX80xx devices (it is displayed with a constant 10%). The CPU load display is deactivated because it accounts for a considerable portion of the CPU load itself. The CPU load can be activated for brief diagnostic help; however, we recommend that you deactivate it again after the diagnostics.

HKEY_LOCAL_MACHINE/SOFTWARE/BECKHOFF/TWINCAT/RTime/EnableRTimeMeasurement 0 deactivated, 1 activated

A TwinCAT restart of the CX80xx is necessary after making the setting.

Note	**CPU load** The CPU load is calculated internally with 10 ms. The CPU load display may fluctuate very strongly if one or more tasks exceeding 10 ms are used.

7 Programming

7.1 Library for CX80xx

Download : https://infosys.beckhoff.com/content/1033/cx8090_hw/Resources/zip/1608565003.zip

7.2 Seconds UPS

7.2.1 Function blocks

FUNCTION_BLOCK FB_S_UPS_CX80xx

```
                    FB_S_UPS_CX80XX

sNetID : T_AmsNetId                 bPowerFailDetect : BOOL
iPLCPort : UINT                      eState : E_S_UPS_State
tTimeout : TIME
eUpsMode : E_S_UPS_Mode
ePersistentMode : E_PersistentMode
tRecoverTime : TIME
```

The FB_S_UPS function block can be used on the CX80xx with the seconds UPS in order to activate the seconds UPS from the PLC. This allows the persistent data to be saved and a quick shutdown to be performed in the event of a power failure. If possible the default values of the INPUTs of the FB_S_UPS should be retained.

Attention	**Loss of data** The seconds UPS can be used only for a few seconds in the event of a power failure in order, for example, to save persistent data. The data must be saved in the fast persistent mode "SPDM_2PASS", even though this can lead to real-time violations. Sufficient router memory must be configured for the storage of the persistent data!

The second UPS does not have sufficient capacity for bridging power failures. Saving can take place only on Micro SD cards.

A QuickShutdown is performed automatically in the eSUPS_WrPersistData_Shutdown mode (standard setting) after the storage of the persistent data.

In the eSUPS_WrPersistData_NoShutdown mode only the persistent data are saved, no QuickShutdown is performed.

In the eSUPS_ImmediateShutdown mode a QuickShutdown is executed immediately without saving data.

In the eSUPS_CheckPowerStatus mode only a check is performed as to whether a power failure has occurred. If this is the case, the module only switches back to the PowerOK state after the expiry of tRecoverTime (10s).

Independent of the mode and thus independent of the saving or the shutting down of the controller, the UPS switches the main board off after the capacitors have discharged, even if the voltage has returned in the meantime.

Attention	**Caution when using files:** If other applications or the PLC keep other files open or write to them, this can lead to faulty files if the UPS switches off the controller.

VAR_INPUT

```
VAR_INPUT
    sNetID      : T_AmsNetId := '';            (* '' = local netid *)
    iPLCPort    : UINT := AMSPORT_R0_PLC_RTS1;     (* PLC Runtime System for writing persis-
tent data *)
    iUPSPort    : UINT := 16#4A8;          (* Port for reading Power State of UPS, dafault 16#4A8 *)
    tTimeout    : TIME := DEFAULT_ADS_TIMEOUT;     (* ADS Timeout *)
    eUpsMode    : E_S_UPS_Mode := eSUPS_WrPersistData_Shutdown; (* UPS mode (w/wo writing persis-
tent data, w/wo shutdown) *)
    ePersistentMode : E_PersistentMode := SPDM_2PASS; (* mode for writing persistent data *)
    tRecoverTime    : TIME := T#10s;           (* ON time to recover from short power fail-
ure in mode eSUPS_WrPersistData_NoShutdown/eSUPS_CheckPowerStatus *)
END_VAR
```

E_S_UPS_Mode

sNetID : AmsNetID of the controller.

iPLCPort : Port number of the PLC runtime system (AMSPORT_R0_PLC_RTS1 = 801, AMSPORT_R0_PLC_RTS2 = 811, AMSPORT_R0_PLC_RTS3 = 821, AMSPORT_R0_PLC_RTS4 = 831).

iUPSPort : Port number via which the UPS status is read (standard value is 16#4A8).

tTimeout : Timeout for the execution of the QuickShutdown.

eUpsMode : The eUpsMode defines whether persistent data are to be written and whether a QuickShutdown is to be performed.
Standard value is eSUPS_WrPersistData_Shutdown, i.e. with writing of the persistent data and then QuickShutdown. See E_S_UPS_Mode.

ePersistentMode : Mode for the writing of the persistent data. Standard value is SPDM_2PASS.
SPDM_2PASS, all persistent data are saved at once, which can lead to the cycle time being exceeded.
SPDM_VAR_BOOST, here, each persistent variable is written separately; if there is a large amount of persistent data this can accordingly take many cycles. This is not recommended as some data may be lost if the time of the seconds UPS is not sufficient.

tRecoverTime : Time after which the UPS reverts to the PowerOK status in the case of UPS modes without shutdown.
The tRecoverTime must be somewhat longer than the maximum holding time of the UPS, since the UPS switches off even when the voltage returns.

VAR_OUTPUT

```
VAR_OUTPUT
    bPowerFailDetect    : BOOL;        (* TRUE while powerfailure is detected *)
    eState      : E_S_UPS_State;   (* current ups state *)
END_VAR
```

E_S_UPS_State

bPowerFailDetect : True during the power failure; False if the supply voltage is present.

eState : Internal state of the function block, for values see E_S_UPS_State.

VAR_GLOBAL

```
VAR_GLOBAL
    eGlobalSUpsState : E_S_UPS_State;    (* current ups state *)
END_VAR
```

E_S_UPS_State

eGlobalUpsState : Internal state of the function block as a global copy of the VAR_OUTPUT **eState**; for values see E_S_UPS_State.

Prerequisites

Development environment	Target platform	Hardware	PLC libraries to be linked
TwinCAT v2.11.0 build 2220 or higher (R3)	ARM	Seconds UPS	TcSystemCX80xx.lib

7.2.2 Data types

TYPE E_S_UPS_Mode

```
eSUPS_WrPersistData_Shutdown: Schreiben der Persistenten Daten und dann QuickShutdown
eSUPS_WrPersistData_NoShutdown: Nur Schreiben der Persistenten Daten (kein QuickShutdown)
eSUPS_ImmediateShutdown: Nur QuickShutdown (kein Schreiben der Persistenten Daten)
eSUPS_CheckPowerStatus: Nur Status ermitteln (weder Schreiben der Persistenten Daten noch QuickShut-
down)
```

Prerequisites

Development environment	Target platform	Hardware	PLC libraries to be linked
TwinCAT v2.11.0 build 2220 or higher (R3)	ARM	Seconds UPS	TcSystemCX80xx.lib

TYPE E_S_UPS_State

```
eSUPS_PowerOK:
    in allen Modi: Versorgungsspannung ist OK

eSUPS_PowerFailure:
    in allen Modi: Versorgungsspannung fehlerhaft (steht nur einen Zyklus an)

eSUPS_WritePersistentData:
    im Modus eSUPS_WrPersistData_Shutdown: Schreiben der Persistenten Daten ist aktiv
 im Modus eSUPS_WrPersistData_NoShutdown: Schreiben der Persistenten Daten ist aktiv

eSUPS_QuickShutdown:
    im Modus eSUPS_WrPersistData_Shutdown: QuickShutdown ist aktiv
 im Modus eSUPS_ImmediateShutdown: QuickShutdown ist aktiv

eSUPS_WaitForRecover:
    im Modus eSUPS_WrPersistData_NoShutdown: Warten auf Wiederkehr der Spannung
 im Modus eSUPS_CheckPowerStatus: Warten auf Wiederkehr der Spannung

eSUPS_WaitForPowerOFF:
    im Modus eSUPS_WrPersistData_Shutdown: Warten auf das Abschalten durch die USV
 im Modus eSUPS_ImmediateShutdown: Warten auf das Abschalten durch die USV
```

Prerequisites

Development environment	Target platform	Hardware	PLC libraries to be linked
TwinCAT v2.11.0 build 2220 or higher (R3)	ARM	Seconds UPS	TcSystemCX80xx.lib

7.3 CX8090 LED

7.3.1 Function

FUNCTION F_CX8090_LED_WD (WD=Watchdog)

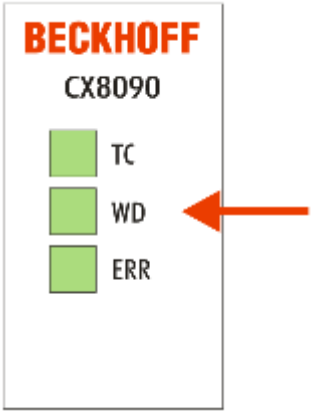

Since the CX8080, CX8090 and CX8091 supports different protocols, the two LEDs on the CX8080/CX809x are not used by the firmware. Hence, the user has the possibility to generate diagnostic messages himself, which must then also be documented for the end customer so that he can also interpret these messages. For example, you can use the LEDs to display whether the DHCP server has assigned an IP address to the CX8080/CX809xor, if you are using the RT-Ethernet with bus couplers such as the BK9000, you can display whether all BK9000s are in data exchange. Possible colors are red and green.

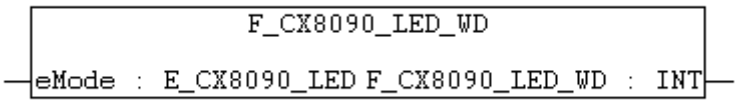

The F_CX8090_LED_WD function uses the WD LED on the CX8080/CX809x. Various colors and flash modes can be used here.

VAR_INPUT

```
VAR_INPUT
    eMode       : E_CX8090_LED;
END_VAR
```

eMode [▶ 48] : way in which the LED lights up.

VAR_OUTPUT

```
F_CX8090_LED_WD       : INT;
```

F_CX8090_LED_WD : -1, non-implemented flash code, 0 OK

Requirements

Development environment	Target platform	Hardware	PLC libraries to be linked
TwinCAT v2.11.0 build 2220 or higher (R3)	ARM	CX8080, CX8090, CX8091	TcSystemCX80xx.lib

FUNCTION F_CX8090_LED_ERR

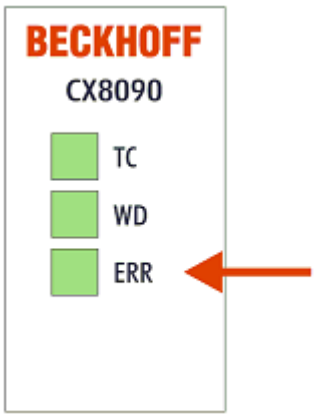

Since the CX8080, CX8090 and CX8091 supports different protocols, the two LEDs on the CX8080/CX809x are not used by the firmware. Hence, the user has the possibility to generate diagnostic messages himself, which must then also be documented for the end customer so that he can also interpret these messages. For example, you can use the LEDs to display whether the DHCP server has assigned an IP address to the CX8080/CX809x or, if you are using the RT-Ethernet with bus couplers such as the BK9000, you can display whether all BK9000s are in data exchange. Possible colors are red and green.

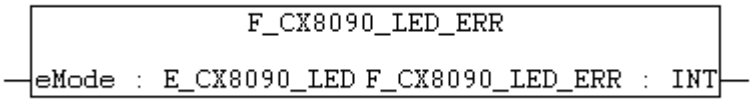

The F_CX8090_LED_ERR function uses the ERR LED on the CX8080/CX809x. Various colors and flash modes can be used here.

VAR_INPUT

```
VAR_INPUT
    eMode       : E_CX8090_LED;
END_VAR
```

eMode [▶ 48] : way in which the LED lights up.

VAR_OUTPUT

```
F_CX8090_LED_ERR       : INT;
```

F_CX8090_LED_WD : -1, non-implemented flash code, 0 OK

Requirements

Development environment	Target platform	Hardware	PLC libraries to be linked
TwinCAT v2.11.0 build 2220 or higher (R3)	ARM	CX8080, CX8090, CX8091	TcSystemCX80xx.lib

7.3.2 Data types

TYPE E_CX8090_LED

```
TYPE E_CX8090_LED : (
    eLED_GREEN_OFF,
    eLED_GREEN_ON,
    eLED_GREEN_FLASHING_Quick,
    eLED_GREEN_FLASHING_200ms,
    eLED_GREEN_FLASHING_500ms,
    eLED_GREEN_FLASHING_Pulse,
    eLED_RED_OFF:=20,
    eLED_RED_ON,
    eLED_RED_FLASHING_Quick,
    eLED_RED_FLASHING_200ms,
    eLED_RED_FLASHING_500ms,
    eLED_RED_FLASHING_Pulse,
    eLED_GREEN_RED_OFF:=100,
    eLED_GREEN_RED_FLASHING_200ms,
    eLED_GREEN_RED_FLASHING_500ms
);
END_TYPE
```

7.4 Diagnostics

7.4.1 FUNCTION F_CX80xx_ADDRESS

With this function the address selection switch or the DIP switch of the CX80xx device can be read out. Here, for example, you can activate different parts of the program depending on the address by reading the switch position.

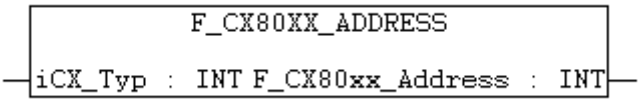

VAR_INPUT

```
VAR_INPUT
    iCX_Typ       : INT;
END_VAR
```

iCX_Typ : The CX type used is entered here - just the number without the designation CX: for example, CX8031 is then entered as 8031.

VAR_OUTPUT

```
F_CX80xx_ADDRESS     : INT;
```

F_CX80xx_ADDRESS : -1, non-implemented CX, address of the switch

Prerequisites

Development environment	Target platform	Hardware	PLC libraries to be linked
TwinCAT v2.11.0 build 2220 or higher (R3)	ARM	CX80xx	TcSystemCX80xx.lib

8 Ethernet X001 Interface

8.1 System introduction

8.1.1 Ethernet

Ethernet was originally developed by DEC, Intel and XEROX (as the "DIX" standard) for passing data between office devices. The term nowadays generally refers to the *IEEE 802.3 CSMA/CD* specification, published in 1985. Because of the high acceptance around the world this technology is available everywhere and is very economical. This means that it is easy to make connections to existing networks.

There are now a number of quite different transmission media: coaxial cable (10Base5), optical fiber (10BaseF) or twisted pairs (10BaseT) with screen (STP) or without screen (UTP). A variety of topologies such as ring, line or star can be constructed with Ethernet.

Ethernet transmits Ethernet packets from a sender to one or more receivers. This transmission takes place without acknowledgement, and without the repetition of lost packets. To achieve reliable data communication, there are protocols, such as TCP/IP, that can run on top of Ethernet.

MAC-ID

The sender and receiver of Ethernet packets are addressed by means of the MAC-ID. The MAC-ID is a 6 byte identification code unique to every Ethernet device in the world. The MAC-ID consists of two parts. The first part (i.e. the first 3 bytes) is a manufacturer identifier. The identifier for Beckhoff is 00 01 05. The next 3 bytes are assigned by the manufacturer and implement a unique serial number. The MAC-ID can, for example, be used for the BootP protocol in order to set the TCP/IP number. This involves sending a telegram containing the information such as the name or the TCP/IP number to the corresponding node. You can read the MAC-ID with the KS2000 configuration software.

The Internet Protocol (IP)

The internet protocol (IP) forms the basis of this data communication. IP transports data packets from one device to another; the devices can be in the same network, or in different networks. IP here looks after the address management (finding and assigning MAC-IDs), segmentation and routing. Like the Ethernet protocol, IP does not guarantee that the data is transported - data packets can be lost, or their sequence can be changed.

TCP/IP was developed to provide standardized, reliable data exchange between any number of different networks. TCP/IP is thus substantially independent of the hardware or software being used. Although the term is often used as if it were a single concept, a number of protocols are layered together: e.g. IP, TCP, UDP, ARP and ICMP.

Transmission Control Protocol (TCP)

The Transmission Control Protocol (TCP) which runs on top of IP is a connection-oriented transport protocol. It includes error detection and error handling mechanisms. Lost telegrams are repeated.

User Datagram Protocol (UDP)

UDP is connectionless transport protocol. It provides no control mechanism when exchanging data between sender and receiver. This results in a higher processing speed than, for example, TCP. Checking whether or not the telegram has arrived must be carried out by the higher-level protocol.

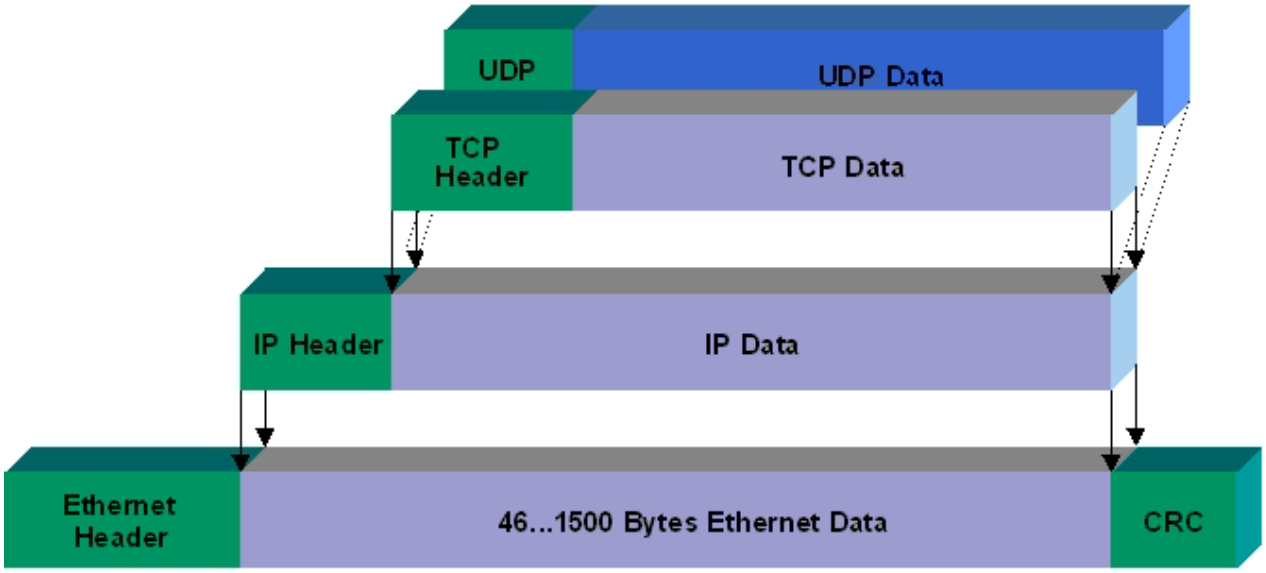

Fig. 2: Ethernet protocol

Protocols running on top of TCP/IP and UDP/IP

The following protocols can run on top of TCP/IP or UDP:

- ADS
- ModbusTCP

Both of these protocols are implemented in parallel on the Bus Coupler, so that no configuration is needed to activate the protocols.

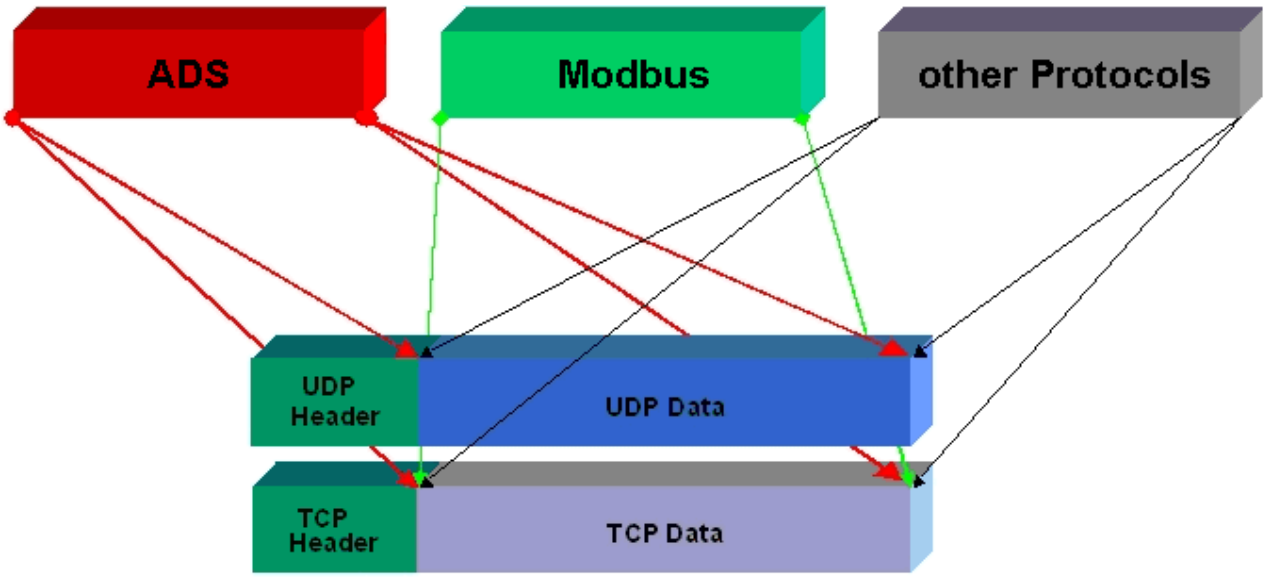

ADS can be used on top of either TCP or UDP, but ModbusTCP is always based on TCP/IP.

8.1.2 Topology example

CX8090 with peripheral Bus Couplers connected via RT Ethernet

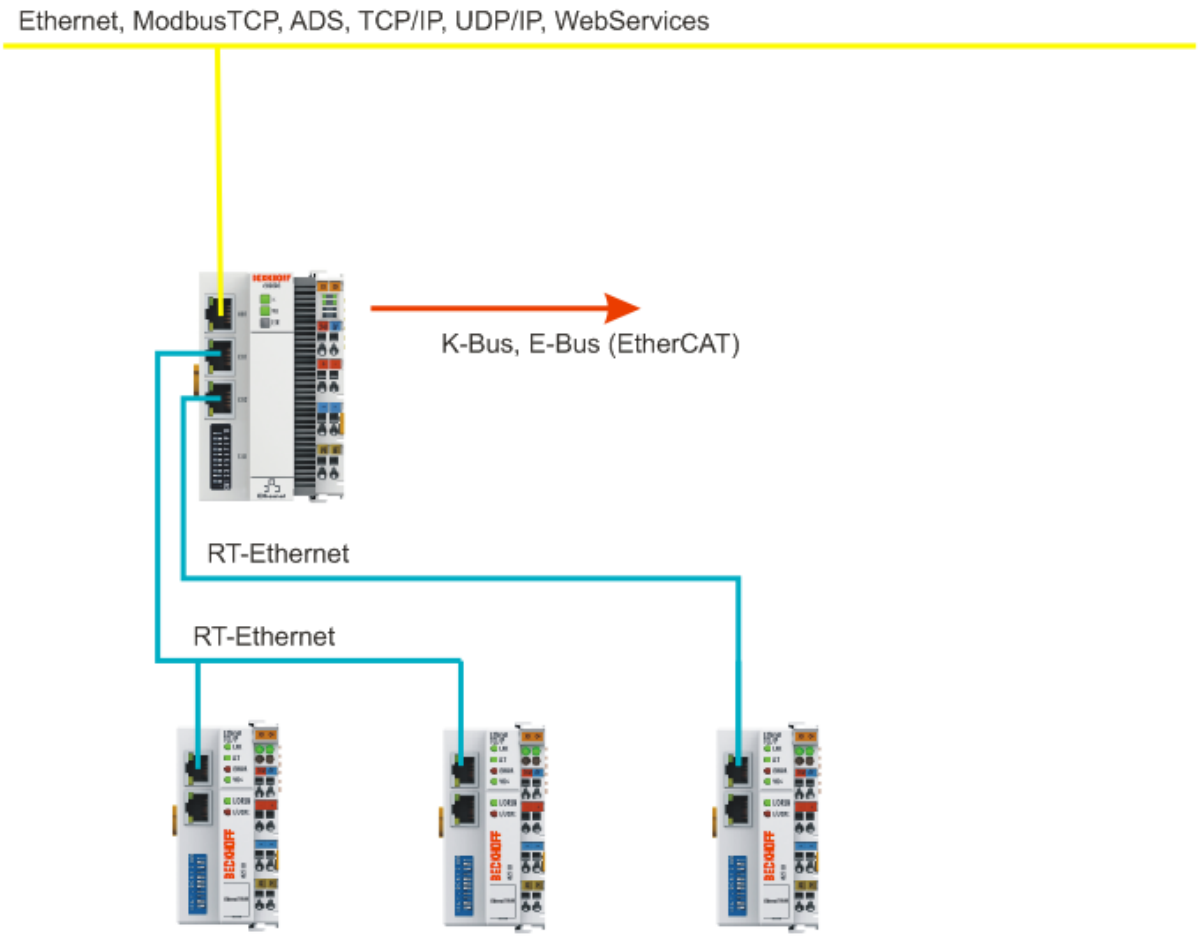

8.2 ModbusTCP

8.2.1 ModbusTCP Server - Overview

On the CX80xx you can exchange data over a very widespread protocol with the aid of the ModbusTCP. Use the documentation *TwinCAT ModbusTCP server* for this. The server is already installed on the CX80xx. The X001 or X101/102 interfaces may be used.

German: http://infosys.beckhoff.com/content/1031/tcmodbussrv/html/tcmodbussrv_overview.htm

English: http://infosys.beckhoff.com/content/1033/tcmodbussrv/html/tcmodbussrv_overview.htm

Note	**CX8091** The Modbus/TCP server is not part of the image of the CX8091.

Note	**Required libraries** The corresponding libraries are located in the TwinCAT\Lib directory on the MicroSD card and can be copied to the programming system using an SD card reader.

Note	**CX8010, CX803x, CX805x, CX8080, CX8093, CX8095** The Modbus TCP can only be used with the X001 interface.

8.2.2 ModbusTCP Protocol

The Ethernet protocol is addressed by means of the MAC-ID. The user does not normally need to be concerned about this address. The IP number has a length of 4 bytes, and must be parameterized by the user on the Bus Coupler and in the application. In ModbusTCP, the TCP port is set to 502. The UNIT can be freely selected under ModbusTCP, and does not have to be configured by the user.

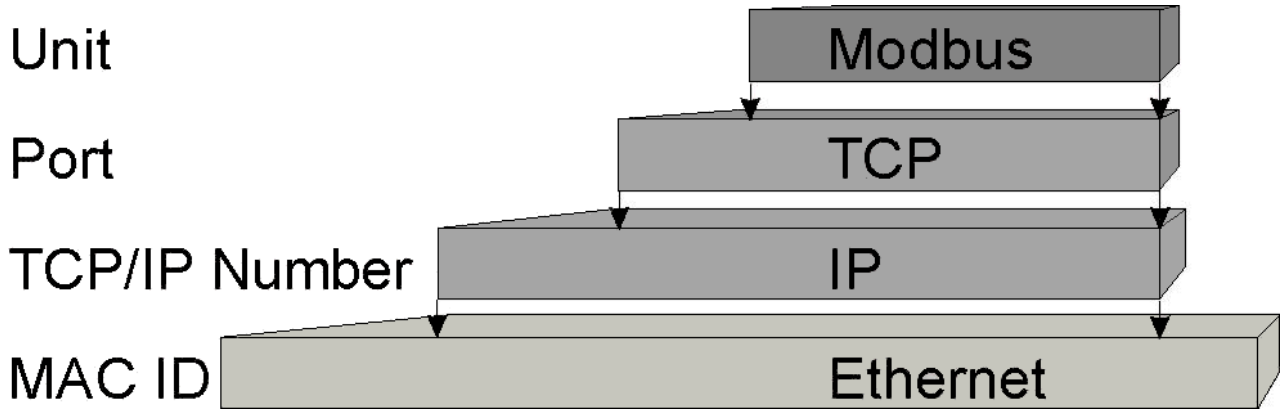

TCP port number

The TCP port number for ModbusTCP has been standardized to 502.

Modbus-Unit

The unit is returned by the slave.

ModbusTCP Protocol

Byte	Name	Description
0	Transaction identifier	Is returned by the slave
1	Transaction identifier	Is returned by the slave
2	Protocol identifier	always 0
3	Protocol identifier	always 0
4	Length field	0 (if the message is less than 256 bytes in length)
5	Length field	Number of following bytes
6	UNIT identifier	returned by the slave
7	Modbus	Modbus protocol with the function follows

8.2.3 Mapping between Modbus and ADS

The standard mapping of the server is illustrated in the following tables for the first runtime system:

Modbus ranges	Modbus address	ADS range	
Digital inputs	0x0000 - 0x7FFF	**Index group**	**Index offset**
		0xF021 - process image of the physical inputs (bit access)	0x0
	0x8000 - 0x80FF	**Name of the variables in the PLC program**	**Data type**
		.mb_Input_Coils	ARRAY [0..255] OF BOOL
Digital outputs (coils)	0x0000 - 0x7FFF	**Index group**	**Index offset**
		0xF031 - process image of the physical outputs (bit access)	0x0
	0x8000 - 0x80FF	**Name of the variables in the PLC program**	**Data type**
		.mb_Output_Coils	ARRAY [0..255] OF BOOL
Input registers	0x0000 - 0x7FFF	**Index group**	**Index offset**
		0xF020 - process image of the physical inputs	0x0
	0x8000 - 0x80FF	**Name of the variables in the PLC program**	**Data type**
		.mb_Input_Registers	ARRAY [0..255] OF WORD
Output registers	0x0000 - 0x2FFF	**Index group**	**Index offset**
		0xF030 - process image of the physical outputs	0x0
	0x3000 - 0x5FFF	0x4020 - PLC memory area	0x0
	0x6000 - 0x7FFF	0x4040 - PLC data area	0x0
	0x8000 - 0x80FF	**Name of the variables in the PLC program**	**Data type**
		.mb_Output_Registers	ARRAY [0..255] OF WORD

The server maps this to the individual ADS ranges and enables access to the physical process image and the PLC flag ranges.

The configurator enables the adaptation of the setting.

Default XML

The standard configuration looks like this:

```
<Configuration>
    <!-- Modbus TCP port, default = 502-->
    <Port>502</Port>
    <!-- optional IP configuration for Modbus TCP server-->
    <IpAddr/>
    <Mapping>
    <InputCoils>
        <MappingInfo>
        <!-- AdsPort: TwinCAT2 PLC1 = 801, PLC2 = 811...-->
        <AdsPort>801</AdsPort>
        <StartAddress>0</StartAddress>
        <EndAddress>32767</EndAddress>
        <!-- IndexGroup 61473 = 0xF021 -> physical plc inputs %IX -->
        <IndexGroup>61473</IndexGroup>
        <!-- Bit offset-->
        <IndexOffset>0</IndexOffset>
        </MappingInfo>
        <MappingInfo>
        <AdsPort>801</AdsPort>
        <!-- Modbus input coils -->
        <StartAddress>32768</StartAddress>
        <EndAddress>33023</EndAddress>
        <VarName>.mb_Input_Coils</VarName>
```

```
        </MappingInfo>
    </InputCoils>
    <OutputCoils>
        <MappingInfo>
        <AdsPort>801</AdsPort>
        <EndAddress>32767</EndAddress>
        <!-- IndexGroup 61489 = 0xF031 -> physical plc outputs %QX -->
        <IndexGroup>61489</IndexGroup>
        <!-- Bit offset-->
        <IndexOffset>0</IndexOffset>
        </MappingInfo>
        <MappingInfo>
        <AdsPort>801</AdsPort>
        <!-- Modbus output coils-->
        <StartAddress>32768</StartAddress>
        <EndAddress>33023</EndAddress>
        <VarName>.mb_Output_Coils</VarName>
        </MappingInfo>
    </OutputCoils>
    <InputRegisters>
        <MappingInfo>
        <AdsPort>801</AdsPort>
        <StartAddress>0</StartAddress>
        <EndAddress>32767</EndAddress>
        <!-- IndexGroup 61472 = 0xF020 -> physical plc input register %I -->
        <IndexGroup>61472</IndexGroup>
        <!-- Byte offset-->
        <IndexOffset>0</IndexOffset>
        </MappingInfo>
        <MappingInfo>
        <AdsPort>801</AdsPort>
        <!-- Modbus input registers -->
        <StartAddress>32768</StartAddress>
        <EndAddress>33023</EndAddress>
        <VarName>.mb_Input_Registers</VarName>
        </MappingInfo>
    </InputRegisters>
    <OutputRegisters>
        <MappingInfo>
        <AdsPort>801</AdsPort>
        <StartAddress>0</StartAddress>
        <EndAddress>12287</EndAddress>
        <!-- IndexGroup 61488 = 0xF030 -> physical plc output register %Q -->
        <IndexGroup>61488</IndexGroup>
        <!-- Byte offset-->
        <IndexOffset>0</IndexOffset>
        </MappingInfo>
        <MappingInfo>
        <AdsPort>801</AdsPort>
        <StartAddress>12288</StartAddress>
        <EndAddress>24575</EndAddress>
        <!-- IndexGroup 16416 = 0x4020 -> plc memory area %M -->
        <IndexGroup>16416</IndexGroup>
        <!-- Byte offset-->
        <IndexOffset>0</IndexOffset>
        </MappingInfo>
        <MappingInfo>
        <AdsPort>801</AdsPort>
        <StartAddress>24576</StartAddress>
        <EndAddress>32767</EndAddress>
        <!-- IndexGroup 16448 = 0x4040 -> plc data area -->
        <IndexGroup>16448</IndexGroup>
        <!-- Byte offset-->
        <IndexOffset>0</IndexOffset>
        </MappingInfo>
        <MappingInfo>
        <AdsPort>801</AdsPort>
        <!-- Modbus output registers -->
        <StartAddress>32768</StartAddress>
        <EndAddress>33023</EndAddress>
        <VarName>.mb_Output_Registers</VarName>
        </MappingInfo>
    </OutputRegisters>
    </Mapping>
</Configuration>
```

8.3 TCP/IP

Server overview

Via the CX80x0 you can also implement your own protocols with the help of the TCP/IP server. Use the documentation *TwinCAT TCP/IP Server* for this.
The TCP/IP server is already pre-installed on the CX80x0. Only the X001 or X101/102 interfaces may be used.

German: http://infosys.beckhoff.com/content/1031/tcpipserver/html/tcpipserver_overview.htm

English: http://infosys.beckhoff.com/content/1033/tcpipserver/html/tcpipserver_overview.htm

Note	**CX8091** The TCP/IP server is not part of the image of the CX8091.

Note	**Required libraries** The corresponding libraries are located in the TwinCAT\Lib directory on the MicroSD card and can be copied to the programming system using an SD card reader.

Note	**CX8010, CX803x, CX805x, CX8080, CX8093, CX8095** The TCP/IP server can only be used with the X001 interface.

8.4 Real-time Ethernet

Real-time communication can take place only via ports X101 and X102.
See technical data: CX8090_TechnDataEthernet [▶ 16]

RT-Ethernet for communication with further slaves such as the BK9100 can take place on the CX8090.
See CX8090_RT_Ethernet [▶ 34] regarding this.

The EtherCAT Automation Protocol (EAP) is used for communication from controller to controller. Hence Beckhoff controller such as CX or IPCs can exchange data with one another.

See CX8090 EAP [▶ 35] regarding this.

8.5 ADS-Communication

Communication

The ADS protocol (ADS: Automation Device Specification) is a transport layer within the TwinCAT system. It was developed for data exchange between the different software modules, for instance the communication between the NC and the PLC. This protocol enables communication with other tools from any point within the TwinCAT. If communication with other PCs or devices is required, the ADS protocol can use TCP/IP as a basis. Within a networked system it is thus possible to reach all data from any point.

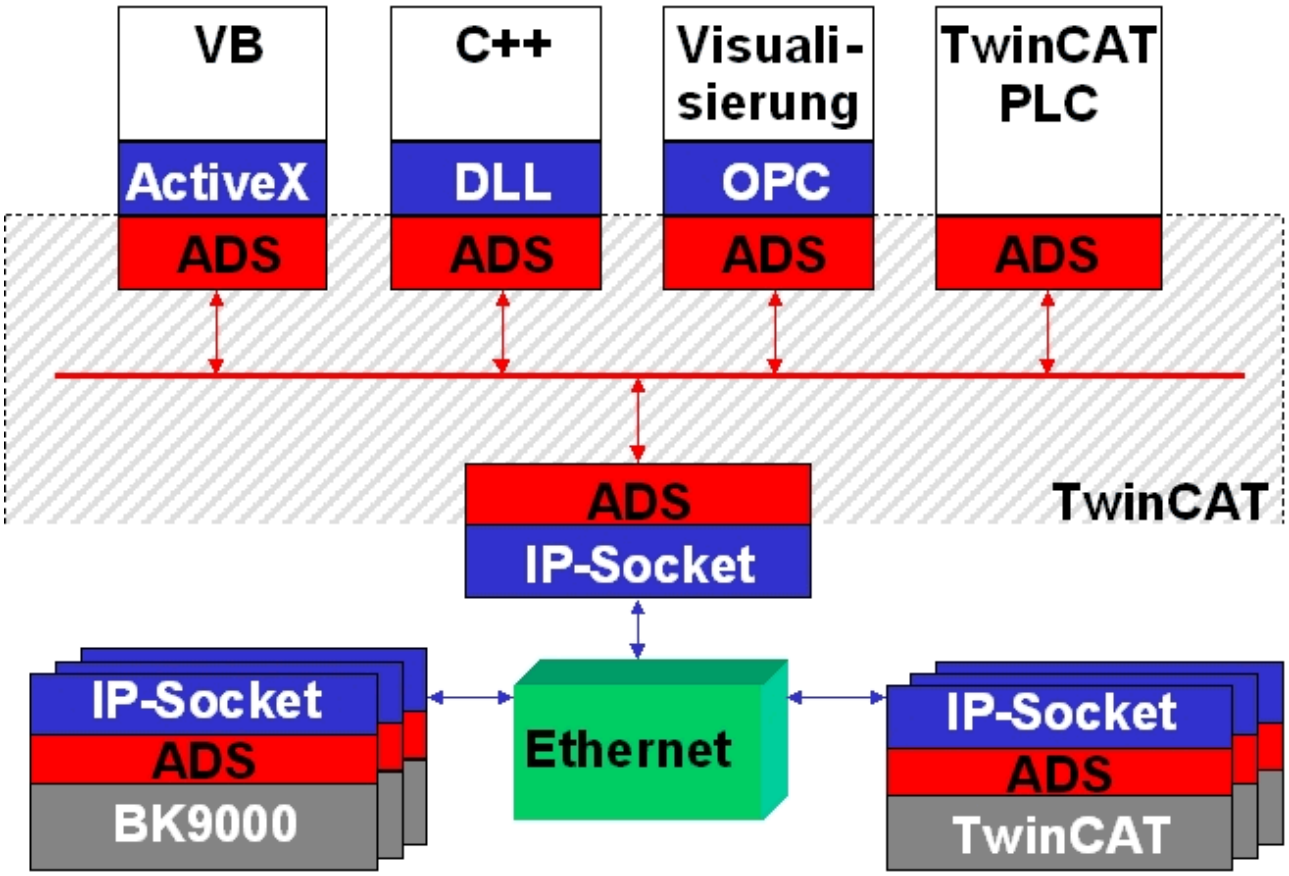

The ADS protocol runs on top of the TCP/IP or UDP/IP protocols. It allows the user within the Beckhoff system to use almost any connecting route to communicate with all the connected devices and to parameterize them. Outside the Beckhoff system a variety of methods are available to exchange data with other software tools.

Software interfaces

ADS-OCX
The ADS-OCX is an Active-X component. It offers a standard interface to, for instance, Visual Basic, Delphi, etc.

ADS-DLL
You can link the ADS-DLL (DLL: Dynamic Link Library) into your C program.

OPC
The OPC interface is a standardized interface for communication used in automation engineering. Beckhoff offer an OPC server for this purpose.

Protocol

The ADS functions provide a method for accessing the Bus Coupler information directly from the PC. ADS function blocks can be used in TwinCAT PLC Control for this. The function blocks are contained in the *PLCSystem.lib* library. It is also equally possible to call the ADS functions from AdsOCX, ADSDLL or OPC.

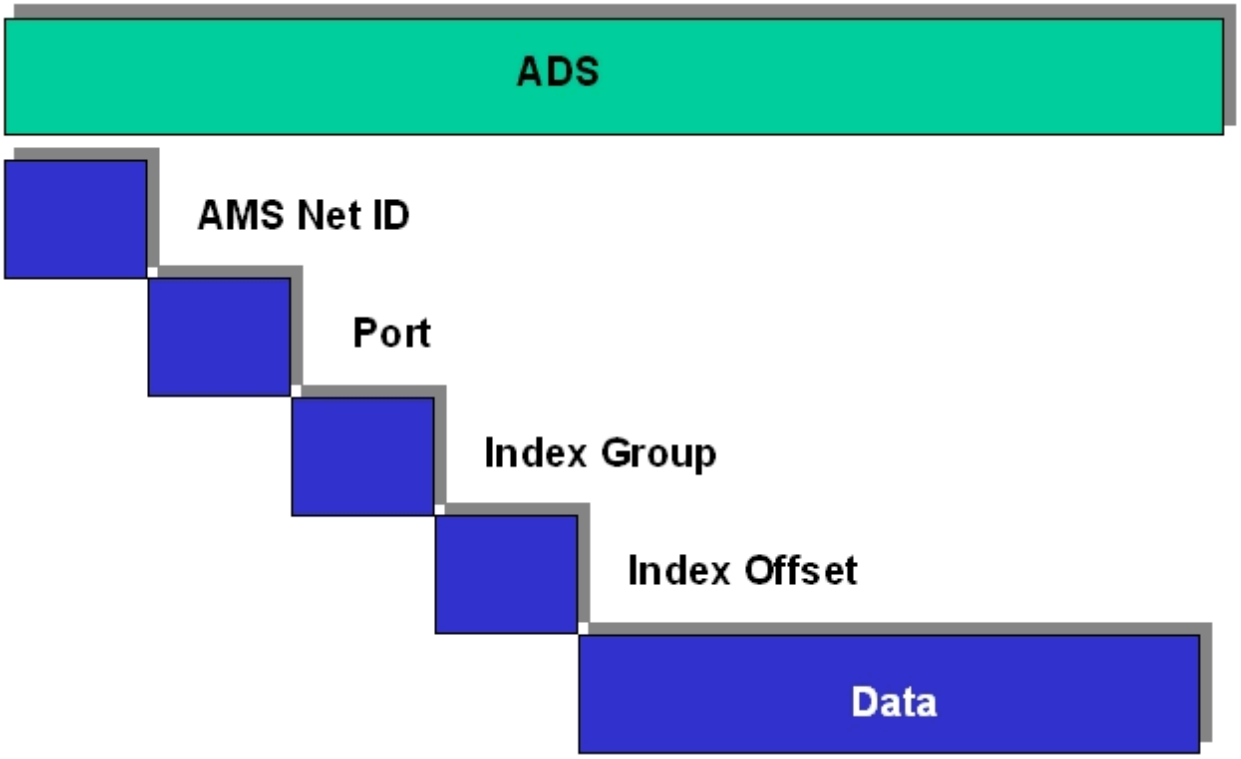

AMSNetID
The AMSNetID provides a reference to the device that is to be addressed. This is taken from the MAC address of the first Ethernet port (X001) and is printed on the side of the CX80xx. For the AMSNetID the bytes 3 to 6 plus ".1.1" are typically used.
Example:
MAC address 00-01-**05-01-02-03**
AMSNetID 5.1.2.3.1.1

Port number
The port number distinguishes sub-elements in the connected device.
Port 801: local process data PLC runtime 1

Index group
The index group distinguishes different data within a port.

Index offset
Indicates the offset, the byte from which reading or writing is to start.

Len
Gives the length of the data, in bytes, that is to be read or written.

TCP port number
The TCP port number for the ADS protocol is 48898 or 0xBF02.

9 Error handling and diagnosis

9.1 Diagnostic LEDs

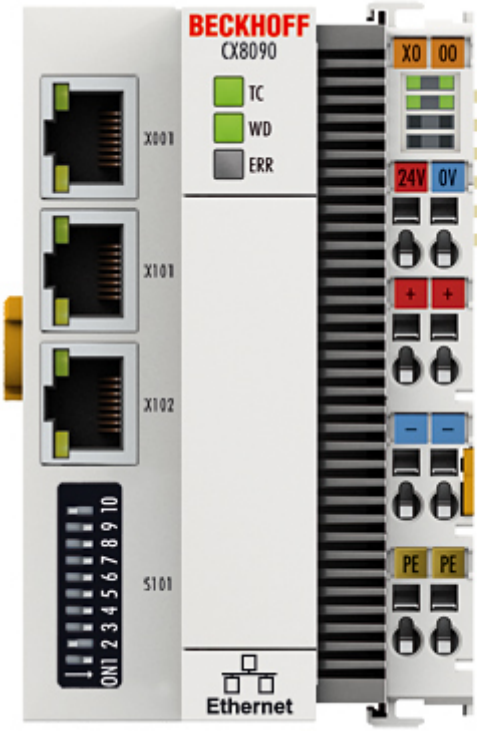

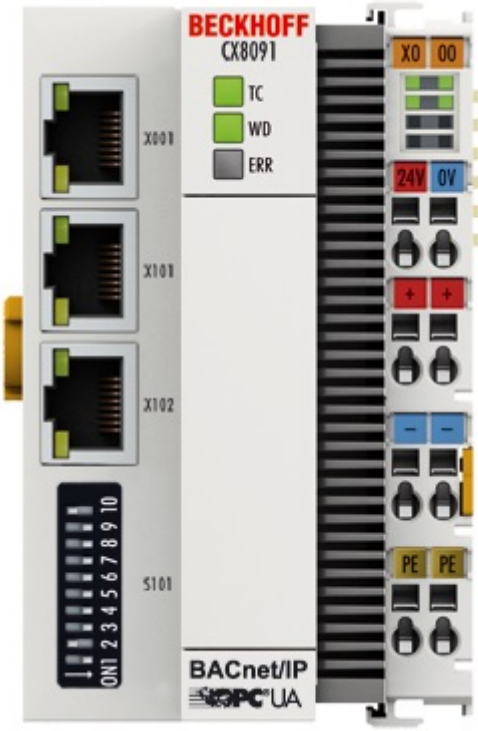

Ethernet interface X001

Interface X001	Ethernet (CX8090, CX8091)	Meaning
LED green	on	Link present
LED yellow	flashing	Activity

Ethernet interface X101 and X102

Interface X101-102	Ethernet (CX8090, CX8091)	Meaning
LED green	flashing	Activity
LED yellow	is not used	-

LED coupler

Labelling	Meaning	Colour	Meaning
TC	Displays the TwinCAT mode	red	TwinCAT in Stop
		green	TwinCAT in Running Mode
		Blue	TwinCAT in Config Mode
WD*	no function	-	-
ERR*	Error or Boot Diagnosis LED	red when switching on	Software is being loaded
		off	Everything OK

* The WD and ERR LED can be set and used by function block.

LED power supply terminal

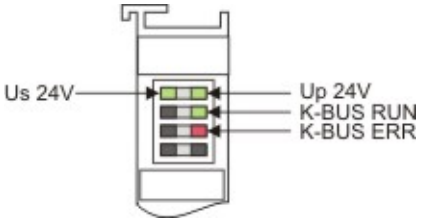

Operation with K-bus terminals

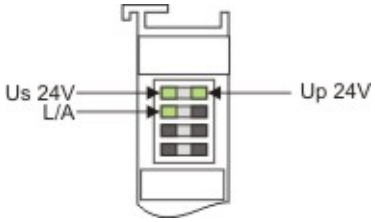

Operation with E-bus terminals

Display LED	Description	Meaning
1 Us 24 V (top left, 1st row)	CX80xx supply voltage	connected to -24 V
2 Up 24 V (top right, 1st row)	Power contacts supply voltage	connected to -24 V
3 L/A (left centre, 2nd row)	EtherCAT LED	flashing green: EtherCAT communication active connected to E-bus / no data traffic not connected to E-bus
4 K-BUS RUN (right centre, 2nd row)	K-bus LED RUN	Lights up green: K-bus running, everything OK
6 K-BUS ERR (bottom right, 3rd row)	K-bus LED ERR	Lights up red: K-bus error - see K-bus error code

K-bus error code

Error code	Error code argument	Description	Remedy
Persistent, continuous flashing		EMC problems	• Check power supply for undervoltage or overvoltage peaks • Implement EMC measures • If a K-Bus error is present, it can be localized by a restart of the coupler (by switching it off and then on again)
3 pulses	0	K-Bus command error	- No Bus Terminal inserted - One of the Bus Terminals is defective; halve the number of Bus Terminals attached and check whether the error is still present with the remaining Bus Terminals. Repeat until the defective Bus Terminal is located.
4 pulses	0	K-Bus data error, break behind the Bus Coupler	Check whether the n+1 Bus Terminal is correctly connected; replace if necessary.
	n	Break behind Bus Terminal n	Check whether the Bus End Terminal 9010 is connected.
5 pulses	n	K-Bus error in register communication with Bus Terminal n	Exchange the nth bus terminal
6 pulses	0	Error at initialization	Exchange Bus Coupler
	1	Internal data error	Perform a hardware reset on the Bus Coupler (switch off and on again)
	8	Internal data error	Perform a hardware reset on the Bus Coupler (switch off and on again)
7 pulses	0	Process data length is not correct	Check the configuration and the K-Bus terminals
	1..n	K-Bus Reset error	Check the K-Bus terminals

10 Appendix

10.1 First steps

The following components are necessary for the first steps

- PC with TwinCAT 2.11 R3
- Ethernet cable
- Power supply (24 V_{DC}), cabling material
- a KL2xxx or an EL2xxx, digital output terminal, end terminal

Note	**Required TwinCAT version** TwinCAT 2.11 R3 is required for the programming of the CX80xx series. Older TwinCAT versions and TwinCAT 3.x are not supported!

1. Connect K-bus or E-bus terminals to the controller.

2. Connect voltage to the CX80xx (see power supply [▶ 21]).

3. Connect Ethernet (CX80xx X001) to your network or a direct connection to your PC (make sure in the case of a peer-to-peer connection that the IP addressing in your PC is set to DHCP).

4. Wait a while, approx. 1 to 2 minutes; either the CX80xx will be assigned an address by the DHCP server (usually fast) or, if it does not find a DHCP server, it uses a local IP address.

5. Switch on TC on the PC in Config Mode (TwinCAT icon blue) and start the System Manager

6. In the System Manager, click on the PC symbol (Choose Target System) or press >F8<

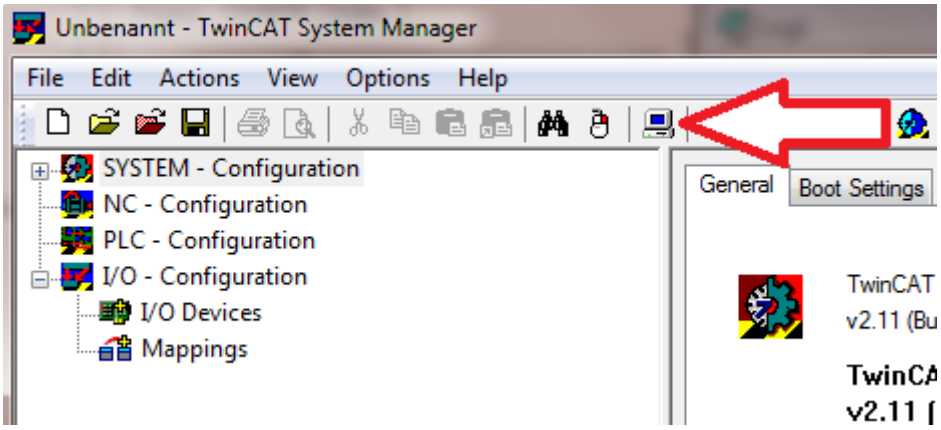

7. The following dialog box opens; click on Search (Ethernet).

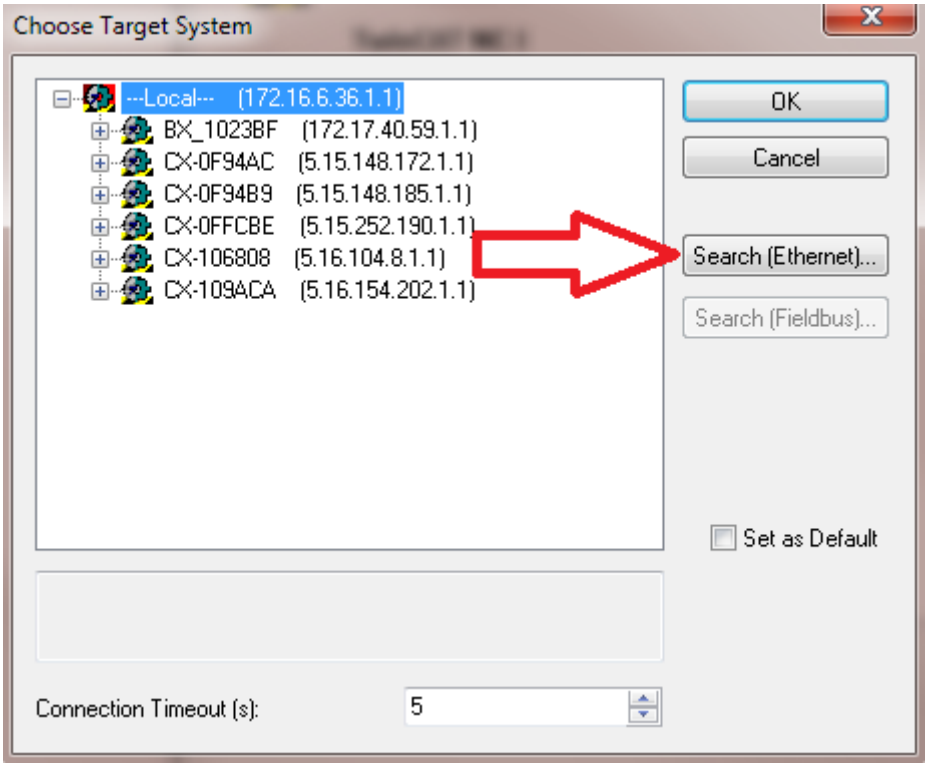

8. Select Option 1 if you have addressed via DHCP or Option 2 in case of DHCP or local IP address. Then click on "Broadcast search".

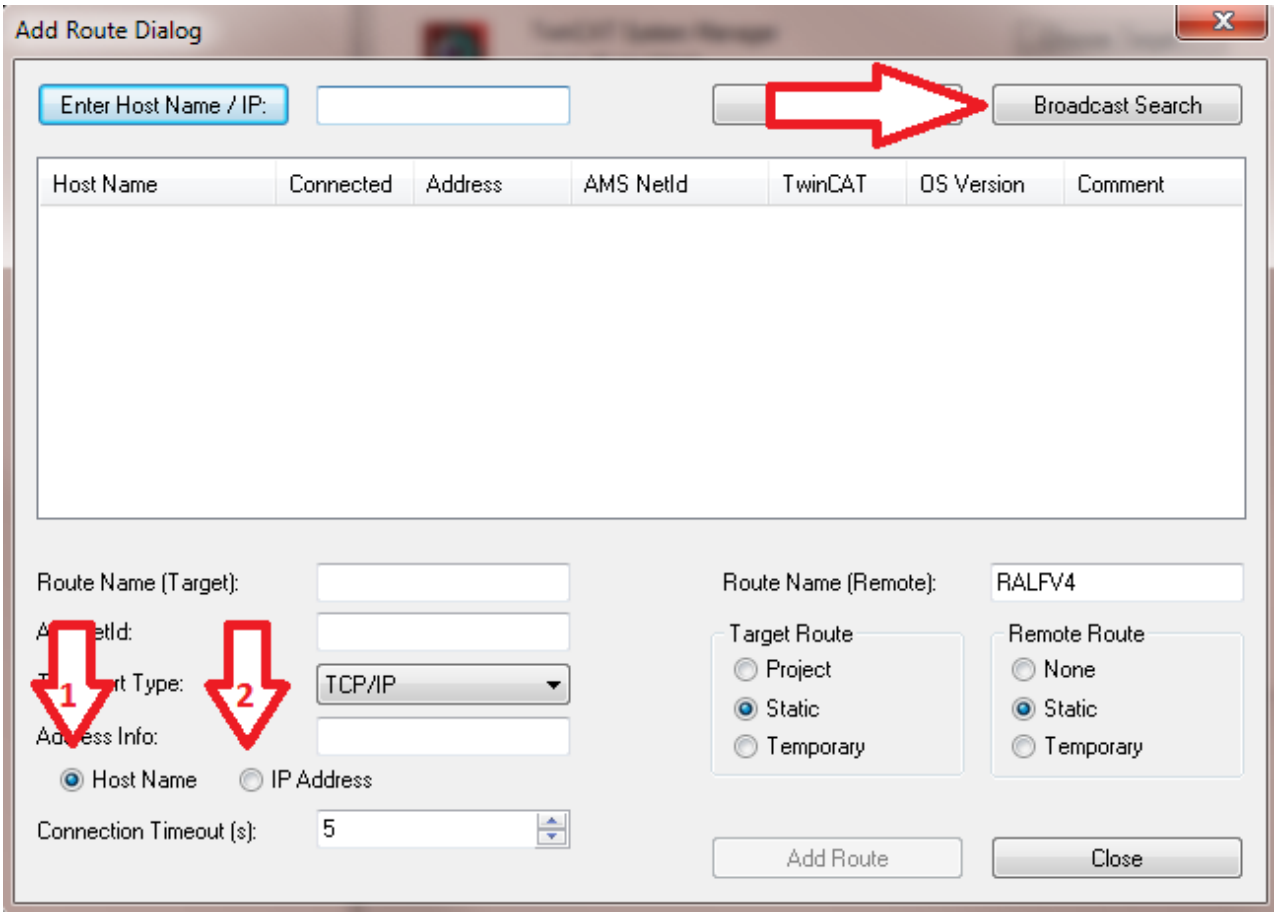

Your network is scanned for Beckhoff controllers. If none is found, this means that the DHCP of the controller is not yet completed or the network settings on your PC are incorrect. A network cable that has not been connected can naturally also be the cause, but this should not be the case if point 3 has been done.

9. The host name is composed by default of "CX" and the last 3 bytes of the MAC address. You can find the MAC address on the side of the CX80xx. The MAC address is always 6 bytes long and the first three bytes are the vendor ID, which is always 00 01 05 in the case of Beckhoff devices.

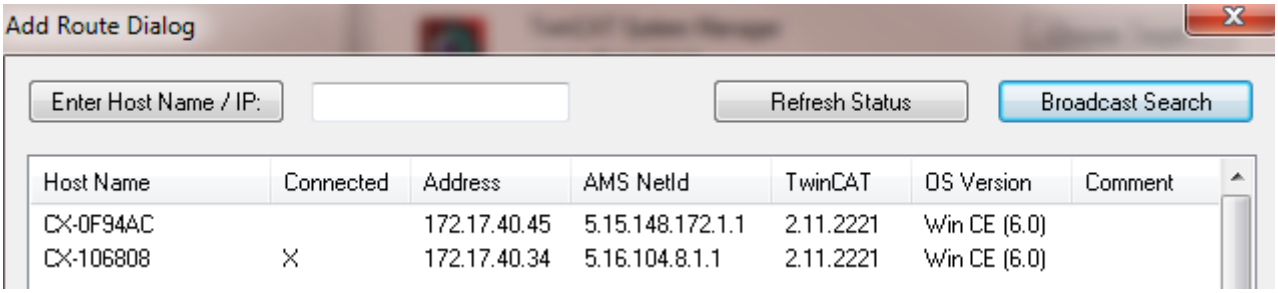

An "X" next to *Connected* means that the CX is already known in the system and can be used. To make it known, click in the list on the CX with which you want to connect and then click on "Add route". An input mask opens with "User name" and "Password". By default there is no password, simply confirm by clicking on OK. Afterwards the "X" should appear next to *connected*.

10. Next, the CX should appear in the list of the devices; select it and confirm by clicking on OK.

11. Check whether the connection is there. In the System Manager in the bottom right-hand corner. It must be blue or green and may **not** be yellow.

12. If the setting is green, switch the CX to Config Mode with "Shift F4" or click on the blue TC icon in the System Manager. The System Manager now asks you whether you really want to switch to Config Mode; confirm by clicking on OK.

13. The setting at the bottom right must now change to blue and the TC LED on the CX80xx must now also light up blue.

14. Now click on I/O Devices and then on Scan Devices...

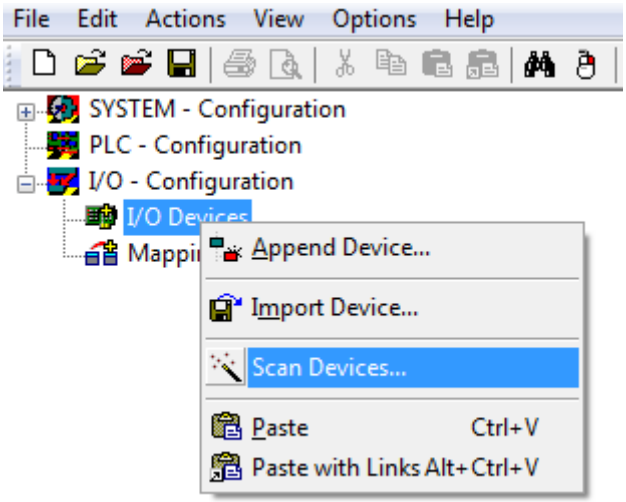

15. A message appears, informing you that not everything will be automatically detected.

16. The CCAT interface is usually found (CX8090) or the corresponding fieldbus interface (other CX80xx devices) and either a K-bus interface or an EtherCAT interface, depending now on which terminals you have connected to the CX. The CCAT interface must be present in the System Manager file and may not be deleted. If an error message should appear when scanning, check the revision level of your TwinCAT version and perform an update if necessary.

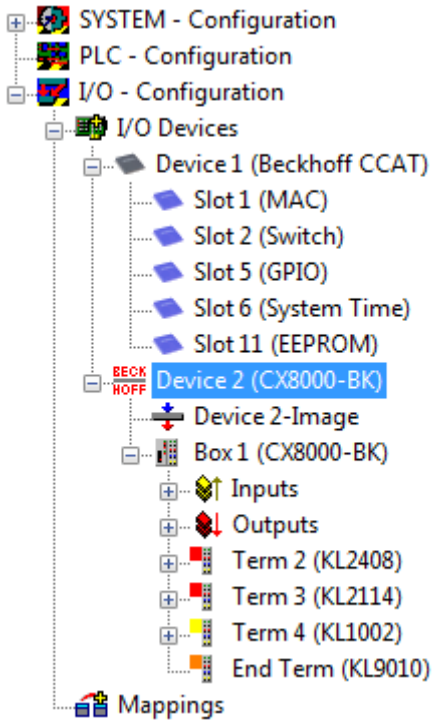

17. Now we come to the programming. To do this, open the PLC Control and select File -> New. The PLC Control asks you for the target system. Select CX (ARM). Afterwards it asks you for the function block; set the ST language (structured text). Now write a small program...

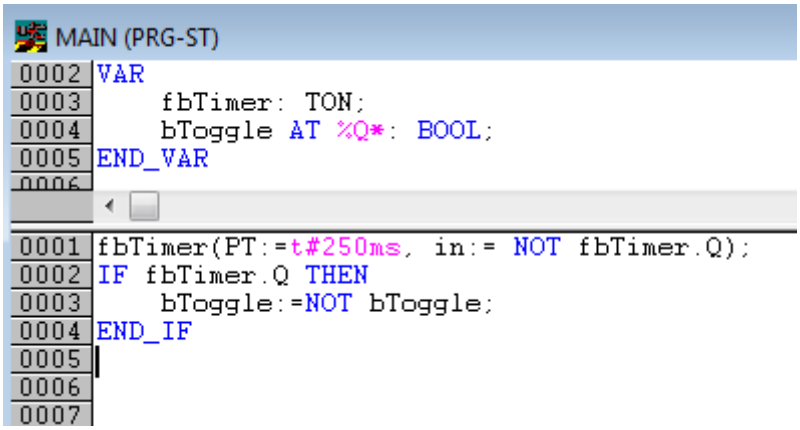

Translate the program. If it is error free (a warning must come, that it is OK) save the project under an arbitrary name, translate it again and save it once **again**.

18: Switch once again to the System Manager and add the program under PLC - Configuration. A FileName.typ file is sought.

19: Now open the project, then the task and then outputs, in which there must be a variable MAIN.bToggle. You can link this with the hardware. To do this, click on "Linked to...".

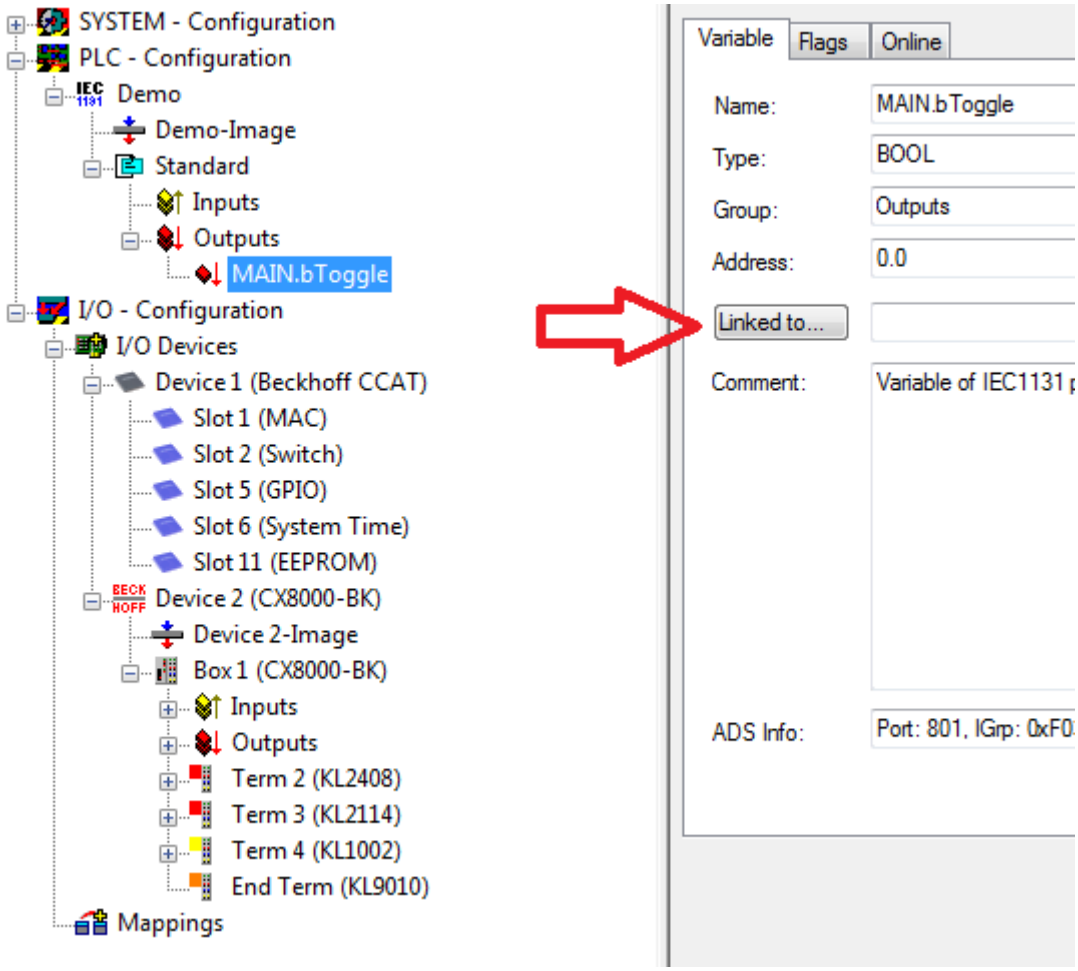

Select a digital output. Now you can download the configuration to the CX and switch the CX to Run Mode. To do this, click on the ‘cube’ or press Ctrl + Shift + F4. The TC LED on the CX must then light up green.

20. Switch back to PLC Control, go to "Online/Selection of the target system", select the correct CX, click on it and select runtime system 1. Now "Online/login" again (F11) transfer the PLC program, then "Online/ Start" (F5). The LED on your terminal must now flash.

21. As a final step Online/Generate a boot project. This completes the project and your first program is stored on the CX.

Congratulations, the foundations have now been laid and are ready to be built on. We wish you every success!

10.2 Image Update

There are two different possibilities to update the image of the CX80xx.

Note	**Prerequisites** • Please make sure before the update that your CX80xx supports the image that you want to load. • When updating the image, please first update all existing files and only then copy the new image.

Always copy all files and directories in order to update a CX80xx.

Licenses	30.07.2012 13:40	Dateiordner	
RegFiles	30.07.2012 13:40	Dateiordner	
System	30.07.2012 13:40	Dateiordner	
TwinCAT	30.07.2012 13:40	Dateiordner	
UPnP	30.07.2012 13:40	Dateiordner	
www	30.07.2012 13:40	Dateiordner	
CX8000_CE600_LF_v351b_TC211R3_B2226	24.11.2011 13:50	Datei	0 KB
NK.bin	30.07.2012 12:39	VLC media file (.bi...	13.477 KB

Update via USB

CAUTION	**USB port as ignition source in potentially explosive atmospheres** Gases or dusts can be ignited by a spark discharge when the USB port is used. Switch off the power supply and wait until the 1-second UPS has discharged. Ensure that there is no explosive atmosphere before you use the USB port.

A USB cable is required for this!

- Switch off the CX80xx

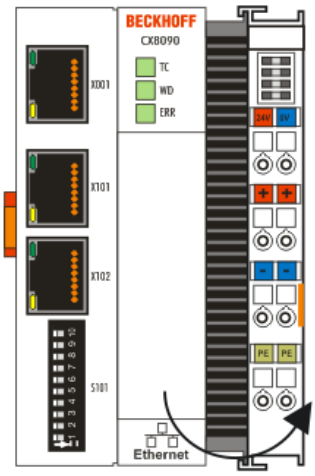

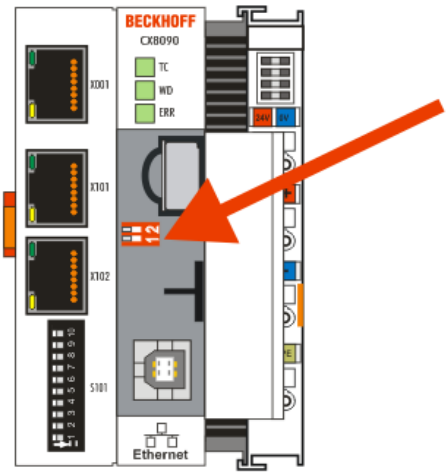

- Set red Dip switch (under the flap) DIP 1 to ON
- Switch on the CX
- Connect the PC with USB
- Delete all files (we recommend that you backup all files first), no formatting

- Wait until copying has finished, then remove the USB cable
- Switch DIP switch 1 to OFF
- Switch off the CX80xx
- Switch on the CX80xx; it may take a little longer the first time

Update the MicroSD card

A MicroSD card reader is required for this!

- Remove the MicroSD card from the switched-off CX device.
- Insert the MicroSD card into the reader
- Delete all files (we recommend that you backup all files first), no formatting
- Load the new image
- Wait until copying has finished, then remove the MicroSD card
- Insert the MicroSD card into the SD slot of the switched-off CX again
- Now switch on the CX again; it may take a little longer the first time

10.3 Example of Web Visualization, IP address and fieldbus LEDs

The attached example shows how the IP address of the CX8090 is read out and how its fieldbus LEDs WD and ERR are used.

Download Zip-File :
https://infosys.beckhoff.com/content/1033/cx8090_hw/Resources/zip/2038780555.zip

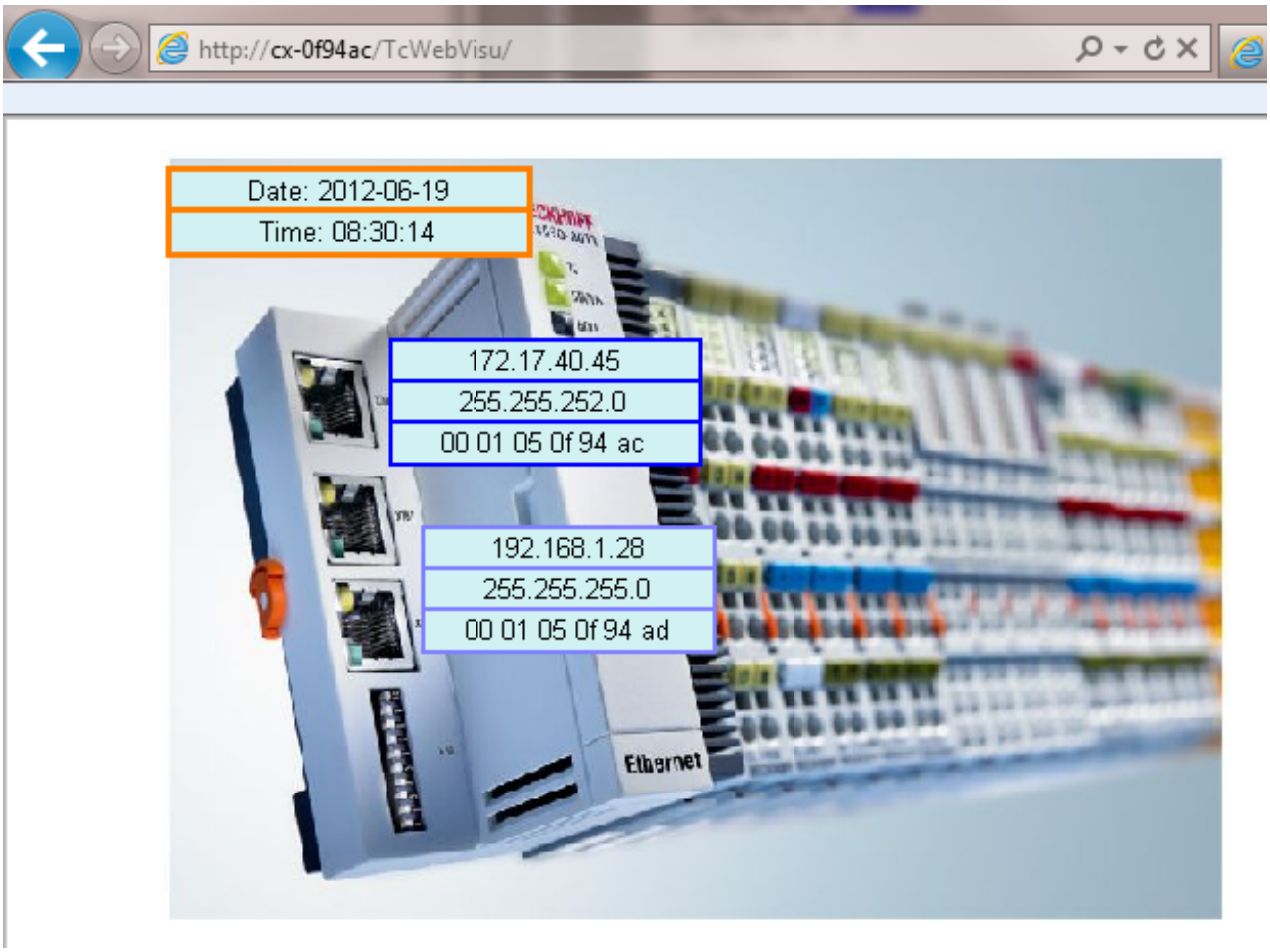

10.4 Certification

10.4.1 Ex

The CX8xxx Embedded PCs, which are certified for use in potentially explosive atmospheres, have the following IDs:

II 3 G Ex nA IIC T4 Gc

II 3 D Ex tc IIIC T135 ºC Dc

DEKRA 16ATEX0052 X
Ta: 0°C-55°C

Serial number

The name plate of the CX8xxx Embedded PCs shows a consecutive serial number, a hardware version and a date of manufacture:

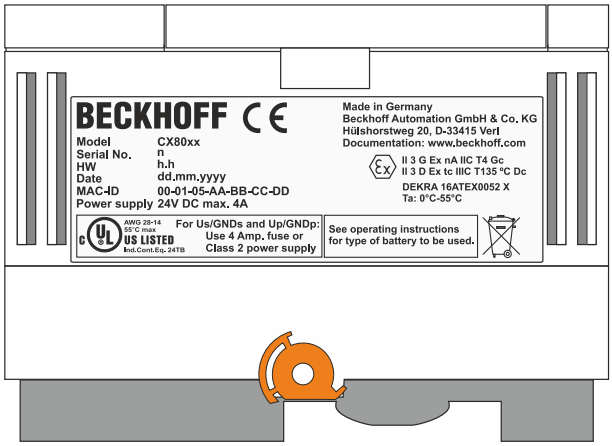

Legend:

n:	Serial number, consecutive number
h:	Hardware version, ascending number
dd:	Production day
mm:	Production month
yyyy:	Production year

10.4.2 FCC

FCC Approvals for the United States of America

FCC: Federal Communications Commission Radio Frequency Interference Statement

This equipment has been tested and found to comply with the limits for a Class A digital device, pursuant to Part 15 of the FCC Rules. These limits are designed to provide reasonable protection against harmful interference when the equipment is operated in a commercial environment. This equipment generates, uses, and can radiate radio frequency energy and, if not installed and used in accordance with the instruction manual, may cause harmful interference to radio communications. Operation of this equipment in a residential area is likely to cause harmful interference in which case the user will be required to correct the interference at his own expense.

FCC Approval for Canada

FCC: Canadian Notice

This equipment does not exceed the Class A limits for radiated emissions as described in the Radio Interference Regulations of the Canadian Department of Communications.

10.4.3 UL

The UL-certified CX8xxx Embedded PCs have the following IDs:

Compliance with UL requirements:

Compliance with the following UL requirements is required, in order to guarantee the UL certification for the CX8xxx Embedded PC:

- The Embedded PCs must not be connected to unlimited voltage sources.
- Embedded PCs may only be supplied from a 24 V DV voltage source. The voltage source must be insulated and protected with a fuse of maximum 4 A (corresponding to UL248).
- Or the power supply must originate from a voltage source that corresponds to NEC class 2. An NEC class 2 voltage source must not be connected in series or parallel with another NEC class 2 voltage source.

10.5 Support and Service

Beckhoff and their partners around the world offer comprehensive support and service, making available fast and competent assistance with all questions related to Beckhoff products and system solutions.

Beckhoff's branch offices and representatives

Please contact your Beckhoff branch office or representative for local support and service on Beckhoff products!

The addresses of Beckhoff's branch offices and representatives round the world can be found on her internet pages:
http://www.beckhoff.com

You will also find further documentation for Beckhoff components there.

Castel Maggiore (BO) 40013
Via Lirone 60/i

e-mail: info@eurotecsrl.com
Tel: +39 051/6321595
Website: www.eurotecsrl.com

C.F.: 04103780377
P.I.: 01596581205