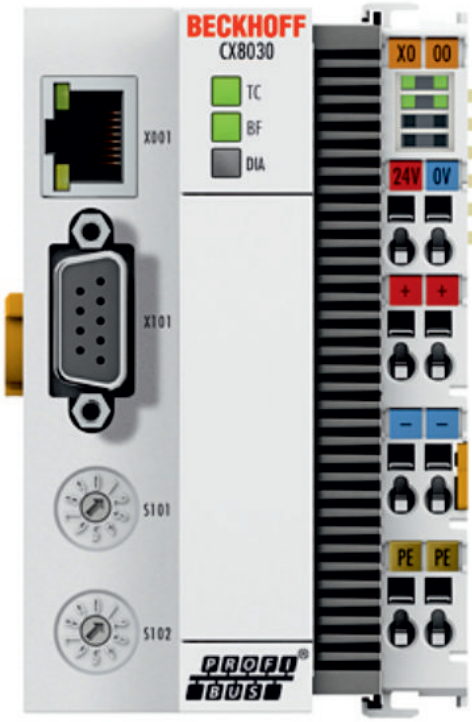

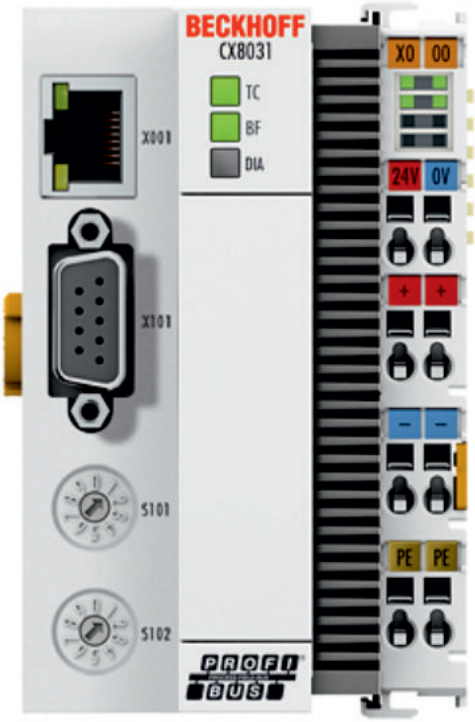

Manual

CX8030 / CX8031

CX8030 PROFIBUS-Master / CX8031 PROFIBUS-Slave

EUROTEC
TECNOLOGIE IMPIANTISTICHE - AUTOMAZIONE - TELECONTROLLO

BECKHOFF

Table of contents

1 Notes on the documentation ... 5
1.1 Explanation of symbols ... 6
1.2 Documentation issue status ... 7

2 For your safety ... 8
2.1 Intended use ... 8
2.2 Staff qualification ... 9
2.3 Safety instructions ... 9

3 Transport and storage ... 11

4 Product overview ... 12
4.1 CX80xx - System overview ... 12
4.2 CX8030, CX8031 - Introduction ... 14
4.3 Technical data ... 16
4.4 Technical data - PROFIBUS ... 17
4.5 CX80xx - MicroSD cards ... 19

5 Mounting and wiring ... 20
5.1 Mounting ... 20
5.1.1 Dimensions ... 20
5.1.2 Installation on mounting rails ... 20
5.2 Wiring ... 23
5.2.1 Power supply ... 23
5.2.2 Ethernet ... 25
5.2.3 PROFIBUS ... 27
5.3 Changing the battery ... 31

6 Parameterization and commissioning ... 32
6.1 DIP switch ... 32
6.2 Setting the IP adress ... 34
6.2.1 IP address ... 34
6.2.2 Setting the address via DHCP server ... 34
6.2.3 Subnet mask ... 34
6.3 Configuration ... 36
6.3.1 CX80xx - Operating system ... 36
6.3.2 Power supply terminal ... 38
6.3.3 PROFIBUS ... 40
6.3.4 Web Services ... 45
6.3.5 Real Time Clock (RTC) ... 47
6.3.6 1-second UPS (Uninterruptible Power Supply) ... 48
6.3.7 CPU load ... 49

7 Programming ... 50
7.1 Library for CX80xx ... 50
7.2 Seconds UPS ... 50
7.2.1 Function blocks ... 50
7.2.2 Data types ... 53
7.3 Diagnostics ... 54
7.3.1 FUNCTION F_CX80xx_ADDRESS ... 54
7.4 PROFIBUS ... 54
7.4.1 CX8030 ... 54

7.4.2 CX8031 ... 62

8 Ethernet X001 Interface ... 68

8.1 System introduction ... 68

8.1.1 Ethernet ... 68

8.1.2 Topology example ... 70

8.2 ADS-Communication ... 71

9 PROFIBUS ... 73

9.1 System overview PROFIBUS ... 73

9.2 Fieldbus Overview ... 76

9.3 PROFIBUS DP ... 80

9.4 PROFIBUS DPV1 ... 81

9.5 Cables, Plugs and Switches ... 82

9.6 Topology ... 85

10 Error handling and diagnosis ... 86

10.1 LED indicators ... 86

11 Appendix ... 89

11.1 First steps ... 89

11.2 Image Update ... 94

11.3 Certification ... 96

11.3.1 Ex ... 96

11.3.2 FCC ... 97

11.3.3 UL ... 97

11.4 Bibliography ... 98

11.5 List of Abbreviations ... 99

11.6 Support and Service ... 100

1 Notes on the documentation

This description is only intended for the use of trained specialists in control and automation engineering who are familiar with the applicable national standards.
It is essential that the documentation and the following notes and explanations are followed when installing and commissioning the components.
It is the duty of the technical personnel to use the documentation published at the respective time of each installation and commissioning.

The responsible staff must ensure that the application or use of the products described satisfy all the requirements for safety, including all the relevant laws, regulations, guidelines and standards.

Disclaimer

The documentation has been prepared with care. The products described are, however, constantly under development.
We reserve the right to revise and change the documentation at any time and without prior announcement.
No claims for the modification of products that have already been supplied may be made on the basis of the data, diagrams and descriptions in this documentation.

Trademarks

Beckhoff®, TwinCAT®, EtherCAT®, Safety over EtherCAT®, TwinSAFE®, XFC® and XTS® are registered trademarks of and licensed by Beckhoff Automation GmbH.
Other designations used in this publication may be trademarks whose use by third parties for their own purposes could violate the rights of the owners.

Patent Pending

The EtherCAT Technology is covered, including but not limited to the following patent applications and patents:
EP1590927, EP1789857, DE102004044764, DE102007017835
with corresponding applications or registrations in various other countries.

The TwinCAT Technology is covered, including but not limited to the following patent applications and patents:
EP0851348, US6167425 with corresponding applications or registrations in various other countries.

EtherCAT® is registered trademark and patented technology, licensed by Beckhoff Automation GmbH, Germany

Copyright

© Beckhoff Automation GmbH & Co. KG, Germany.
The reproduction, distribution and utilization of this document as well as the communication of its contents to others without express authorization are prohibited.
Offenders will be held liable for the payment of damages. All rights reserved in the event of the grant of a patent, utility model or design.

1.1 Explanation of symbols

The following symbols with corresponding warnings or explanatory text are used in the documentation. Read and follow the warnings.

Symbols that warn of personal injury:

DANGER	**Serious risk of injury** Note this warning. Hazard with high risk of death or serious injury.
WARNING	**Risk of injury** Note this warning. Hazard with medium risk of death or serious injury.
CAUTION	**Personal injuries** Note this warning. Hazard with a low degree of risk, which could lead to minor or moderate injury.

Symbols that warn of damage to property or equipment:

Attention	**Damage to the devices or environment** Note this warning. Risk of damage to the environment and equipment.

Symbols indicating further information or tips:

Note	**Tip or pointer** This symbol indicates information that contributes to better understanding.

1.2 Documentation issue status

Version	Comment
0.1	• Preliminary Version (German only)
1.0	• First release
1.1	• Foreword updated • CX8030 added
1.2	• Chapter 1-second UPS added • Chapter *Operating System* added
1.3	• Foreword reworked • Chapter „For your safety“ added • ATEX warnings added
1.4	• Chapter “Transport and storage“ added
1.5	• Chapter “FCC” added
1.6	• Warnings for Ex area revised • Chapter “IECEx” added

Image Version CX8030

Firmware	Description
Build 2240	• Release version (requires TC2.11 Build 2240)

Image Version CX8031

Firmware	Description
Build 2240	• Release version (requires TC2.11 Build 2240)
Build 2233	• First Version

2 For your safety

Read the chapter on safety and follow the instructions in order to protect from personal injury and damage to equipment.

Limitation of liability

All the components are supplied in particular hardware and software configurations appropriate for the application. Unauthorized modifications and changes to the hardware or software configuration, which go beyond the documented options, are prohibited and nullify the liability of Beckhoff Automation GmbH & Co. KG.

In addition, the following actions are excluded from the liability of Beckhoff Automation GmbH & Co. KG:

- Failure to comply with this documentation.
- Improper use.
- Untrained personnel.
- Use of unauthorized replacement parts.

2.1 Intended use

The CX80xx Embedded PC is a control system designed for installation on a DIN rail in a control cabinet or terminal box.

The Embedded PC series is used in conjunction with Bus Terminals for recording digital or analog signals from sensors and transferring them to actuators or higher-level controllers.

The Embedded PC is designed for a working environment that meets the requirements of protection class IP 20. This involves finger protection and protection against solid foreign objects up to 12.5 mm in size, but not protection against water. Operation in wet and dusty environments is not permitted, unless specified otherwise.
The specified limits for electrical and technical data must be adhered to.

Potentially explosive atmospheres

The CX80xx Embedded PC is only suitable for the following potentially explosive atmospheres:

1. For Zone 2 atmospheres in which gas occurs as a combustible material. Zone 2 means that an explosive atmosphere does usually not occur during normal operation, or only for a short time.
2. For Zone 22 atmospheres in which dust occurs as a combustible material. Zone 22 means that an explosive atmosphere in the form of a cloud does usually not occur during normal operation, or only for a short time.

The Embedded PC must be installed in a housing, which ensures protection class IP 54 for gas according to EN 60079-15. A housing with protection class IP 54 is required for non-conductive dust. IP 6X is required for conductive dust according to EN 60079-31.

Improper use

The Embedded PC is not suitable for operation in the following areas:

- The Embedded PC must not be used in other zones except for 2/22 and not without a suitable housing.
- Areas with an aggressive environment, e.g. aggressive gases or chemicals.
- Living areas. In living areas, the relevant standards and guidelines for interference emissions must be adhered to, and the devices must be installed in housings or control cabinets with suitable shielding.

2.2 Staff qualification

All operations involving Beckhoff software and hardware may only be carried out by qualified personnel with knowledge of control and automation engineering. The qualified personnel must have knowledge of the administration of the Embedded PC and the associated network.

All interventions must be carried out with knowledge of control programming, and the qualified personnel must be familiar with the current standards and guidelines for the automation environment.

2.3 Safety instructions

The following safety instructions must be followed during installation and working with networks and the software.

Explosion protection

CAUTION	**Danger of explosion** Gases or dusts can be ignited in potentially explosive areas. Read and follow the safety instructions to prevent deflagration or explosions.

The Embedded PC must be installed in a housing, which ensures protection class IP54 for gas according to EN 60079-15. A housing with protection class IP54 is required for non-conductive dust. IP6X is required for conductive dust according to EN 60079-31.

Observe the temperature at the cable entry points into the housing. If the temperature during nominal operation is higher than 70 °C at the entry points or higher than 80 °C at the wire branching points, cables must be selected that are designed for these high temperatures and operation in potentially explosive atmospheres.

Tighten the screws of the fieldbus plug connectors, in order to prevent the plug connectors slipping out. Only use RJ45 connectors with an intact latch.

Maintain the prescribed ambient temperature during operation. The permissible ambient temperature range during operation is 0 °C to +55 °C.

Take measures to prevent the rated operating voltage exceeding 119 V through short-term interference voltages.

Switch off the power supply and ensure that no explosive atmosphere occurs when:

- Bus Terminals are connected or removed,
- the Embedded PC is wired or cables are connected,
- DIP switches or ID switches are set,
- the front flap is opened,
- the MicroSD card or battery is replaced,
- the USB port behind the front flap is used.

Mounting

- Never work on live equipment. Always switch off the power supply for the device before installation, troubleshooting or maintenance. Protect the device against unintentional switching on.
- Observe the relevant accident prevention regulations for your machine (e.g. the BGV A 3, electrical systems and equipment).
- Ensure standard-compliant connection and avoid risks to personnel. Ensure that data and supply cables are laid in a standard-compliant manner and ensure correct pin assignment.
- Observe the relevant EMC guidelines for your application.
- Avoid polarity reversal of the data and supply cables, as this may cause damage to the equipment.

- The devices contain electronic components, which may be destroyed by electrostatic discharge when touched. Observe the safety precautions against electrostatic discharge according to DIN EN 61340-5-1/-3.

Working with networks

- Limit physical and electronic access to all devices to an authorized group of persons.
- Change the default passwords to reduce the risk of unauthorized access. Regularly change the passwords.
- Install the devices behind a firewall.
- Apply the IT security precautions according to IEC 62443, in order to limit access to and control of devices and networks.

Working with the software

- Use up-to-date security software. The safe function of the Embedded PC can be compromised by malicious software such as viruses or Trojans.
- The sensitivity of an Embedded PC against malicious software increases with the number of installed and active software.
- Uninstall or disable unnecessary software.

Further information about the safe handling of networks and software can be found in the Beckhoff Information System:
http://infosys.beckhoff.com

Document name
Documentation about IPC Security

3 Transport and storage

Transport

Attention	**Short circuit due to moisture** Moisture can form during transport in cold weather or in the event of large temperature fluctuations. Avoid moisture formation (condensation) in the Embedded PC, and leave it to adjust to room temperature slowly. If condensation has occurred, wait at least 12 hours before switching on the Embedded PC.

Despite the robust design of the unit, the components are sensitive to strong vibrations and impacts. During transport the Embedded PC must be protected from

- mechanical stress and
- use the original packaging.

Table 1: Weight and Dimensions.

	CX80xx
Weight	180 g
Dimensions (W x H x D)	64 mm x 100 mm x 73 mm

Storage

- The battery should be removed if the Embedded PC is stored at temperatures above 60 °C. The battery should be stored separate from the Embedded PC in a dry environment at a temperature between 0 °C and 30 °C.
  The preset date and time are lost if the battery is removed.
- Store the Embedded PC in the original packaging.

4 Product overview

4.1 CX80xx - System overview

CX80xx is a device family of programmable controllers with 32-bit ARM-based CPU, which can be used for processing of PLC programs or as slave devices for higher-level fieldbus systems. Unlike with the non-programmable EtherCAT couplers of the EK series, which only act as gateway between the associated fieldbus system and the connected EtherCAT terminals, the CX80xx is programmable and able to run its own control program.

The devices from the CX80xx series represent a further development of the well-known and proven 16-bit microcontroller-based Bus Terminal Controllers from the BC and BX series including more efficient 32-bit processors. As with the BC/BX, it is also ensured in the case of the CX80xx that the control and the local program continue to be executed in the case of interruption of the higher-level fieldbus system. The CX80xx devices can therefore be used as local controllers. Alternatively, Bus Terminals (K-bus) or EtherCAT Terminals (E-bus) can be connected; the CX80xx automatically recognizes which terminal system is connected during the start-up phase. The use of EtherCAT gives rise to further options, such as the realization of different topologies, the integration of further bus systems such as CANopen, PROFIBUS and PROFINET and – with the EtherCAT Box Modules – connection to the IP67 world.

Like all CX products, the CX80xx devices are programmed and commissioned via the Ethernet interface, which can, of course, also be used for connection of the control system with a regular network. Some of the Embedded PCs have further Ethernet interfaces with switch functions, so that a linear "daisy chain" topology can be constructed inexpensively, without additional hardware. The other connections on the lower plug level are fieldbus-specific. Under the cover at the upper housing level there is an exchangeable button cell for date and time, a set of DIP switches for setting function modes, a slot for Micro-SD Flash memory cards and a type B USB connection. Thanks to their low power consumption, the devices are fanless.

Microsoft Windows CE is used as the operating system. In the absence of a monitor port, the operating system and its "virtual" display can only be accessed via the network. As for all other Beckhoff devices, the TwinCAT software is used for system configuration and the programming of the PLC functionality. The CX80xx target device features a pre-installed TwinCAT PLC runtime environment. All software required for operating the device, including the operating system, the TwinCAT files and user files and data, is stored on the MicroSD Flash card. This simplifies exchange in the case of service. Commercial card readers can be used to access the card data. The size of the MicroSD Flash card (e.g. 512 MB) can be chosen depending on the application and the quantity of data to be stored.

The CX80xx device family features an integrated, capacitive 1-second UPS, which in the event of a failure of the supply voltage provides sufficient energy for saving persistent data. Important data are thus preserved in a non-volatile manner without battery backup.

With a high-performance but nevertheless energy-saving 32-bit ARM processor, EtherCAT as I/O bus and TwinCAT PLC with extensive PLC libraries, the Embedded Controllers from the CX80xx series represent high-performance and versatile controllers with slave fieldbus connection.

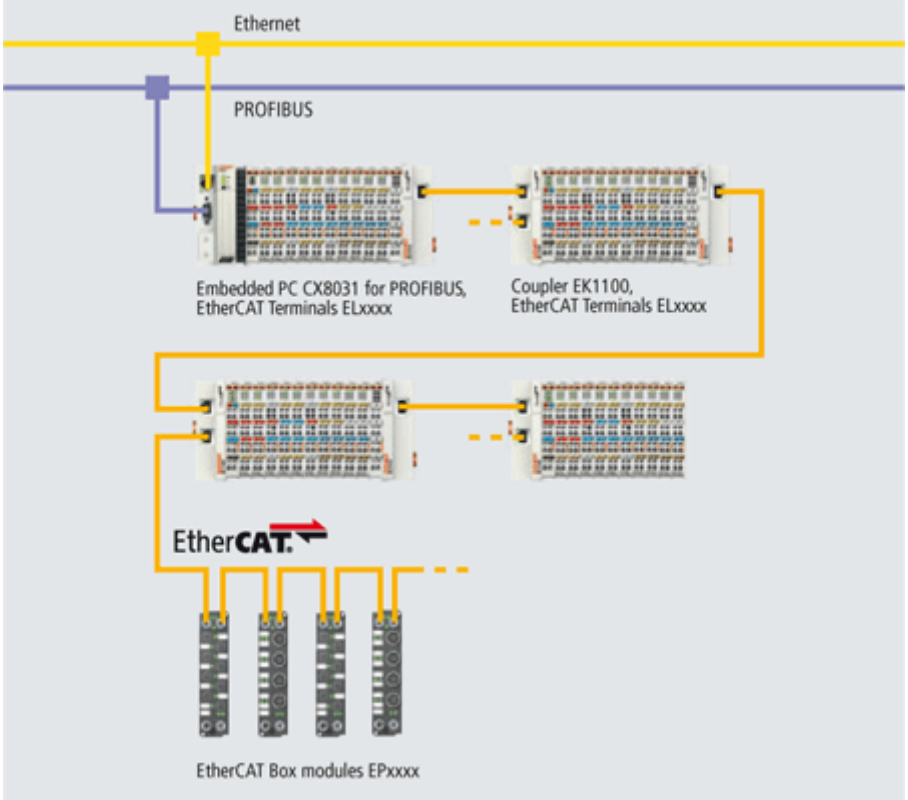

Fieldbus interface

The variants from the CX80xx series differ by their fieldbus interfaces. Various versions cover the most important fieldbus systems:

- CX8010: EtherCATSlave
- CX8030: PROFIBUS DP Master
  CX8031: PROFIBUS DP Slave
- CX8050: CAN Master
  CX8051: CANopen Slave
- CX8080: RS232/485
- CX8090: Ethernet (RT-Ethernet, EAP, ModbusTCP, TCP/IP, UDP/IP, Web Services)
- CX8091: BACnet IP/OPC UA
- CX8093: PROFINET RT Device (Slave)
- CX8095: Ethernet/IP Slave
- CX8097: Sercos III Slave

Programming

The CX80xx controller is programmed according to the high-performance IEC 61131-3 standard. As with all other Beckhoff controllers, the TwinCAT automation software is the basis for parameterization and programming. Users therefore have the familiar TwinCAT tools available, e.g. PLC programming interface, System Manager and TwinCAT Scope.

Configuration

The configuration is also carried out using TwinCAT. The fieldbus interface and the real-time clock can be configured and parameterized via the System Manager. The System Manager can read all connected devices and Bus Terminals. The configuration is stored on the CX after the parameterization. The configuration thus created can be accessed again later.

4.2 CX8030, CX8031 - Introduction

In the basic version the CX80xx contains a 512 MB MicroSD card. A fieldbus interface, an Ethernet interface and a K-bus or E-bus interface are included as standard.

The smallest task time to be used is 1 ms (a task time of 1 to 50 ms is recommended for the I/O data, further tasks can also be set slower). When using shorter cycle times, the total system load is to be observed. If too short a cycle time is selected, the Web visualization and remote desktop may operate very slowly or cause timeouts. The user is responsible for projecting and configuring his system such that it is not overloaded.

CX8030

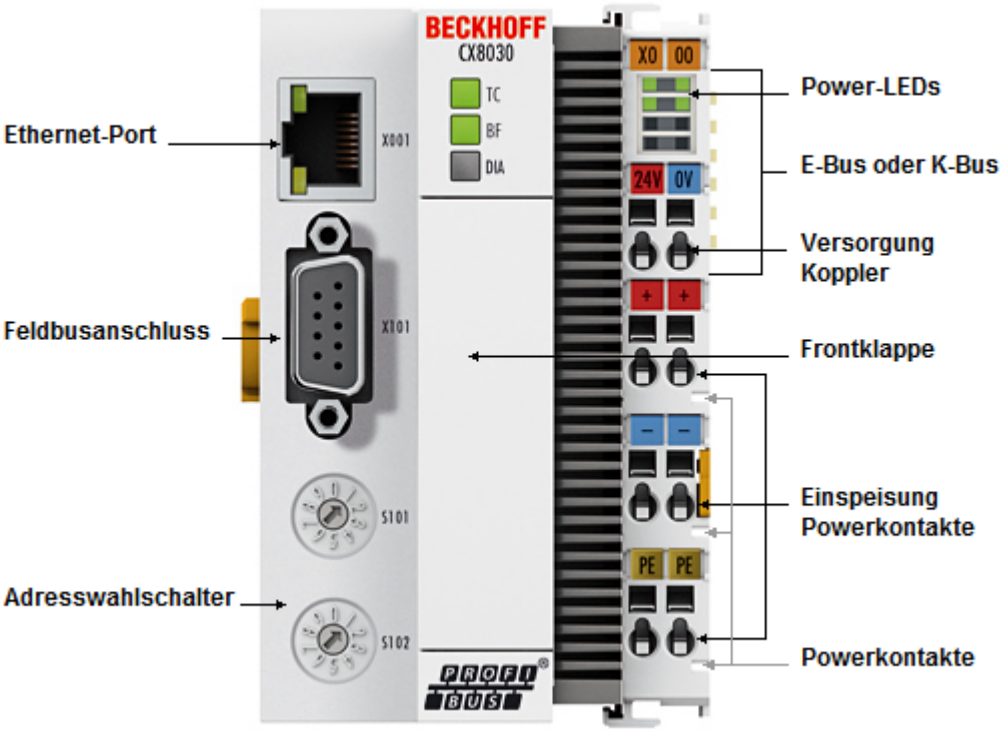

Fig. 1: CX8030_Intro

The CX8030 is a controller with an Ethernet connection, via which it is programmed and/or configured, and a PROFIBUS master interface on an RS485 basis with a D-sub connection. Optionally, the CX8030 can also be operated as a PROFIBUS slave.

Alternatively K-bus or E-bus terminals can be series-connected; the CX8030 automatically detects which type of terminal is connected during the start-up phase. The controller is programmed with TwinCAT via the Ethernet interface.

CX8031

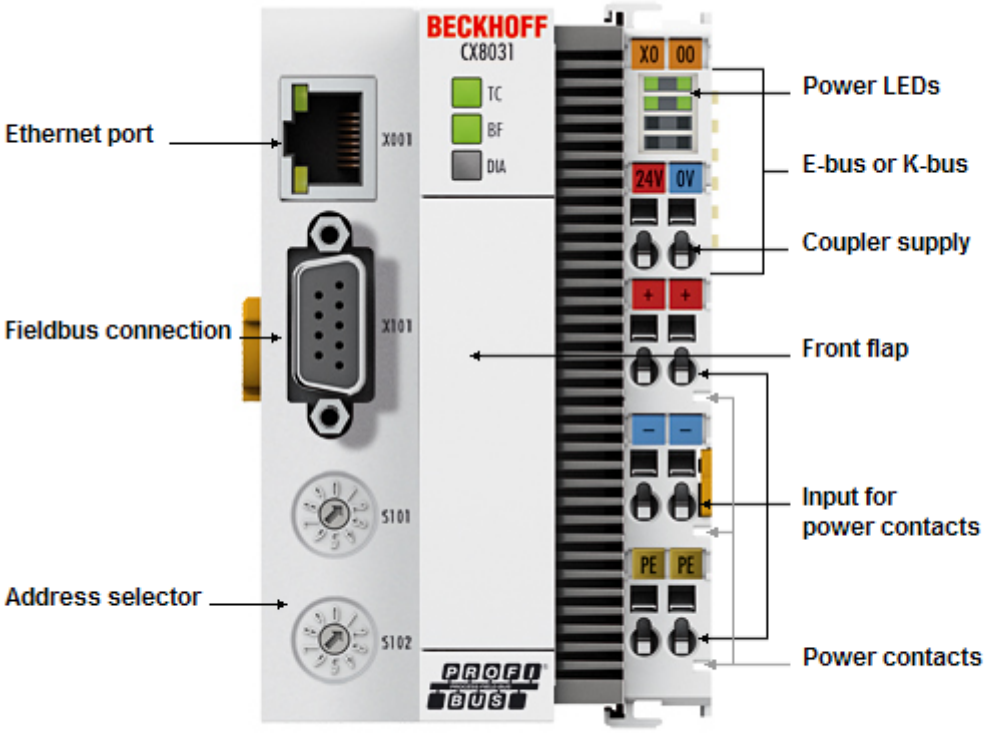

The CX8031 is a controller with an Ethernet connection, via which it is programmed and/or configured, and a PROFIBUS interface on an RS485 basis with a D-sub connection. Physically the CX8031 has only one D-sub interface, but this can be used in such a way that it appears as if 4 devices are on the bus. The advantage of this is that more data can be exchanged and that the CX8031 can communicate as a DP/DP coupler with a second PROFIBUS master.

Alternatively K-bus or E-bus terminals can be series-connected; the CX8031 automatically detects which type of terminal is connected during the start-up phase. The controller is programmed with TwinCAT via the Ethernet interface.

4.3 Technical data

Technical data	CX8030	CX8031
Processor	32 Bit, 400 MHz, ARM9	
Internal main memory	64 MB RAM (internal, not extendable)	
Operating system	Microsoft Windows CE 6.0	
Web-base Management	yes	
Flash memory	MicroSD card (ATP) 512 MB (optionally 1, 2, 4, 8 GB)	
Interfaces	1 x USB device (behind the front flap) 1 x RJ45 Ethernet, 10/100 MBit/s (ADS over TCP/IP) 1 x D-sub RS485 PROFIBUS	
Protocols	PROFIBUS Master (Slave Mode optional)	PROFIBUS slave
Interface for I/O terminals	K-bus or E-bus, automatic recognition	
Process data on the K-bus	max. 2 KB input data max. 2 KB output data	
Diagnostics LED	1 x power, 1 x TC status, 2 x bus status	
Clock	internal battery-backed clock (RTC) for time and date (battery exchangeable)	
Operating system	Microsoft Windows CE	
Control software	TwinCAT PLC runtime (from version 2.11 R3)	
Programming	TwinCAT PLC	
Programming languages	IEC 61131-3	
Online Change	Yes	
Up/download code	Yes/Yes	
Power supply	24 V_{DC}(-15 %/+20 %)	
UPS	1-second UPS	
Power supply for I/O terminals	max. 2 A	
Max. power loss	3.0 W (including system interfaces)	
Dielectric strength	500 V (supply / internal electronics)	
Dimensions (W x H x D)	64 mm x 100 mm x 73 mm	
Weight	approx. 180 g	
Permissible ambient temperature during operation	0° C ... +55° C	
Permissible ambient temperature during storage	-25° C ... +85°C see notes under: Transport and storage [▶ 11]	
Installation position	See chapter Installation positions [▶ 20]	
Relative humidity	95 %, no condensation	
Vibration / shock resistance	conforms to EN 60068-2-6/EN 60068-2-27	
EMC immunity/emission	conforms to EN 61000-6-2/EN 61000-6-4	
Protection class	IP20	

4.4 Technical data - PROFIBUS

System data	PROFIBUS (CX8030, CX8031)				
Number of I/O modules	100 with repeater				
Number of I/O points	approx. 6.000, depending on the master				
Transmission medium	screened copper cable, 2 x 0.25 mm²				
Cable length	1200 m	1000 m	400 m	200 m	100 m
Data transfer rate	9,6/19,2/93,75 kBaud	187,5 kBaud	500 kBaud	1500 kBaud	3, 6, 12 MBaud
Topology	Line topology				

CX8030

Technical data - PROFIBUS	CX8030
Fieldbus	PROFIBUS DP, DP-V1
Data transfer rate	9,6k; 19,2k; 93,75k; 187,5k; 500k; 1,5M; 3M; 6M; 12 MBaud
Bus interface	1 x D-sub socket, 9-pin
Bus devices	max. 125 with repeater
max. process image	30,5 kByte in / 30,5 kByte out
Protokoll	
PROFIBUS-DP	Yes
PROFIBUS-FMS	No
ADS Interface	Yes (only via Ethernet)
Services	
PROFIBUS	DP
DPV1 class 1	Yes
DPV1 class 2	No
DPV2 MC	No
Redundancy	No
Muti Master	No
FDL	No
S5 AG-AG	No
Activating slaves via ADS	Yes
PKW	No
Diagnosis/Status/Alarm	
TC LED	Yes, green/red
BF LED	Yes, green/red
DIA LED	Yes, green/red (no function)

CX8030 as slave

The CX8030 can also be configured as a slave. Unlike the CX8031, where 3 virtual slaves are available, only one real slave can be used. The CX8030 can operate either as a master or as a slave, but not both at the same time.

Technical data - PROFIBUS	CX8030
Data transfer rate	9,6k; 19,2k; 93,75k; 187,5k; 500k; 1,5M; 3M; 6M; 12 MBaud
Bus interface	1 x D-sub socket, 9-pin
Number of slaves	1
max. process image	240 Byte In / 240 Byte Out

CX8031

Technical data - PROFIBUS	CX8031
Fieldbus	PROFIBUS DP, DP-V1
Data transfer rate	9,6k; 19,2k; 93,75k; 187,5k; 500k; 1,5M; 3M; 6M; 12 MBaud
Bus interface	1 x D-sub socket, 9-pin
Extendable process image	Up to 3 virtual slaves in addition
max. process image	4 slaves x (240 bytes in / 240 bytes out)
Autobaud	Yes
Protokoll	
PROFIBUS-DP Slave	Yes
PROFIBUS-DP (virtual slave)	4 (3 virtual PROFIBUS Nodes)
ADS Interface	Yes (only via Ethernet)
Services	
PROFIBUS	DP
DPV1	Yes
Diagnosis/Status/Alarm	
TC LED	Yes, green/red
BF LED	Yes, green/red
DIA LED	Yes, green/red
diagnostic notice	Yes

4.5 CX80xx - MicroSD cards

CAUTION	**MicroSD card as ignition source in potentially explosive atmospheres** Gases or dusts can be ignited by a spark discharge when the MicroSD card is inserted or removed. Switch off the power supply and wait until the 1-second UPS has discharged. Ensure that there is no explosive atmosphere before you insert or remove the MicroSD card.

In the basic version the CX80xx contains a MicroSD card with 512 MB. You can order it as an option with larger cards (up to 8 GB).

The cards employed are SLC memory with extended temperature range for industrial applications. Use exclusively MicroSD cards approved by Beckhoff.

Example of a MicroSD card:

Order identifier	Capacity	Description
CX1900-0123	1 GB	MicroSD card (SLC memory) with extended temperature range for industrial applications instead of the 512 MB card (ordering option)
CX1900-0125	2 GB	
CX1900-0127	4 GB	
CX1900-0129	8 GB	

Order identifier	Capacity	Description
CX1900-0122	512 MB	MicroSD card (SLC memory) with extended temperature range for industrial applications as spare part.
CX1900-0124	1 GB	
CX1900-0126	2 GB	
CX1900-0128	4 GB	
CX1900-0130	8 GB	

Further Information: http://www.beckhoff.de/CX8000

5 Mounting and wiring

5.1 Mounting

CAUTION	**Application in potentially explosive atmospheres** The Embedded PC must be fitted with a suitable housing and suitable cables for use in potentially explosive atmospheres. In potentially explosive atmospheres, the Embedded PC must always be installed in a housing with the correct protection class, and suitable cables must be used.

Install the Embedded PC in a housing or a control cabinet, if it is to be used in potentially explosive atmospheres.

Table 2: Embedded PC installation, requirements for housing in potentially explosive atmospheres.

Ex area	Flammable substance	Protection class
Zone 2	Gas	IP 54, according to EN 60079-15
Zone 22	dust, non-conductive	IP 54, according to EN 60079-31
	dust, conductive	IP 6x, according to EN 60079-31

Observe the temperature at the cable entry points into the housing. If the temperature during nominal operation is higher than 70 °C at the entry points or higher than 80 °C at the wire branching points, cables that are designed for these higher temperatures and Ex operation must be used.

5.1.1 Dimensions

The following drawings show the dimensions of the CX80xx Embedded PCs.

Dimensions

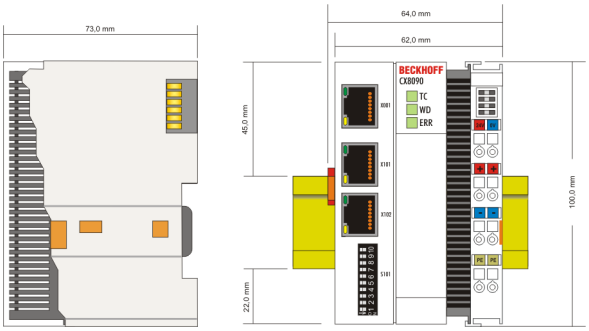

Drawings in various CAD formats can be found at: http://www.beckhoff.de/german/download/cx1000.htm

5.1.2 Installation on mounting rails

Snapping onto the mounting rail

The CX80xx can simply be snapped onto the mounting rail. To this end simply position the block on the mounting rail and push it slightly until it engages on the right-hand side. The is indicated by a distinct click. Use a screwdriver to push up the lock on the left-hand side, thereby turning it and causing it to engage audibly.

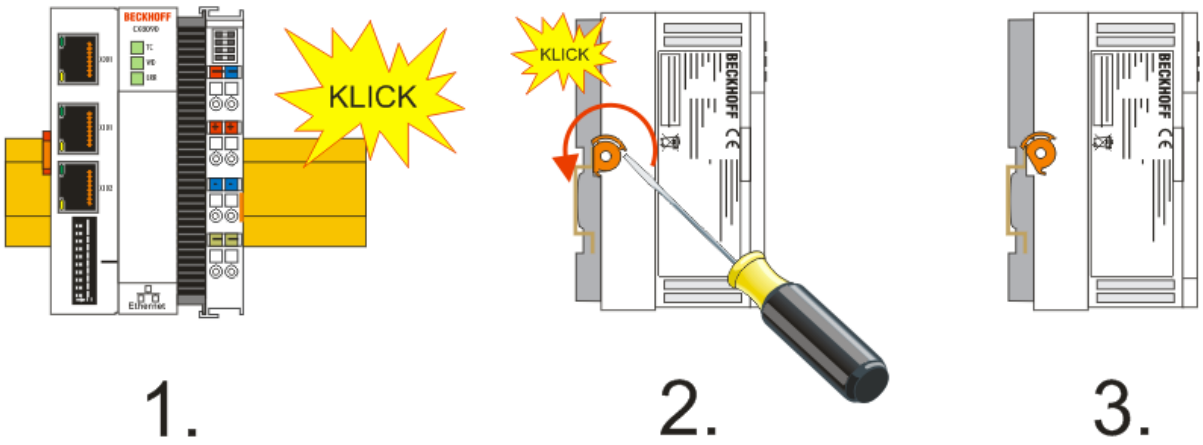

Attention	**Avoid damage!** Do not force the module or apply excessive pressure!

Permissible installation positions and minimum distances

Installation positions

Installation position up to 55 °C

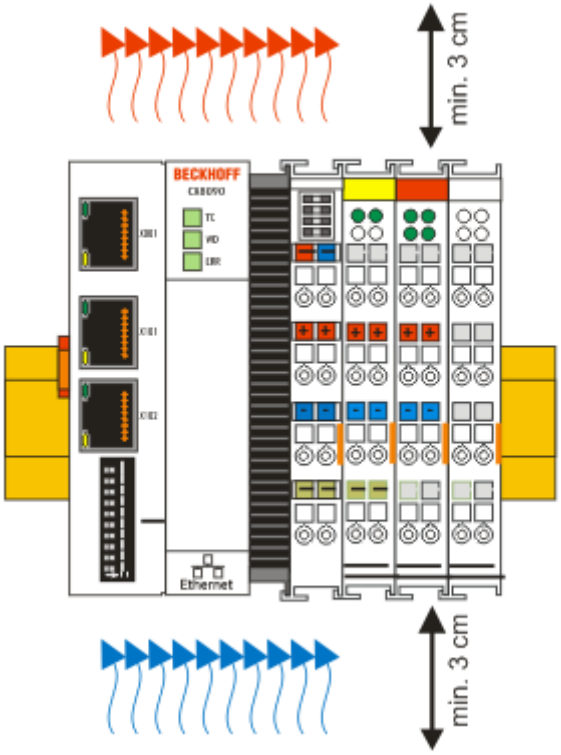

Attention	**Comply with the permitted installation position and minimum distances!** The maximum ambient temperature for CPU modules mounted on a DIN rail is 55°C. The orientation in which the device is fitted must be selected in such a way that cooling air can flow vertically through the ventilation holes. The images show the permitted and restricted installation positions. Mounting must provide a clearance of 30 mm both above and below a CX80xx device combination to ensure adequate ventilation of the base CPU module and the power supply unit.

The high performance and the compact design of the CX80xx systems may result in increased heat generation. The heat is dissipated via a passive ventilation system. This system requires the unit to be mounted correctly. Ventilation openings are located at the top and bottom of the housing. The system therefore has to be installed horizontally. This ensures optimum air flow.

Installation positions with reduced temperature range up to 45 °C

Other installation positions are permitted with a temperature range up to 45 °C.

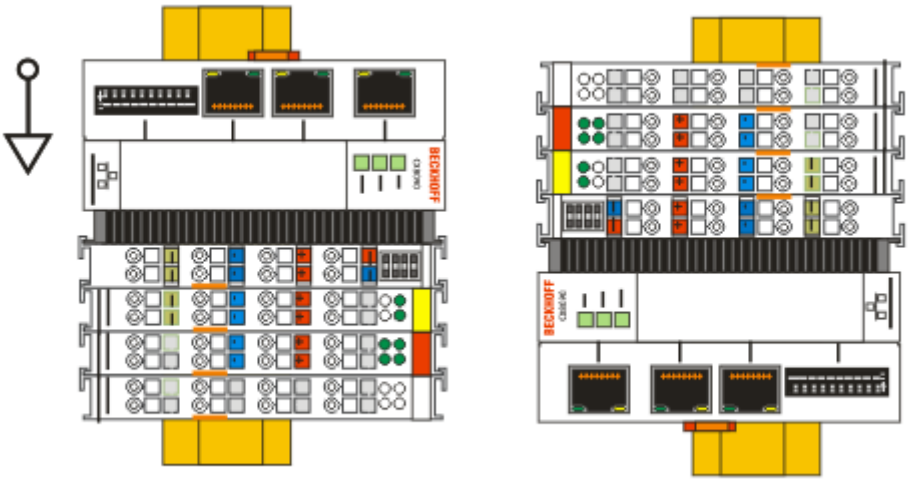

5.2 Wiring

5.2.1 Power supply

WARNING	**Risk of injury through electric shock and damage to the device!** Bring the CX80xx into a safe, de-energized state before starting assembly, disassembly or wiring!

CAUTION	**Connections as ignition source in potentially explosive atmospheres** Gases or dusts can be ignited by a spark discharge when the Embedded PC is wired. Switch off the power supply and wait until the 1-second UPS has discharged. Ensure that there is no explosive atmosphere before you wire the Embedded PC and connect or disconnect Bus Terminals.

This power supply unit is equipped with an I/O interface, which permits connection of the Beckhoff Bus Terminals. The power is supplied via the upper spring-loaded terminals with the designation 24 V and 0 V.

The supply voltage supplies the CX system and, via the terminal bus, the Bus Terminals with a voltage of 24 V_{DC} (15 %/+20 %). The dielectric strength of the power supply is 500 V. Since the Terminal Bus (K- and E-bus) only transfers data, a separate power supply is required for the Bus Terminals. This is provided by means of the power contacts, which are not connected to the power supply. Only 24 V DC may be connected to the power contacts; the maximum current load of the power contacts is 10 A.

CAUTION	**Power contact PE** The PE power contact must not be used for other potentials.

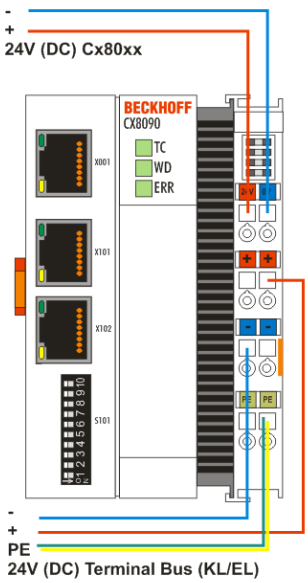

Requirements for the power supply (24 V)

In order to guarantee the operation of the CPU (CX80xx module) and the terminal strand in all cases, the power supply must supply 2.0 A at 24 V.

LED

If the power supply unit is connected correctly and the power supply is switched on, the two upper LEDs in the terminal prism are green. The left LED (Us) indicates the CPU supply. The right LED (Up) indicates the terminal supply. The other LEDs indicate the Terminal Bus status. A detailed description of the LEDs can be found in section "LED troubleshooting".

5.2.2 Ethernet

Ethernet connections

Assignment of the RJ45 interface, port 1

X001

PIN	Signal	Description
1	TD +	Transmit +
2	TD -	Transmit -
3	RD +	Receive +
4	connected	reserved
5		
6	RD -	Receive -
7	connected	reserved
8		

Assignment of the RJ45 interface, port 2 (switched)

CX8010, CX809x: X101/102
EK9xxx: X001 / X002

PIN	Signal	Description
1	TD +	Transmit +
2	TD -	Transmit -
3	RD +	Receive +
4	connected	reserved
5		
6	RD -	Receive -
7	connected	reserved
8		

Transmission standards

10Base5

The transmission medium for 10Base5 consists of a thick coaxial cable ("yellow cable") with a max. transmission speed of 10 Mbaud arranged in a line topology with branches (drops) each of which is connected to one network device. Because all the devices are in this case connected to a common transmission medium, it is inevitable that collisions occur often in 10Base5.

10Base2

10Base2 (Cheaper net) is a further development of 10Base5, and has the advantage that the coaxial cable is cheaper and, being more flexible, is easier to lay. It is possible for several devices to be connected to one 10Base2 cable. It is frequent for branches from a 10Base5 backbone to be implemented in 10Base2.

10BaseT

Describes a twisted pair cable for 10 Mbaud. The network here is constructed as a star. It is no longer the case that every device is attached to the same medium. This means that a broken cable no longer results in failure of the entire network. The use of switches as star couplers enables collisions to be reduced. Using full-duplex connections they can even be entirely avoided.

100BaseT

Twisted pair cable for 100 MBaud. It is necessary to use a higher cable quality and to employ appropriate hubs or switches in order to achieve the higher data rate.

10BaseF

The 10BaseF standard describes several optical fiber versions.

Short description of the 10BaseT and 100BaseT cable types

Twisted pair copper cable for star topologies, where the distance between two devices may not exceed 100 meters.

UTP

Unshielded twisted pair
This type of cable belongs to category 3, and is not recommended for use in an industrial environment.

S/UTP

Screened/unshielded twisted pair (screened with copper braid)
Has a general screen of copper braid to reduce influence of external interference. This cable is recommended for use with Bus Couplers.

FTP

Foiled shielded twisted pair (screened with aluminum foil)
This cable has an outer screen of laminated aluminum and plastic foil.

S/FTP

Screened/foiled-shielded twisted pair (screened with copper braid and aluminum foil)
Has a laminated aluminum screen with a copper braid on top. Such cables can provide up to 70 dB reduction in interference power.

STP

Shielded twisted pair
Describes a cable with an outer screen, without defining the nature of the screen any more closely.

S/STP

Screened/shielded twisted pair (wires are individually screened)
This identification refers to a cable with a screen for each of the two wires as well as an outer shield.

ITP

Industrial Twisted-Pair
The structure is similar to that of S/STP, but, in contrast to S/STP, it has only one pair of conductors.

5.2.3 PROFIBUS

5.2.3.1 PROFIBUS Cabling

Physical aspects of the data transmission are defined in the PROFIBUS standard (see PROFIBUS layer 1: Physical Layer).

The types of area where a fieldbus system can be used is largely determined by the choice of the transmission medium and the physical bus interface. In addition to the requirements for transmission security, the expense and work involved in acquiring and installing the bus cable is of crucial significance. The PROFIBUS standard therefore allows for a variety of implementations of the transmission technology while retaining a uniform bus protocol.

Cable-based transmission

This version, which accords with the American EIA RS-485 standard, was specified as a basic version for applications in production engineering, building management and drive technology. A twisted copper cable with one pair of conductors is used. Depending on the intended application area (EMC aspects should be considered) the screening may be omitted.

Two types of conductor are available, with differing maximum conductor lengths (see the RS-485 table).

Table 3: RS485 - Fundamental properties

RS-485 transmission according to the Profibus standard	
Network topology	Linear bus, active bus terminator at both ends, stubs are possible.
Medium	Screened twisted cable, screening may be omitted, depending upon the environmental conditions (EMC).
Number of stations	32 stations in each segment with no repeater. Can be extended to 127 stations with repeater
Max. bus length without repeater	100 m at 12 MBit/s 200 m at 1500 KBit/s, up to 1.2 km at 93.75 KBit/s
Max. bus length with repeater	Line amplifiers, or repeaters, can increase the bus length up to 10 km. The number of repeaters possible is at least 3, and, depending on the manufacturer, may be up to 10.
Transmission speed (adjustable in steps)	9.6 kBit/s; 19.2 kBit/s; 93.75 kBit/s; 187.5 kBit/s; 500 kBit/s; 1500 kBit/s; 12 MBit/s
Plug connector	9-pin D-Sub connector for IP20 M12 round connector for IP65/67

Cabling for PROFIBUS DP and PROFIBUS FMS

Note the special requirements on the data cable for baud rates greater than 1.5 MBaud. The correct cable is a basic requirement for correct operation of the bus system. If a simple 1.5 Mbaud cable is used, reflections and excessive attenuation can lead to some surprising phenomena. It is possible, for instance, for a connected PROFIBUS station not to achieve a connection, but for it to be included again when the neighboring station is disconnected. Or there may be transmission errors when a specific bit pattern is transmitted. The result of this can be that when the equipment is not operating, PROFIBUS works without faults, but that there are apparently random bus errors after start-up. Reducing the baud rate (< 93,75 kBaud) corrects this faulty behavior.

If reducing the baud rate does not correct the error, then in many cases this can indicate a wiring fault. The two data lines maybe crossed over at one or more connectors, or the termination resistors may not be active, or they may be active at the wrong locations.

Note	**Pre-assembled cables from Beckhoff** Installation is made a great deal more straightforward if pre-assembled cables from Beckhoff are used! Wiring errors are avoided, and commissioning is more rapidly completed. The Beckhoff range includes fieldbus cables, power supply cables, sensor cables and accessories such as terminating resistors and T-pieces. Connectors and cables for field assembly are nevertheless also available.

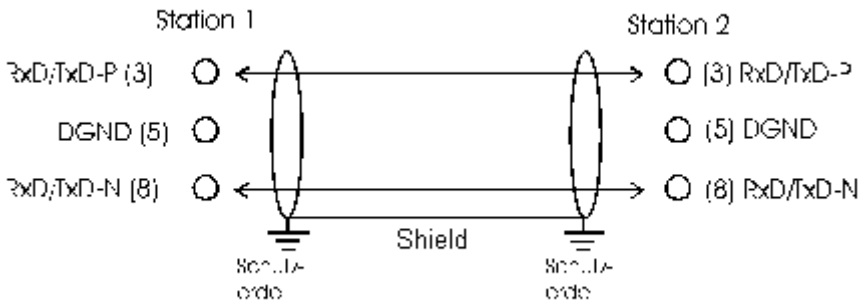

Note	**Termination resistors** In systems with more than two stations all devices are wired in parallel. It is essential that the bus cables are terminated with resistors at the conductor ends in order to avoid reflections and associated transmission problems.

Distances

The bus cable is specified in EN 50170. This yields the following lengths for a bus segment.

Baud rate in kbits/sec	9.6	19.2	93.75	187.5	500	1500	12000
Cable length in m	1200	1200	1200	1000	400	200	100

Stubs up to 1500 kbaud <6.6 m; at 12 Mbaud stub segments should not be used.

Bus segments

A bus segment consists of at most 32 devices. 126 devices are permitted in a PROFIBUS network. Repeaters are required to refresh the signal in order to achieve this number. Each repeater is counted as one device.

IP-Link is the subsidiary bus system for Fieldbus Boxes, whose topology is a ring structure. There is an IP master in the coupler modules (IP230x-Bxxx or IP230x-Cxxx) to which up to 120 extension modules (IExxxx) may be connected. The distance between two modules may not exceed 5 m. When planning and installing the modules, remember that because of the ring structure the IP-Link master must be connected again to the last module.

Installation guidelines

When assembling the modules and laying the cables, observe the technical guidelines provided by the PROFIBUS User Organization (PROFIBUS Nutzerorganisation e.V.) for PROFIBUS DP/FMS (seewww.profibus.com).

Checking the PROFIBUS wiring

A PROFIBUS cable (or a cable segment when using repeaters) can be checked with a few simple resistance measurements. The cable should meanwhile be removed from all stations:

1. Resistance between A and B at the start of the lead: approx. 110 Ohm
2. Resistance between A and B at the end of the lead: approx. 110 Ohm
3. Resistance between A at the start and A at the end of the lead: approx. 0 Ohm
4. Resistance between B at the start and B at the end of the lead: approx. 0 Ohm
5. Resistance between screen at the start and screen at the end of the lead: approx. 0 Ohm

If these measurements are successful, the cable is okay. If, in spite of this, bus malfunctions still occur, this is usually a result of EMC interference. Observe the installation notes from the PROFIBUS User Organization (www.profibus.com).

5.2.3.2 PROFIBUS Connection

M12 circular connector

The M12 socket is inverse coded, and has five pins. Pin 1 is 5 V_{DC} and 3 is GND for the active termination resistor. These must never be misused for other functions, as this can lead to destruction of the device.

Pin 2 and pin 4 are the PROFIBUS signals. These must never be swapped over, as this will prevent communication. Pin 5 is the shield, and this is capacitatively coupled to the Fieldbus Box chassis.

M12 socket pin assignment (-B310)

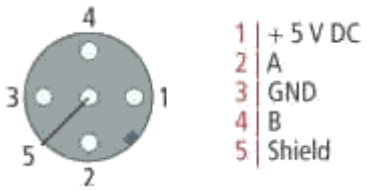

M12 socket/plug pin assignment (-B318)

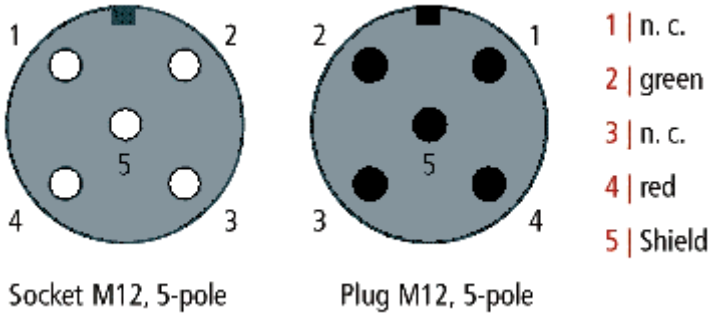

Nine pole D-Sub

Pin 6 is 5 V_{DC} und Pin 5 is GND for the active termination resistor. These must never be misused for other functions, as this can lead to destruction of the device.

Pin 3 and pin 8 are the PROFIBUS signals. These must never be swapped over, as this will prevent communication.

D-Sub socket pin assignment

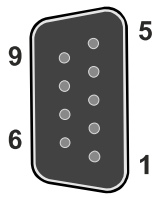

6	+ 5V DC
8	A
5	GND
3	B
	Shield

PROFIBUS conductor colors

PROFIBUS conductors	M12	D-Sub
B red	Pin 4	Pin 3
A green	Pin 2	Pin 8

Connection of Fieldbus Box modules

The connection of the Fieldbus Box modules is done direct or via a T-piece (or Y-piece).

The B318 series does have a male and female connector, that means no external T-piece is required. The supply voltage (+5V_{DC}) for the termination resistor is only supplied via the female M12 connector. The termination resistor ZS1000-1610 is only available with male connector.

Therefore the incoming PROFIBUS line should end in a female connector.

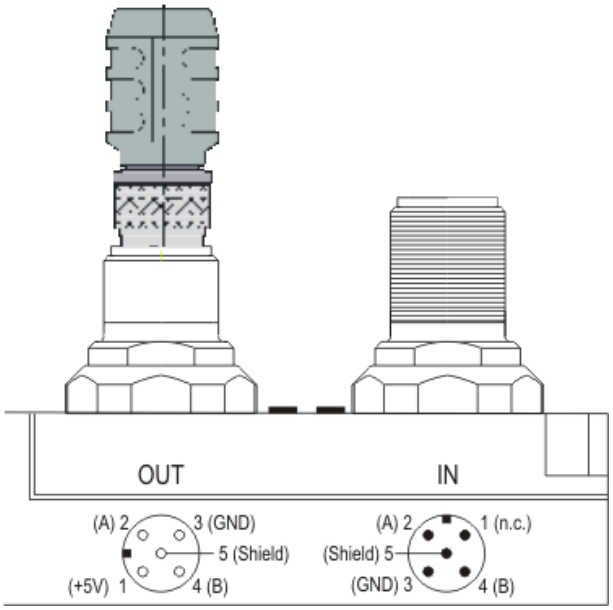

Two T-pieces are available:

- ZS1031-2600 with +5VDC on male and female connector for the termination resistor
- ZS1031-2610 with +5VDC only on the female connector

5.3 Changing the battery

CAUTION	**Battery as ignition source in potentially explosive atmospheres** Gases or dusts can be ignited by a spark discharge when the battery is inserted or removed. Switch off the power supply and wait until the 1-second UPS has discharged. Ensure that there is no explosive atmosphere before you insert or remove the battery.

Attention	**An incorrectly inserted battery may explode!** Use exclusively the specified battery type. Make absolutely sure that positive and negative terminals of the battery are inserted correctly. (Plus pole on the left). Never open the battery or throw it into a fire. The battery cannot be recharged.

The battery of the CX80xx is required for the real-time clock (RTC) of the CX80xx. It ensures that the RTC continues to run in the power-off state so that the set time is available again on restarting.

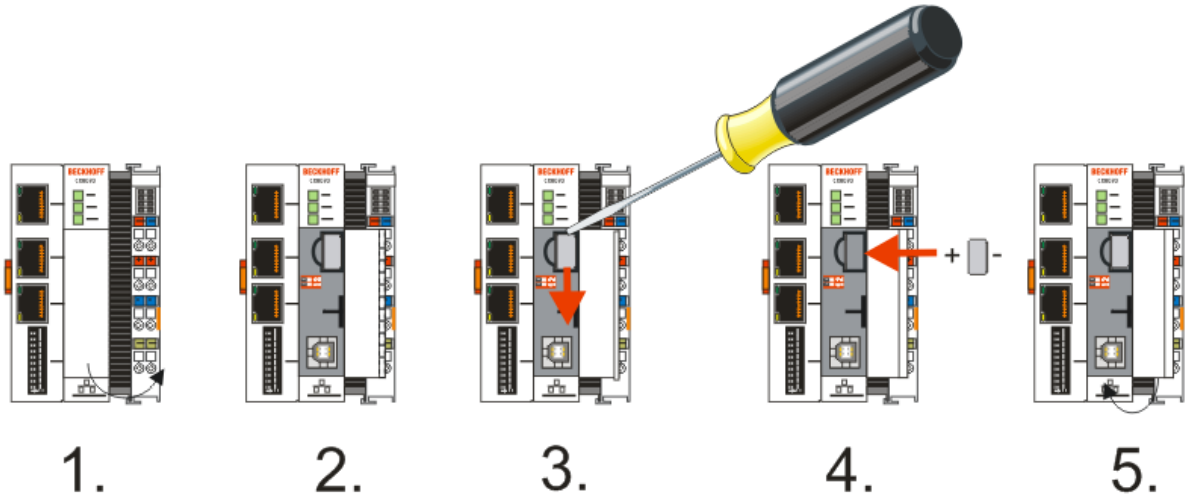

- Step 1: Open the flap
- Step 2/3: Take a small flat-blade screwdriver, insert it above the battery and prise the battery carefully out of the device
- Step 4: Insert the new battery. The plus pole must be on the left
- Step 5: Close the flap again

Battery type	Technical data
Duracell 303/357 SR44	1.5 V / 165 mAh

Note	**Battery maintenance** The battery must be replaced every 5 years. Spare batteries can be ordered from Beckhoff Service.

6 Parameterization and commissioning

6.1 DIP switch

CAUTION	**DIP switches as ignition source in potentially explosive atmospheres** Gases or dusts can be ignited by a spark discharge when DIP switches are used. Switch off the power supply and wait until the 1-second UPS has discharged. Ensure that there is no explosive atmosphere before you use DIP switches.

2x 10-pole address switch S101/S102

Address selector can be employed for the use of the PROFIBUS address.

S101 for the address x 1, S102 for the address x10, example S101=2, S102=3 PB address 32

So that the address is also used via the address selector, this must be activated in the System Manager.

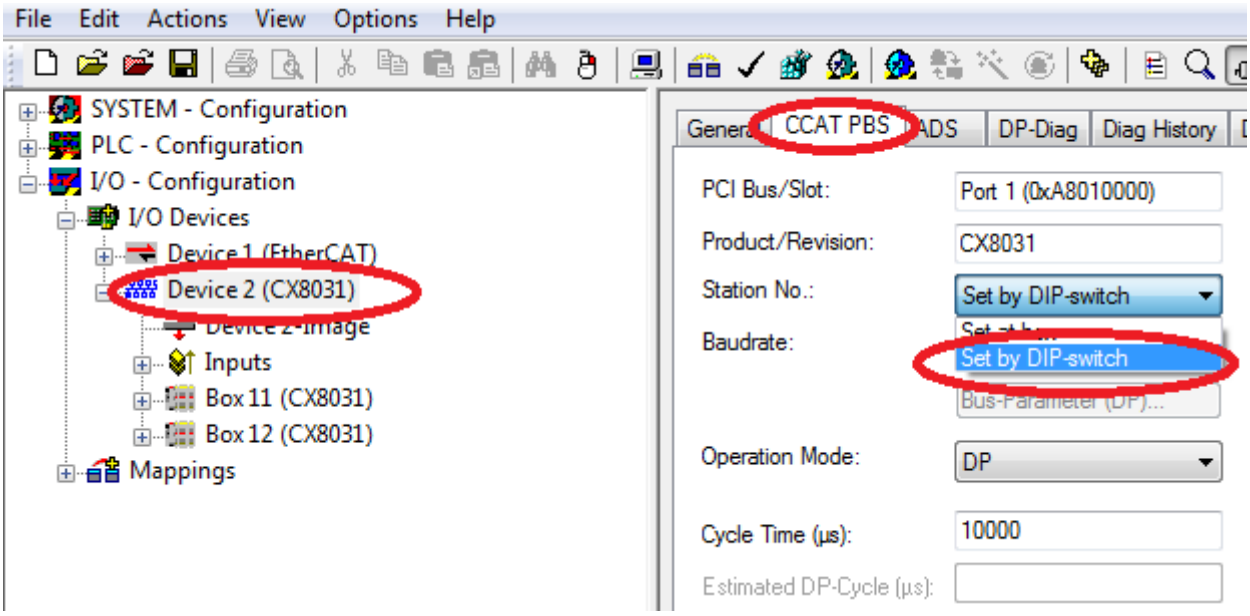

The station address can now be set for each slave with a DIP switch + number. For the virtual slaves you can use +1, +2, +3 for example.

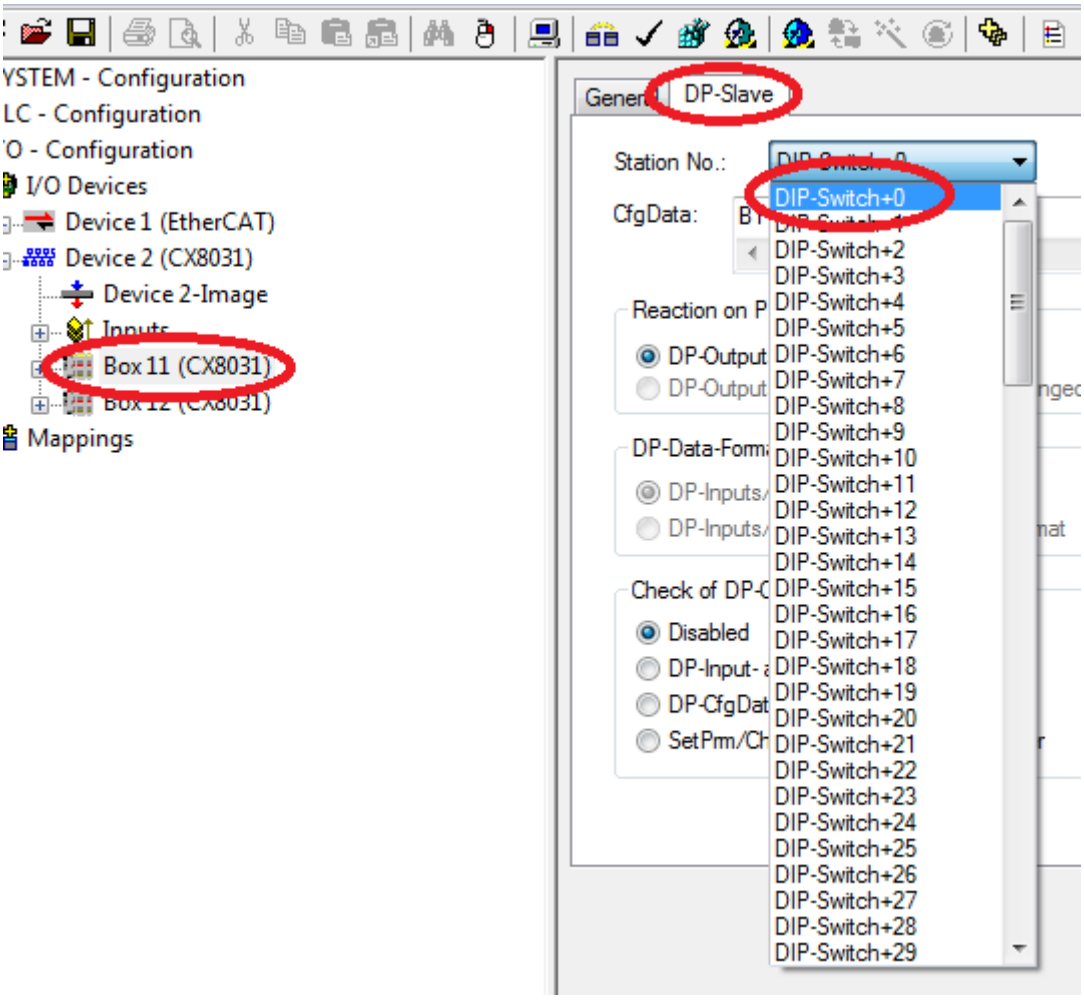

2-pole DIP switch (under the flap between the battery and the SD card slot)

Requirements

DIP switch (red)	Meaning
1 off and 2 off	normal mode, TwinCAT is started
1 on and 2 off	The CX mode starts in Config Mode; the flash memory or, in the case of the CX80xx the SD card, is reachable via the USB interface (for example for an image update).
1 off and 2 on	Restore the registry
1 on and 2 on	No function so far

6.2 Setting the IP adress

6.2.1 IP address

The CX8010, CX803x, CX805x and CX8080 have an Ethernet interface, X001.

X001

IP addressing via the operating system; default is DHCP (represented in the operating system as FEC1)

EtherCAT interface

The EtherCAT interface is a further Ethernet interface that is not visible in the operating system for the IP addressing.

6.2.2 Setting the address via DHCP server

Port 1 (X001) is set to DHCP by default.

If DHCP is switched on, the CX is automatically assigned an IP address by the DHCP server. The DHCP server must know the MAC ID of the Bus Terminal Controller for this. The IP address should be assigned statically by the DHCP server. A local IP address is used if no DHCP server is reachable.

The DNS name is formed from the type and the last 3 byte of the MAC ID. The MAC ID is given on the production label of the Bus Terminal Controller.

Example: CX80xx

- MAC ID: 00-01-05-01-02-03
- DNS name: CX-010203

6.2.3 Subnet mask

The subnet mask is subject to the control of the network administrator, and specifies the structure of the subnet.

Small networks without a router do not require a subnet mask. The same is true if you do not use registered IP numbers. A subnet mask can be used to subdivide the network with the aid of the mask instead of using a large number of network numbers.

The subnet mask is a 32-bit number:

- Ones in the mask indicate the subnet part of an address space.
- Zeros indicate that part of the address space which is available for the host IDs.

Description	Binary representation	Decimal representation
IP address	10101100.00010000.00010001.11001000	172.16.17.200
Subnet mask	11111111.11111111.00010100.00000000	255.255.20.0
Network ID	10101100.00010000.00010000.00000000	172.16.16.0
Host ID	00000000.00000000.00000001.11001000	0.0.1.200

Standard subnet mask

Address class	Standard subnet mask (decimal)	Standard subnet mask (hex)
A	255.0.0.0	FF.00.00.00
B	255.255.0.0	FF.FF.00.00
C	255.255.255.0	FF.FF.FF.00

Note	**Assignment of subnets, host numbers and IP addresses** Neither subnet 0 nor the subnet consisting only of ones may be used. Host number 0, and the host number consisting only of ones, must not be used. Under BootP or DHCP the subnet mask is transmitted also by the server.

6.3 Configuration

6.3.1 CX80xx - Operating system

The CX80xx comes with a Microsoft CE operating system, version 6.0. This operating system is adapted and optimized for the CX80xx. Not all CE6.0 components are available.

Safety

From image version 3.54b security was tightened. This applies to CERHOST and TELNET. Both services are now switched off in delivery state. To reactivate these services, you need a Micro SD card reader.

CERHOST

CERHOST is deactivated by current images on first start-up via the registry file *CeRemoteDisplay_Disable.reg*, which is located in the folder *RegFiles*.

To reactivate CERHOST, delete the file *CeRemoteDisplay_Disable.reg* from the folder *RegFiles* and also the folder *Documents and Settings*.
Then reinsert the Micro SD card in the CX and reboot. The CX creates a new *Document and Settings* directory and then reboots automatically.
The CX is then accessible again via CERHOST.

TELNET

TELNET is deactivated by current images on first start-up via the registry file *Telnet_Disable.reg*, which is located in the folder *RegFiles*.

To reactivate TELNET, delete the file *Telnet_Disable.reg* from the folder *RegFiles* and also the folder *Documents and Settings*.
Then reinsert the Micro SD card in the CX and reboot. The CX creates a new *Document and Settings* directory and then reboots automatically.
The CX is then accessible again via TELNET.

IMAGE

If you do not know what image is loaded on the CX80xx, you can determine it quite easily.

- Via the web diagnostics page of the CX. Here you can find the build number under the *TwinCAT* device.
  Opening the web diagnostics page:
  - IP address</config
  or
  - CX name/config
  Example:
  - *172.16.17.201/config*
  or
  - *CX-01551E/config*

- Via a Micro SD card reader.
  The Micro SD card contains a file with the name of the image.
  Example CX8000_CE600_LF_v354b_TC211R3_B2248.
  TC211R3_2248 indicates the TwinCAT build; in the example the build is 2248.

Prerequisites

Feature / platform	CX80x0 LF version 3.xx
ATL	Xtd
MFC	X
XML DOM	X
COM	X
COM Storage	-
Winsock	X
TCP/IP	X
TCP/IPv6	-
Firewall	X
Network Utilities (IpConfig, Ping, Route)	X
UPnP	
Control Point	-
Device Host	X
SOAP	
Client	-
Server	-
DCOM	**-**
Object Exchange Protocol OBEX	-
Message Queuing MSMQ	-
Server	
File Server (SMB/CIFS)	X
File Server	X
Print-Server (SMB/CIFS)	-
RAS Server / PPTP Server	-
Simple Network Management Protocol (SNMP)	X
Telnet Server	X
HTTP / ASP / FTP / SNTP -Server	X
Web Server (HTTPD) / Active Server Pages (ASP) Support / JScript 5.6 / VBScript 5.6	X
Simple Network Time Protocol (SNTP)	X
HTML / DHTML, TLS, ISAPI extensions	X
Internet Explorer 6.0	-
Java Applets	-
NET Compact Framework	v3.5
RDP Client (Remote Desktop protocol)	-
CAB File Installer/Uninstaller	X
TwinCAT (Level PLC)	X
USB support	X
Printer, storage on Compact Flash, for example	-
HID (Human interface devices)	-
Touch	-

6.3.2 Power supply terminal

K-bus interface

It is possible to operate K-bus terminals on the CX80xx.

The CX80xx recognizes these terminals automatically on scanning, reads out the terminal types and automatically places them in the System Manager.

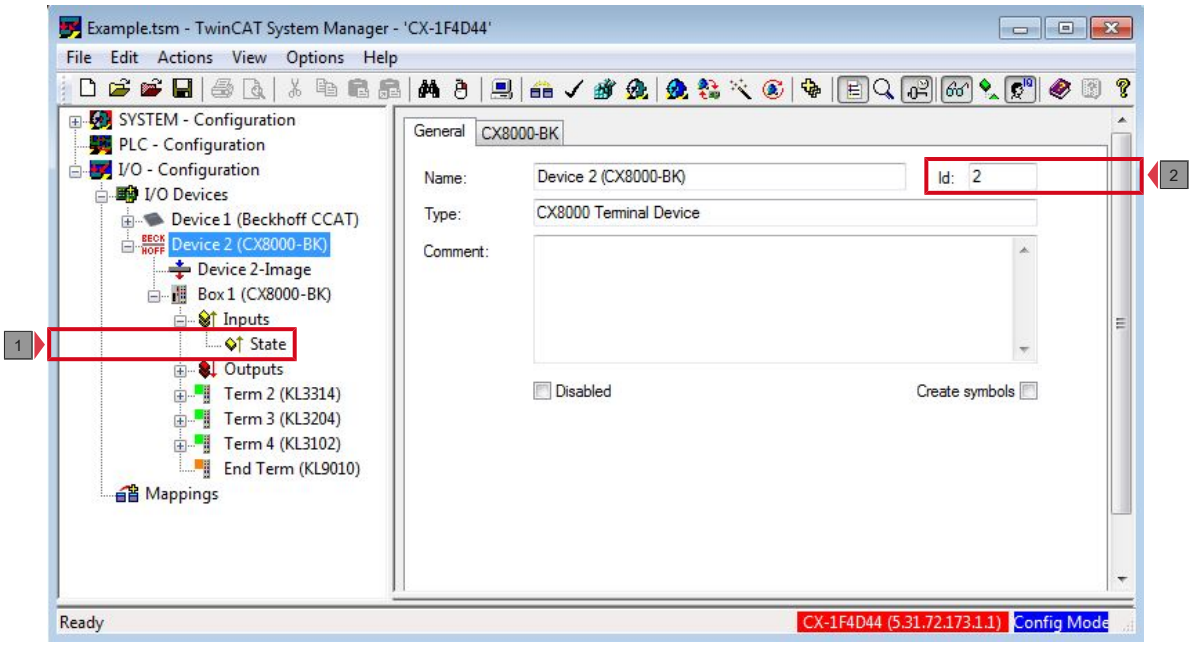

Fig. 2: K-Bus Interface

K-bus state

The K-bus status is saved in the state byte (see fig. K-bus interface "1"). If the value is 0 the K-bus is operating synchronously and without errors. If the value should be <>0 this can be an error, but it may also be *just* a notice that, for example, the K-bus requires longer than the employed task and is thus no longer synchronous to the task. The task time should be faster than 100 ms. We recommend a task time of less than 50 ms. The K-bus update time typically lies between one and five ms.

Bit 0 = K-Bus Err
Bit 1 = Terminal State Err
Bit 2 = Process Data Length Err
Bit 8 = No valid Inputs
Bit 9 = K-Bus Input Update busy
Bit 10 = K-Bus Output Update busy
Bit 11 = Watchdog Err
Bit 15 = Acyc. Function atcive (e.g. K-Bus Reset)

If there is a K-bus error, this can be reset via the IOF_DeviceReset function block (in the TcIoFunctions.lib).

The NetID is that of the CX80xx and can thus be entered as an empty string, the Device ID (see fig. K-bus Interface "2") is to be taken from the System Manager.

E-bus interface

The operation of E-bus terminals and EtherCAT devices is possible on the CX80xx.

The CX80xx recognizes these terminals automatically on scanning, reads out the terminal types and automatically places them in the System Manager.

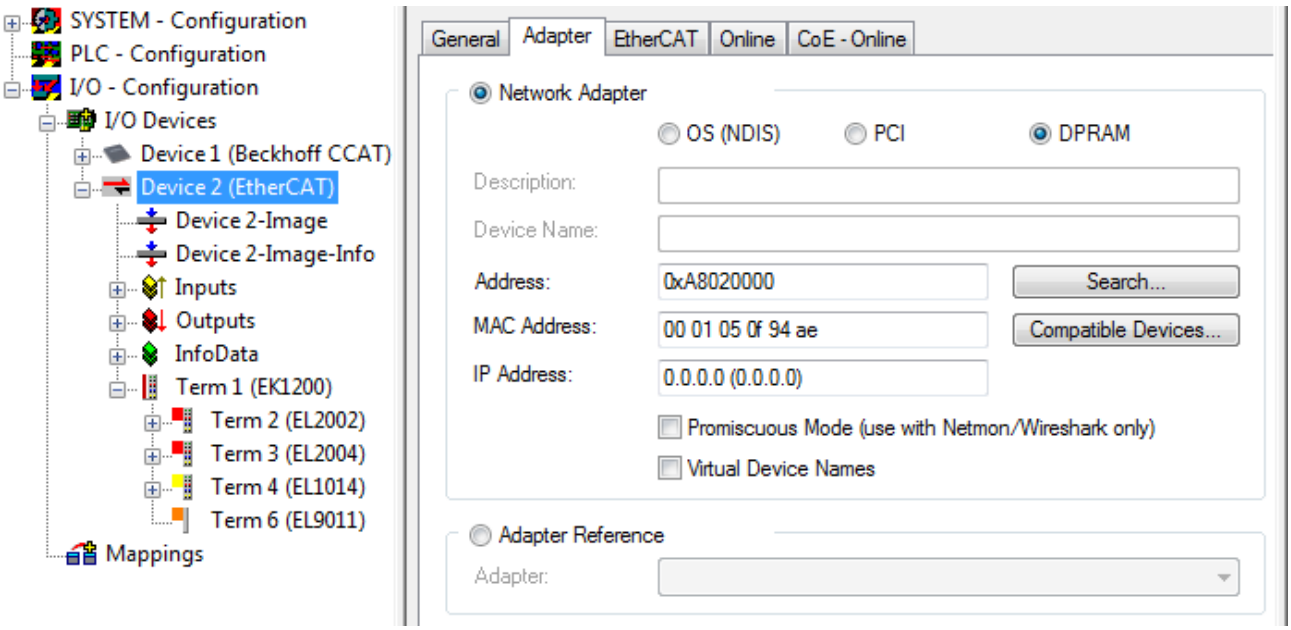

Note	**DC Distributed Clocks** The CX80xx series is not suitable for the use of EtherCAT slaves that use or need distributed clocks functionality.

6.3.3 PROFIBUS

6.3.3.1 CX8030

6.3.3.1.1 PROFIBUS Interface

PROFIBUS communication takes place via the D-sub port X101. The CX8030 supports the automatic slave scanning function. To this end the GSD file must be stored in the folder \TwinCAT\IO\PROFIBUS.

Note	**No ADS via PROFIBUS** The CX8030 does not support the ADS via PROFIBUS. The program download and debugging can take place exclusively via the Ethernet interface.

PROFIBUS address (only in slave mode)

The PROFIBUS address can be assigned using the DIP switch or permanently assigned in the System Manager. If the address is permanently defined, the address switch is ignored (see DIP switch [▶ 32]).

GSD file

The GSD file for PROFIBUS devices should be stored in the TwinCAT folder \TwinCAT\IO\PROFIBUS.

DpState

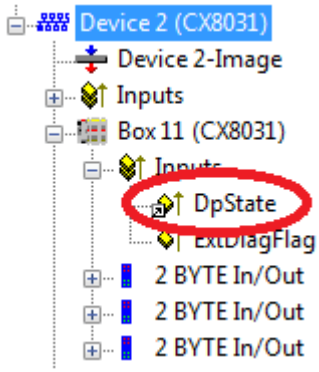

You can display the status of the PROFIBUS communication via the DpState and ascertain whether the slave is exchanging data (DpState=0) or whether there is an error or a problem.

0 = No error
1 = Station deactivated
2 = Station not exists
3 = Master lock
4 = Invalid slave response
5 = Parameter fault
6 = Not supported
7 = Config fault
8 = Station not ready
9 = Static diagnosis
10 = Diagnosis overflow
11 = Physical fault
12 = Data-Exchange left
13 = Severe bus fault
14 = Telegram fault
15 = Station has no resources
16 = Service not activated
17 = Unexpected telegram

18 = Station ready
31 = only for EtherCAT gateways: WC-State of cyclic EtherCAT frame is 1
128 = slave, waiting for data transfer (or DP-Master in CLEAR-Mode)
129 = slave, waiting for configuration
130 = slave, waiting for parameter
131 = slave, waiting for baudrate

ExtDiagFlag

The flag indicates whether slave diagnosis is active. It can be read via the System Manager or the PLC through ADS (see ADS interface [▶ 54]).

Note	**Grayed out System Manager functions** In contrast to other PROFIBUS masters from Beckhoff, not all PROFIBUS features are supported. Therefore, some options are grayed out in the System Manager or are not displayed. See Technical data CX8030 PROFIBUS.

Also see about this

- Technical data - PROFIBUS [▶ 17]

6.3.3.2 CX8031

6.3.3.2.1 PROFIBUS Interface

PROFIBUS communication takes place via the D-sub port X101.

Note	**No ADS via PROFIBUS** The CX8031 does not support the ADS via PROFIBUS. The program download and debugging can take place exclusively via the Ethernet interface.

PROFIBUS address

The PROFIBUS address can be assigned using the DIP switch or permanently assigned in the System Manager. If the address is permanently defined, the address switch is ignored (see DIP switch [▶ 32]).

GSD file

The GSD file is located in the TwinCAT folder \TwinCAT\IO\PROFIBUS. File name C8310CD7.gsd, the matching image is CX8031.dib. Insert these two files, image and GSD file, into your master configuration software.

PROFIBUS DpState

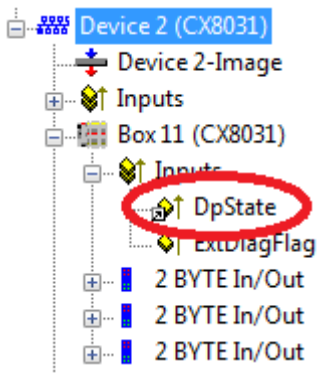

You can display the status of the PROFIBUS communication via the DpState and ascertain whether the slave is exchanging data (DpState=0) or whether there is an error or a problem.

0 = No error
1 = Station deactivated
2 = Station not exists
3 = Master lock
4 = Invalid slave response
5 = Parameter fault
6 = Not supported
7 = Config fault
8 = Station not ready
9 = Static diagnosis
10 = Diagnosis overflow
11 = Physical fault
12 = Data-Exchange left
13 = Severe bus fault
14 = Telegram fault
15 = Station has no ressources
16 = Service not activated
17 = Unexpected telegram
18 = Station ready
31 = only for EtherCAT gateways: WC-State of cyclic EtherCAT frame is 1
128 = slave, waiting for data transfer (or DP-Master in CLEAR-Mode)
129 = slave, waiting for configuration
130 = slave, waiting for parameter
131 = slave, waiting for baudrate

PROFIBUS ExtDiagFlag

Has no meaning in the case of the slave.

6.3.3.2.2 PROFIBUS process data

The CX8031 can exchange up to 240 bytes of process data with the PROFIBUS master in the input and output direction via PROFIBUS. Various kinds of process data can be defined by means of the GSD file.

The data are transmitted by default in the Intel format. If your controller requires the data in the Motorola format they must be turned accordingly.

You can proceed in 3 possible ways here.

- Turning the data on the PLC, i.e. on the CX side, with a simple ROR command (example for ST: VarProfibus:=ROR (VarAnalog,8); (* both variables are of the type WORD*))
- Turning the data on the master side
- Turning the data in the System Manager

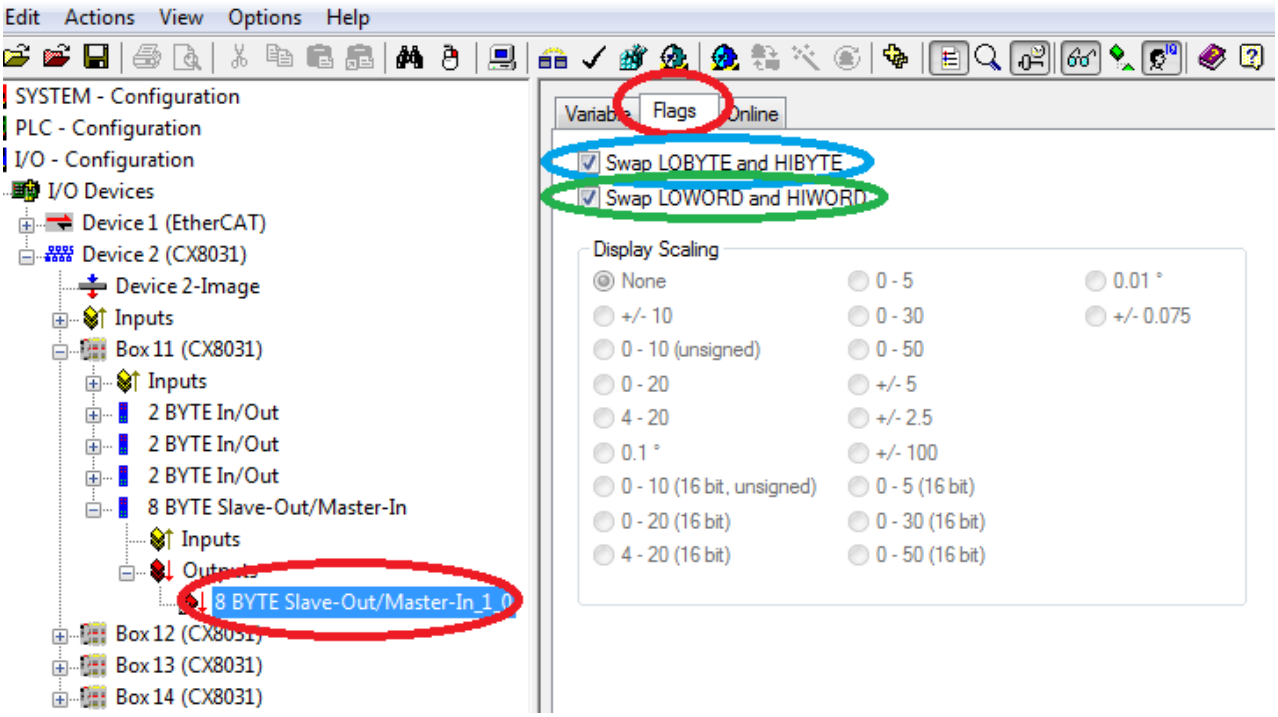

To do this, go to the variable that you wish to turn, select Flags and tick the option that you need. In the case of WORD variables you can only swap the LO and HI byte, in the case of DWORDs you can additionally swap the WORD.

Example: for DWORD

(Intel format)

6.3.3.2.3 Virtual slave interface for PROFIBUS

The virtual slave interface enables the creation of up to three virtual slaves on the same hardware interface. This enables the user to exchange more data with a PROFIBUS master or also to establish a connection with a second PROFIBUS master.

A maximum of 240 bytes of data can be configured for each slave, i.e. in total you can exchange 4 x 240 bytes of data in each direction.

Append a maximum of four CX8031 devices to your PROFIBUS device (fig. 1.0). Each of these devices is given a PROFIBUS address via the System Manager which can also be linked with the address selector (see Address switch [▶ 32]). Append the process data under the box (figs. 1.1 and 1.2); these may not exceed 240 bytes of input data of 240 bytes of output data. For the PROFIBUS master configure each of the four slaves like an independent device.

It is also permitted to connect one or more slaves to a second PROFIBUS master. The master must support the multi-master capability. You do not need to make any further settings on the CX8031 for this.

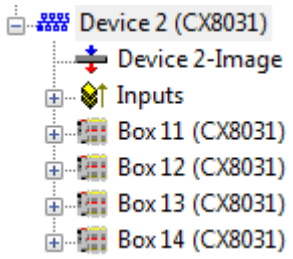

Fig. 1.0 Creation of the 4 PROFIBUS slave devices

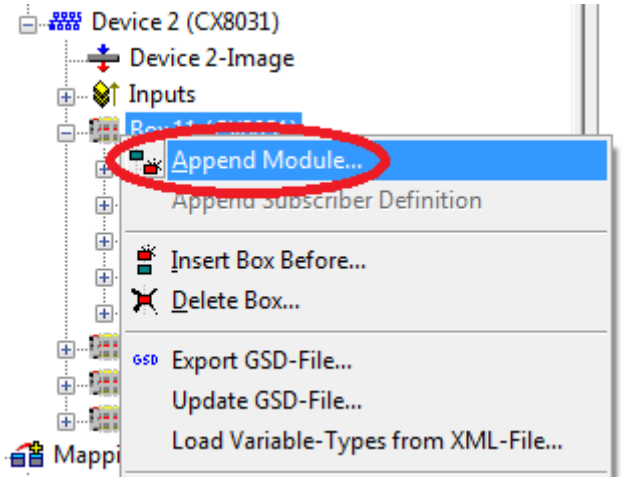

Fig. 1.1 Appending the PROFIBUS modules

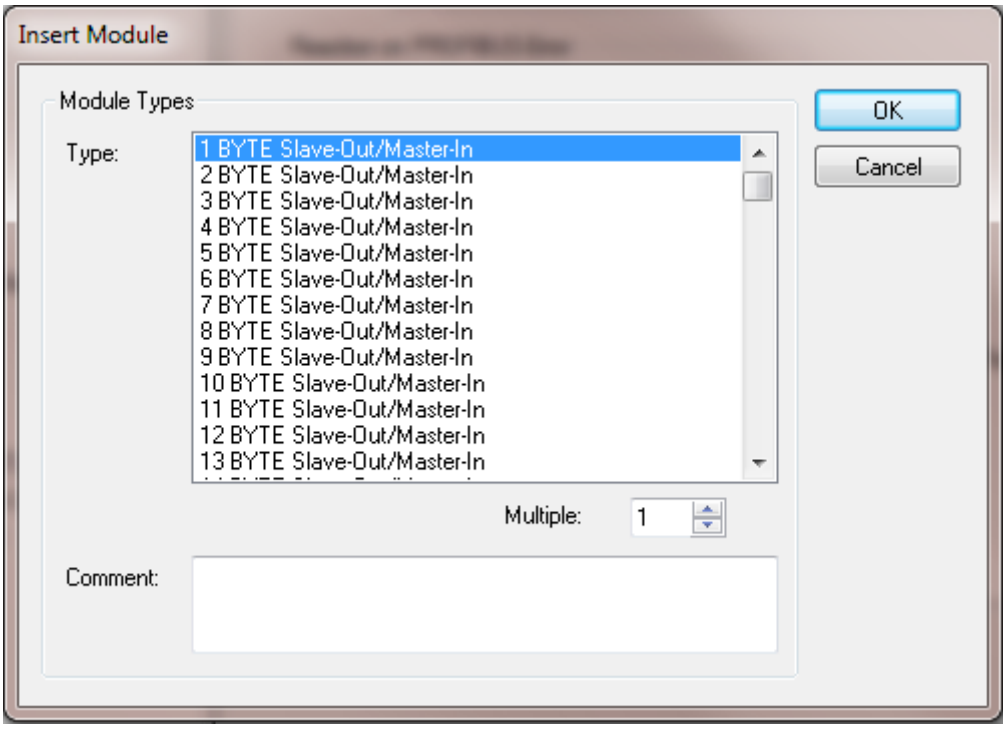

Fig. 1.2 Selection of the PROFIBUS modules

6.3.4 Web Services

Upnp webpages

There is a Upnp webpage on the CX80xx for diagnostics.

User name: guest
Password: 1

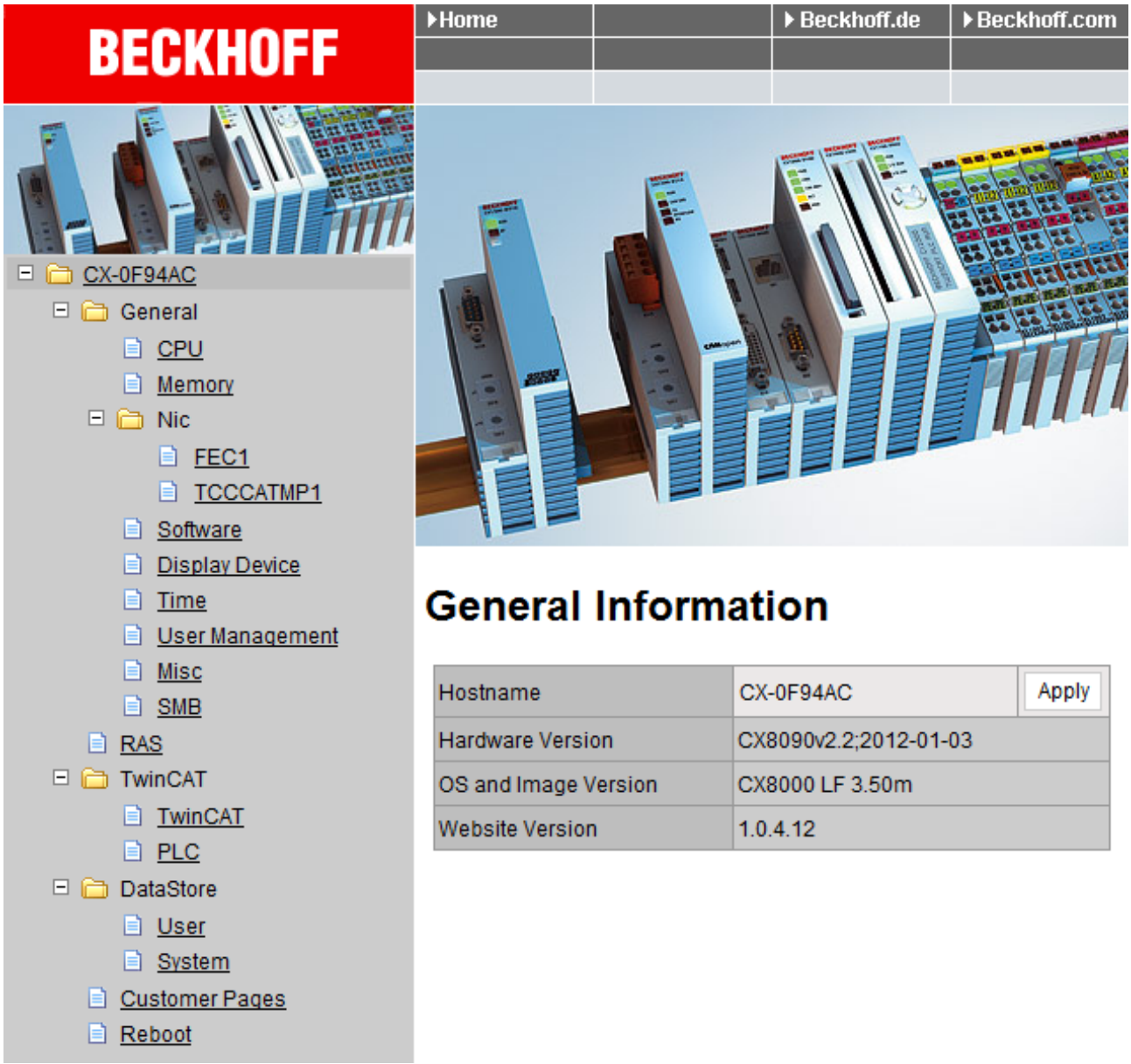

Enter the IP address or the device name.

Example

http://**cx-0f94ac**/config

http://**172.16.17.55**/config

The diagnostic page was revised starting from image v354c.

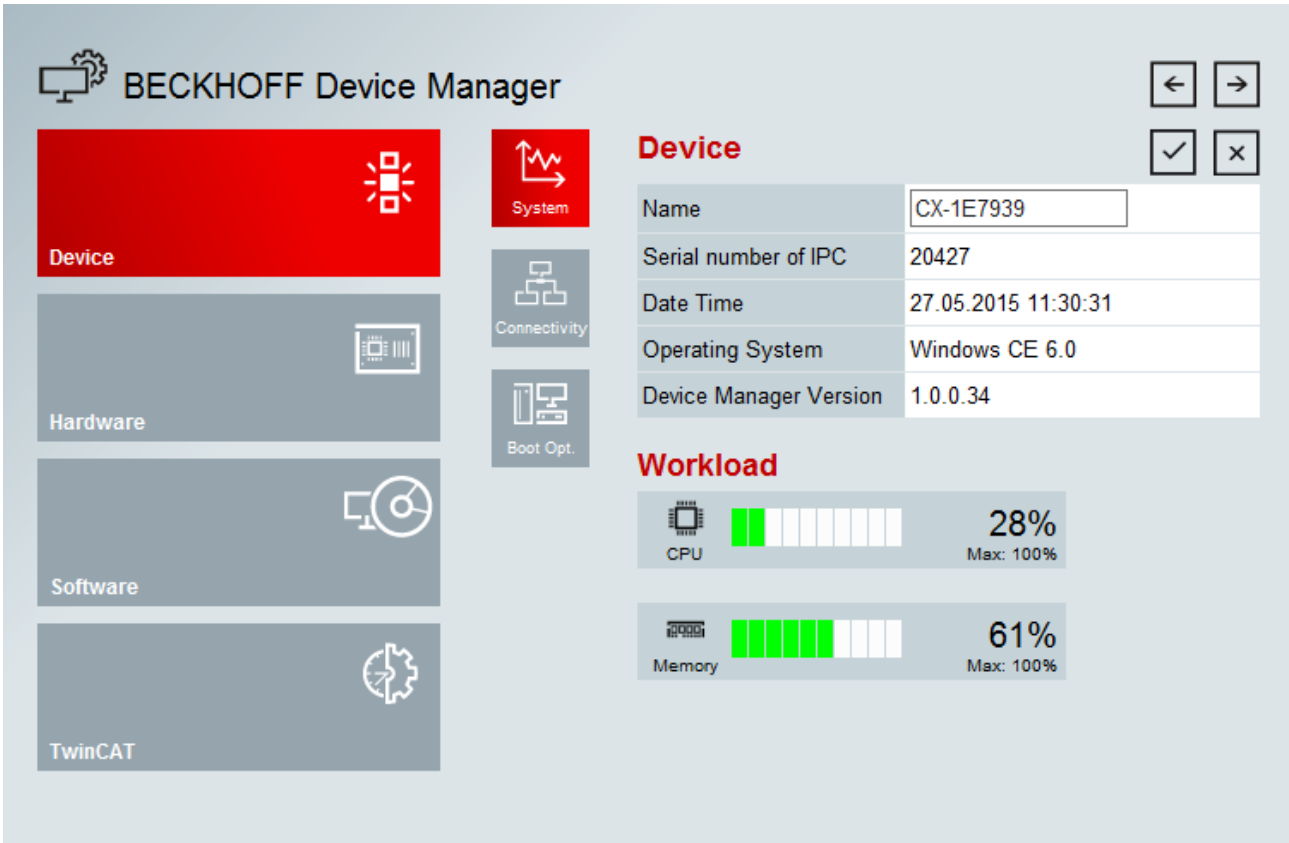

Web visualization

There is a web visualization on the CX80xx. This can be prepared and activated with the help of the PLC Control in TwinCAT.

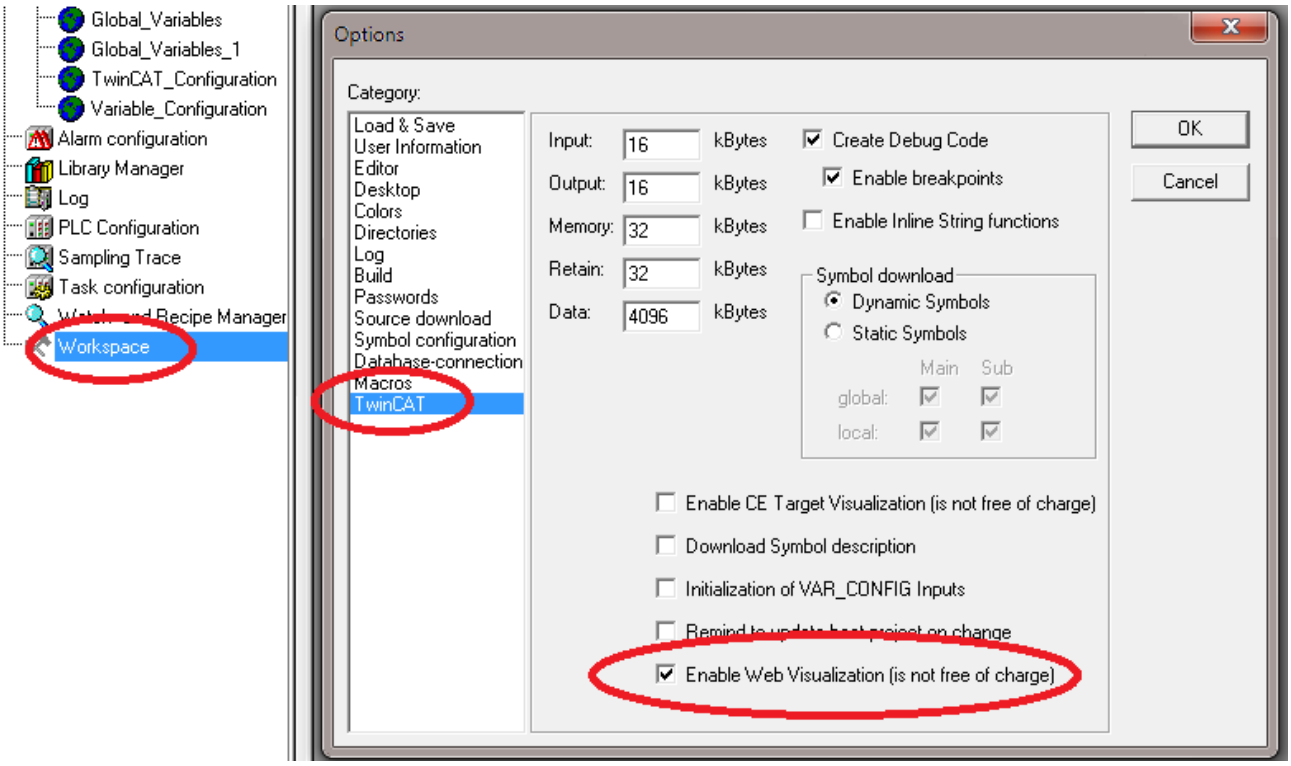

The call is made via the IP address or the device name in a web browser.
Further information can be taken from the documentation on the web visualization (see TwinCAT Supplements PLC HMI Web).

Example

http://**cx-0f94ac**/TcWebVisu/

http://**172.16.17.44**/TcWebVisu/

Ascertain before logging in (i.e. in the logged out condition) whether a ADS connection is established to the CX – "TwinCAT Running" in the bottom right-hand corner must be green. If that is not the case, please go onto Online/Selection of the target system again and call the CX once again.

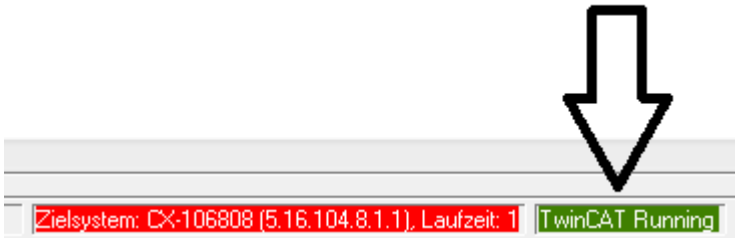

The following path must be specified for downloading the web data for the web user interface:

\hard disk\twincat\boot\webvisu\

If that is not the case, the PLC Control will copy the data into the wrong folder and the webpage will be displayed incorrectly or not at all.

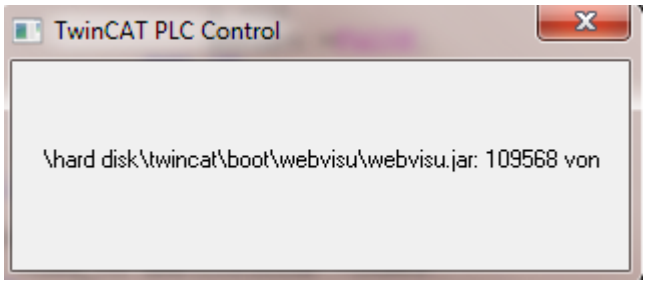

Remote Display

This page describes the steps for remotely controlling a CE device with CE operating system from a further PC by **'Remote Display'**.

Software required on the PC:

- Windows NT, Windows 2000, Windows XP or Windows 7
- Microsoft Remote Display (CERHOST, available license-free from Microsoft)

Establishing the connection

The "Remote Display" tool is started on the PC. The address of the CE device can now be entered under the menu option "File - > Connect"; this can be both the TCP-IP address or, if available, also the name of the CE device.

If the CE device is provided with password protection, then the password must also be entered accordingly. No password is set in the delivery condition.

After entering the target address, the user interface of the CE device is available for remote control on the PC.

Download : https://infosys.beckhoff.com/content/1033/cx803x_hw/Resources/zip/1608562059.zip

6.3.5 Real Time Clock (RTC)

The RTC is read out via the FB_LocalSystemTime function blocks and can be set with the NT_SetLocalTime block (see TcUtilities.lib).

The RTC is supplied by the battery and can thus continue to run in the power-off state.

6.3.6 1-second UPS (Uninterruptible Power Supply)

Technical concept

The 1-second UPS is an UltraCap capacitor, which, in the event of a voltage outage, continues to supply power to the processor for approx. 4 to 5 seconds, so that persistent data can be saved. Data saving generally takes less than 4 to 5 seconds. However, due to ageing of the components used, one should assume that the UPS can provide power for a maximum of 1 second. You can assume that data saving continues to work smoothly, even after many years. If you save data yourself, we recommend that this should take place within 1 second. Should it take longer, we would advise against it.

The 1-second UPS supplies neither the K-bus nor the E-bus with power. Please note that the data of these devices may already be invalid when the 1-second UPS is activated. Also, the fieldbus system (or Ethernet) may not work or not work properly once the 1-second UPS was activated.

Saving of the persistent data only takes place in conjunction with the function block FB_S_UPS_CX80xx. This block must be called cyclically. We strongly recommend using the default values for the block.

Saving and loading persistent data

The persistent data are stored on the SD card as a wdp file. When the PLC starts up, the wdp file is loaded from the SD card, saved there as a wd~-file (backup), and then deleted. Another current wpd file is not written until the system is shut down or the 1-second UPS is activated. If no wdp file is present when the CX starts up, the persistent data are invalid and are deleted (default setting).
The reason is that the 1-second UPS was activated before the TwinCAT PLC was started during startup of the CX. In this case no persistent data were saved, since the system was unable to ensure sufficient buffer time for saving the data.

Loading a backup of the persistent data

To load the persistent data from the backup (wp~-file), it has to be enabled in the System Manager.

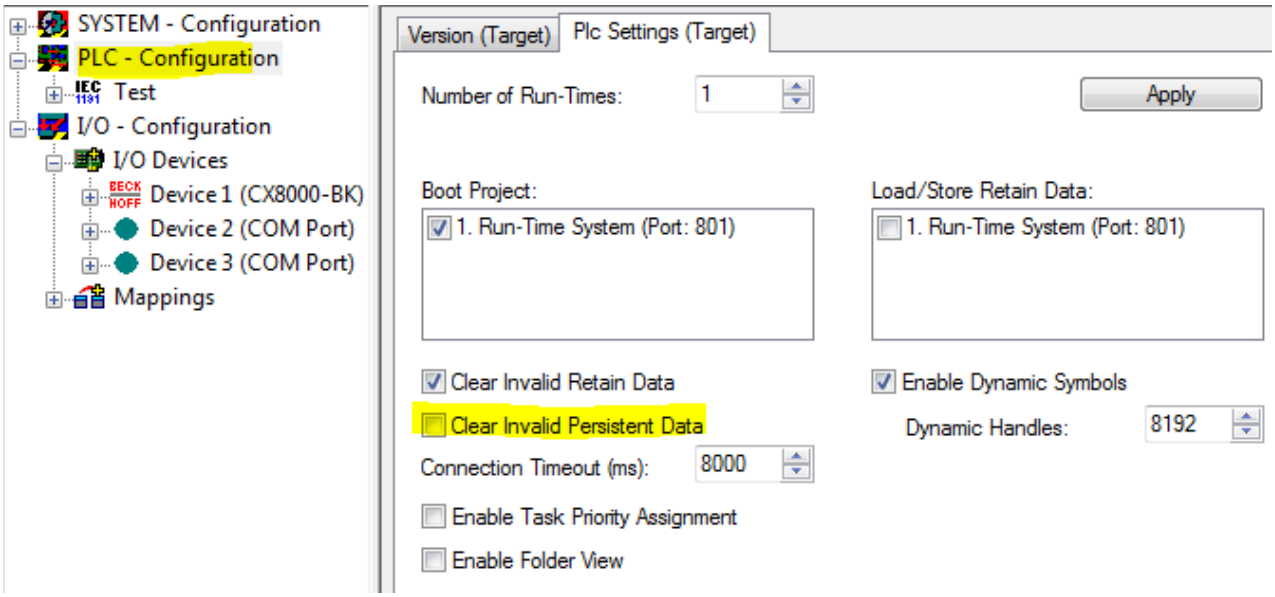

Or via the following registry entry:

[HKEY_LOCAL_MACHINE\SOFTWARE\Beckhoff\TwinCAT\Plc]"ClearInvalidPersistentData"= 0

The default factory setting is "1".

Checking whether current persistent data (from wdp file) or saved persistent data from the backup (wd~-file) were loaded

In this example, the CX8090 indicates via the ERR LED whether the persistent data were loaded. The LED cannot be used for other CX8xxx models.

```
IF systeminfo.bootDataFlags.4 AND NOT
systeminfo.bootDataFlags.5 THEN


F_CX8090_LED_ERR(eLED_GREEN_ON);     (* persistent
data is OK *)

ELSIF systeminfo.bootDataFlags.4 AND systeminfo.bootDataFlags.5
THEN


F_CX8090_LED_ERR(eLED_RED_ON);
(* load backup persistent data *)

ELSE

    F_CX8090_LED_ERR(eLED_RED_FLASHING_200ms); (* no
persistent data *)

END_IF
```

Note	**Purpose of the 1-second UPS** The 1-second UPS should only be used for managing the persistent data. Other applications are not supported and are not covered by our complaints procedure. Retain data cannot be used for the 1-second UPS!

6.3.7 CPU load

In the delivery condition the CPU load display is deactivated on all CX80xx devices (it is displayed with a constant 10%). The CPU load display is deactivated because it accounts for a considerable portion of the CPU load itself. The CPU load can be activated for brief diagnostic help; however, we recommend that you deactivate it again after the diagnostics.

HKEY_LOCAL_MACHINE/SOFTWARE/BECKHOFF/TWINCAT/RTime/EnableRTimeMeasurement 0 deactivated, 1 activated

A TwinCAT restart of the CX80xx is necessary after making the setting.

Note	**CPU load** The CPU load is calculated internally with 10 ms. The CPU load display may fluctuate very strongly if one or more tasks exceeding 10 ms are used.

7 Programming

7.1 Library for CX80xx

Download : https://infosys.beckhoff.com/content/1033/cx803x_hw/Resources/zip/1608565003.zip

7.2 Seconds UPS

7.2.1 Function blocks

FUNCTION_BLOCK FB_S_UPS_CX80xx

```
                    FB_S_UPS_CX80XX

sNetID : T_AmsNetId                 bPowerFailDetect : BOOL
iPLCPort : UINT                      eState : E_S_UPS_State
tTimeout : TIME
eUpsMode : E_S_UPS_Mode
ePersistentMode : E_PersistentMode
tRecoverTime : TIME
```

The FB_S_UPS function block can be used on the CX80xx with the seconds UPS in order to activate the seconds UPS from the PLC. This allows the persistent data to be saved and a quick shutdown to be performed in the event of a power failure. If possible the default values of the INPUTs of the FB_S_UPS should be retained.

Attention	**Loss of data** The seconds UPS can be used only for a few seconds in the event of a power failure in order, for example, to save persistent data. The data must be saved in the fast persistent mode "SPDM_2PASS", even though this can lead to real-time violations. Sufficient router memory must be configured for the storage of the persistent data!

The second UPS does not have sufficient capacity for bridging power failures. Saving can take place only on Micro SD cards.

A QuickShutdown is performed automatically in the eSUPS_WrPersistData_Shutdown mode (standard setting) after the storage of the persistent data.

In the eSUPS_WrPersistData_NoShutdown mode only the persistent data are saved, no QuickShutdown is performed.

In the eSUPS_ImmediateShutdown mode a QuickShutdown is executed immediately without saving data.

In the eSUPS_CheckPowerStatus mode only a check is performed as to whether a power failure has occurred. If this is the case, the module only switches back to the PowerOK state after the expiry of tRecoverTime (10s).

Independent of the mode and thus independent of the saving or the shutting down of the controller, the UPS switches the main board off after the capacitors have discharged, even if the voltage has returned in the meantime.

Attention	**Caution when using files:** If other applications or the PLC keep other files open or write to them, this can lead to faulty files if the UPS switches off the controller.

VAR_INPUT

```
VAR_INPUT
    sNetID      : T_AmsNetId := '';            (* '' = local netid *)
    iPLCPort    : UINT := AMSPORT_R0_PLC_RTS1;    (* PLC Runtime System for writing persis-
tent data *)
    iUPSPort    : UINT := 16#4A8;          (* Port for reading Power State of UPS, dafault 16#4A8 *)
    tTimeout    : TIME := DEFAULT_ADS_TIMEOUT;    (* ADS Timeout *)
    eUpsMode    : E_S_UPS_Mode := eSUPS_WrPersistData_Shutdown; (* UPS mode (w/wo writing persis-
tent data, w/wo shutdown) *)
    ePersistentMode : E_PersistentMode := SPDM_2PASS; (* mode for writing persistent data *)
    tRecoverTime    : TIME := T#10s;           (* ON time to recover from short power fail-
ure in mode eSUPS_WrPersistData_NoShutdown/eSUPS_CheckPowerStatus *)
END_VAR
```

E_S_UPS_Mode

sNetID : AmsNetID of the controller.

iPLCPort : Port number of the PLC runtime system (AMSPORT_R0_PLC_RTS1 = 801, AMSPORT_R0_PLC_RTS2 = 811, AMSPORT_R0_PLC_RTS3 = 821, AMSPORT_R0_PLC_RTS4 = 831).

iUPSPort : Port number via which the UPS status is read (standard value is 16#4A8).

tTimeout : Timeout for the execution of the QuickShutdown.

eUpsMode : The eUpsMode defines whether persistent data are to be written and whether a QuickShutdown is to be performed.
Standard value is eSUPS_WrPersistData_Shutdown, i.e. with writing of the persistent data and then QuickShutdown. See E_S_UPS_Mode.

ePersistentMode : Mode for the writing of the persistent data. Standard value is SPDM_2PASS.
SPDM_2PASS, all persistent data are saved at once, which can lead to the cycle time being exceeded.
SPDM_VAR_BOOST, here, each persistent variable is written separately; if there is a large amount of persistent data this can accordingly take many cycles. This is not recommended as some data may be lost if the time of the seconds UPS is not sufficient.

tRecoverTime : Time after which the UPS reverts to the PowerOK status in the case of UPS modes without shutdown.
The tRecoverTime must be somewhat longer than the maximum holding time of the UPS, since the UPS switches off even when the voltage returns.

VAR_OUTPUT

```
VAR_OUTPUT
    bPowerFailDetect    : BOOL;        (* TRUE while powerfailure is detected *)
    eState      : E_S_UPS_State;   (* current ups state *)
END_VAR
```

E_S_UPS_State

bPowerFailDetect : True during the power failure; False if the supply voltage is present.

eState : Internal state of the function block, for values see E_S_UPS_State.

VAR_GLOBAL

```
VAR_GLOBAL
    eGlobalSUpsState : E_S_UPS_State;    (* current ups state *)
END_VAR
```

E_S_UPS_State

eGlobalUpsState : Internal state of the function block as a global copy of the VAR_OUTPUT **eState**; for values see E_S_UPS_State.

Prerequisites

Development environment	Target platform	Hardware	PLC libraries to be linked
TwinCAT v2.11.0 build 2220 or higher (R3)	ARM	Seconds UPS	TcSystemCX80xx.lib

7.2.2 Data types

TYPE E_S_UPS_Mode

```
eSUPS_WrPersistData_Shutdown: Schreiben der Persistenten Daten und dann QuickShutdown
eSUPS_WrPersistData_NoShutdown: Nur Schreiben der Persistenten Daten (kein QuickShutdown)
eSUPS_ImmediateShutdown: Nur QuickShutdown (kein Schreiben der Persistenten Daten)
eSUPS_CheckPowerStatus: Nur Status ermitteln (weder Schreiben der Persistenten Daten noch QuickShut-
down)
```

Prerequisites

Development environment	Target platform	Hardware	PLC libraries to be linked
TwinCAT v2.11.0 build 2220 or higher (R3)	ARM	Seconds UPS	TcSystemCX80xx.lib

TYPE E_S_UPS_State

```
eSUPS_PowerOK:
    in allen Modi: Versorgungsspannung ist OK

eSUPS_PowerFailure:
    in allen Modi: Versorgungsspannung fehlerhaft (steht nur einen Zyklus an)

eSUPS_WritePersistentData:
    im Modus eSUPS_WrPersistData_Shutdown: Schreiben der Persistenten Daten ist aktiv
 im Modus eSUPS_WrPersistData_NoShutdown: Schreiben der Persistenten Daten ist aktiv

eSUPS_QuickShutdown:
    im Modus eSUPS_WrPersistData_Shutdown: QuickShutdown ist aktiv
 im Modus eSUPS_ImmediateShutdown: QuickShutdown ist aktiv

eSUPS_WaitForRecover:
    im Modus eSUPS_WrPersistData_NoShutdown: Warten auf Wiederkehr der Spannung
 im Modus eSUPS_CheckPowerStatus: Warten auf Wiederkehr der Spannung

eSUPS_WaitForPowerOFF:
    im Modus eSUPS_WrPersistData_Shutdown: Warten auf das Abschalten durch die USV
 im Modus eSUPS_ImmediateShutdown: Warten auf das Abschalten durch die USV
```

Prerequisites

Development environment	Target platform	Hardware	PLC libraries to be linked
TwinCAT v2.11.0 build 2220 or higher (R3)	ARM	Seconds UPS	TcSystemCX80xx.lib

7.3 Diagnostics

7.3.1 FUNCTION F_CX80xx_ADDRESS

With this function the address selection switch or the DIP switch of the CX80xx device can be read out. Here, for example, you can activate different parts of the program depending on the address by reading the switch position.

```
F_CX80XX_ADDRESS
iCX_Typ : INT F_CX80xx_Address : INT
```

VAR_INPUT

```
VAR_INPUT
    iCX_Typ       : INT;
END_VAR
```

iCX_Typ : The CX type used is entered here - just the number without the designation CX: for example, CX8031 is then entered as 8031.

VAR_OUTPUT

```
F_CX80xx_ADDRESS     : INT;
```

F_CX80xx_ADDRESS : -1, non-implemented CX, address of the switch

Prerequisites

Development environment	Target platform	Hardware	PLC libraries to be linked
TwinCAT v2.11.0 build 2220 or higher (R3)	ARM	CX80xx	TcSystemCX80xx.lib

7.4 PROFIBUS

7.4.1 CX8030

7.4.1.1 CX8030 ADS Interface

ADS NetId of the PROFIBUS interface

A NetId is required for the ADS communication. This can be found in the ADS tab of the PROFIBUS interface in the TwinCAT System Manager.

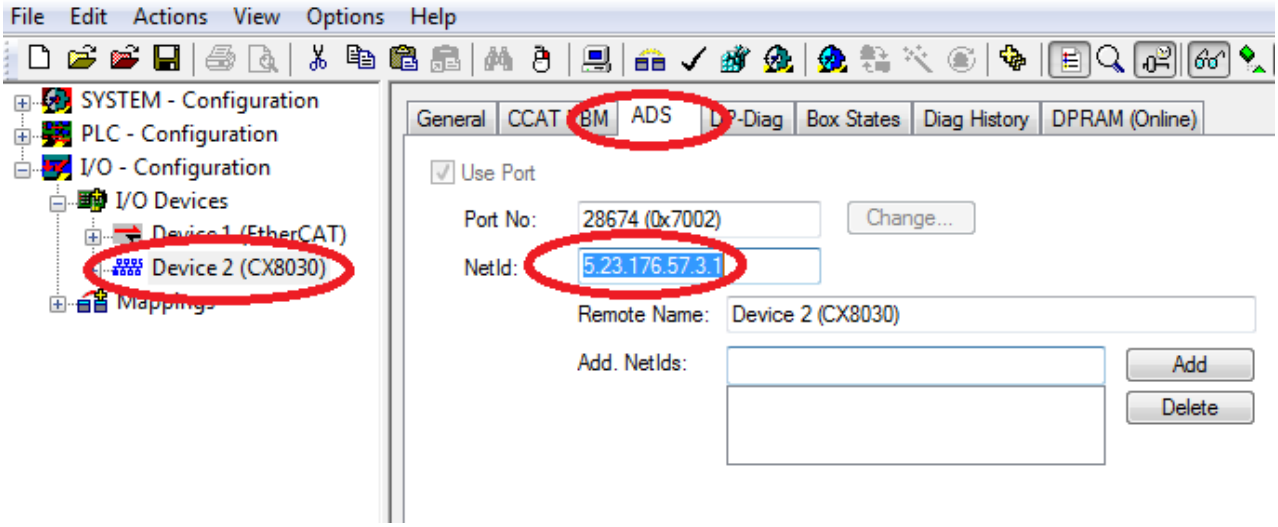

ADS Interface

All acyclic data are transmitted to or from the CX8030 via ADS-Read, ADS-Write or ADS-Write-Control. The CX8030 has its own Net-ID and supports the following ports:

Port	Description
200	Addresses the PROFIBUS interface itself, i.e. data stored locally on the PROFIBUS interface, for which usually no additional bus access is required.
0x1000 - 0x107E	Addresses a connected PROFIBUS device, whereby the address is calculated from port 0x1000 (or 0x1000 + slave address); always includes bus access.

ADS-Read

An overview of the IndexGroups/IndexOffsets supported by the CX8030 during ADS-Read is provided below.

IndexGroup for local CX8030 addressing (port 200)

IndexGroup (Lo-Word)	IndexGroup (Hi-Word)	IndexOffset	Description
0xF181	0x0000-0x007E	BYTE offset within the data	This will read the diagnostic data of a configured DP slave. The station address is calculated from the IndexGroup(Hi-Word). If the ADS Read is answered without error (error code = 0), the data will contain the diagnostic data of a configured DP slave described in section Slave Diagnosis [▶ 58].
0xF830	0x0000-0x007E	always 0	Can be used to determine which DP slaves are present on the PROFIBUS, regardless of whether they were configured or not; the station address is entered in the IndexGroup (high word). If the ADS-Read is answered without error (error code = 0), the corresponding DP slave has answered correctly. The data contain the Ident no. of the slave (BYTE offset 0-1) and the read CfgData (from BYTE offset 2).

IndexGroup for addressing of a configured PROFIBUS device (port 0x1000-0x107E)

IndexGroup (Lo-Word)	IndexGroup (Hi-Word)	IndexOffset	Description
0x00-0xFF	0x00	0x00-0xFF	This will send a DPV1-Read to the appropriate, configured DPV1 slave via a Class -1 connection; the DPV1 slot number corresponds to the IndexGroup, the DPV1 index corresponds to the IndexOffset. If the ADS-Read is answered without error (error code = 0), the data will contain the read DPV1 data (see section DPV1 [▶ 57])

ADS Write

An overview of the IndexGroups/IndexOffsets supported by the CX8030 during ADS-Write is provided below.

IndexGroup for addressing of a configured PROFIBUS device (port 0x1000-0x107E)

IndexGroup (Lo-Word)	IndexGroup (Hi-Word)	IndexOffset	Description
0x00-0xFF	0x00	0x00-0xFF	This will send a DPV1-Write to the appropriate, configured DPV1 slave via a Class -1 connection; the DPV1 slot number corresponds to the IndexGroup, the DPV1 index corresponds to the IndexOffset (see section DPV1 [▶ 57]).

ADS-WriteControl

An overview of services supported by the CX8030 for ADS WriteControl is provided below.

ADS-WriteControl for addressing a configured PROFIBUS device (port 0x1000-0x107E)

AdsState	DeviceState	State of the FC310x/ EL6731	Description
STOP (6)	0x00	RUN (5)	This will stop the slave, i.e. the process data connection to the relevant DP slave (Data_Exchange) is removed (with SetPrm,Unlock).
RUN (5)	0x00	STOP (6)	This will restart the slave after a stop, i.e. the process data connection to the relevant DP slave (Data_Exchange) is re-established (normal DP start-up).

7.4.1.2 DPV1 communication

On a C1 connection, the master supports the Read and Write services, and on the C2 connection it supports the Read, Write, Data_Transport, Initiate and Abort services.

C1 Connection (MSAC-C1)

The C1 connection is reserved for the master that cyclically exchanges data with the slave (C1 master). In order for a slave to be able to use the C1 connection, the slave must support DPV1 (this means that the line "DPV1_Slave = 1" and the key word "C1_Max_Data_Len" with an appropriate length must be in the GSD file). If it is also generally necessary to activate the C1 functionality by setting bit 7 in the **PrmData** byte 0 for the corresponding slave (this is done automatically for those Beckhoff devices that support DPV1).

MSAC-C1-Read is shown in ADS-Read, and MSAC-C1-Write is represented in ADS-Write:

MSAC-C1 Read

ADS-Read parameters	Meaning
Net-ID	Net-ID of the master (see the device's ADS [▶ 54] tab)
Port	0x1000 + station address of the slave
IndexGroup	Slot number (DPV1 parameter)
IndexOffset	Index (DPV1 parameter)
Length	Length of the data that is to be read
Data	In response: data that has been read

MSAC-C1 Write

ADS-Write parameters	Meaning
Net-ID	Net-ID of the master (see the device's ADS [▶ 54] tab)
Port	0x1000 + station address of the slave
IndexGroup	Slot number (DPV1 parameter)
IndexOffset	Index (DPV1 parameter)
Length	Length of the data that is to be written
Data	In request: data that is to be written

7.4.1.3 Slave Diagnosis

DP-State

Each DP slave has a status variable that indicates the current state of that DP slave. This status is maintained in real time, so that it is always adapted to the current DP slave data, and can be linked to a PLC variable (-> **DpState** of the slave):

Diagnostic data

Any DP slave can acyclically report DP diagnostic data during data exchange operation. The slave here sets the Diag_Flag in the response to the cyclic Data_Exchange telegram, as a result of which the DP master automatically reads the DP diagnostic data from the slave. This does not affect the Data-Exchange cycle in the Beckhoff DP master, because the DP diagnostic telegram is sent at the end of the cyclic Data-Exchange cycle, and before the beginning of the next cycle. If the DP diagnostic data read from the slave has changed from its previous state, the DP master sets the ExtDiagFlag variable, which can be linked to a variable in the controller program.

The DP slave's current diagnostic data is displayed in the system manager on the slave's **Diag** tab. It can also be read by the controller program via ADS [▶ 54], which will cause the "ExtDiagFlag" flag to be reset once more:

ADS-Read parameters	Meaning
Net-ID	Net-ID of the master (see the device's ADS [▶ 54] tab)
Port	200
IndexGroup	0x00yyF181 (yy = station address of the slave)
IndexOffset	offset within the diagnosis data
Length	Length of the diagnostic data that is to be read
Data	Diagnostic data

The diagnostic data contains the slave statistics (32 bytes) and the DP diagnostic data sent by the slave (up to 244 bytes), and is constructed as follows:

Offset	Meaning
Slave statistics	
0	Receive Error Counter (WORD): The number of faulty telegrams occurring while communicating with this slave.
2	Repeat Counter[8] (WORD): The repeat counters indicate how many repeats have had to be made, and how often. Repeat Counter[0] indicates how often it has been necessary to repeat a telegram for this slave once, Repeat Counter[1] shows how often a telegram for this slave has had to be repeated twice, and so on. The maximum number of retries is set with the parameter **Max Retry Limit** (see **bus parameters** dialog). The value range is from 0 to 8, therefore there are 8 repeat counters (for 1 to 8 retries)
18	reserved for extensions
20	NoAnswer Counter (DWORD): The number of telegrams in communication with this slave that have not received an answer. The first time that a slave fails to answer, the telegram is repeated up to **MaxRetryLimit** times, but if it does not answer even then, further telegrams are not repeated.
24-27	Last-DPV1-Error[4] (BYTE): The most recent faulty DPV1 response is entered here (byte 0: DPV1 service (bit 7 is set, thus indicating an error), byte 1: Error_Decode, byte 2: Error_Code_1 (Error_Class/ Error_Code), byte 3: Error_Code_2), see description of the DPV1 error codes [▶ 66]
27-31	reserved for extensions
from 32	**DP diagnostic data**

There follows a description of the DP diagnostic data

Offset	Meaning
0x00.0	StationNonExistent: slave did not reply to the last telegram
0x00.1	StationNotReady: slave still processing the Set_Prm / Chk_Cfg telegram
0x00.2	CfgFault: slave signaling a configuration error
0x00.3	ExtDiag: extended DiagData available and valid
0x00.4	NotSupported: slave does not support a feature requested via Set_Prm or Global_Control
0x00.5	InvalidSlaveResponse: slave response not DP-compatible
0x00.6	PrmFault: slave reports a parameterization error
0x00.7	MasterLock: slave currently exchanging data with another master
0x01.0	PrmReq: re-parameterize and reconfigure slave
0x01.1	StatDiag: slave signaling static diagnosis / DPV1 slave application not yet ready for data exchange
0x01.2	PROFIBUS DP slave
0x01.3	WdOn: DP watchdog on
0x01.4	FreezeMode: DP slave in freeze mode
0x01.5	SyncMode: DP slave in sync mode
0x01.6	reserved
0x01.7	Deactivated: DP slave has been deactivated
0x02.0	reserved
0x02.1	reserved
0x02.2	reserved
0x02.3	reserved
0x02.4	reserved
0x02.5	reserved
0x02.6	reserved
0x02.7	ExtDiagOverflow: too much extended data present
0x03	MasterAdd: station address of master with which slave is exchanging data
0x04, 0x05	IdentNumber
from 0x06	Extended DiagData

Extended DiagData

A distinction is made in the Extended DiagData between identification diagnosis, channel diagnosis and manufacturer-specific diagnosis. The first byte indicates the type of the diagnosis and the length of the associated data. Several diagnostic types can also follow one another in the Extended DiagData.

Header Byte

Bit	Meaning
0-5	Length of the associated diagnostic data, including header byte
6-7	0 = manufacturer-specific diagnosis (DPV1 is not supported) or DPV1 diagnosis (DPV1 is supported (DPV1_Enable = 1) in associated GSD file)
	Module diagnosis
	Channel diagnosis
	Revision number

Manufacturer-specific diagnosis

The structure of the manufacturer-specific diagnosis may be found in the documentation for the DP slave.

7.4.1.4 Uploading the Configuration

During operation the PROFIBUS can be scanned for new devices via ADS [▶ 54] Read:

ADS-Read parameters	Meaning
Net-ID	Net-ID of the master (see the device's ADS [▶ 54] tab)
Port	200
IndexGroup	0x00yyF830 (yy = station address, Beckhoff devices provide the same information as other devices)
IndexOffset	0
Length	1538
Data	Configuration data of the slave

If the device is from another manufacturer, or if the IndexGroup indicates that Beckhoff devices are to behave in exactly the same way as devices from other manufacturers, then the following information is returned in the ADS read response:

Offset	Description
0 -1	1
2 - 7	DP diagnostic data bytes 0-5 (see Slave Diagnosis [▶ 58])
8 - 251	DP configuration data (**CfgData**)

7.4.2 CX8031

7.4.2.1 PROFIBUS diagnostic data

The decentralized CX8031 controller enables you to send diagnostic data from the PLC. You may write your own diagnostic message for the master and fill it individually with data (see device-specific diagnostic data).

DP Diagnostic Data (DiagData)

The DP diagnostic data consists of six bytes of DP standard diagnosis, along with up to 238 bytes of device-specific diagnostic data.

When the DP diagnostic data changes, the slave reports this fact to the master, and the master will automatically fetch the changed diagnostic data. This means that DP diagnostic data is not included in the DP process data in real-time, but is always sent to the controller a few cycles later.

In TwinCAT the DP diagnostic data is read from the DP Master interface (FC310x, CX1500-M310) using ADS (see the section describing Slave Diagnosis in the FC310x documentation).

DP standard diagnostic data

Offset	Meaning
0x00.0	StationNonExistent: slave did not reply to the last telegram
0x00.1	StationNotReady: slave still processing the Set_Prm / Chk_Cfg telegram
0x00.2	CfgFault: slave signalling a configuration error
0x00.3	ExtDiag: extended DiagData available and valid
0x00.4	NotSupported: slave does not support a feature requested via Set_Prm or Global_Control
0x00.5	InvalidSlaveResponse: slave response not DP-compatible
0x00.6	PrmFault: slave reports a parameterization error
0x00.7	MasterLock: slave currently exchanging data with another master
0x01.0	PrmReq: re-parameterise and reconfigure slave
0x01.1	StatDiag: slave signalling static diagnosis / DPV1 slave application not yet ready for data exchange
0x01.2	PROFIBUS DP slave
0x01.3	WdOn: DP watchdog on
0x01.4	FreezeMode: DP slave in freeze mode
0x01.5	SyncMode: DP slave in sync mode
0x01.6	reserved
0x01.7	Deactivated: DP slave has been deactivated
0x02.0	reserved
0x02.1	reserved
0x02.2	reserved
0x02.3	reserved
0x02.4	reserved
0x02.5	reserved
0x02.6	reserved
0x02.7	ExtDiagOverflow: too much extended data present
0x03	MasterAdd: station address of master with which slave is exchanging data
0x04, 0x05	IdentNumber
from 0x06	Device-specific diagnostic data (extended DiagData)

Device-specific diagnostic data

Device-specific diagnostic data

The ADSWRITE block is used for sending diagnostic data. The current DP diagnosis sent to the bus can be read via ADSREAD. Please note that an additional 6 bytes (PROFIBUS standard DP diagnosis) are required for reading, i.e. the number of bytes that are read exceeds the number of bytes that were written by 6. The ADS parameters for the read process are identical.

Input parameters	Description
NETID	local NetId of the PROFIBUS device
PORT number	0x1000+slave address
IDXGRP	16#F481
IDXOFFS	0
LEN	max. 244
SRCADDR	Pointer to diagnostic data

Note	**Transmission of the diagnostic telegram** A diagnostic telegram is only transferred to the controller when the diagnostic data have changed.

Note	**Transmission of user-specific diagnostic data** Byte 0 of the data must contain a 0x08. Bytes 1 to 5 are overwritten by the CX. Byte 6 and higher can contain your own diagnostic data. Make sure that your own diagnostic data conforms to the PROFIBUS standard for user-specific diagnosis.

7.4.2.2 PROFIBUS DP-V1 communication

C1 Connection (MSAC-C1)

The C1 connection is reserved for the master that cyclically exchanges data with the slave (C1 master). In order for a slave to be able to use the C1 connection, the slave must support DPV1 (this means that the line "DPV1_Slave = 1" and the key word "C1_Max_Data_Len" with an appropriate length must be in the GSD file). If it is also generally necessary to activate the C1 functionality by setting bit 7 in the **PrmData** byte 0 (see the slave's **PROFIBUS** tab) for the corresponding slave (this is done automatically for those Beckhoff devices that support DPV1).

MSAC-C1-Read is mapped on ADS-Readind, MSAC-C1-Write on ADS-Writeinc:

PROFIBUS DPV1

The DP slave supports a DPV1-MSAC_C1 server connection that is established along with the cyclic connection. This can be used so that larger quantities of acyclic data can be transferred alongside the cyclic data. A DPV1 read telegram received by the master is reported to the PLC as an ADS read indication, while a DPV1 write telegram is reported to the PLC as an ADS write indication. The PLC program is then responsible for the read or write response. To do this, the ADS read response or ADS write response functions are to be called.

Settings in the System Manager

In order to transport the DP-V1 services into the PLC this function must be activated by specifying the port.

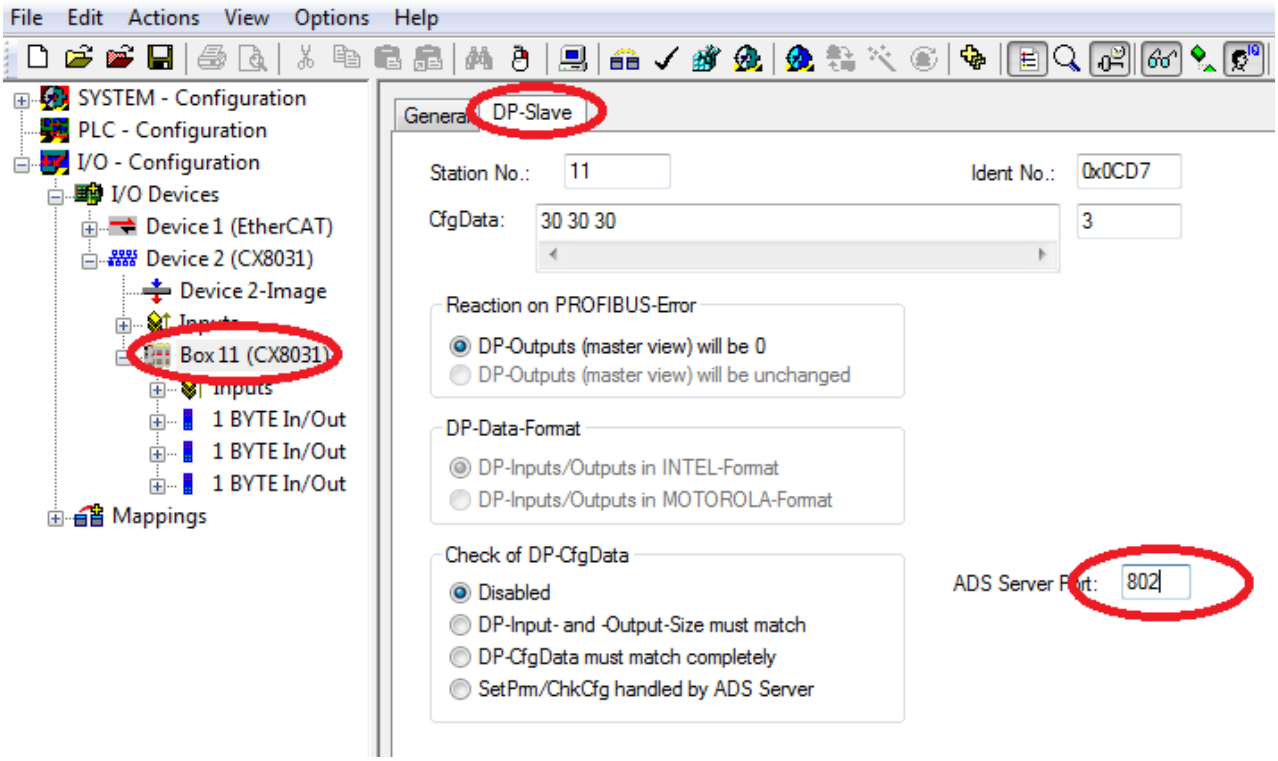

Port 0 deactivated, 802 PLC runtime system 1, task 1

MSAC-C1 Read

A DPV1-MSAC_C1 read indication is represented in an ADS read indication as follows:

ADS read indication parameter	Meaning
Source-Net-ID (NETID)	Net-ID of the slave (see the device's **ADS** tab)
Source-Port (PORT)	0x1000+slave address
Invoke-ID (INVOKEID)	A unique number that must reappear in the response
IndexGroup (IDXGRP)	Slot number (DPV1 parameter)
IndexOffset (IDXOFFS)	Index (DPV1 parameter)
Length (LENGTH)	Length of the data that is to be read

An ADS read response is represented in a DPV1-MSAC_C1 read response as follows:

ADS read response parameter	Meaning
Destination-Net-ID (NETID)	Net-ID of the slave (see the device's **ADS** tab)
Destination-Port (PORT)	0x1000+slave address
Invoke-ID (INVOKEID)	A unique number, as under indication
Result (RESULT)	Result of the read: 0 = no error, otherwise: bits 0-15 = standard ADS error codes, bits 16-23 = Error_Code_1, bits 24-31 = Error_Code_2, see description of the DPV1 error codes [▶ 66]
Length (LENGTH)	Length of the data that has been read
Data (DATAADDR)	read data

MSAC-C1 Write

A DPV1-MSAC_C1 write indication is represented in an ADS write indication as follows:

ADS write indication parameter	Meaning
Source-Net-ID (NETID)	Net-ID of the slave (see the device's **ADS** tab)
Source-Port (PORT)	0x1000+slave address
Invoke-ID (INVOKEID)	A unique number that must reappear in the response
IndexGroup (IDXGRP)	Slot number (DPV1 parameter)
IndexOffset (IDXOFFS)	Index (DPV1 parameter)
Length (LENGTH)	Length of the data that is to be written
Data (DATAADDR)	data that is to be written

An ADS read response is represented in a DPV1-MSAC_C1 read response as follows:

ADS read response parameter	Meaning
Destination-Net-ID (NETID)	Net-ID of the slave (see the device's **ADS** tab)
Destination-Port (PORT)	0x1000+slave address
Invoke-ID (INVOKEID)	A unique number, as under indication
Result (RESULT)	Result of the read: 0 = no error, otherwise: bits 0-15 = standard ADS error code, bits 16-23 = Error_Code_1, bits 24-31 = Error_Code_2, see description of the DPV1 error codes [▶ 66]
Length (LENGTH)	Length of the data that has been read

7.4.2.3 DPV1 Error Codes

In the event of an incorrect DPV1 access, the slave replies with 4 bytes of data (any values that are not described here are not defined in the DPV1 standard, and are therefore to be found in the slave's manual).

Byte 0	DPV1 service
0xD1	Data_Transport
0xD7	Initiate
0xDE	Read
0xDF	Write

Byte 1	Error_Decode
0x80	DPV1
0xFE	FMS
0xFF	HART

Byte 2		Error_Code_1
Error-Class (bits 4-7)	Error-Code (bits 0-3)	
0x0A	0x00	Application, Read Error
	0x01	Application, Write Error
	0x02	Application, Module Failure
	0x08	Application, Version Conflict
	0x09	Application, Feature Not Supported
0x0B	0x00	Access, Invalid Index
	0x01	Access, Write Length Error
	0x02	Access, Invalid Slot
	0x03	Access, Type Conflict
	0x04	Access, Invalid Area
	0x05	Access, State Conflict
	0x06	Access, Access Denied
	0x07	Access, Invalid Range
	0x08	Access, Invalid Parameter
	0x09	Access, Invalid Type
0x0C	0x00	Resource, Read Constrain Conflict
	0x01	Resource, Write Constrain Conflict
	0x02	Resource, Busy
	0x03	Resource, Unavailable

8 Ethernet X001 Interface

8.1 System introduction

8.1.1 Ethernet

Ethernet was originally developed by DEC, Intel and XEROX (as the "DIX" standard) for passing data between office devices. The term nowadays generally refers to the *IEEE 802.3 CSMA/CD* specification, published in 1985. Because of the high acceptance around the world this technology is available everywhere and is very economical. This means that it is easy to make connections to existing networks.

There are now a number of quite different transmission media: coaxial cable (10Base5), optical fiber (10BaseF) or twisted pairs (10BaseT) with screen (STP) or without screen (UTP). A variety of topologies such as ring, line or star can be constructed with Ethernet.

Ethernet transmits Ethernet packets from a sender to one or more receivers. This transmission takes place without acknowledgement, and without the repetition of lost packets. To achieve reliable data communication, there are protocols, such as TCP/IP, that can run on top of Ethernet.

MAC-ID

The sender and receiver of Ethernet packets are addressed by means of the MAC-ID. The MAC-ID is a 6 byte identification code unique to every Ethernet device in the world. The MAC-ID consists of two parts. The first part (i.e. the first 3 bytes) is a manufacturer identifier. The identifier for Beckhoff is 00 01 05. The next 3 bytes are assigned by the manufacturer and implement a unique serial number. The MAC-ID can, for example, be used for the BootP protocol in order to set the TCP/IP number. This involves sending a telegram containing the information such as the name or the TCP/IP number to the corresponding node. You can read the MAC-ID with the KS2000 configuration software.

The Internet Protocol (IP)

The internet protocol (IP) forms the basis of this data communication. IP transports data packets from one device to another; the devices can be in the same network, or in different networks. IP here looks after the address management (finding and assigning MAC-IDs), segmentation and routing. Like the Ethernet protocol, IP does not guarantee that the data is transported - data packets can be lost, or their sequence can be changed.

TCP/IP was developed to provide standardized, reliable data exchange between any number of different networks. TCP/IP is thus substantially independent of the hardware or software being used. Although the term is often used as if it were a single concept, a number of protocols are layered together: e.g. IP, TCP, UDP, ARP and ICMP.

Transmission Control Protocol (TCP)

The Transmission Control Protocol (TCP) which runs on top of IP is a connection-oriented transport protocol. It includes error detection and error handling mechanisms. Lost telegrams are repeated.

User Datagram Protocol (UDP)

UDP is connectionless transport protocol. It provides no control mechanism when exchanging data between sender and receiver. This results in a higher processing speed than, for example, TCP. Checking whether or not the telegram has arrived must be carried out by the higher-level protocol.

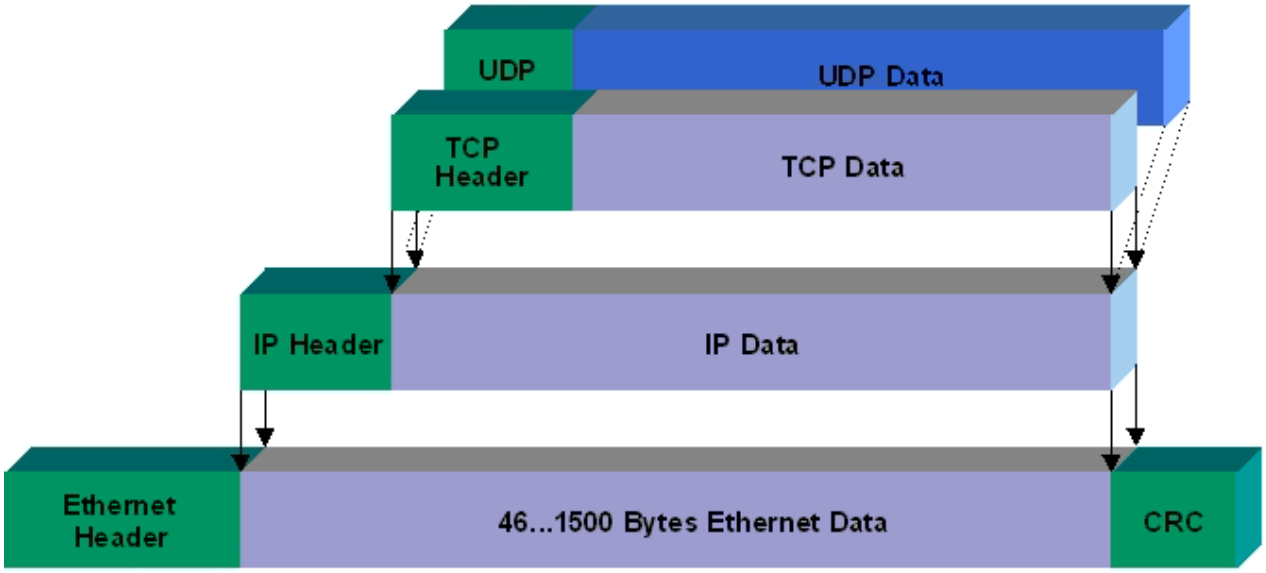

Fig. 3: Ethernet protocol

Protocols running on top of TCP/IP and UDP/IP

The following protocols can run on top of TCP/IP or UDP:

- ADS
- ModbusTCP

Both of these protocols are implemented in parallel on the Bus Coupler, so that no configuration is needed to activate the protocols.

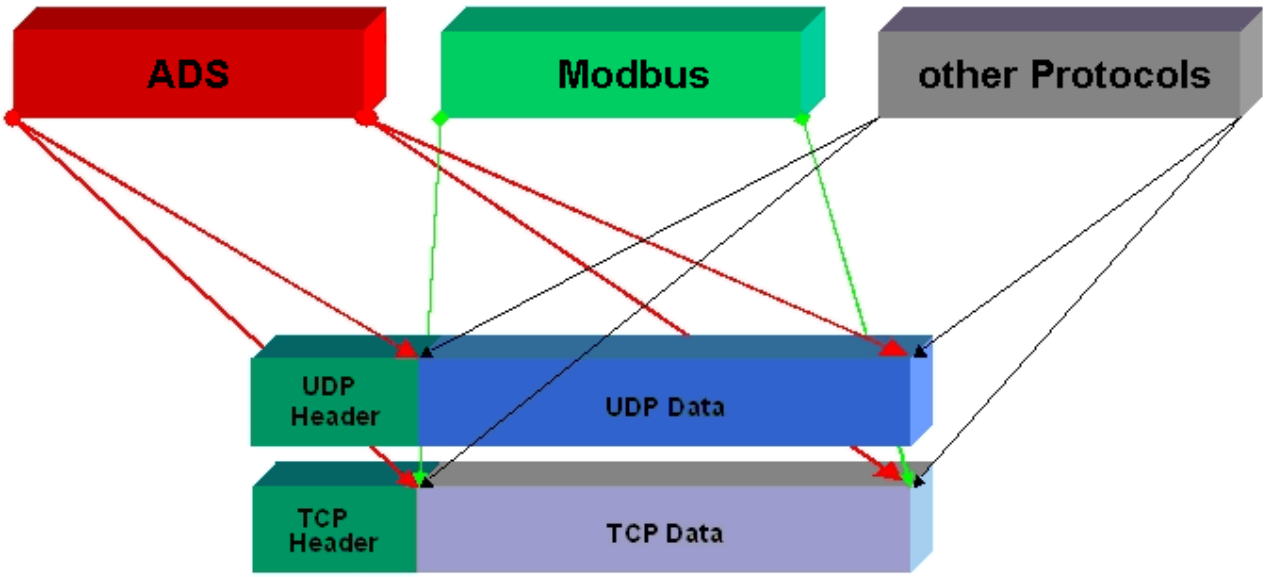

ADS can be used on top of either TCP or UDP, but ModbusTCP is always based on TCP/IP.

8.1.2 Topology example

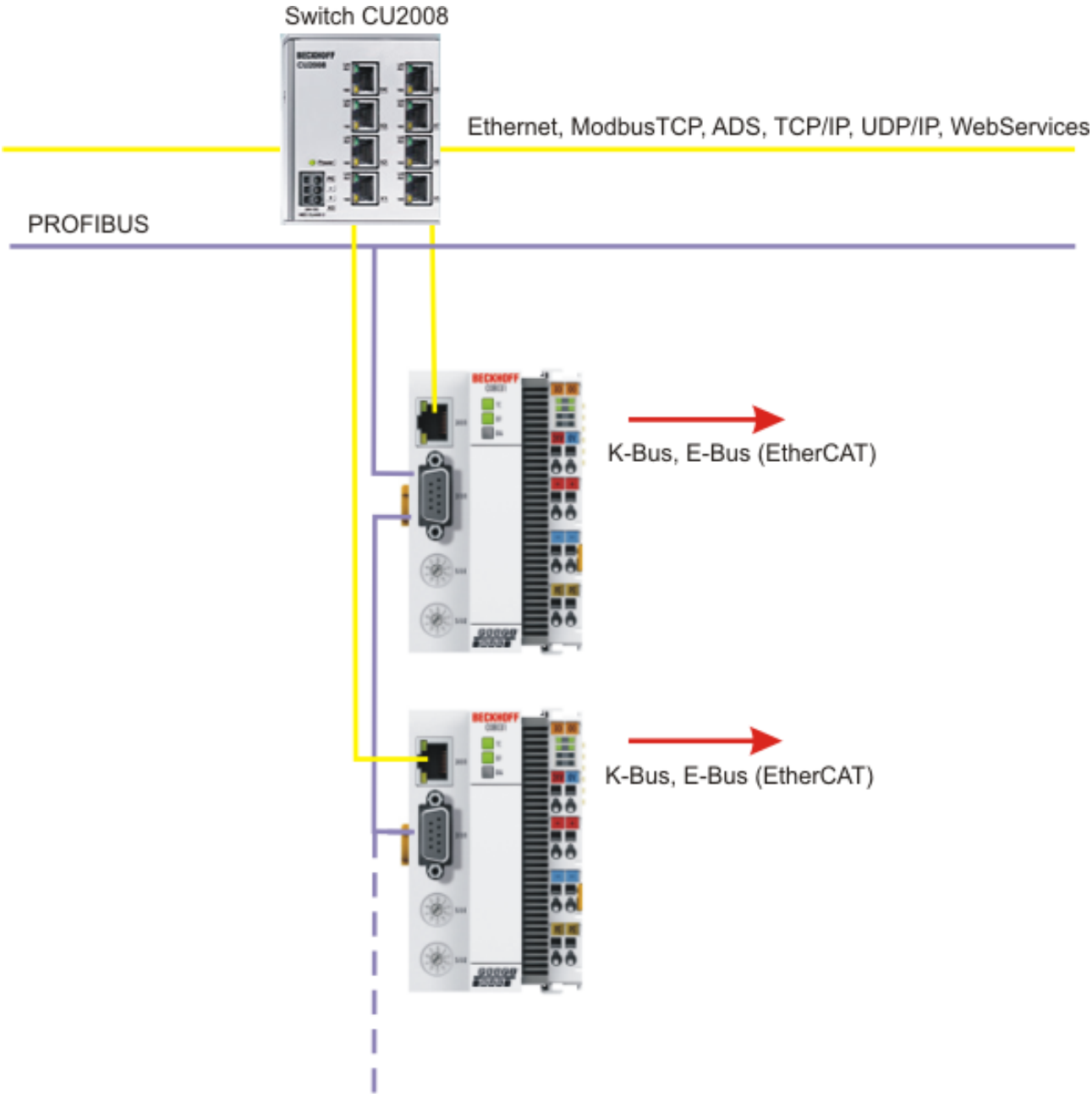

Note	**Observe system load** Observe the system load of your CX8031 when using further Ethernet protocols such as ModbusTCP/UDP or WebServices. A high load can slow down Ethernet communication significantly.

8.2 ADS-Communication

Communication

The ADS protocol (ADS: Automation Device Specification) is a transport layer within the TwinCAT system. It was developed for data exchange between the different software modules, for instance the communication between the NC and the PLC. This protocol enables communication with other tools from any point within the TwinCAT. If communication with other PCs or devices is required, the ADS protocol can use TCP/IP as a basis. Within a networked system it is thus possible to reach all data from any point.

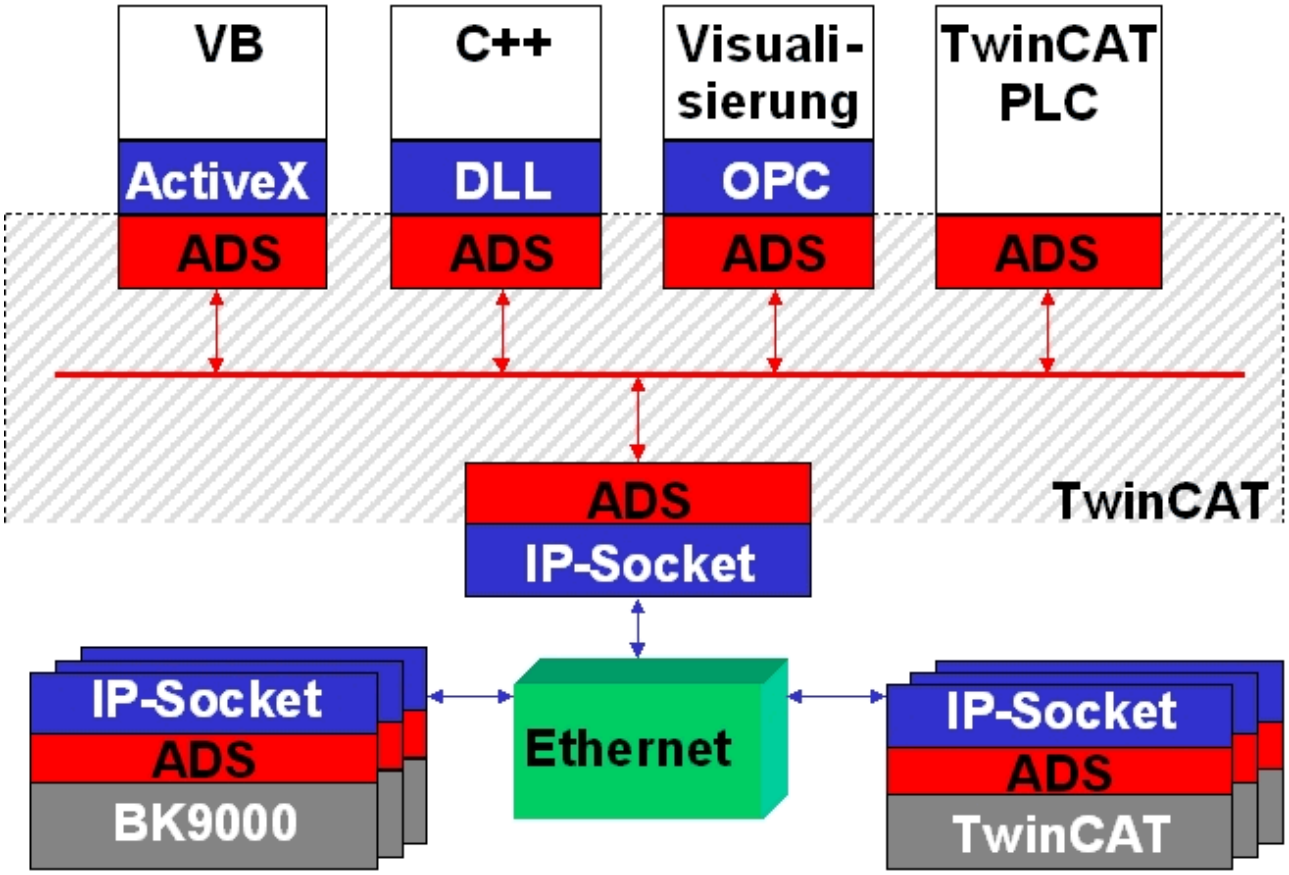

The ADS protocol runs on top of the TCP/IP or UDP/IP protocols. It allows the user within the Beckhoff system to use almost any connecting route to communicate with all the connected devices and to parameterize them. Outside the Beckhoff system a variety of methods are available to exchange data with other software tools.

Software interfaces

ADS-OCX
The ADS-OCX is an Active-X component. It offers a standard interface to, for instance, Visual Basic, Delphi, etc.

ADS-DLL
You can link the ADS-DLL (DLL: Dynamic Link Library) into your C program.

OPC
The OPC interface is a standardized interface for communication used in automation engineering. Beckhoff offer an OPC server for this purpose.

Protocol

The ADS functions provide a method for accessing the Bus Coupler information directly from the PC. ADS function blocks can be used in TwinCAT PLC Control for this. The function blocks are contained in the *PLCSystem.lib* library. It is also equally possible to call the ADS functions from AdsOCX, ADSDLL or OPC.

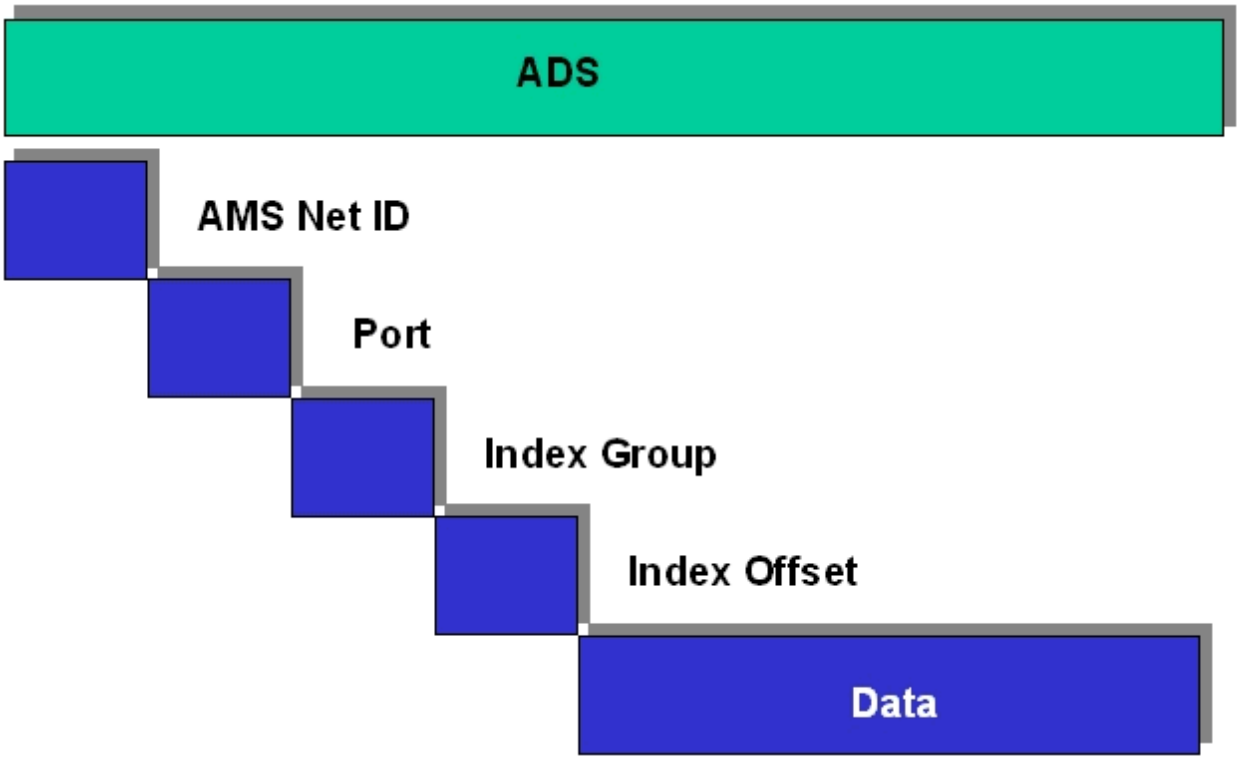

AMSNetID
The AMSNetID provides a reference to the device that is to be addressed. This is taken from the MAC address of the first Ethernet port (X001) and is printed on the side of the CX80xx. For the AMSNetID the bytes 3 to 6 plus ".1.1" are typically used.
Example:
MAC address 00-01-**05-01-02-03**
AMSNetID 5.1.2.3.1.1

Port number
The port number distinguishes sub-elements in the connected device.
Port 801: local process data PLC runtime 1

Index group
The index group distinguishes different data within a port.

Index offset
Indicates the offset, the byte from which reading or writing is to start.

Len
Gives the length of the data, in bytes, that is to be read or written.

TCP port number
The TCP port number for the ADS protocol is 48898 or 0xBF02.

9 PROFIBUS

9.1 System overview PROFIBUS

As a fast, open bus system with line topology and terminators, PROFIBUS is widely used in automation technology. The PROFIBUS DP (Decentralized Periphery) variant for the fast exchange of data at sensor/actuator level is internationally standardized according to IEC 61158, IEC 61784 and EN 50170.

In PROFIBUS DP, central control devices (e.g. Industrial PCs or PLCs) communicate via a fast serial connection with decentralized input and output modules. RS485 is the most frequently used transmission technique, using a screened twisted pair cable. Data is mainly exchanged cyclically, although acyclic services (DP-V1) are available for parameterization and diagnosis.

PROFIBUS DP offers very short system reaction times: at a transmission rate of 12 MB, less than 2 ms are required to transmit 512 bits each of input and output data to 32 devices.

All Beckhoff PROFIBUS devices feature a high-performance protocol implementation and are certified by the PROFIBUS users organization (PNO).

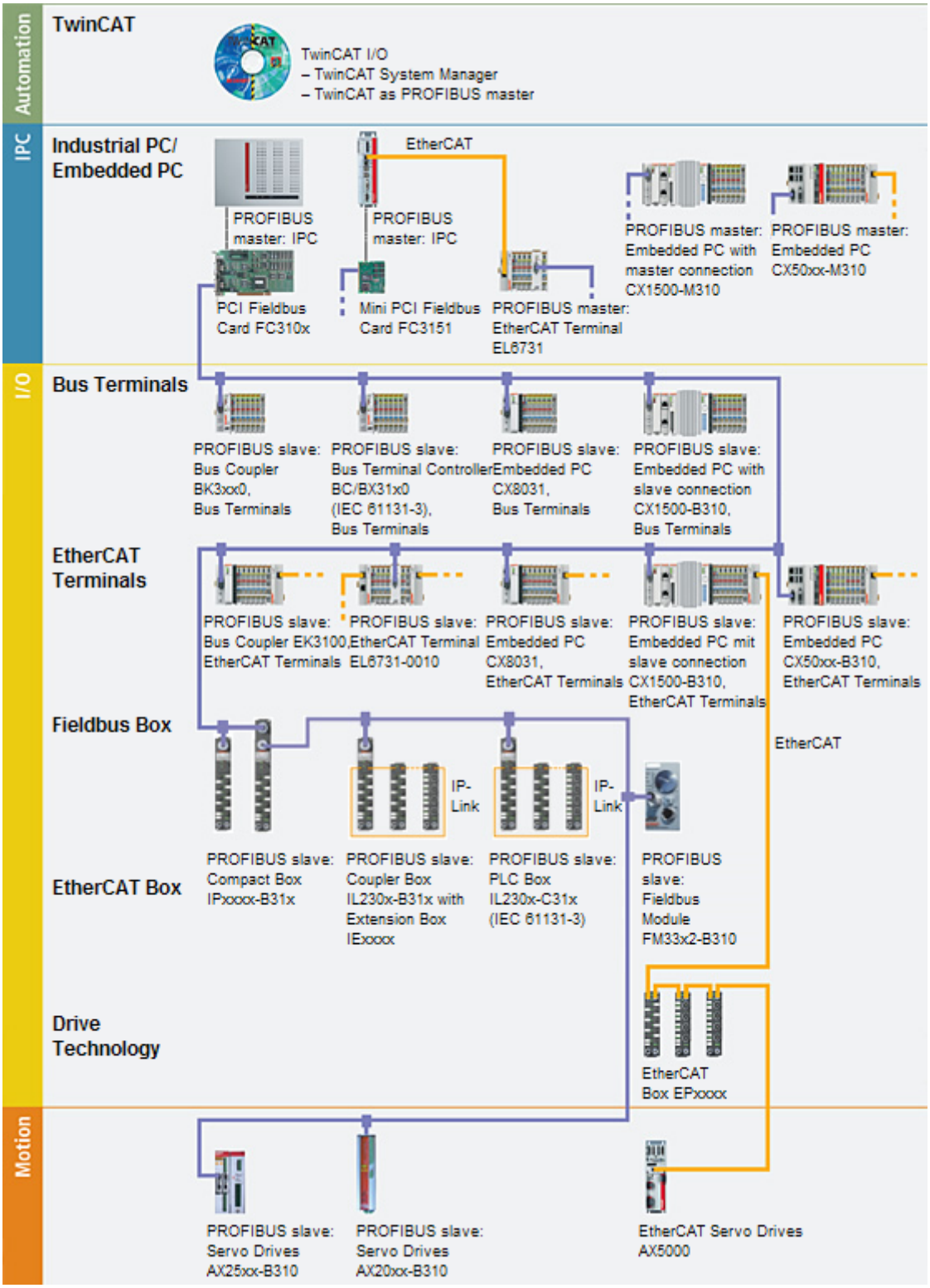
Automation
TwinCAT
TwinCAT I/O
– TwinCAT System Manager
– TwinCAT as PROFIBUS master
IPC
Industrial PC/
Embedded PC
EtherCAT
PROFIBUS
master: IPC
PROFIBUS
master: IPC
PROFIBUS master:
Embedded PC with
master connection
CX1500-M310
PROFIBUS master:
Embedded PC
CX50xx-M310
PCI Fieldbus
Card FC310x
Mini PCI Fieldbus
Card FC3151
PROFIBUS master:
EtherCAT Terminal
EL6731
I/O
Bus Terminals
PROFIBUS slave:
Bus Coupler
BK3xx0,
Bus Terminals
PROFIBUS slave:
Bus Terminal Controller
BC/BX31x0
(IEC 61131-3),
Bus Terminals
PROFIBUS slave:
Embedded PC
CX8031,
Bus Terminals
PROFIBUS slave:
Embedded PC with
slave connection
CX1500-B310,
Bus Terminals
EtherCAT
Terminals
PROFIBUS slave:
Bus Coupler EK3100,
EtherCAT Terminals
PROFIBUS slave:
EtherCAT Terminal
EL6731-0010
PROFIBUS slave:
Embedded PC
CX8031,
EtherCAT Terminals
PROFIBUS slave:
Embedded PC mit
slave connection
CX1500-B310,
EtherCAT Terminals
PROFIBUS slave:
Embedded PC
CX50xx-B310,
EtherCAT Terminals
Fieldbus Box
EtherCAT
IP-
Link
IP-
Link
EtherCAT Box
PROFIBUS slave:
Compact Box
IPxxxx-B31x
PROFIBUS slave:
Coupler Box
IL230x-B31x with
Extension Box
IExxxx
PROFIBUS slave:
PLC Box
IL230x-C31x
(IEC 61131-3)
PROFIBUS
slave:
Fieldbus
Module
FM33x2-B310
Drive
Technology
EtherCAT
Box EPxxxx
Motion
PROFIBUS slave:
Servo Drives
AX25xx-B310
PROFIBUS slave:
Servo Drives
AX20xx-B310
EtherCAT Servo Drives
AX5000

PROFIBUS devices

Embedded PCs	CX8031	Embedded PC with fieldbus interface PROFIBUS slave
	CX50xx-M310	Embedded PC with optional interface PROFIBUS master
	CX50xx-B310	Embedded PC with optional interface PROFIBUS slave
	CX1500-M310	PROFIBUS master interface for Embedded-PCs CX1010, CX1020 and CX1030
	CX1500-B310	PROFIBUS slave interface for Embedded-PCs CX1010, CX1020 and CX1030
EtherCAT Terminals	EL6731	PROFIBUS master
	EL6731-0010	PROFIBUS slave
Bus Coupler	EK3100	PROFIBUS Bus Coupler for EtherCAT Terminals
	BK3010	PROFIBUS Bus Coupler for Bus Terminals
	BK3100	PROFIBUS DP/FMS Bus Coupler for Bus Terminals
	BK3110	PROFIBUS „Economy“ Bus Coupler for Bus Terminals
	BK3120	PROFIBUS „Economy plus“-Bus Coupler for Bus Terminals
	BK3150	PROFIBUS „Compact“ Bus Coupler for Bus Terminals
	BK3500	PROFIBUS Bus Coupler with fiber-optic connector for Bus Terminals
	BK3520	PROFIBUS „Economy plus“ Bus Coupler with fiber-optic connector for Bus Terminals
	LC3100	PROFIBUS „Low Cost“ Bus Coupler for Bus Terminals
Bus Terminal Controller	BC3100	PROFIBUS Bus Terminal Controller
	BC3150	PROFIBUS „Compact“ Bus Terminal Controller
	BX3100	PROFIBUS Bus Terminal Controller
Fieldbus Box	IPxxxx-B31x	PROFIBUS Compact Box
	IL230x-B31x	PROFIBUS Coupler Box
	IL230x-C31x	PROFIBUS PLC Box
Fieldbus Modules	FM33xx-B310	Fieldbus modules with PROFIBUS interface
PC Fieldbus Cards	FC310x	PROFIBUS PCI card
	FC312x	PROFIBUS PCI express card
	FC3151	PROFIBUS mini PCI card
Drive Technology	AX2xxx-B310	Servo drive with PROFIBUS slave

9.2 Fieldbus Overview

PROFIBUS is a manufacturer - independent, open fieldbus standard with a wide range of applications in manufacturing and process automation. Manufacturer-independence and openness are guaranteed by the International standards EN 50170 and EN 50254. PROFIBUS allows devices from different manufacturers to communicate without the need for specially adapted interfaces. PROFIBUS is suitable both for fast, time-critical applications and for complex communication tasks.

PROFIBUS offers communication protocols of different functional levels: DP and FMS. According to the application, RS-485, IEC 1158-2 or optical fiber are available as transmission techniques.

PROFIBUS specifies the technical features of a serial fieldbus system with which distributed digital automation devices can be networked together, from the field level up to the cell level. PROFIBUS is a multi-master system, and therefore permits common operation of a number of automation, engineering or visualization systems with their distributed peripheral devices on one bus.

PROFIBUS distinguishes the following device types:

Master devices determine the data traffic on the bus. A master may transmit messages without having received an external request when it is in possession of the bus access authorization (token). Masters are also referred to as active devices.

Slave devices are peripheral devices such as input/output devices, valves, drives, measuring transducers and the Beckhoff PROFIBUS slaves from the BK3xx0, BC3xx0, IPxxxx-B310, IL230x-B310 and IL230x-C310 series. They do not receive any bus access authorization, so that they are only allowed to acknowledge messages that have been received, or to send messages in response to a request from master. Slaves are referred to as passive devices. They only require a small proportion of the bus protocol, which means that they can be implemented with little effort.

PROFIBUS DP

PROFIBUS DP is designed for efficient data exchange at the field level. The central automation devices such as PLC/PCs or process control systems communicate here over a fast serial link with distributed field devices such as I/O, drives, valves etc.. Data is primarily exchanged with these distributed devices cyclically. The communication functions required for this are specified by the basic DP functions in accordance with EN 50170.

In addition to these basic functions, PROFIBUS DP also offers extended acyclic communication services for such purposes as parameterization and other operations. These are also supported by the Beckhoff PROFIBUS slaves of the IPxxxx-B310, IL230x-B310 and IL230x-C310 series. A central controller (master) cyclically reads the input information from the slaves, and writes the output information cyclically to the slaves. The bus cycle time here should be shorter than the central automation system's program cycle time, which lies around 10 ms in many applications.

A high data throughput is not in itself sufficient for successful use of a bus system. Ease of handling, good diagnostic facilities and secure transmission technology are also of the utmost importance if the user’s demands are to be satisfied. These properties are ideally combined in PROFIBUS DP.

System configuration and device types

PROFIBUS DP allows **single master or multi-master** systems to be implemented. This permits a high level of flexibility in system configuration. A maximum of 126 devices (master or slaves) can be connected to one bus. A station address between 0 and 99 can be chosen for the Beckhoff PROFIBUS slaves from the IPxxxx-B310, IL230x- B310 and IL230x-C310 series. The specifications for the system configuration contain the number of stations, the assignment of the station addresses to the I/O addresses, data consistency of the I/O data and the format of the diagnostics messages and the bus parameters being used. Every PROFIBUS DP system consists of different device types. Three types of device are distinguished:

Type	Description
DP master class 1 (DPM1) e.g. Beckhoff PC master card FC310x	This involves a central controller that exchanges information cyclically with the distributed stations (slaves) in a specified message cycle. Typical devices include, for instance, programmable logic controllers (PLCs) or PCs.
DP master class 2 (DPM2)	Devices of this type are engineering, project design or operating devices. They are used for commissioning, for servicing and diagnosis in order to configure the connected devices, to evaluate measured values and parameters and to interrogate the status of devices.
DP slave e.g. Beckhoff Bus Coupler IPxxxx-B310	A PROFIBUS DP slave is a peripheral device (I/O, drive, measuring transducer etc.) that reads input information and passes output information on to the peripherals. It is also possible to have devices that only handle either input or output information. The quantity of input and output information is device-dependent, and may not exceed 246 bytes of input data and 246 bytes of output data.

In **single master systems** only one master is active on the bus in the operating phase of the bus system. The PLC controller is the central control element. The distributed slaves are coupled to the PLC controller via the transmission medium. The shortest bus cycle time is achieved with this system configuration.

In a **multi-master mode** there is more than one master on the bus. They either form sub-systems that are independent of one another, each consisting of one DPM1 and the associated slaves, or additional project design and diagnostic devices. All the DP masters can read the input and output images of the slaves. Writing the outputs is only possible for one DP master (the one assigned as DPM1 during the project design). Multi-master systems achieve a medium bus cycle time. In time-critical applications, the increase in bus cycle time should be observed by adding a diagnostic tool.

Basic device files (GSD)

In PROFIBUS DP, the performance characteristics of devices are documented by the manufacturers and made available to users in the form of a device data sheet and of a basic device file. The structure, content and coding of these basic device files (GSD) is standardized. They make it easy to plan a project with any PROFIBUS DP slaves using project planning devices from a various manufacturers. The PROFIBUS User Organization (PROFIBUS Nutzer Organization - PNO) archives this information for all manufacturers, and will provide information about the GSD from any manufacturer on request. The GSD files are read by a PROFIBUS master configuration software, and appropriate adjustments are transferred to the PROFIBUS master. Please see the appropriate software manual from the master manufacturer for a description.

The Beckhoff GSD files may be obtained from the internet under www.beckhoff.com.

Diagnostic functions

The extensive diagnostic functions of PROFIBUS DP allow rapid fault localization. Diagnosis of the Beckhoff Bus Coupler is not activated in the default setting of the type file or the GSD file. The diagnostic messages are transmitted over the bus and collated by the master.

They are divided into three levels:

Diagnosis type	Description
Related to the station	Messages relating to the general readiness of a device for operation such as over-temperature or under-voltage
Related to the module	These messages indicate that diagnostic signals are pending within a specific I/O sub range of the device (e.g. an 8 bit output module)
Related to the channel	Here the cause of an error is related to a single input/output bit (channel), such as a short circuit on output 2

The Beckhoff PROFIBUS slaves from the IPxxxx-B310, IL230x-B310 and IL230x-C310 series support the PROFIBUS DP diagnostic functions. Assessment of the diagnostic data by means of the controller depends on the support for the PROFIBUS master. Please refer to the device manuals for the master interfaces for details of how to handle the diagnosis.

Sync and Freeze Mode

In addition to the user data traffic related to the device, which is automatically dealt with by DPM1, a DP master has the option of sending control commands to one DP slave, to a group of them or to all of them at the same time. These control commands are transmitted as multicasts. These control commands can be used to specify the sync and freeze operating modes, in order to synchronize the DP slave. They permit event-controlled synchronization of the DP slaves.

The DP slaves start **sync mode** when they receive a sync control command from the assigned DP master. In this operating mode, the outputs of all the addressed DP slaves are frozen at their current values. In the following user data transmissions, the DP slaves store the output data, but the output states themselves nevertheless remain unchanged. Only when the next sync control command is received from the master the stored output data is switched through to the outputs. Sync operation is ended with an unsync control command.

A freeze control command similarly causes the addressed DP slaves to enter **freeze mode**. In this operating mode the states of the inputs are frozen at their current value. The input data is only updated again when the DP master has sent the next freeze control command to the devices concerned. Freeze operation is ended with an unfreeze command.

System behavior

The system behavior is also standardized in PROFIBUS DP, so that devices can to a large extent be interchanged. It is largely determined by the operating condition of the DPM1. This can either be controlled locally, or over the bus by the project design device.

The following three principal conditions are distinguished:

Operation mode	Description
Stop	There is no data traffic between the DPM1 and the DP slaves. The Bus Coupler only addresses the Bus Terminals once after the power has been switched on (none of the I/O LEDs are lit).
Clear	The DPM1 reads the input information from the DP slaves, and maintains the outputs of the DP slaves in a safe state (depending on the reaction to fieldbus errors, the green I/O LED is lit and the outputs are set).
Operate	The DPM1 is in a data transfer phase. In the course of cyclic data traffic the inputs of the DP slaves are read and the output information is transmitted to the DP slaves (the green I/O LED is lit).

The DPM1 sends its local status at a configurable time interval using a multicast command cyclically to all the DP slaves that have been assigned to it. The reaction that the system has to the occurrence of an error during the DPM1's data transfer phase, such as the failure of a DP slave, is specified in the *Auto-Clear*

operating parameter. If this parameter is set to *True*, then the DPM1 switches the outputs of all the associated DP slaves into a safe state as soon as one DP slave is no longer ready for the transfer of user data. The DPM1 then switches into the Clear state. If the parameter is *False* then the DPM1 remains in the operating state even after a fault, and the user can himself specify the system's reaction.

Data traffic between the DPM1 and the DP slaves

The data traffic between the DPM1 and the DP slaves that have been assigned to it is automatically executed by the DPM1 in a specified, continuously repeated sequence. The user specifies the assignment of a DP slave to the DPM1 when the bus system's project is being planned. Those DP slaves that are included in or excluded from the cyclic user data traffic are also defined.

The data traffic between the DPM1 and the DP slaves is divided into the parameterization, configuration and data transfer phases.

Before a DP slave is included in the data transfer phase, the DPM1 checks, in the parameterization and configuration phase, whether the theoretical configuration that has been planned agrees with the actual configuration of devices. The check requires the device type, the format and length information, as well as the number of inputs and outputs, to be in agreement. The user is thus provided with reliable protection against errors in parameterization. In addition to the transfer of user data, which is automatically carried out by the DPM1, it is possible to send new parameterization data to the DP slaves at the user's request.

Protection mechanisms

In the context of distributed peripherals it is necessary, for reasons of safety and reliability, for the system to be given extremely effective functions to protect against incorrect parameterization or the failure of the transmission mechanisms. PROFIBUS DP uses monitoring mechanisms in the DP Master and in the DP Slaves. They are implemented in the form of time monitors. The monitoring interval is specified in when the DP system project is planned.

Protection mechanisms	Description
At the DP Master	The DPM1 monitors the slave's transfer of user data with the Data_Control_Timer. An individual monitoring timer is used for each assigned slave. The time monitor triggers if a proper transfer of user data does not take place within the monitoring interval. In this case the user is informed. If automatic error reaction is enabled (Auto_Clear = True) then the DPM1 leaves the *Operate* state, switches the outputs of the assigned slaves into a safe state, and then goes into the *Clear* operating mode.
At the DP Slave	The slave uses communication monitoring in order to detect errors of the master or in the transmission segment. If data is not transferred with the assigned master within the communication monitoring interval the slave switches the outputs into the safe state itself. The slave inputs and outputs further require access protection in multi-master systems, to ensure that direct access is only made from the authorized master. The slaves will make an image of the inputs and outputs available to other masters, and this can be read by any other master even if it does not have access authorization.

Ident number

Every DP slave and every DPM1 must have an individual identification number. This is required so that a DP master can identify the types of the connected devices without any significant protocol overhead. The master compares the identification numbers of the connected DP devices with the identification numbers in the project planning data specified by DPM2. The transfer of user data only starts if the correct device types are connected to the bus at the correct station addresses. This provides protection from project planning errors. Manufacturer-specific identification numbers are issued by the PROFIBUS User Organization (PNO). The PNO administers the identification numbers along with the basic device data (GSD).

9.3 PROFIBUS DP

In PROFIBUS DP systems, a master (PLC, PC etc.) usually communicates with a large number of slaves (I/Os, drives etc.). Only the master may here actively access the bus (send telegrams on its own initiative), while a DP slave only sends telegrams when it is requested to do so by a master.

DP StartUp

Before the master and slave can cyclically exchange data, the parameter and configuration data is transmitted from the master to the slaves during the DP StartUp phase. After the parameter and configuration data has been sent, the master interrogates the slave's diagnostic data until the slave indicates that it is ready for data exchange. Depending on the extent of the calculations that the slave must carry out after receiving the parameter and configuration data, it can take up to a few seconds before it is ready for data exchange. For this reason the slave possesses the following states:

Parameter data

The parameter data is sent from the master to the slave in the SetPrmLock request telegram. The SetPrmLock response telegram does not contain any data, and therefore consists of a single byte, the short acknowledgement. The parameter data consists of DP parameters (e.g. the setting of the DP watchdog or checking the IdentNumber (unique to each DP device)), of DPV1-/DPV2 parameters and of application-specific parameters that only have to be transmitted once during the StartUp. If an error is found in the parameter data, this is indicated in the diagnostic data, and the slave either remains in or enters the WAIT-PRM state.

Configuration data

The configuration data is sent from the master to the slave in the ChkCfg request telegram. The ChkCfg response telegram does not contain any data, and therefore consists of a single byte, the short acknowledgement. The configuration data describes the assignment of the DP modules to the cyclic I/O data that is to be exchanged between the master and slave via the Data_Exchange telegram in the cyclic data exchange phase. The sequence of the DP modules added to a slave in the DP configuration tool determines the sequence of the associated I/O data in the Data_Exchange telegram.

Diagnostic data

The diagnostic data is requested by the master using a SlaveDiag request telegram without any data. The slave replies with the diagnostic data in a SlaveDiag response telegram. The diagnostic data consists of the standard DP diagnostics (e.g. the state of the slave, the IdentNumber) and of application-specific diagnostic data.

Cyclic data exchange

The heart of the PROFIBUS DP protocol is cyclic data exchange, during which the master carries out an exchange of I/O data with every slave during a PROFIBUS DP cycle. This involves the master sending the outputs to each slave with a DataExchange request telegram, while the slave replies with the inputs in a DataExchange response telegram. This means that all the output and/or input data is transmitted in one telegram, in which the DP configuration (the sequence of DP modules) specifies the assignment of the output and/or input data to the slave's actual process data.

Diagnosis during cyclic data exchange

A slave can send a diagnostics signal to the master during cyclic data exchange. In this case, the slave sets a flag in the DataExchange response telegram, whereby the master recognises that there is new diagnostic data in the slave. It then fetches that data in the SlaveDiag telegram. This means that diagnostic data is not transmitted to the controller with the cyclic I/O data in real-time, but is always at least one DP cycle later.

Synchronisation with Sync and Freeze

The Sync and Freeze commands in the GlobalControl request telegram (broadcast telegram) allow the master to synchronise the activation of the outputs (Sync) or the reading of the inputs (Freeze) in a number of slaves. When the Sync command is used, the slaves are first switched into Sync mode (a process that is

acknowledged in the diagnostic data). The I/O data is then exchanged sequentially with the slaves in the DataExchange telegram. Transmitting the Sync command in the GlobalControl telegram then has the effect of causing the slaves to generate the most recently received outputs. In Freeze operation a Freeze command is first sent in the GlobalControl telegram, in response to which all the slaves latch their inputs. These are then fetched sequentially by the master in the DataExchange telegram.

States in the master

The master distinguishes between the CLEAR state (all outputs are set to the Fail_Safe value) and the OPERATE state (all outputs have the process value). The Master is usually switched into the CLEAR mode when, for instance, the PLC enters STOP.

Class 1 and Class 2 DP Masters

The Class 1 master refers to the controller that carries out cyclic I/O data exchange with the slaves, while a Class 2 master is a B&B device that generally only has read access to the slaves' I/O data.

9.4 PROFIBUS DPV1

PROFIBUS DPV1 refers primarily to the acyclic read and write telegrams, with which data sets in the slave are acyclically accessed. A distinction between a Class 1 and a Class 2 master is also made for DPV1. The difference between acyclic Class 1 (C1) and Class 2 (C2) connections is that the acyclic C1 connection is established during the DP StartUp phase of cyclic DP operation. Once the slave has reached the WAIT-CFG state it is possible for acyclic DPV1-C1 read and write telegrams to be sent from the master to the slave, whereas the C2 connection is established separately, independently of the cyclic DP connection. This is usually carried out by a second (C2) master so that, for instance, a manufacturer-specific project configuration and diagnostic tool can access the slave's data.

When two masters are used, however, is must always be borne in mind that these share bus access (a token is exchanged), so that time relationships are less favourable than in the case of a single master system.

9.5 Cables, Plugs and Switches

The physics of the transmission

Physical aspects of the data transmission are defined in the PROFIBUS standard. See PROFIBUS layer 1 (physical layer).

The types of area where a fieldbus system can be used is largely determined by the choice of the transmission medium and the physical bus interface. In addition to the requirements for transmission security, the expense and work involved in acquiring and installing the bus cable is of crucial significance. The PROFIBUS standard therefore allows for a variety of implementations of the transmission technology while retaining a uniform bus protocol.

Cable-based transmission: This version, which accords with the American EIA RS-485 standard, was specified as a basic version for applications in production engineering, building management and drive technology. A twisted copper cable with one pair of conductors is used. Depending on the intended application area (EMC aspects should be considered) the screening may be omitted.

Two types of conductor are available, with differing maximum conductor lengths; see the „RS-485“ table. The pin assignment at the plug and the wiring are illustrated in the diagram. Note the special requirements on the data cable for baud rates greater than 1.5 Mbaud. The correct cable is a basic requirement for correct operation of the bus system. If a „simple“ 1.5 Mbaud cable is used, reflections and excessive attenuation can lead to some surprising phenomena. This could, for example be that some station is not connected, but when the neighboring station is unplugged the connection appears again. Or there may be transmission errors when a specific bit pattern is transmitted. The result of this can be that when the equipment is not operating, PROFIBUS works without faults, but that there are apparently random bus errors after start-up. Reducing the baud rate (< 93.75 kbaud) corrects this faulty behavior.

Cable-related malfunctions

If reducing the baud rate does not correct the error, then in many cases this can indicate a wiring fault. The two data lines maybe crossed over at one or more connectors, the termination resistors may not be switched on, or they may be active at the wrong locations.

Note	**Pre-assembled cables from Beckhoff** Installation is made a great deal more straightforward if pre-assembled cables from Beckhoff are used. Wiring errors are avoided, and commissioning is more rapidly completed. The range includes fieldbus cables, power supply cables, sensor cables and accessories such as terminating resistors and T-pieces. Connectors and cables for field assembly are nevertheless also available.

PROFIBUS Connection of the fieldbus box modules

The M12 socket is inverse coded, and has five pins. Pin 1 is 5 V DC and 3 is GND for the active termination resistor. These must never be misused for other functions, as this can lead to destruction of the device. Pin 2 and pin 4 are the PROFIBUS signals. These must never be swapped over, as this will prevent communication. Pin 5 is the shield, and this is capacitatively coupled to the Fieldbus Box chassis.

PROFIBUS socket pin assignment

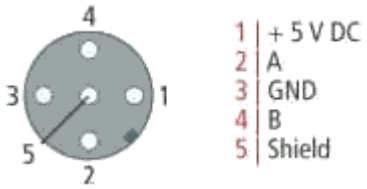

Table 4: PROFIBUS conductor colors

PROFIBUS conductors	M12	D-Sub
B red	Pin 4	Pin 3
A green	Pin 2	Pin 8

Table 5: RS485 - Fundamental properties

RS-485 transmission according to the PROFIBUS standard	
Network topology	Linear bus, active bus terminator at both ends, stubs are possible.
Medium	Screened twisted cable, screening may be omitted, depending upon the environmental conditions (EMC).
Number of stations	32 stations in each segment with no repeater. Can be extended to 127 stations with repeater
Max. bus length without repeater	100 m at 12 Mbit/s 200 m at 1500 Kbit/s, up to 1.2 km at 93.75 Kbit/s
Max. bus length with repeater	Line amplifiers, or repeaters, can increase the bus length to the order of 10 km. The number of repeaters possible is at least 3, and, depending on the manufacturer, may be up to 10
Transmission speed	9.6, 19.2, 93.75, 187.5, 500, 1500 Kbit/s, up to 12 Mbit/s, adjustable in stages
Plug connector	9-pin D-Sub connector for IP20 M12 round plugged connector for IP65/67

Cabling for PROFIBUS DP and PROFIBUS FMS

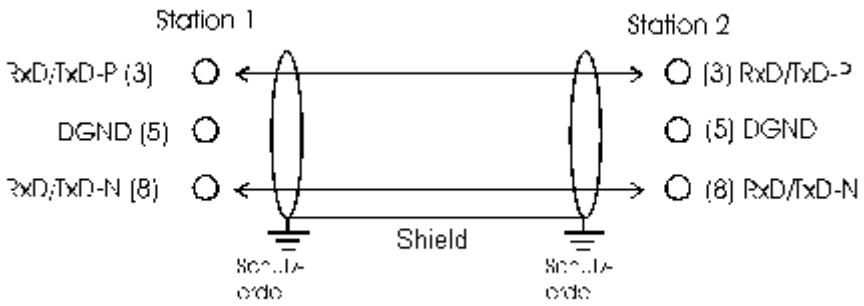

Note	**Termination resistors at the conductor ends** In systems with more than two stations all devices are wired in parallel. It is essential that the bus cables are terminated with resistors at the conductor ends in order to avoid reflections and associated transmission problems.

Addressing

Setting of station addresses

The PROFIBUS address must be set using the two rotary selection switches behind the transparent cover. The default setting is 11. Any address is permitted, but each address may only be used once within the network. The address is changed while the Fieldbus Box is switched off. To do this, unscrew the cover and use a screwdriver to move the switches to the desired position. Make sure that the switches engage properly. The change in address is active as soon as the device is switched on.

Address Fieldbus Box

The switch on the left represents the tens, while that on the right represents the units.

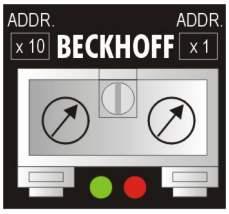

Address Bus Coupler

The switch S311 represents the tens, while that S310 represents the units.

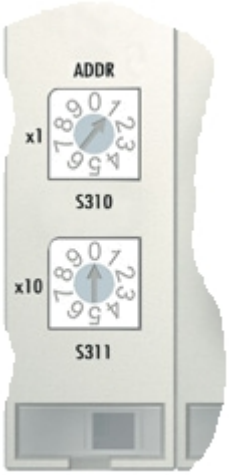

9.6 Topology

- A bus segment may consist of a maximum of 32 devices (including the repeaters).
- The maximum conductor length of a segment depends on the transmission speed in use and on the quality of the bus cables being used.
- No more than 9 repeaters may be installed between two devices.
- Stubs are to be avoided, and are not permitted above 1.5 Mbaud.
- The maximum number of devices is 127
- Interrupting the supply voltage from cable ends by switching off the repeater/slave, or by pulling out the plug, is not permitted.

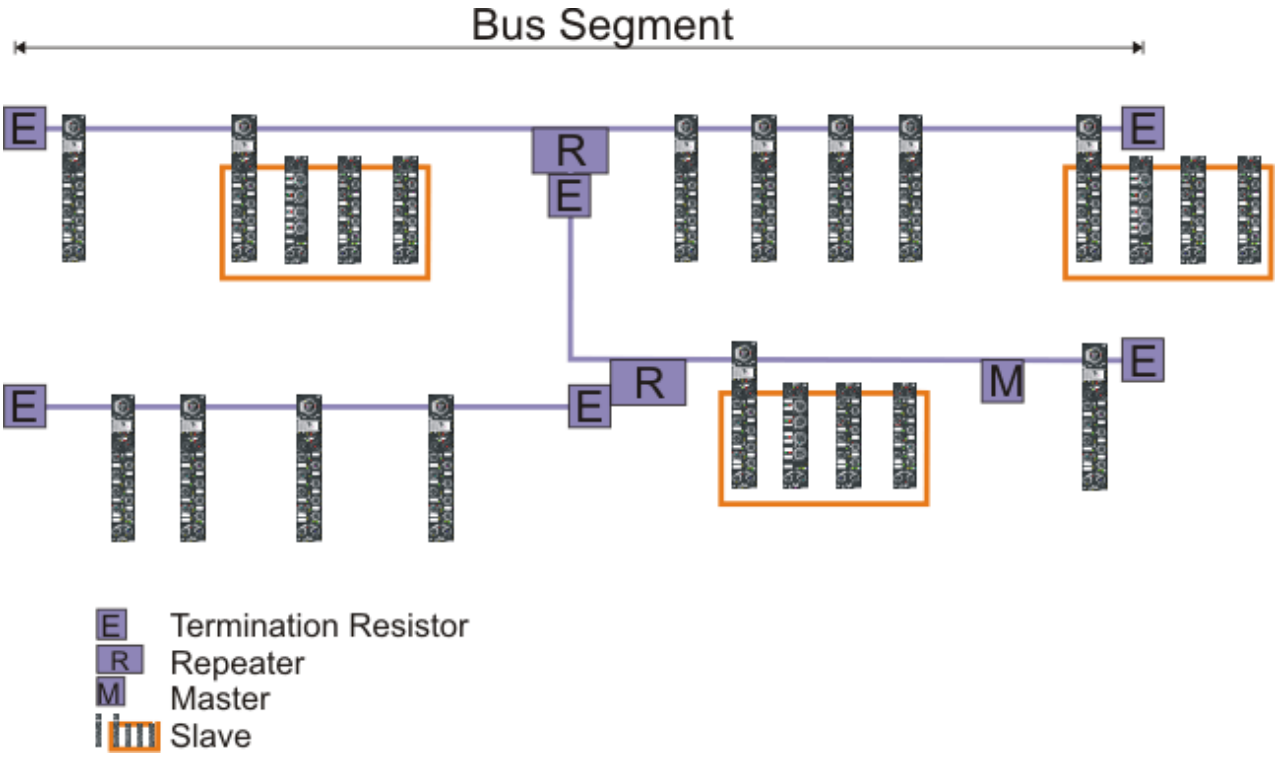

Fig. 1: RS485 topology with 3 segments and 2 repeaters.

10 Error handling and diagnosis

10.1 LED indicators

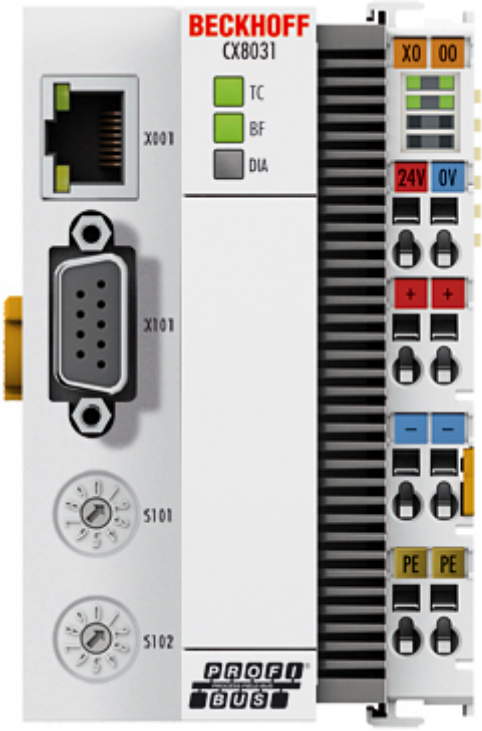

Ethernet interface X001

Interface X001	Ethernet (CX8030, CX8031)	Meaning
LED green	on	Link present
LED yellow	flashing	Activity

LED CX8030 Coupler

Labeling	Meaning	Color	Meaning
TC	Indicates the status of the coupler	red	TwinCAT is in "stop" mode
		Green	TwinCAT is in "run" mode
		Blue (If red DIP switch 1 is set to on when starting the coupler)	TwinCAT is in "config" mode
BF	Indicates the status of the PROFIBUS	Green on	PROFIBUS error-free
		Green flashing	PROFIBUS, at least one slave in error
DIA	Indicates PROFIBUS errors	red illuminated	no PROFIBUS configured

LED CX8031 and CX8030 Couplers configured as slave

Labeling	Meaning	Color	Meaning
TC	Indicates the status of the coupler	red	TwinCAT is in "stop" mode
		Green	TwinCAT is in "run" mode
		Blue (If red DIP switch 1 is set to on when starting the coupler)	TwinCAT is in "config" mode
BF	Indicates the status of the PROFIBUS	Green on	PROFIBUS in data exchange
		Green flashing	PROFIBUS is waiting for Cfg data
DIA	Indicates PROFIBUS errors	-	-

LED power supply terminal

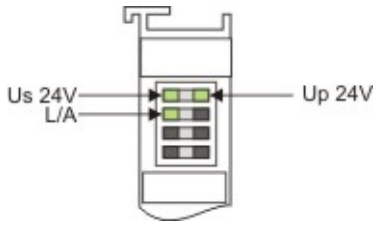

Operation with K-bus terminals

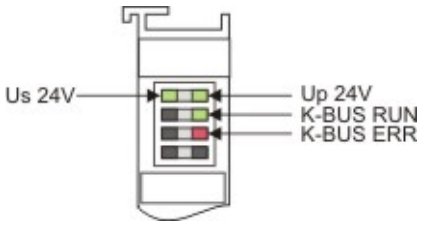

Operation with E-bus terminals

Display LED	Description	Meaning
1 Us 24 V (top left, 1st row)	CX80xx supply voltage	connected to -24 V
2 Up 24 V (top right, 1st row)	Power contacts supply voltage	connected to -24 V
3 L/A (left center, 2nd row)	EtherCAT LED	flashing green: EtherCAT communication active connected to E-bus / no data traffic not connected to E-bus
4 K-BUS RUN (right center, 2nd row)	K-bus LED RUN	Lights up green: K-bus running, everything OK
6 K-BUS ERR (bottom right, 3rd row)	K-bus LED ERR	Lights up red: K-bus error - see K-bus error code

K-bus error code

Error code	Error code argument	Description	Remedy
Persistent, continuous flashing		EMC problems	• Check power supply for undervoltage or overvoltage peaks • Implement EMC measures • If a K-bus error is present, it can be localized by a restart of the coupler (by switching it off and then on again)
3 pulses	0	K-bus command error	• No Bus Terminal inserted • One of the Bus Terminals is defective; halve the number of Bus Terminals attached and check whether the error is still present with the remaining Bus Terminals. Repeat until the defective Bus Terminal is located.
4 pulses	0	K-Bus data error, break behind the Bus Coupler	Check whether the n+1 Bus Terminal is correctly connected; replace if necessary.
	n	Break behind Bus Terminal n	Check whether the bus end terminal 9010 is connected.
5 pulses	n	K-bus error in register communication with Bus Terminal n	Exchange the nth bus terminal
6 pulses	0	Error at initialization	Exchange Bus Coupler
	1	Internal data error	Perform a hardware reset on the Bus Coupler (switch off and on again)
	8	Internal data error	Perform a hardware reset on the Bus Coupler (switch off and on again)
7 pulses	0	Process data lengths do not correspond to the configuration	Check the Bus Terminals for the configured Bus Terminals
	1..n	K-bus reset failed	Check the Bus Terminals

11 Appendix

11.1 First steps

The following components are necessary for the first steps

- PC with TwinCAT 2.11 R3
- Ethernet cable
- Power supply (24 V_{DC}), cabling material
- a KL2xxx or an EL2xxx, digital output terminal, end terminal

Note	**Required TwinCAT version** TwinCAT 2.11 R3 is required for the programming of the CX80xx series. Older TwinCAT versions and TwinCAT 3.x are not supported!

1. Connect K-bus or E-bus terminals to the controller.

2. Connect voltage to the CX80xx (see power supply [▶ 23]).

3. Connect Ethernet (CX80xx X001) to your network or a direct connection to your PC (make sure in the case of a peer-to-peer connection that the IP addressing in your PC is set to DHCP).

4. Wait a while, approx. 1 to 2 minutes; either the CX80xx will be assigned an address by the DHCP server (usually fast) or, if it does not find a DHCP server, it uses a local IP address.

5. Switch on TC on the PC in Config Mode (TwinCAT icon blue) and start the System Manager

6. In the System Manager, click on the PC symbol (Choose Target System) or press >F8<

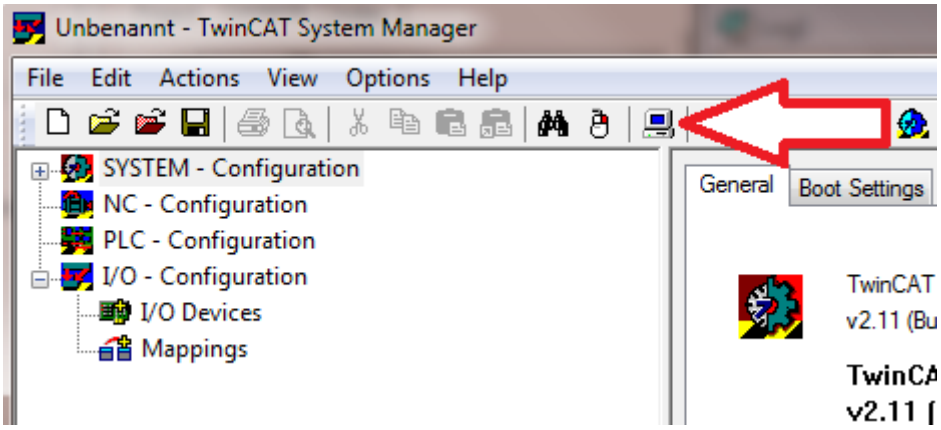

7. The following dialog box opens; click on Search (Ethernet).

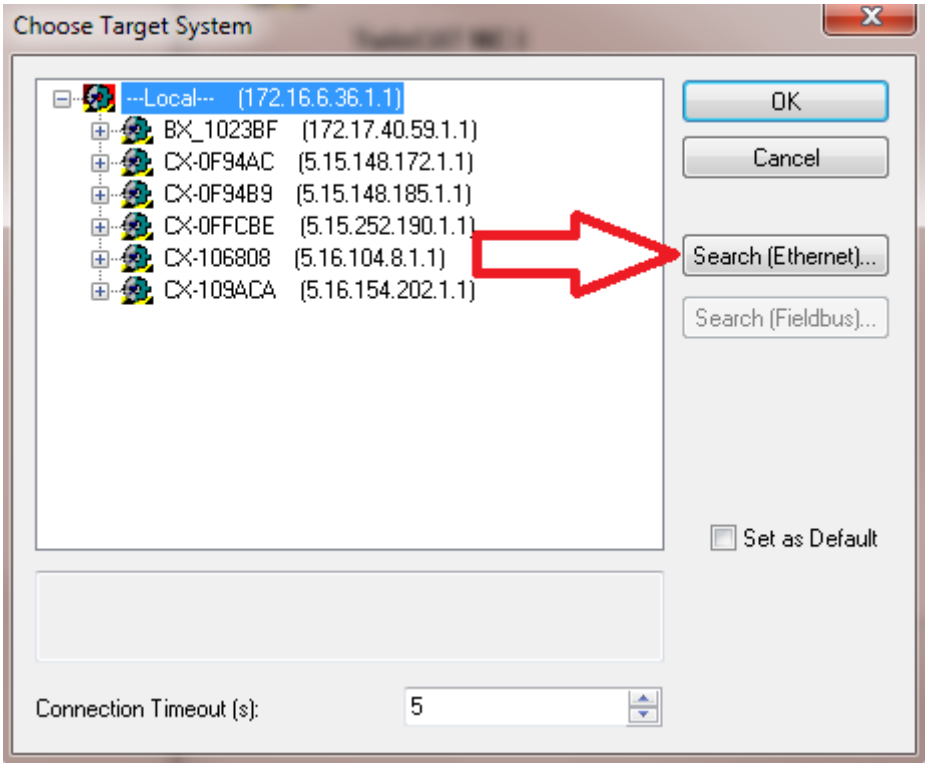

8. Select Option 1 if you have addressed via DHCP or Option 2 in case of DHCP or local IP address. Then click on "Broadcast search".

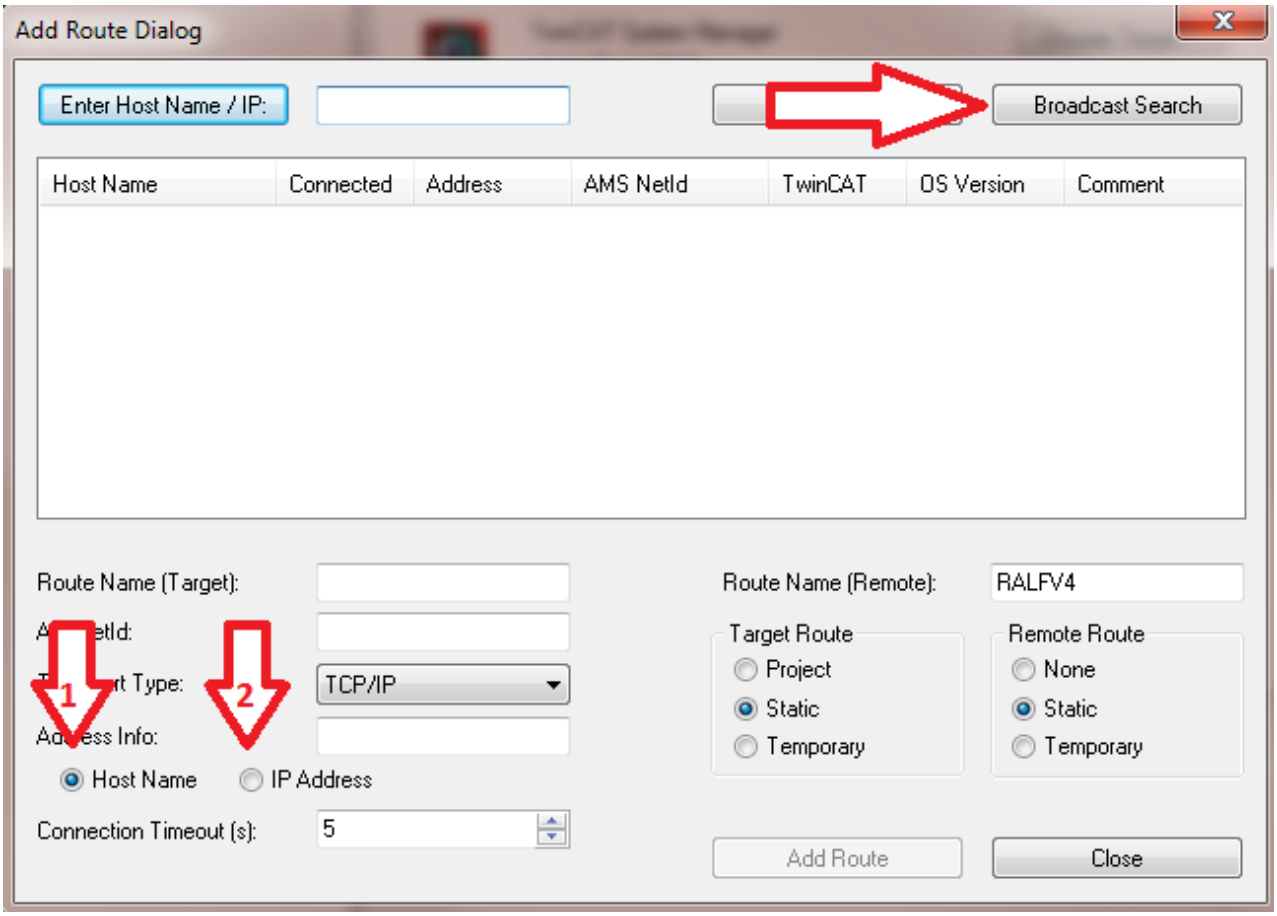

Your network is scanned for Beckhoff controllers. If none is found, this means that the DHCP of the controller is not yet completed or the network settings on your PC are incorrect. A network cable that has not been connected can naturally also be the cause, but this should not be the case if point 3 has been done.

9. The host name is composed by default of "CX" and the last 3 bytes of the MAC address. You can find the MAC address on the side of the CX80xx. The MAC address is always 6 bytes long and the first three bytes are the vendor ID, which is always 00 01 05 in the case of Beckhoff devices.

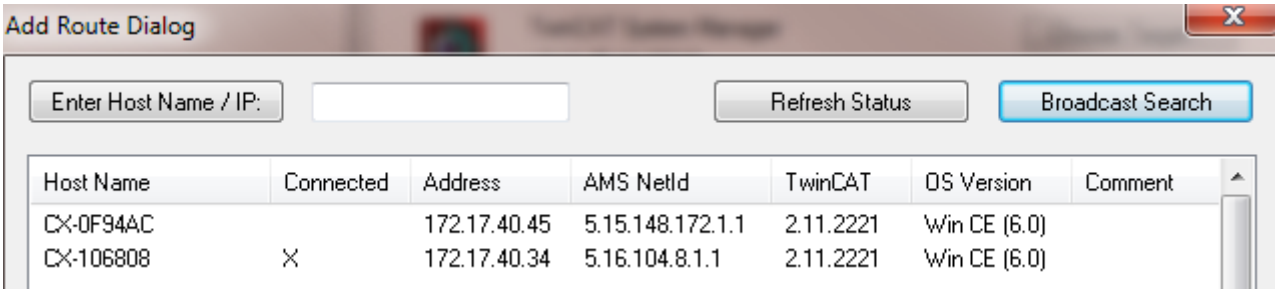

An "X" next to *Connected* means that the CX is already known in the system and can be used. To make it known, click in the list on the CX with which you want to connect and then click on "Add route". An input mask opens with "User name" and "Password". By default there is no password, simply confirm by clicking on OK. Afterwards the "X" should appear next to *connected*.

10. Next, the CX should appear in the list of the devices; select it and confirm by clicking on OK.

11. Check whether the connection is there. In the System Manager in the bottom right-hand corner. It must be blue or green and may **not** be yellow.

12. If the setting is green, switch the CX to Config Mode with "Shift F4" or click on the blue TC icon in the System Manager. The System Manager now asks you whether you really want to switch to Config Mode; confirm by clicking on OK.

13. The setting at the bottom right must now change to blue and the TC LED on the CX80xx must now also light up blue.

14. Now click on I/O Devices and then on Scan Devices...

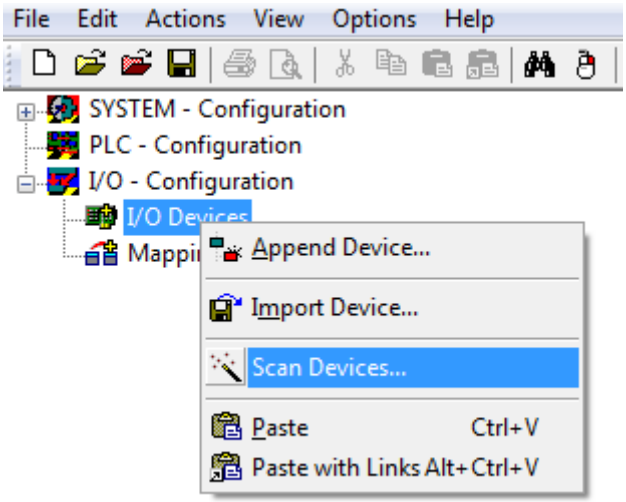

15. A message appears, informing you that not everything will be automatically detected.

16. The CCAT interface is usually found (CX8090) or the corresponding fieldbus interface (other CX80xx devices) and either a K-bus interface or an EtherCAT interface, depending now on which terminals you have connected to the CX. The CCAT interface must be present in the System Manager file and may not be deleted. If an error message should appear when scanning, check the revision level of your TwinCAT version and perform an update if necessary.

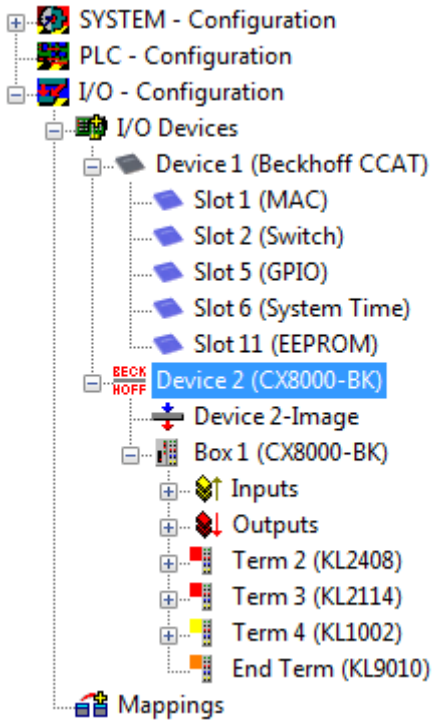

17. Now we come to the programming. To do this, open the PLC Control and select File -> New. The PLC Control asks you for the target system. Select CX (ARM). Afterwards it asks you for the function block; set the ST language (structured text). Now write a small program...

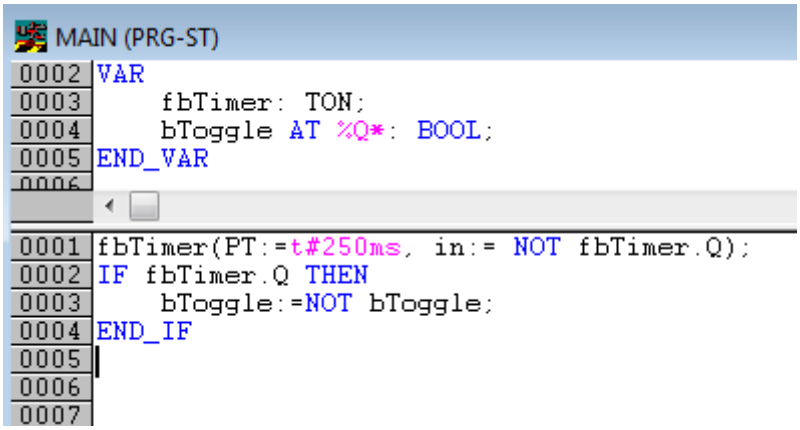

Translate the program. If it is error free (a warning must come, that it is OK) save the project under an arbitrary name, translate it again and save it once **again**.

18: Switch once again to the System Manager and add the program under PLC - Configuration. A FileName.typ file is sought.

19: Now open the project, then the task and then outputs, in which there must be a variable MAIN.bToggle. You can link this with the hardware. To do this, click on "Linked to...".

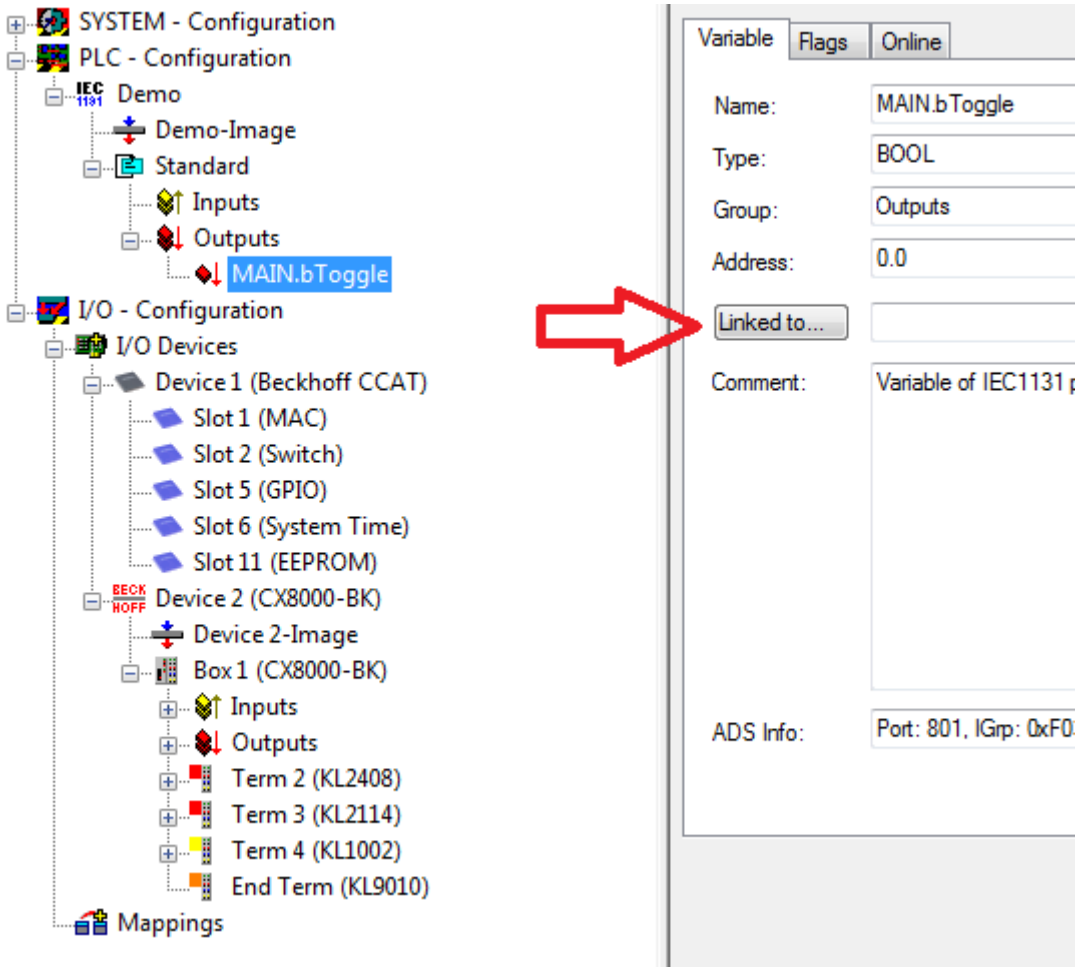

Select a digital output. Now you can download the configuration to the CX and switch the CX to Run Mode. To do this, click on the ‘cube’ or press Ctrl + Shift + F4. The TC LED on the CX must then light up green.

20. Switch back to PLC Control, go to "Online/Selection of the target system", select the correct CX, click on it and select runtime system 1. Now "Online/login" again (F11) transfer the PLC program, then "Online/ Start" (F5). The LED on your terminal must now flash.

21. As a final step Online/Generate a boot project. This completes the project and your first program is stored on the CX.

Congratulations, the foundations have now been laid and are ready to be built on. We wish you every success!

11.2 Image Update

There are two different possibilities to update the image of the CX80xx.

Note	**Prerequisites** • Please make sure before the update that your CX80xx supports the image that you want to load. • When updating the image, please first update all existing files and only then copy the new image.

Always copy all files and directories in order to update a CX80xx.

Licenses	30.07.2012 13:40	Dateiordner	
RegFiles	30.07.2012 13:40	Dateiordner	
System	30.07.2012 13:40	Dateiordner	
TwinCAT	30.07.2012 13:40	Dateiordner	
UPnP	30.07.2012 13:40	Dateiordner	
www	30.07.2012 13:40	Dateiordner	
CX8000_CE600_LF_v351b_TC211R3_B2226	24.11.2011 13:50	Datei	0 KB
NK.bin	30.07.2012 12:39	VLC media file (.bi...	13.477 KB

Update via USB

CAUTION	**USB port as ignition source in potentially explosive atmospheres** Gases or dusts can be ignited by a spark discharge when the USB port is used. Switch off the power supply and wait until the 1-second UPS has discharged. Ensure that there is no explosive atmosphere before you use the USB port.

A USB cable is required for this!

- Switch off the CX80xx

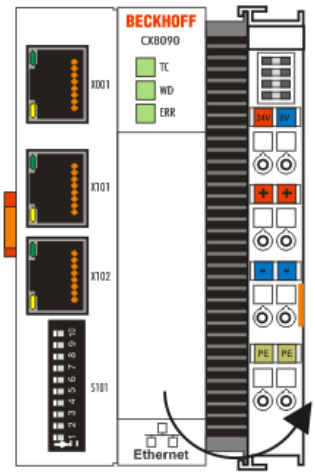

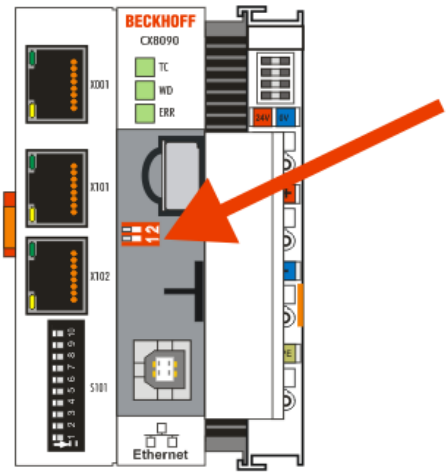

- Set red Dip switch (under the flap) DIP 1 to ON
- Switch on the CX
- Connect the PC with USB
- Delete all files (we recommend that you backup all files first), no formatting

- Wait until copying has finished, then remove the USB cable
- Switch DIP switch 1 to OFF
- Switch off the CX80xx
- Switch on the CX80xx; it may take a little longer the first time

Update the MicroSD card

A MicroSD card reader is required for this!

- Remove the MicroSD card from the switched-off CX device.
- Insert the MicroSD card into the reader
- Delete all files (we recommend that you backup all files first), no formatting
- Load the new image
- Wait until copying has finished, then remove the MicroSD card
- Insert the MicroSD card into the SD slot of the switched-off CX again
- Now switch on the CX again; it may take a little longer the first time

11.3 Certification

11.3.1 Ex

The CX8xxx Embedded PCs, which are certified for use in potentially explosive atmospheres, have the following IDs:

II 3 G Ex nA IIC T4 Gc

II 3 D Ex tc IIIC T135 ºC Dc

DEKRA 16ATEX0052 X
Ta: 0°C-55°C

Serial number

The name plate of the CX8xxx Embedded PCs shows a consecutive serial number, a hardware version and a date of manufacture:

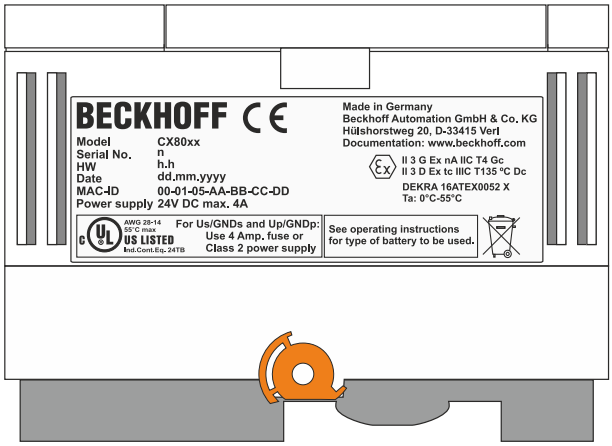

Legend:

n:	Serial number, consecutive number
h:	Hardware version, ascending number
dd:	Production day
mm:	Production month
yyyy:	Production year

11.3.2 FCC

FCC Approvals for the United States of America

FCC: Federal Communications Commission Radio Frequency Interference Statement

This equipment has been tested and found to comply with the limits for a Class A digital device, pursuant to Part 15 of the FCC Rules. These limits are designed to provide reasonable protection against harmful interference when the equipment is operated in a commercial environment. This equipment generates, uses, and can radiate radio frequency energy and, if not installed and used in accordance with the instruction manual, may cause harmful interference to radio communications. Operation of this equipment in a residential area is likely to cause harmful interference in which case the user will be required to correct the interference at his own expense.

FCC Approval for Canada

FCC: Canadian Notice

This equipment does not exceed the Class A limits for radiated emissions as described in the Radio Interference Regulations of the Canadian Department of Communications.

11.3.3 UL

The UL-certified CX8xxx Embedded PCs have the following IDs:

Compliance with UL requirements:

Compliance with the following UL requirements is required, in order to guarantee the UL certification for the CX8xxx Embedded PC:

- The Embedded PCs must not be connected to unlimited voltage sources.
- Embedded PCs may only be supplied from a 24 V DV voltage source. The voltage source must be insulated and protected with a fuse of maximum 4 A (corresponding to UL248).
- Or the power supply must originate from a voltage source that corresponds to NEC class 2. An NEC class 2 voltage source must not be connected in series or parallel with another NEC class 2 voltage source.

11.4 Bibliography

German books

PROFIBUS

- PROFIBUS-DP/DPV1
  Grundlagen, Tipps und Tricks für Anwender (Principles, Tips for Users)
  by Manfred Popp
  ISBN: 3778527819

General fieldbus technology

- Gerhard Gruhler (Pub.): **Feldbusse und Geräte-Kommunikationssysteme** (Fieldbus and Device Communication Systems)
  Praktisches Know-How mit Vergleichsmöglichkeiten (Practical Know-how with Comparative Resources)
  Franzis Verlag, 2001
  244 pages
  ISBN 3-7723-5745-8

English books

(in preparation)

PROFIBUS-DP standards

- IEC 61158 and IEC 61784
- DIN 19245, Part 3
- Euronorm EN 50 170

Web sites

- http://www.profibus.com

11.5 List of Abbreviations

DP

Distributed Peripherals. PROFIBUS protocol for fast cyclic data exchange

FMS

Fieldbus Message Specification. The PROFIBUS transmission protocol

Freeze mode

This command makes the slave freeze its inputs

GSD file

Basic device file (in German)

GSE file

Basic device file (in English)

IP20, IP65, IP66, IP67

Protection class (contact, water, dust)

K-Bus

Terminal bus - internal bus for communication between the coupler and Bus Terminals

PNO

PROFIBUS User Organisation

Repeater

Provides signal conditioning, connecting individual bus segments

PLC

Programmable logic controller

Sync mode

This command makes the slave hold its outputs unchanged until it receives the Sync telegram.

11.6 Support and Service

Beckhoff and their partners around the world offer comprehensive support and service, making available fast and competent assistance with all questions related to Beckhoff products and system solutions.

Beckhoff's branch offices and representatives

Please contact your Beckhoff branch office or representative for local support and service on Beckhoff products!

The addresses of Beckhoff's branch offices and representatives round the world can be found on her internet pages:
http://www.beckhoff.com

You will also find further documentation for Beckhoff components there.

Castel Maggiore (BO) 40013
Via Lirone 60/i

e-mail: info@eurotecsrl.com
Tel: +39 051/6321595
Website: www.eurotecsrl.com

C.F.: 04103780377
P.I.: 01596581205