EUROTEC
TECNOLOGIE IMPIANTISTICHE - AUTOMAZIONE - TELECONTROLLO

LUMEL
EVERYTHING COUNTS

POWER CONTROLLER
RPL1

USER'S MANUAL

CE

CONTENTS

1. APPLICATION.....5
2. BASIC REQUIREMEMNTS, OPERATIONAL SAFETY 5
3. POWER CONTROLLER SET.....6
4. INSTALLATION.....6
4.1. Overall and assembly dimensions 6
4.2. Electrical connections 8
4.3. Choice of the control type 8
4.4. Connection of control signals.....9
4.5. Connection of supply and load.....11
5. DESCRIPTION OF CONTROL TYPES 14
5.1. Control of ON-OFF type.....14
5.2. Pulse control 15
5.3. Phase control 16
5.4. Control of the input line amplification 17
5.5. Limitation of the load current.....17
5.6. Overload protection.....17
5.7. Soft-Start function 17
5.8. Signalling of maximal radiator temperature exceeding 17
6. CONTROLLER OPERATION 18
7. TECHNICAL DATA 19
7.1. Electrical parameters of the high-current circuit.....19
7.2. Electrical parameters of the supply and control circuit.....20
7.3. Other parameters.....20
7.4. Safety requirements.....20
7.5. Electromagnetic compatibility 21
8. ORDERING CODES 22
9. MAINTENANCE AND WARRANTY 23

1. APPLICATION

The RPL1 power controller is destined to control the load power in function of the input control signal for following types of loads:

- resistive, wit a positive temperature coefficient of resistance;
  heaters made of alloys on the base of molybdenum (Mo), platinum (Pt), tantalum (Ta), tungsten (W), iron (Fe),
- resistive with a negative temperature coefficient resistance;
  heaters made of sintered carbide, graphitical heaters,
- resistive-inductance;
  transformer loaded by a resistive load, transformer loaded by a rectifier system.

The application area of RPL1 power controllers includes:

- electrical furnaces and drying constructions, particularly industrial tunnel and belt-type furnaces, furnaces for annealing and hard soldering, crucible furnaces and furnaces for hardening in salt bath,
- devices of mechanical engineering; aggregates and extruding presses for plastics, devices for winding and tempering of springs, spot welding and seam welders,
- production of glass and glazing; installations and devices for drying in infrared and ultraviolet radiation, ladles for glass melt and heating of feeding devices,
- chemical and petroleum industries; facing heaters of tube installations, preheating installations.

2. BASIC REQUIREMENTS, OPERATIONAL SAFETY

Power controllers are applied in high-current installations in which devices under voltage can be a source of danger.

Considering the personnel safety, one should observe following principles:

- **Devices can be installed, serviced and maintained exclusively by a suitably qualified personnel, having essential knowledge about equipment.**

- **RPL1 power controllers should be connected to the power network according to the present operative regulations and standards concerning electrical installations, and concerning specially the protection against electric shocks.**

- **During the start and operation of the device, one must comply with**

recommendations included in this user's manual (and specially to sections 4, 5 and 6).

Qualified personnel defines persons which are acquainted with the user's manual, assembly starting and service of the product, and have appropriate qualifications to carry out these activities.

3. POWER CONTROLLER SET

The set consists of:

- RPL1 power controller	1 pc.
- user's manual - quick start card	1 pc.
- warranty card	1 pc.

When unpacking the power controller, please check the delivery completeness and whether the type and version code on the data plate correspond to the order.

4. INSTALLATION

4.1. Overall and assembly dimensions

The RP1 power controller is destined to be mounted on a wall by means of holders. Power controller overall dimensions, spacing of assembly holes and the fixing way are presented on the fig. 4.1.

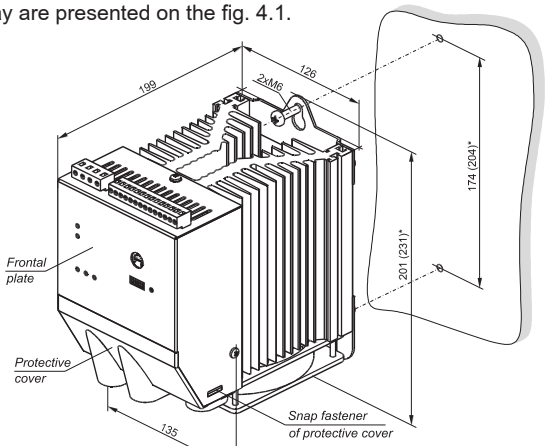

*) *Dimensions in parenthesis concern the version with a fun. Version RPL1- x4xxx (125 A)*

Fig. 4.1. Overall dimensions and fixing way of the RPL1 power controller

In case of mounting in a control cabinet, it is recommended to apply a forced air cycle.

RPL1 power controllers can be situated side by side preserving minimal spacing according to the fig. 4.2.

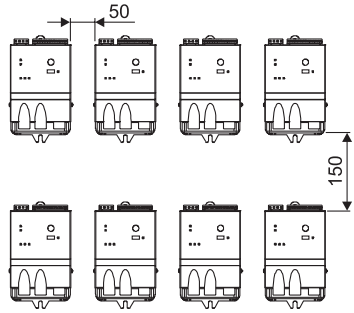

Fig. 4.2. Intervals between power controllers

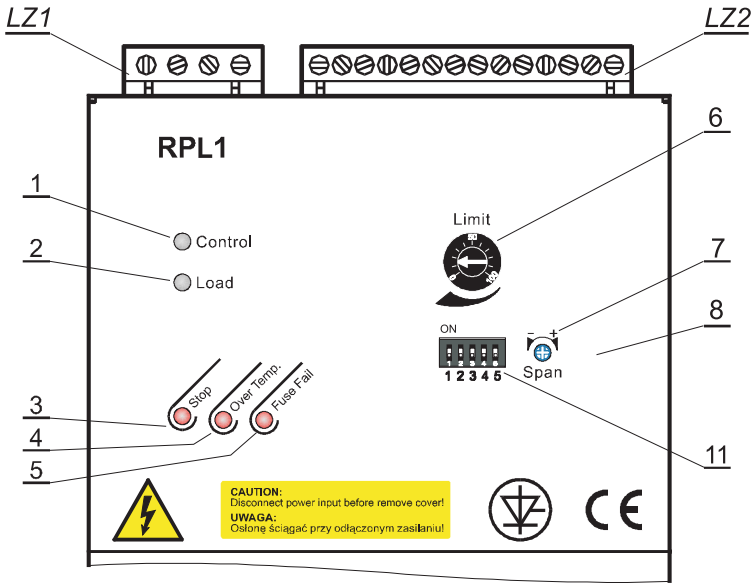

Fig. 4.3 View of the frontal plate

Servicing elements are disposed on the power controller frontal plate (Fig. 4.3.)

Signalling diodes:

- ***Control*** - green diode [1]; power controller readiness to work.
- ***Load*** - green diode [2]; triggering.
- ***Stop*** - red diode [3]; external triggering stoppage.
- ***Over Temp.*** - red diode [4], exceeding of the allowable temperature.
- ***Fuse fail*** - red diode [5], fuse burnout.

Potentiometers and switch:

- ***Limit*** - potentiometer [6]; limitation of the load current (only for phase control).
- ***Span*** - potentiometer [7]; control of the input line amplification (only for phase control).
- ***DIP Switch*** - DIP-SWITCH [8]; to configure analog inputs and the control mode.

4.2. Electrical connections

One must carry out electrical connections by means of following leads:

a) to *LZ1* and *LZ2* terminal strips (fig.4.3), - leads with cross-section from 0.35 up to 2.5 mm^2

b) to high-current terminals:

RPL1-x1xxx version	- leads with 6 mm^2 cross-section
RPL1-x2xxx version	- leads with 10mm^2 cross-section
RPL1-x3xxx version	- leads with 16 mm^2 cross-section
RPL1-x4xxx version	- leads with 35 mm^2 cross-section

c) to the protective terminal - lead with a cross-section at least the same as leads in high-current circuits

It is recommended to shield leads in the synchronisation circuit with the network voltage supplying the load and signalling leads on the *LZ2* terminal strip.

4.3. Choice of the control type

Depending on the kind of control and the input control signal, one must suitably set sections of the DIP- Switch, according to the table 1.

One must choose the kind of control at turned supply off.

Table 1

		DIP switch section				
Phase control (ver. RPL1-1xxx)		**1**	**2**	**3**	**4**	**5**
Input control signal	0...5 V	0	0	1	1	
	0...10 V	0	0	0	1	
	0...20 mA	0	0	0	1	
	4...20 mA	0	0	0	0	
Control type	Soft-Start off					0
	Soft-Start on					1

		DIP switch section				
Pulse control (ver. RPL1-2xxx)		**1**	**2**	**3**	**4**	**5**
Input control signal	0...5 V		1	1		0
	0...10 V		1	0		0
	0...20 mA		1	0		0
	4...20 mA		0	0		0
Control type	pulse - quick cycle	1			1	
	pulse - slow cycle	0			1	
	relay	1			0	

0 – open switch – in position down (OFF),
1 – close switch – in position up (ON),
– State resulting from other settings.

4.4. Connection of control signals

4.4.1. Connection of control to the LZ2 terminal strip

It is recommended to use shielded leads and a separate control and high-current installation to connect control signals to the LZ2 terminal strip.

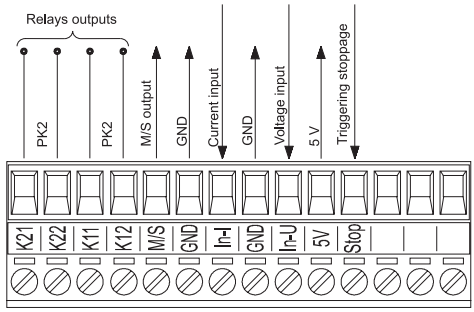

Fig. 4.4. Description of the LZ2 terminal strip

4.4.2. Input control signal

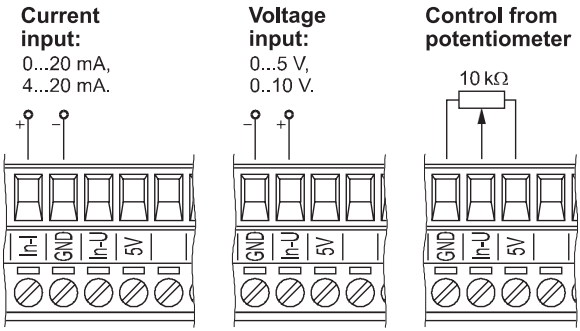

Fig. 4.5. Connection of control signals

a) by analog signal

The control from a voltage or current control signal source or from the potentiometer is possible. In case of control from the potentiometer, the voltage input should be set on the 0...5 V range.

b) by pulse signal (only for control of relay type)

One must connect the control signal (4...32 V) to terminals of the voltage input ***In-U***, set on the 0...5 V range.

4.4.3. Auxiliary inputs/ outputs

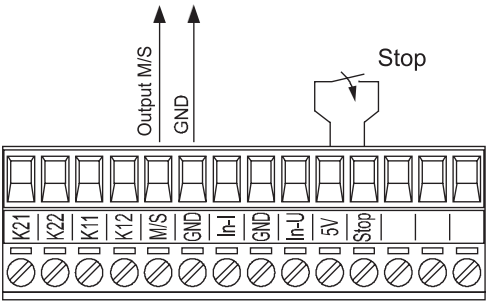

Fig. 4.6. Analog outputs

a) triggering stoppage ***STOP***

One can carry out the triggering stoppage, short-circuiting ***5 V*** and ***STOP*** terminals on the terminal strip. The ***STOP*** input is active in the 4...8 V voltage range.

b) Output ***M/S*** (only for ***pulse/ relay*** control)

The output of „***M****aster*/***S****lave*" type is used when the power controller works as a master device.

Output load-carrying capacity: max 5 mA.

4.4.4. Relay outputs

I_N = 60 mA/ 230 V a.c./d.c.
R_{on} = 35 Ω
U_{isol} = 1500 V_{RMS}

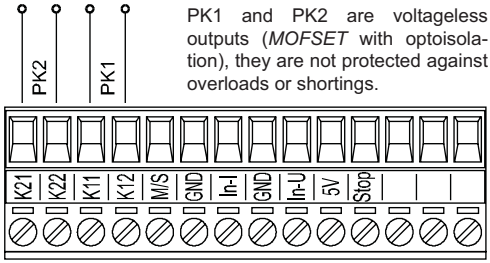

PK1 and PK2 are voltageless outputs (*MOFSET* with optoisolation), they are not protected against overloads or shortings.

Fig. 4.7. Relay outputs

a) Output ***PK1***

Signalling of damaged fuse

b) Output ***PK2***

Signalling of an incorrect working state:

- active signal of triggering stoppage - *STOP*,
- exceed of allowable radiator temperature,
- fuse damage.

4.5. Connection of supply and load

U1 and U2 high-current sockets to connect supplies of the load circuit, the terminal PE of the protection wire and the fuse B1, are accessible after removing the protective cover, fig.4.8.

The protective cover is closed by two lateral fasteners.

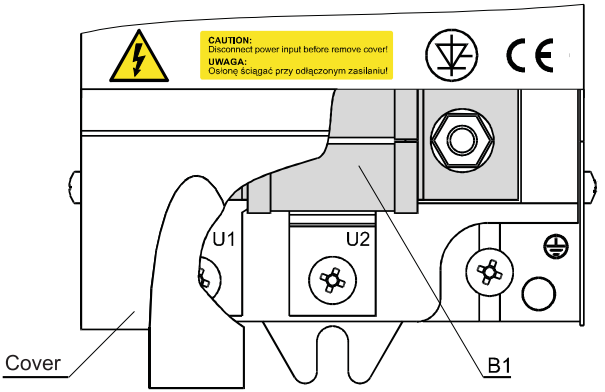

Fig. 4.8. View of the high-current power controller circuit

4.5.1. Load connection in single-phase system

For terminals **L1** and **N** of the **LZ1** terminal strip, należy podłączyć zasilanie 230 V/50 Hz.

In the case of phase control (lecture RPL1-1xx) the **S1** and **S2** terminals of the synchronisation system should be connected to the load supply circuit.

Depending on the controler version:

230 V a.c. – version RPL1-xx1xx,
400 V a.c. – version RPL1-xx2xx,
500 V a.c. – version RPL1-xx3xx.

a) Load supply: U_{load} = 230 V,
U_{GTS} supply = 230 V

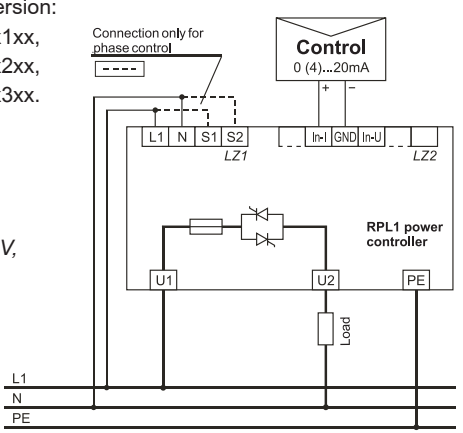

b) Load supply: U_{load} = 400 V,
U_{GTS} supply = 230 V

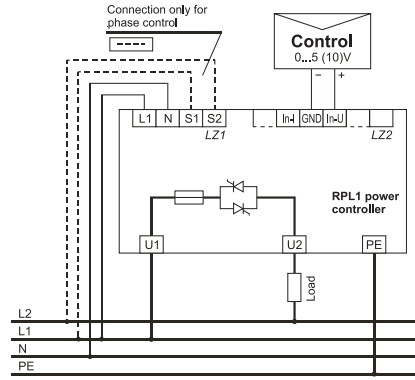

Fig. 4.9. Connection diagramm of load in single-phase system.

4.5.2. Load connection in three-phase system

The power control is possible in the three-wire three-phase system using two power controllers (only for RPL1-2xx version).

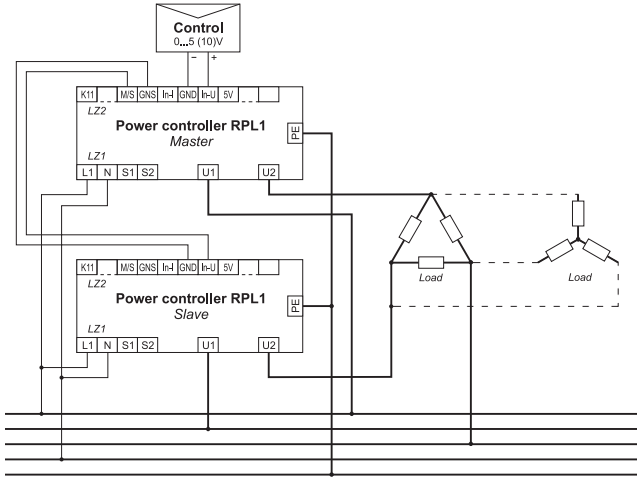

Fig. 4.10 Connection diagram of a load in three-phase system

5. DESCRIPTION OF CONTROL TYPES

5.1. Control of ON-OFF type

At the on-off control, the delivered power to the load is described by the following dependence:

$$P_o = \begin{cases} 0 & \text{for } X_{in} = 0 \\ P_{o\,max} & \text{for } X_{in} = X_{max} \end{cases} \qquad [1]$$

Where: P_o - delivered power to the load
X_{in} - value of the input control signal

The feed of the voltage signal on the control input, causes the turn of the load current on. The turn on follows immediately or at the nearest actual supply voltage value transition across zero. Runs of signals describing the power controller operation for the control of on-off type are shown on the fig. 5.1.

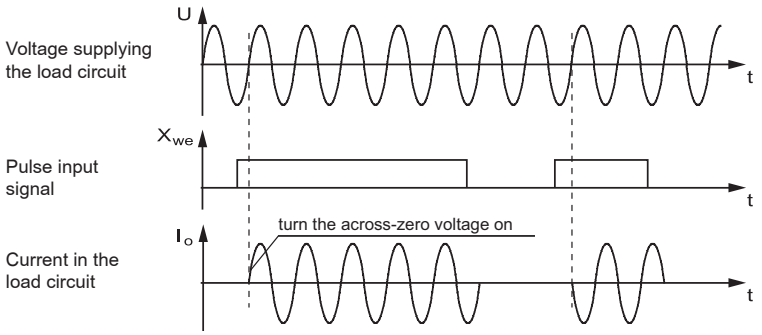

Fig. 5.1. Control of on-off type, runs of occurring signals (for resistive load).

5.2. Pulse control

Pulse control consists on the change of the pulse-duty factor and the frequency of power P_0 delivered to the load in function of the analog control signal, at the same time the output current is turned on synchronously with the transition of the supply voltage across zero. Runs of signals are presented on the fig. 5.2.

The power value in the pulse period T according to the formula [2], is defined by the dependence [3]:

$$T = T_s (N_{on} + N_{off}) \qquad [2]$$

$$P_o = P_{o\,max} \cdot \gamma = P_{o\,max} \frac{N_{on}}{N_{on} + N_{off}} = P_{o\,max} \frac{X_{in}}{X_{in\,max}} \qquad [3]$$

where: T_s - period of the supply voltage,

γ - pulse-duty factors,

N_{on} - number of turned periods on,

N_{off} - number of periods off,

X - value of analog control signal.

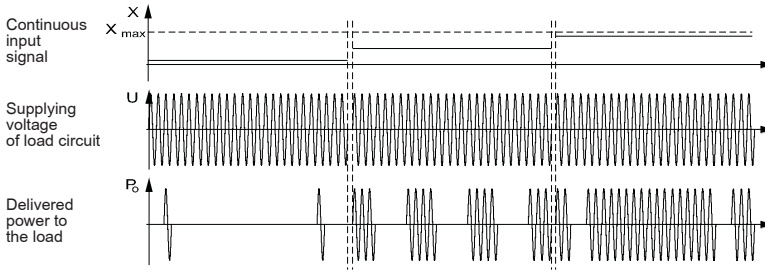

Fig. 5.2. Pulse control with a variable pulse frequency, runs of occurring signals

The RPL1 power controller has following kinds of pulse control:

- **Quick cycle**, in which for X=1/2 (X_{max} - X_{min}),

$$N_{on} = N_{off} \approx 25, \qquad \text{however } f_{i\,max} \approx 1 \text{ Hz}$$

- **Slow cycle**, in which for X=1/2 (X_{max} - X_{min})

$$N_{on} = N_{off} \approx 100, \qquad \text{however } f_{i\,max} \approx 0.25 \text{ Hz}$$

Where: $f_{i\,max}$- maximal pulse frequency

Runs of characteristic quantities for the pulse control are presented on the fig, 5.3.

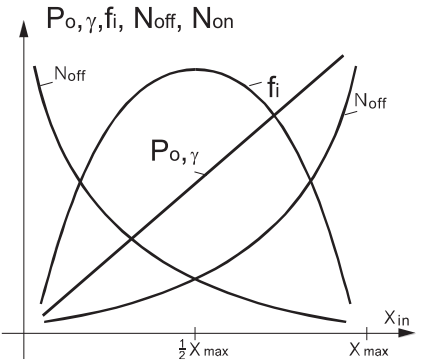

Fig. 5.3. Runs of characteristic quantities for the pulse control.

5.3. Phase control

At phase control, a continuous change of delivered power to the load occurs, it is realised by the change of the load current turn on angle in the function of the analog control signal.

Runs of signals for this kind of control for a resistive load are presented on the fig. 5.4.

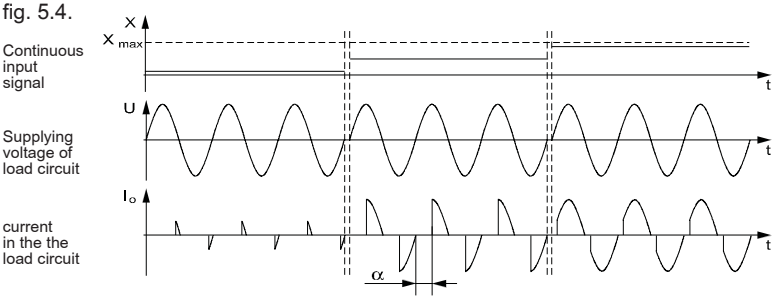

Fig. 5.4. Phase control, runs of occurring signals

5.4. Control of the input line amplification *)

The „***Span***" potentiometer serves to set the amplification of the input line in the control range from 50 up to 100% of the input control signal Xwe.
The gain control takes into account the phase shift between current and voltage in the control of receivers with a resistive-inductive RL or inductive L character.

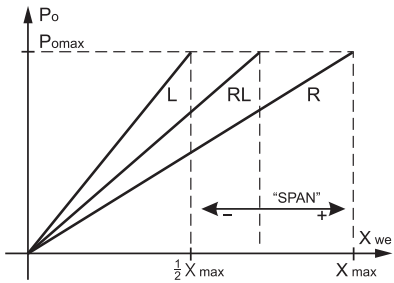

Fig. 5.5. The relationship of the control signal from the nature of the load.

5.5. Limitation of the load current *)

If the current value in the load circuit exceeds the boundary value set by means of the „***Limit***" potentiometer, then the current limitation operates regardless of the control signal value. The setting of the potentiometer on minimum, means the turn of the current limitation operation off.

5.6. Overload protection *)

The output circuit of the power controller is protected against its overload. The protection is set on 125% of the power controller rated current.

The exceed of this value will cause the action of current limitation.

5.7. Soft-Start function*)

In the case of large surge currents (toroidal transformers, furnaces with graphite lined heaters, etc.), you must enable Soft-Start function, which enables a smooth access to the setpoint value of the output current with a delay up to a maximum of 2 s (reaction to the change swept the control signal).

Function is active in the entire range of adjustment.

5.8. Signalling of maximal radiator temperature exceed

The exceed of the 85°C radiator temperature causes the automatic triggering stoppage and display of signalling on the „***Over Temp***" diode, and the ***PK2*** relay turn on.

Note: The driver will automatically go into operating mode after cooling the heater below 60°C, therefore, immediately after the alarm, disconnect the power supply of the device.

* *Applies only to control the phase. 2*

6. CONTROLLER OPERATION

In the order please follow these steps:

a) install the power controller,
b) carry out electrical connecitons,
c) set the control type and the input control signal,
d) turn on the supply voltage of the load circuit and of the gate triggering system

in the case of phase control in addition:

e) set the amplification of the input line*

For resistance load the „***Span***" potentiometer must be set on maximum.

In case of inductive load, the phase shift between current and voltage must be taken into consideration, decresing the amplifiaction in such a way as to obtain current control on the receiver to the full extent of the control signal.

f) set the current limitation*

At the maximal value of the input control signal, set the required current value increasing the seting on the „***Limit***" potentiometer.

*) *Getting the right tune using potentiometers shall be achieved experimentally and should be performed by appropriately trained employee.*

7. TECHNICAL DATA

7.1 Electrical parameters of the high-current circuit

Table 2

No.	Max. output current	Supply voltage of the load circuit	Max. load power	Lost power in thyristors	Fuse parameters	
					$\int i^2 dt$ at 415 V	Designation and manufacture
1	**25 A**	230 V / 50 Hz 400 V / 50 Hz 500 V / 50 Hz	5.7 kW 10.0 kW 12.5 kW	< 40 W	280 A^2s	**35 (40) A** 35FE – Bussmann 6.9 gRB 000 BS 88/40 – FERRAZ
2	**40 A**	230 V / 50 Hz 400 V / 50 Hz 500 V / 50 Hz	9.2 kW 16.0 kW 20.0 kW	< 65 W	440 A^2s	**50 A** 50FE – Bussmann 6.9 gRB 000 BS 88/50 – FERRAZ
3	**70 A**	230 V / 50 Hz 400 V / 50 Hz 500 V / 50 Hz	16.0 kW 28.0 kW 35.0 kW	< 120 W	3600 A^2s	**100 A** 100FE – Bussmann 6.9 URB 000 BS 88/100 – FERRAZ
4	**125 A**	230 V / 50 Hz 400 V / 50 Hz 500 V / 50 Hz	28.0 kW 50.0 kW 62.0 kW	< 215 W	9600 A^2s	**160 (200) A** 200FEE – Bussmann 6.9 URB 000 BS 88/160 – FERRAZ

Leakage current	< 20 mA
Kind of load	resistance or resistance-inductance load (0.2 < cosφ <1) in compliance with the application category AC-51, EN 60947-4-3

7.2 Electrical parameters of the supply and control circuit:

- GTS supply voltage	195...230...253 V a.c.	
- supply voltage frequency	50 Hz	
- power consumption	≤ 4.5 VA	
- synchronizing input	230 V a.c. - ver. RPL1-xx1xx,	
	400 V a.c. - ver. RPL1-xx2xx,	
	500 V a.c. - ver. RPL1-xx3xx,	
- voltage control input	0...5 V	R_{in} = 20 kΩ
	0...10 V	R_{in} = 40 kΩ
- current control input	0(4)...20 mA	R_{in} =125 Ω
- pulse control input	0/4....32 V	R_{in} = 20 kΩ
- *STOP* signal input	4...8 V	R_{in} = 1 kΩ
- *M/S* signal output	6...12 V	labil
- load-carrying capacity of *5 V* output		25 mA
- load-carrying capacity of relay outputs		60 mA/350 V, R_{on} =35 Ω U_{izol} = 1500 V_{RMS}

7.3. Other parameters:

- working temperature	0... 40°C
- storage temperature	- 25... 55°C
- humidity	< 90% (without condensation)
- working position	vertical
- dimensions:	
	135 x 201 x 199 mm
	135 x 231 x 199 mm - ver. RPL1-x4xx (version with a fan)
- weight	4.5 kg
	5.0 kg - ver. RPL1-x4xx (version with a fan)

7.4. Safety requirements:

- maximal phase-to-earth working voltage	320 V for power and supply circuits, 50 V for other circuits

- pollution degree	2
- installation category	III
- protection degree from terminal side	IP 10, acc. to EN 60529
- housing protection degree	IP 20, acc. to EN 60529

7.5. Electromagnetic compatibility:

- immunity noise	EN 60947-4-3
- emission noise	EN 60947-4-3

The RPL1 power controller fulfils requirements of the EN 60947-4-3 standard.

NOTE: In case of phase control, the power controller fulfils requirements of the electromagnetic compatibility in relation to the interference emission, only when working near the of the supply voltage through zero.

8. ORDERING CODES

Table 3

RPL1 -	X	X	X	XX	X	X
Control:						
phase	1					
pulse / on/off	2					
Current range:						
maximal output current 25 A		1				
maximal output current 40 A		2				
maximal output current 70 A		3				
maximal output current 125 A*		4				
Load voltage:						
supply voltage **- 195...230...253 V a.c.**			1			
supply voltage **- 340...400...440 V a.c.**			2			
supply voltage **- 425...500...550 V a.c.**			3			
Version:						
standard				00		
custom-made**				XX		
Language:						
Polish					P	
English					E	
other**					X	
Acceptance tests:						
without additional quality inspection requirements						0
with an extra quality inspection certificate						1
other requirements**						X

* the version RPL1- x4xx has a fixed fan
** after agreeing with the manufacturer

Ordering example:

The code: **RPL1 - 1 - 1 - 2 - 00 - E - 0** means:

RP1 - power controller of RPL1 type
1 - phase control
1 - output current maximal 25 A
2 - supply voltage **-340...400...440 V a.c.**
00 - standard version
E - English
0 - without additional quality inspection requirements.

9. MAINTENANCE AND WARRANTY

The RPL1 power controller does not require any special periodical maintenance.
In case of replacement of the damaged fuse, you must:

- disconnect the power supply of the power controller from power clamp and *LZ1* terminal,

- remove the cover, fig. 4. 10,

- replace fuse B1, type according to the table 2.

In case of some incorrect operations:

After the dispatch date and within the period stated in the warranty card

One should return the power controller to the Manufacturer's Quality Inspection Dept. If the device has been used in compliance with the instructions, the Manufacturer warrants to repair it free of charge. The disassembling of the housing causes the cancellation of the granted warranty.

After the warranty period:

One should send the device to repair it in an authorized service workshop. Spare parts are available for the period of five years from the date of purchase.

Our policy is one of continuous improvement and we reserve the right to make changes in design and specifications of any products as engineering advances or necessity requires and revise the above specifications without notice.

LUMEL S.A.
ul. Słubicka 1, 65-127 Zielona Góra, POLAND
tel.: +48 68 45 75 100, fax +48 68 45 75 508
www.lumel.com.pl,
e-mail: lumel@lumel.com.pl

Export department:
tel.: (+48 68) 45 75 139, 45 75 233, 45 75 321, 45 75 386
fax.: (+48 68) 32 54 091
e-mail: export@lumel.com.pl

RPL1-09