# RPL1 POWER CONTROLLER

LUMEL

## Features:

Phase control | ON/OFF control | Impulse control | Soft Start | $I_{LIM}$ | SPAN

## Input:

0..10 V 0..20 mA

## Output:

125 A | 2x

## Galvanic isolation:

Sup.

- For power control of resistive and resistive-inductive load (transformer connected to resistive load or to rectifier circuit).
- Control mode: on/off (similar to solid state relay), pulse, phase.
- Amplification of input control signal (SPAN).
- Limitation of load current.
- Overload protection.
- Signalization of exceeding the maximum temperature of radiator.
- Control of 3-phase load (requires two RPL1 controller units).

## Example of application

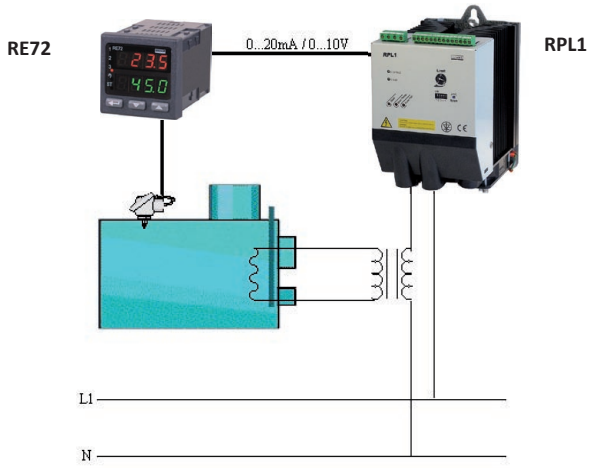


## Inputs

| Input type | Quantity | Range | Remarks |
|---|---|---|---|
| Synchronization input | – | 230 V a.c. – version RPL1-xx1xx,<br>400 V a.c. – version RPL1-xx2xx,<br>500 V a.c. – version RPL1-xx3xx | - |
| Control voltage input | 1 | 0...5 V<br>0...10 V | $R_{in}$ = 20 kΩ<br>$R_{in}$ = 40 kΩ |
| Control current input | 1 | 0(4)...20 mA | $R_{in}$ = 125 Ω |
| Control pulse input | 1 | 0/4...32 V | $R_{in}$ = 20 kΩ |
| STOP signal input | 1 | 4...8 V | $R_{in}$ = 1 kΩ |

## Outputs

| Output type | Quantity | Range | Remarks |
|---|---|---|---|
| Voltage (Master/Slave) | 1 | 6 ...12 V | non stabilized |
| Relay | 2 | NO | 60 mA/350 V, $R_{on}$ = 35 Ω , $U_{izol}$ =1500 $V_{RMS}$ |

## Electrical parameters of power circuit

| No. | Max. output current | Load supply voltage | Max. load | Lose power in thyristor |
|---|---|---|---|---|
| 1 | 25 A | 230 V / 50 Hz<br>400 V / 50 Hz<br>500 V / 50 Hz | 5.7 kW<br>10.0 kW<br>12.5 kW | < 40 W |
| 2 | 40 A | 230 V / 50 Hz<br>400 V / 50 Hz<br>500 V / 50 Hz | 9.2 kW<br>16.0 kW<br>20.0 kW | < 65 W |
| 3 | 70 A | 230 V / 50 Hz<br>400 V / 50 Hz<br>500 V / 50 Hz | 16.0 kW<br>28.0 kW<br>35.0 kW | < 120 W |
| 4 | 125 A | 230 V / 50 Hz<br>400 V / 50 Hz<br>500 V / 50 Hz | 28.0 kW<br>50.0 kW<br>62.0 kW | < 215 W |

- Leakage current in the thyristor circuit: < 20 mA
- Load type: resistive or resistive-inductive (0.2<cosφ<1), compatible with the category of operational use AC-51 acc. to EN 60947-4-3


**Export department:**
**Tel**: +48 68 45 75 139/ 276/ 305/ 386
**Fax**: +48 68 32 54 091
**e-mail:** export@lumel.com.pl

LUMEL S.A.
ul. Słubicka 1
65-127 Zielona Góra
POLAND
**WWW.LUMEL.COM.PL**

# RPL1 POWER CONTROLLER

## EXTERNAL FEATURES

| | |
|---|---|
| Overall dimensions | 135 x 201 x 199 mm<br>135 x 231 x 199 mm - ver. RPL1-x4xx (version with a fan) |
| Weight | 4.5 kg<br>5.0 kg – ver. RPL1-x4xx (version with a fan) |

## RATED OPERATING CONDITIONS

| | |
|---|---|
| Supply voltagea N-L1 | 195 ... 230 ... 253 V a.c. |
| Supply voltage frequency | 50 Hz |
| Power consumption | ≤ 4.5 VA |
| Temperature: ambient | 0 ... 40°C |
| Temperature: storage | -25...55 |
| Humidity | < 90 % , without condensation |
| Operating position | vertical |

## SAFETY AND COMPATIBILITY REQUIREMENTS

| | | |
|---|---|---|
| Electromagnetic compatibility | noise immunity | acc. to EN 60947-4-3 |
| | noise emissions | |
| Pollution level | 2 | |
| Installation category | III | |
| Protection grade from terminal side | IP10 acc. to EN 60529 | |
| Protection grade from casing side | IP20 acc. to EN 60529 | |
| Noise immunity | EN 60947-4-3 | |
| Maximal phase-to-earth voltage | 320 V for power circuits and supply,<br>50 V for other circuits | |

Power controller RPL1 meets the requirements of the norm EN 60947-4-3.

**Caution:** In the case of phase control, the controller meets the requirements of electromagnetic compatibility in terms of noise emissions, only when working near the transition of the supply voltage across zero.

## CONNECTION DIAGRAMS

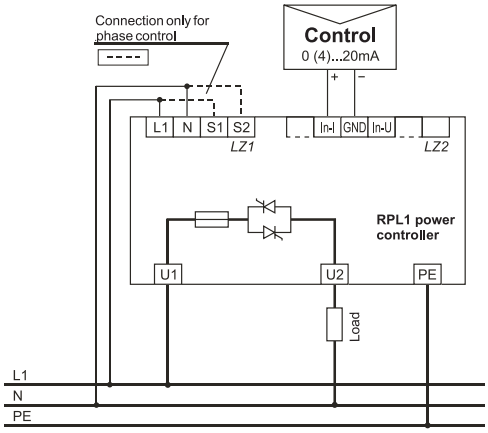


a) load supply $U_{LOAD}$ = 230 V, supply $U_{UWB}$ = 230 V.

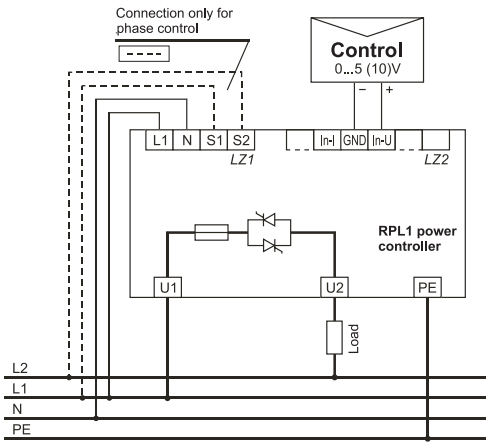


b) load supply $U_{LOAD}$ = 400 V, supply $U_{UWB}$ = 230 V.

## ORDERING

| | | | | | | |
|---|---|---|---|---|---|---|
| RPL1 - | X | X | X | XX | X | X |
| **Control:** | | | | | | |
| phase | 1 | | | | | |
| pulse / on/off | 2 | | | | | |
| **Current range:** | | | | | | |
| maximal output current **25 A** | | 1 | | | | |
| maximal output current **40 A** | | 2 | | | | |
| maximal output current **70 A** | | 3 | | | | |
| maximal output current **125 A*** | | 4 | | | | |
| **Load voltage:** | | | | | | |
| supply voltage **- 195...230...253 V a.c.** | | | 1 | | | |
| supply voltage **- 340...400...440 V a.c.** | | | 2 | | | |
| supply voltage **- 425...500...550 V a.c.** | | | 3 | | | |
| **Version:** | | | | | | |
| standard | | | | 00 | | |
| custom-made** | | | | XX | | |
| **Language:** | | | | | | |
| Polish | | | | | P | |
| English | | | | | E | |
| other** | | | | | X | |
| **Acceptance tests:** | | | | | | |
| without additional quality inspection requirements | | | | | | 0 |
| with an extra quality inspection certificate | | | | | | 1 |
| other requirements** | | | | | | X |

* the version RPL1- x4xx has a fixed fan

** after agreeing with the manufacturer

**Ordering example:**

The code: **RPL1 - 1 - 1 - 2 - 00 - E - 0** means:

- **RP1** - power controller of RPL1 type
- **1** - phase control
- **1** - output current maximal **25 A**
- **2** - supply voltage **- 340...400...440 V a.c.**
- **00** - standard version
- **E** - English
- **0** - without additional quality inspection requirements.

## SEE ALSO:

3-phase power controller - RP3.

Controllers of RE72 and RE82 type.

Temperature sensor.

Castel Maggiore (BO) 40013
Via Lirone 60/i

e-mail: info@eurotecsrl.com
Tel: +39 051/6321595
Website: www.eurotecsrl.com

C.F.: 04103780377
P.I.: 01596581205