EUROTEC
TECNOLOGIE IMPIANTISTICHE - AUTOMAZIONE - TELECONTROLLO

LUMEL
EVERYTHING COUNTS

POWER CONTROLLER
RP1

USER'S MANUAL

CE

POWER CONTROLLER RP1 type

USER'S MANUAL

CONTENTS

1. APPLICATION.....5

2. BASIC REQUIREMEMNTS, OPERATIONAL SAFETY 5

3. POWER CONTROLLER SET.....6

4. INSTALLATION.....6

4.1. Overall and assembly dimensions 6

4.2. Electrical connections 8

4.3. Choice of the control type 8

4.4. Connection of control signals.....9

4.5. Connection of supply and load.....12

5. POWER CONTROL SERVICE 15

6. DESCRIPTION OF CONTROL TYPES 16

6.1. Control of ON-OFF type.....16

6.2. Pulse control 17

6.3. Phase control 19

6.4. Limitation of the load current.....19

6.5. Triggering delay of soft-start type.....19

6.6. Control of the initial triggering angle value.....20

6.7. Control of the input line amplification 20

6.8. Check and current signalling in the load circuit.....20

6.9. Signalling of supply correctness 20

6.10. Signalling of maximal radiator temperature exceeding 21

6.11. Error signalling 21

6.12. Overload protection.....21

7. SPECIFICATIONS.....22

7.1. Electrical parameters of the high-current circuit.....22

7.2. Electrical parameters of the supply and control circuit.....22

7.3. Other parameters.....23

7.4. Safety requirements.....23

7.5. Electromagnetic compatibility 23

8. ORDERING CODES 24

9. MAINTENANCE AND WARRANTY 25

1. APPLICATION

The RP1 power controller is destined to control the load power in function of the input control signal for following types of loads:

- resistive, wit a positive temperature coefficient of resistance, heaters made of alloys on the base of molybdenum (Mo), platinum (Pt), tantalum (Ta), tungsten (W), iron (Fe),
- resistive with a negative temperature coefficient resistance, heaters made of sintered carbide, graphitical heaters,
- resistive-inductance, transformer loaded by a resistive load, transformer loaded by a rectifier system.

The application area of RP1 power controllers includes:

- electrical furnaces and drying constructions, particularly industrial tunnel and belt-type furnaces, furnaces for annealing and hard soldering, crucible furnaces and furnaces for hardening in salt bath,
- devices of mechanical engineering, aggregates and extruding presses for plastics, devices for winding and tempering of springs, spot welding and seam welders,
- production of glass and glazing, installations and devices for drying in infrared and ultraviolet radiation, ladles for glass melt and heating of feeding devices,
- chemical and petroleum industries, facing heaters of tube installations, preheating installations

2. BASIC REQUIREMENTS, OPERATIONAL SAFETY

Power controllers are applied in high-current installations in which devices under voltage can be a source of danger.

Considering the personnel safety, one should observe following principles:

- Devices can be installed, serviced and maintained exclusively by a suitably qualified personnel, having essential knowledge about equipment.
- RP1 power controllers should be connected to the power network according to the present operative regulations and standards concerning electrical installations, and concerning specially the protection against electric shocks.
- During the start and operation of the device. One must comply with recommendations included in this user’s manual (and specially to sections 4, 5 and 6). Qualified personnel defines persons which are acquainted with the user’s manual, assembly starting and service of the product, and have appropriate qualifications to carry out these activities.

3. POWER CONTROLLER SET

The set consists of:
- RP1 power controller 1 pc.
- user's manual 1 pc.
- warranty card 1 pc.
- Quick start card 1 pc

When unpacking the power controller, please check the delivery completeness and whether the type and version code on the data plate correspond to the order.

4. INSTALLATION

4.1. Overall and assembly dimensions

The RP1 power controller is destined to be mounted on a wall by means of holders. Power controller overall dimensions, spacing of assembly holes and the fixing way are presented on the fig. 1.

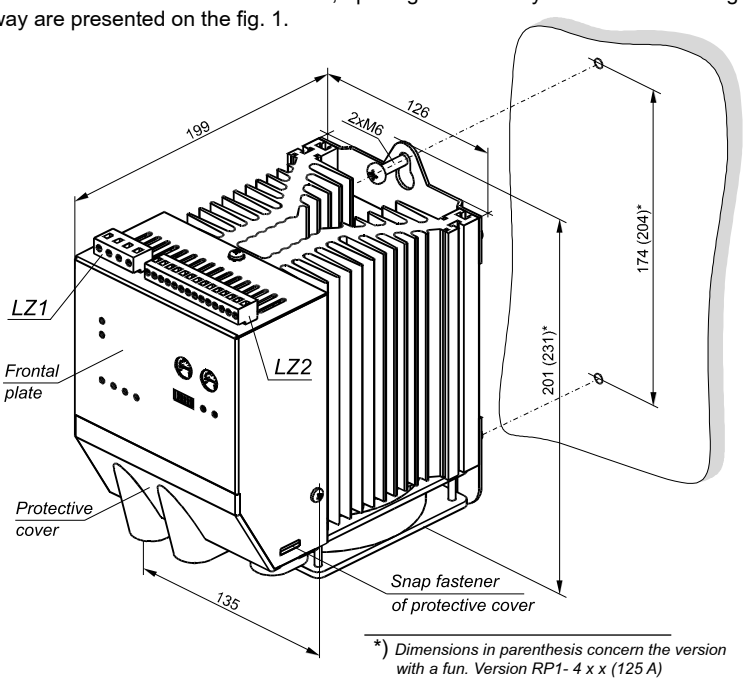

Fig. 1. Overall dimensions and fixing way of the RP1 power controller

In case of mounting in a control cabinet, it is recommended to apply a forced air cycle.

RP1 power controllers can be situated side by side preserving minimal spacing according to the fig. 2.

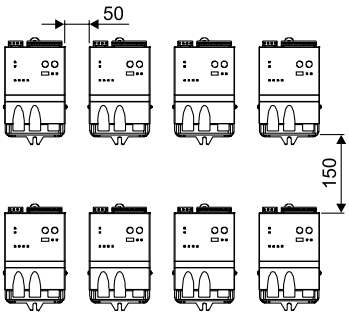

Fig. 2. Intervals between power controllers

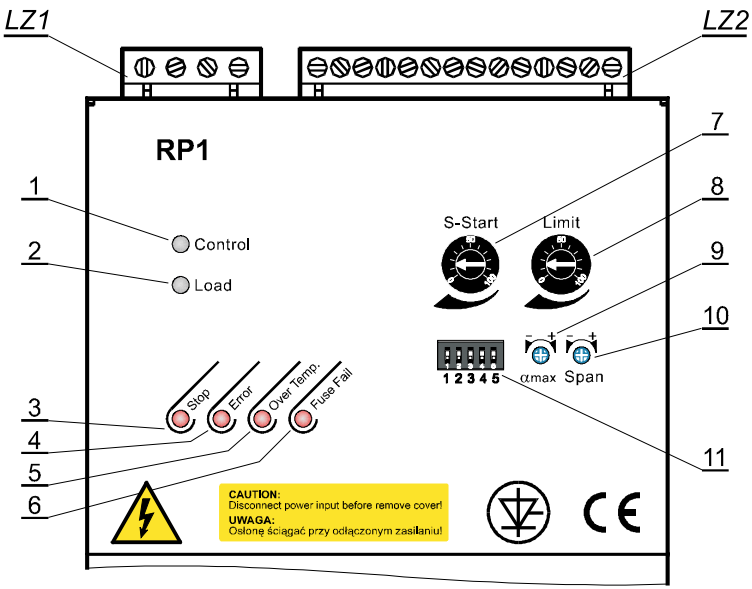

Fig. 3 View of the frontal plate

Servicing elements are disposed on the power controller frontal plate (Fig. 3.)

Signalling diodes:

- ***Control*** - two-colour diode [1], supply correctness and power controller readiness to work.
- ***Load*** - two-colour diode [2], passage of current through the load (when $I_{load} > 5\% I_N$ of the controller).
- ***Stop*** - red diode [3], external triggering stoppage.
- ***Error*** - red diode [4], error related to the power controller work.
- ***Over Temp.*** - red diode [5], exceeding of the allowable temperature.
- ***Fuse fail*** - red diode [6], fuse burnout.

Potentiometers and switch:

- ***S-Start*** - potentiometer [7], control of the soft-start function duration.
- ***Limit*** - potentiometer [8], limitation of the load current.
- ***max*** - potentiometer [9], control of the initial triggering angle value.
- ***Span*** - potentiometer [10], control of the input line amplification.
- ***Switch*** - DIP-SWITCH [11], to configure analog inputs and the control mode

4.2. Electrical connections

One must carry out electrical connections by means of following leads:

a) to *LZ1* and *LZ2* terminal strips, - leads with cross-section from 0.35 up to 2.5 mm^2

b) to high-current terminals:

RP1-1xxx version	- leads with 6 mm^2 cross-section
RP1-2xxx version	- leads with 10mm^2 cross-section
RP1-3xxx version	- leads with 16 mm^2 cross-section
RP1-4xxx version	- leads with 35 mm^2 cross-section

c) to the protective terminal - lead with a cross-section at least the same as leads in high-current circuits

It is recommended to shield leads in the synchronisation circuit with the network voltage supplying the load and signalling leads on the *LZ2* terminal strip.

4.3. Choice of the control type

Depending on the kind of control and the input control signal, one must suitably set sections of the DIP, according to the table 1.

One must choose the kind of control at turned GTS supply off, (see p. 4.5.1)

Table 1

		DIP switch section				
		1	**2**	**3**	**4**	**5**
Input control signal	0...5 V	1	0			
	0...10 V	0	0			
	0...20 mA	0	0			
	4...20 mA	0	1			
Kind of control	Phase			0	0	0
	Pulse - quick cycle			1	0	0
	Pulse - slow cycle			1	1	0
	On-Off (switching at zero voltage)			1	1	1
	On-Off (prompt switching)			1	0	1

0 - Open switch, 1 - short-circuited switch,

- State resulting from other settings.

4.4. Connection of control signals

4.4.1. Connection of control to the LZ2 terminal strip

It is recommended to use shielded leads and a separate control and high-current installation to connect control signals to the LZ2 terminal strip.

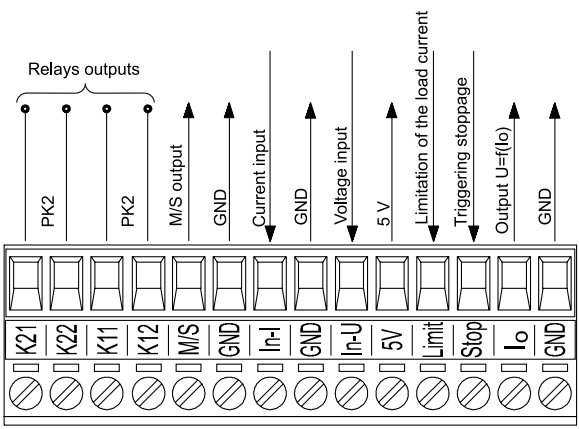

Fig. 4. Description of the LZ2 terminal strip

4.4.2. Input control signal

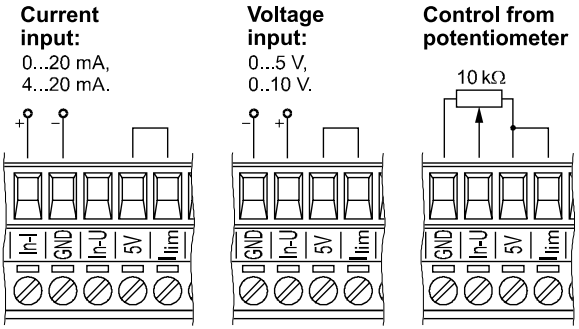

Fig. 5. Connection of control signals

a) by analog signal

The control from a voltage or current control signal source or from the potentiometer is possible. In case of control from the potentiometer, the voltage input should be set on the 0...5 V range.

b) by pulse signal

One must connect the control signal (4...32 V) to terminals of the voltage input ***IN-U***, set on the 0...5 V range.

4.4.3. Limitation of the load current

There is the possibility to limit the load current from the external potentiometer which should be connected according to the presented drawing. One must set the „***Limit***" potentiometer on minimum.

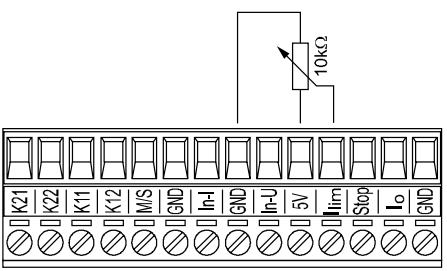

Fig. 6. Limitation of the load current

In case of using the current limitation potentiometer on the power controller frontal plate, one must short-circuit 5 V and Limit terminals, fig. 5.

4.4.4. Triggering stoppage

One can carry out the triggering stoppage, short-circuiting ***5 V*** and ***STOP*** terminals on the terminal strip. The ***STOP*** input is active in the 4...32 V/5 mA voltage range.

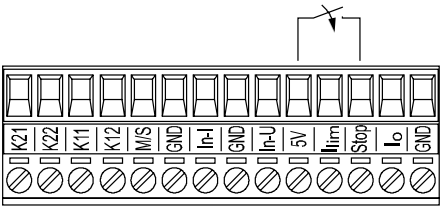

Fig. 7. Triggering stoppage

4.4.5. Analog outputs

a) Output ***U = f (Io)***

0...5 V/5 mA output voltage, proportional to the current value in the load circuit.

b) Output ***M/S***

The output of „Master/Slave" type is used when the power controller works as a master device.

The slave power controller must be set in the turn on working mode at the zero across of the supply voltage. Output load-carrying capacity: max 5 mA Example of connection is shown on the fig. 13.

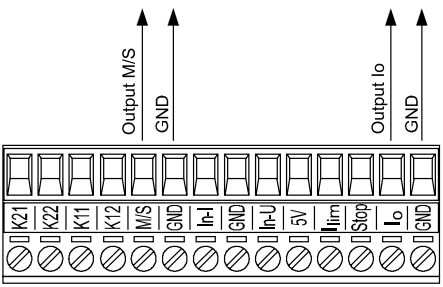

Fig. 8. Analog output

4.4.6. Relay outputs

Semiconductor relays of *MOSFET* type.

a) Output ***PK1***

Signalling of damaged fuse

b) Output ***PK2***

Signalling of an incorrect working state:

- lack of supervision on the control - ERROR,
- active signal of triggering stoppage - STOP,
- lack of synchronisation,
- fuse damage,
- exceed of allowable radiator temperature.

I_N = 60 mA/ 230 V a.c./d.c.
R_{on} = 35 Ω
U_{isol} = 1500 V_{RMS}

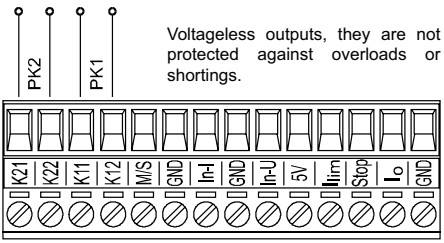

Fig. 9. Relay outputs

4.5. Connection of supply and load

U1 and U2 high-current sockets to connect supplies of the load circuit, the terminal PE of the protection wire and the fuse B1, are accessible after removing the protective cover, fig.10.

The protective cover is closed by two lateral fasteners, fig. 1.

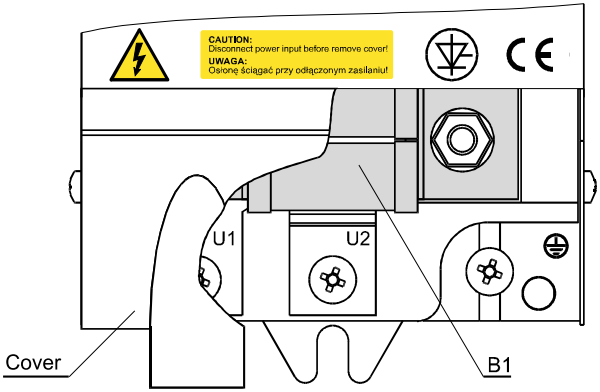

Fig. 10. View of the high-current power controller circuit

4.5.1. Connection of the supply and synchronisation circuit to the LZ1 terminal strip

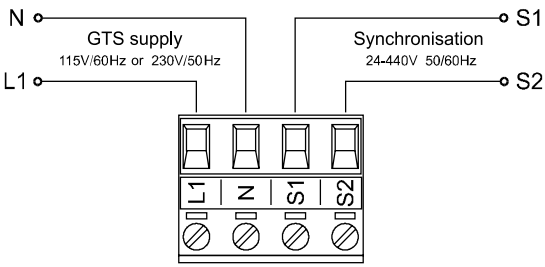

Fig. 11. Description of the LZ1 terminal strip

One must connect the **G**ate **T**riggering **S**ystem (**GTS**) to the LZ1 terminal strip depending on the power controller version, 115 V/60 Hz or 230 V/50 Hz.

S1 and **S2** terminals of the synchronisation system should be connected to the load supply circuit.

4.5.2. Load connection in single-phase system

a) Load supply: U_{load} = 230 V, U_{GTS} supply = 230 V

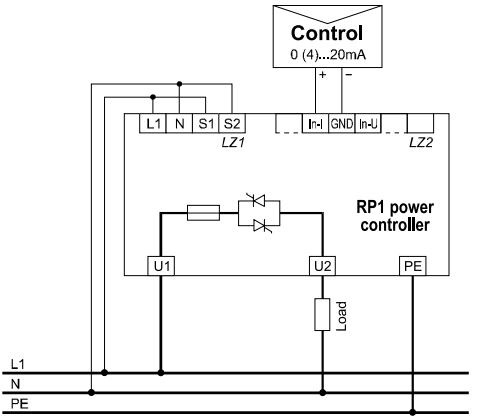

b) Load supply: U_{load} = 400 V, U_{GTS} supply = 230 V

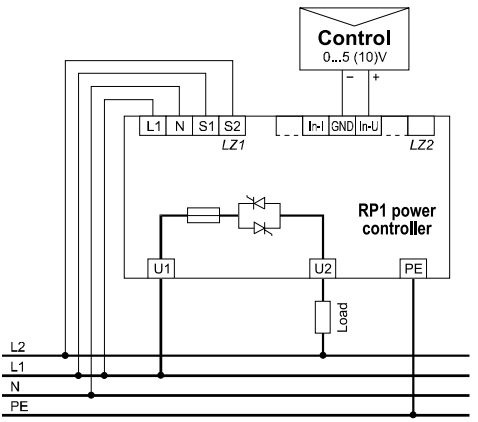

Fig. 12. Connection diagram of load in single-phase system

4.5.3. Load connection in three-phase system

The power control is possible in the three-wire three-phase system using two power controllers.

The presented way of control concerns the on-off control type in the zero-cross of the supplying voltage or the pulse control with the turned soft-start and current limitation off.

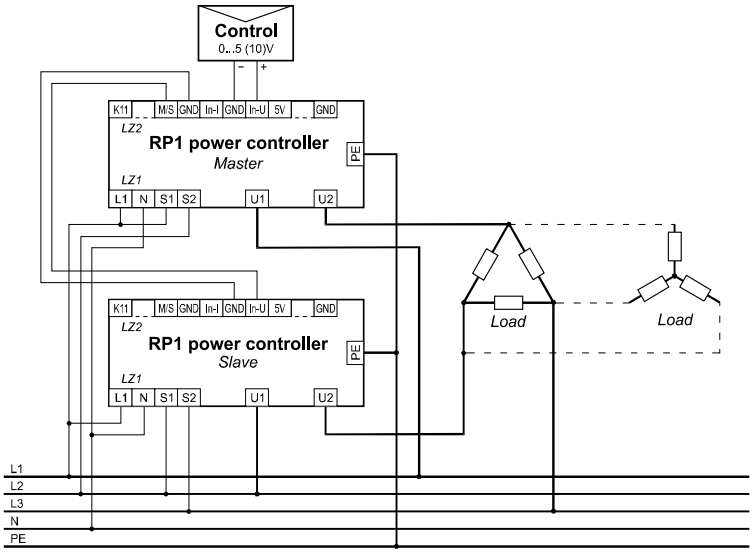

Fig. 13 Connection diagram of a load in three-phase system

5. POWER CONTROLLER SERVICE

„***S-Start***" and „***Limit***" potentiometers must be set on minimum, and „α**max**" and „***Span***" potentiometers, on maximum. In such settings, corresponding functions to them are inactive.

One must carry out successively following operations:

a) install the power controller, according to p.4.1

b) carry out electrical connections, according to p. 4.2., p. 4.4. and p. 4.5.

c) set the controll type and the input control signal, according to p. 4.3.

d) turn on the supply voltage of the load circuit and of the gate triggering system, according p. 4.5.

e) set the current limitation*, according to p. 6.4. set the „***Limit***" potentiometer on maximum. Observing indication of the meter measuring the load current (at the maximal value of the input control signal), set the required current value decreasing the setting on the „***Limit***" potentiometer.

f) set the triggering delay*, according to p.6.5.

g) set the initial value of the triggering angle*, according to p. 6.6. Increase the input control signal up to reach the current value Ir necessary to the motor start, next decrease gradually on the „α***max***" potentiometer, up to turn off, fig. 5. In this case, the control range depends on the set current Ir value to the rated load current In value.

h) set the amplification of the imput line*, according to p. 6.7.

* One can reach experimentally the obtainment of proper settings by means of potentiometers and this should be carried out by a suitably trained personnel.

6. DESCRIPTION OF CONTROL TYPES

6.1. Control of ON-OFF type

At the on-off control, the delivered power to the load is described by the following dependence:

$$P_o = \begin{cases} 0 & \text{for } X_{in} = 0 \\ P_{o\,max} & \text{for } X_{in} = X_{max} \end{cases} \qquad [1]$$

Where: P_o - delivered power to the load
X_{in} - value of the input control signal

The power controller works in the semi-conductor relay mode. The feed of the voltage signal on the control input, p. 4.4.2b, causes the turn of the load current on. Depending on the setting configuration (table 1). The turn on follows immediately or at the nearest actual supply voltage value transition across zero. Runs of signals describing the power controller operation for the control of on-off type are shown on the fig. 14.

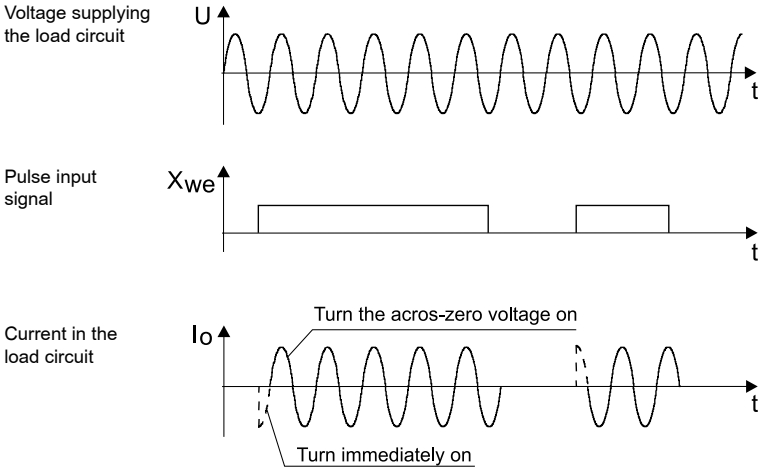

Fig. 14. Control of on-off type, runs of occurring signals (for resistive load).

6.2. Pulse control

Pulse control consists on the change of the pulse-duty factor and the frequency of power Po delivered to the load in function of the analog control signal, at the same time the output current is turned on synchronously with the transition of the supply voltage across zero. Runs of signals are presented on the fig. 15.

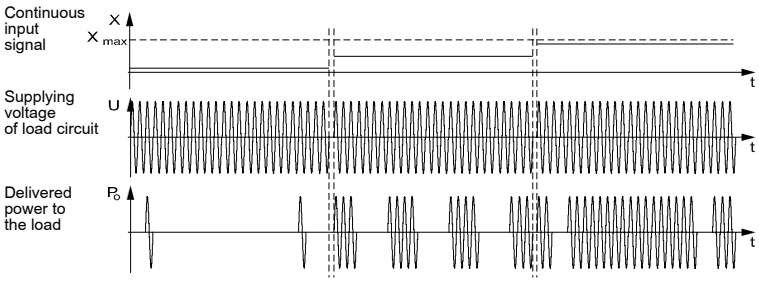

Fig. 15. Pulse control with a variable pulse frequency, runs of occurring signals

The power value in the pulse period according to the formula [2], is defined by the dependence [3]:

$$T = T_s (N_{on} + N_{off}) \qquad [2]$$

$$P_o = P_{o\,max} \frac{N_{on}}{N_{on} + N_{off}} = P_{o\,max} \frac{X_{in}}{X_{in\,max}} \qquad [3]$$

where: T_s - period of the supply voltage,
N_{on} - number of turned periods on,
N_{off} - number of periods off.

The RP1 power controller has following kinds of pulse control:

- Quick cycle, in which for X=1/2 (X_{max} - X_{min}),
  $N_{on} = N_{off} = 10$, however $f_{i\,max} = 2.5$ Hz
- Slow cycle, in which for X=1/2 (X_{max} - X_{min})
  $N_{on} = N_{off} = 100$, however $f_{i\,max} = 0.25$ Hz

Where: X- value of the analog control signal,
$f_{i\,max}$ - maximal pulse frequency

Runs of characteristic quantities for the pulse control are presented on the fig, 16.

The filling factor γ is described by the following dependence:

$$\gamma = \frac{N_{on}}{N_{on} + N_{off}} \qquad [4]$$

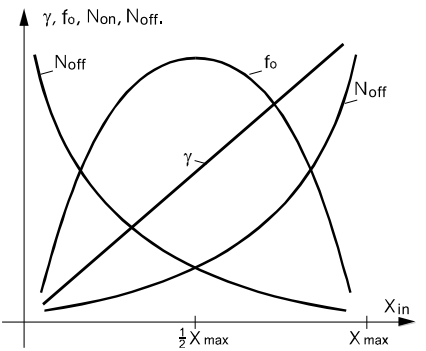

Fig. 16. Runs of characteristic quantities for the pulse control with variable pulse frequency

6.3. Phase control

At phase control, a continuous change of delivered power to the load occurs, it is realised by the change of the load current turn on angle in the function of the analog control signal.

Runs of signals for this kind of control for a resistive load are presented on the fig. 17.

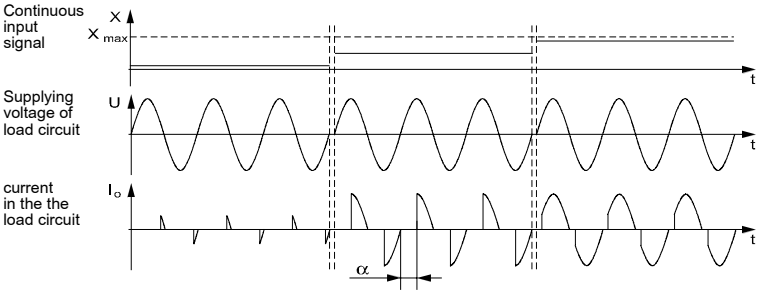

Fig. 17. Phase control, runs of occurring signals

6.4. Limitation of the load current

If the current value in the load circuit exceeds the boundary value set by means of the „***Limit***" potentiometer, then the current limitation operates regardless of the control signal value. It is possible to assign it from an external potentiometer, p. 4.4.3.

The setting of the potentiometer on minimum, means the turn of the current limitation operation off. The maximal value of the current flowing in the load circuit can be set in the full range of the power controller rated value.

The current limitation does not operate for the impulse control or on-off type in the turn-on configuration at across zero voltage. In case of exceeding of the current boundary value, the „***Load***" diode is alight in red.

6.5. Triggering delay of soft-start type

The soft-start function enables a soft accretion of the voltage from zero up to the rated value or value resulting from the current limitation action, in the time set by means of the „***S-Start***" potentiometer.

In the case of phase control or on-off control type in the configuration of immediate turn on, the soft-start time t_{s-s} is controlled in the range from 0 up to 10 s.

In case of the pulse control, this time is equal to:

$$t_{S-S} = \frac{1}{4\, f_{i,\,max}} \qquad [5]$$

The function is not active in case of the on-off control type in the turn-on configuration at zero voltage.

6.6 Control of the initial triggering angle value

During the power controller use for the rotational speed control of a single-phase motor (fan), one can set the current value Ir necessary for the motor start by means of the „α***max***" potentiometer. In this case, the control is in the range from the set value Ir of the current up to the rated value In of the current. The function does not operate in case of the on-off control type, in configuration turned on at zero voltage.

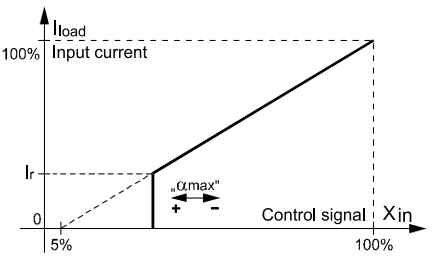

*Fig. 18. Action of the α**max** function*

6.7. Control of the input line amplification

The „***Span***" potentiometer serves to set the amplification of the input line in the control range from 50 up to 100% of the input control signal.

6.8. Check and current signalling in the load circuit

The passage of current in the load circuit is signalled by means of a two-colour „***Load***" diode.

During the normal work, the diode is alight in green, however in the moment of the current limitation action it is alight in red.

6.9. Signalling of the supply correctness

The two-colour „***Control***" diode is alight in green during the normal work, however in the moment of lack of power controller readiness to work, it is alight in red - the power controller is locked.

6.10. Signalling of maximal radiator temperature exceed

The exceed of the 85°C radiator temperature causes the automatic triggering stoppage and display of signalling on the „***Over Temp***" diode, and the PK2 relay turn on, p. 4.4.6b.

The restart of the power controller is possible after the radiator cooling below 60°C and the supply turn on to GTS again, p. 4.5.1.

6.11. Error signalling

The power controller submits the error in following cases:

a) lack of synchronisation,

b) the current flows through the load despite of lack of triggering pulses, e.g. as the result of a thyristor module damage,

c) Lack of current passage in the load circuit, e.g. because of a break in the high-current line (the function begins to operate over 50% of the control signal),

In case of an error statement, the automatic triggering stoppage and display of the „***Error***" diode follows, and the PK2 relay turns on, p. 4.4.6b.

The restart of the power controller is possible after removing damage causes and the renewed supply turn on to GTS, p. 4.5.1.

6.12. Overload protection

The output circuit of the power controller is protected against its overload. The protection is set on 125% of the power controller rated current.

The exceed of this value will cause the action of current limitation.

The function does not operate in case of on-off control type in the configuration turned on at zero voltage.

7. SPECIFICATIONS

7.1 Electrical parameters of the high-current circuit

Table 2

Max. output current	Supply voltage of the load circuit	Max. load power	Lost power in thyristors	Fuse parameters	
				$\int i^2 dt$ at 415 V	Designation and manufacture
25 A	20... 440 V 50/60 Hz	11,0 kW	< 40 W	280 A^2s	**35 (40) A** 35FE - *Bussmann* 6.9 gRB 000 BS 88/40 - *FERRAZ*
40 A	20... 440 V 50/60 Hz	17,6 kW	< 65 W	440 A^2s	**50 A** 50FE - *Bussmann* 6.9 gRB 000 BS 88/50 - *FERRAZ*
70 A	20... 440 V 50/60 Hz	30,8 kW	< 115 W	3600 A^2s	**100 A** 100FE - *Bussmann* 6.9 URB 000 BS 88/100 - *FERRAZ*
125 A	20... 440 V 50/60 Hz	55,0 kW	< 205 W	9600 A^2s	**160 (200) A** 200FEE - *Bussmann* 6.9 URB 000 BS 88/160 - *FERRAZ*

Minimal input current	5% of In range of the power controller output current
Leakage current	≤ 20 mA
Kind of load	resistance or resistance-inductance load (0.5 < cos fi <1) in compliance with the application category AC-51, EN 60947-4-3 (Other applications after agreement with the manufacturer)

7.2 Electrical parameters of the supply and control circuit:

- GTS supply voltage	85...115...135 Va.c. 195...230...253 Va.c.	
- supply voltage frequency	50/60 Hz	
- power consumption	≤ 4.5 VA	
- synchronizing input	20...440 Va.c.	R_{in} = 240 kΩ
- voltage control input	0...5 V	R_{in} = 20 kΩ
	0...10 V	R_{in} = 40 kΩ
- current control input	0(4)...20 mA	R_{in} =125 Ω
- pulse control input	0/4....32 V	R_{in} = 20 kΩ
- STOP signal input	4...32 V/5 mA	
- load-carrying capacity of 5 V output		25 mA
- load-carrying capacity of Io output		5 mA/5 V
- load-carrying capacity of M/S output		5 mA/5 V
- load-carrying capacity of relay outputs		60 mA/350 V, R_{on} =35 Ω U_{izol} = 1500 V rms

7.3. Other parameters:

- working temperature	0... 40°C
- storage temperature	- 25... 55°C
- humidity	< 90% (without condensation)
- working position	vertical
- dimensions:	
- version without fan	135 x 201 x 199 mm
- version with fan*	135 x 231 x 199 mm
- weight	4.5 (5.0)* kg

7.4. Safety requirements:

- maximal phase-to-earth working voltage	320 V, for power and supply circuits 50 V, for other circuits
- pollution degree	2
- installation category	III
- protection degree from terminal side	IP 10, acc. to EN 60529
- housing protection degree	IP 20, acc. to EN 60529

7.5. Electromagnetic compatibility:

- immunity noise	EN 60947-4-3
- emission noise	EN 60947-4-3

The RP1 power controller fulfils requirements of the EN 60947-4-3 standard.

NOTE: In case of phase control, the power controller fulfils requirements of the electromagnetic compatibility in relation to the interference emission, only when working near the of the supply voltage through zero.

8. ORDERING CODES

Table 3

Power controller RP1			**X**	**X**	**X**
Current range:					
maximal output current	25 A	load voltage: 24...400 V a.c. 50/60 Hz	**1**		
maximal output current	40 A		**2**		
maximal output current	70 A		**3**		
maximal output current	125 A*		**4**		
Gate triggering system system (GTS):					
supply voltage	85...115...135 V a.c.			**1**	
supply voltage	195...230...253 V a.c.			**2**	
Acceptance tests:					
without an additional quality inspection certificate					**8**
with an extra quality inspection certificate					**7**
other requirements					**X**

* The RP1-4xx version has a buil-in fun.

ORDERING EXAMPLE

The code: **RP1 3 2 0** means:

RP1 - power controller of RP1 type,
3 - maximal output current: 70 A, for the range of voltages: 24...400 V supplying the load circuit,
2 - voltage supplying the gate triggering system: 230 V,
8 - without an additional quality inspection certificate.

9. MAINTENANCE AND WARRANTY

The RP1 power controller does not require any special periodical maintenance. In case of some incorrect operations:

After the dispatch date and within the period stated in the warranty card

One should return the power controller to the Manufacturer's Quality Inspection Dept. If the device has been used in compliance with the instructions, the Manufacturer warrants to repair it free of charge. The disassembling of the housing causes the cancellation of the granted warranty.

After the warranty period:

One should send the device to repair it in an authorized service workshop. Spare parts are available for the period of five years from the date of purchase.

Our policy is one of continuous improvement and we reserve the right to make changes in design and specifications of any products as engineering advances or necessity requires and revise the above specifications without notice.

LUMEL S.A.
ul. Sulechowska 1, 65-022 Zielona Góra, POLAND
tel.: +48 68 45 75 100, fax +48 68 45 75 508
www.lumel.com.pl

Export department:
tel.: (+48 68) 45 75 139, 45 75 233, 45 75 321, 45 75 386
fax.: (+48 68) 32 54 091
e-mail: export@lumel.com.pl

RP1-09(17.05.2010)