EUROTEC
TECNOLOGIE IMPIANTISTICHE - AUTOMAZIONE - TELECONTROLLO

LUMEL
EVERYTHING COUNTS

TRANSDUCER OF 1-PHASE POWER NETWORK PARAMETERS

P30P

USER'S MANUAL

CE

Contents

1. Application....4
2. Transducer set....6
3. Basic requirements, operational safety....6
4. Installation....7
4.1. Mounting....7
4.2. External connection diagrams....8
5. Service....10
5.1. Description of P30P transducer's frontal plate....10
5.2. Power-on messages....11
5.3. Functions of the buttons....11
5.3.1. Functions of single buttons....11
5.3.2. Functions of button combinations....12
5.3.3. Programming matrix....14
5.4. Programming parameters of the transducer....14
5.4.1. Type of selected parameter value change....16
5.4.2. Changing the floating-point values....17
5.4.3. Programmable parameters of the transducer....17
5.5. Functions of the transducer....29
5.5.1. Measuring input....29
5.5.1.1 Averaging time of instantaneous values....29
5.5.1.2 Mean values, synchronized with the clock....29
5.5.1.3 Maximum and minimum values displayed....29
5.5.2. Analog outputs....29
5.5.2.1. Individual characteristic of analog outputs....30
5.5.2.2 Analog outputs overrun support....31
5.5.3 Alarm and power outputs....34
5.5.4 LCD display....34
5.5.4.1 Displayed values....36
5.5.4.2 Main displayed value....38
5.5.4.3 Service messages....38
5.5.5 Saving and reading transducer configuration file....38
5.5.5.1 Saving transducer configuration file....39
5.5.5.2 Reading transducer configuration file....39
5.6. Default settings....39
5.7. Software upgrades....42
5.8. Measuring values archiving....43
5.8.1 Transducer memory structure....43
5.8.2 Internal memory....44
5.8.2.1 Structure of the record 45
5.8.2.2. Acquisition of archived data from the internal memory....45
5.8.3 Archiving configuration....46
5.8.4 Memory card or internal memory file system (optional)....47
5.8.5 Archive files structure....49
5.9. RS-485 interface....50
5.9.1 Connection of the serial interface....50
5.9.2 Description of the MODBUS protocol implementation....51
5.9.3 Description of the implemented functions....51
5.9.4 Interface RS-485 Master mode....55
5.9.5 Interface RS-485 Monitor mode....56
5.9.6 Map of the registers....57
5.9.7 Registers for writing and readout....58
5.9.8 Registers for readout....72
5.10. Ethernet interface 10/100-BASE-T....80
5.10.1 Connecting 10/100-BASE-T interface....81
5.10.2 Web Server....82
5.10.2.1. General view....83
5.10.2.2. Web user selection....83

5.10.3 FTP Server....84
5.10.3.1. FTP user selection....85
5.10.4 Modbus TCP/IP....85
6. Accessories....86
7. Error codes....86
8. Technical data....87
12. Ordering code....92

1. Application

Programmable transducer P30P is suited for single-phase power line parameters measurement and converting them into standard d.c current or d.c. voltage signal. Output signal is galvanically isolated from input signal and power signal. Transducer uses 2x8 characters LCD.

Characteristics of P30P Transducer:

- conversion of measured values into an output signal on the base of the individual linear characteristic,
- one or two relay alarms with the n/o contact operating in 6 modes,
- 24 VDC 30 mA auxiliary power turned on/off according to program (optional)
- signaling of the set alarm values tripping,
- programming of alarm output and analog outputs reacting to the selected input value,
- real time clock with the clock power support function in case of the transducer power failure,
- input signal registration in the internal memory and SD/SDHC cards within the programmed time intervals (optional),
- internal memory with 534336 record capacity,
- automatic decimal point set,
- set parameters display,
- password protection for the input parameters,
- compatibility with RS-485 interface with MODBUS protocol, in RTU mode,
- measurement averaging time programming,
- SD/SDHC card use – FAT and FAT32 system compatibility,
- Master RS-485 mode – 1 device query,
- Ethernet interface10/100 BASE-T (optional)
  - protocol: Modbus TCP/IP, HTTP, FTP,
  - services: web server, FTP server, DHCP client

The values measured and calculated by the transducer:

⇒ phase voltage
⇒ current
⇒ active power
⇒ reactive power
⇒ apparent power

⇒ active power factor
⇒ reactive power factor (cosφ)
⇒ active power averaged (e.g. 15 min)
⇒ reactive power averaged (e.g. 15 min)
⇒ current averaged (e.g. 15 min)
⇒ value of the cosine of the angle φ
⇒ active power:
- import:
- export;

⇒ reactive power:
- capacitve;
- inductive;

⇒ apparent energy
⇒ frequency
⇒ time
⇒ THD U, THD I
⇒ minimum and maximum values for:
- phase voltage;
- current;
- active power;
- reactive power;
- apparent power;
- active power factor;
- reactive power factor;
- frequency;
- mean active power;
- mean apparent power;
- mean current.

Transducer allows for the use of external transmission and measurement conversion included in the measurement and calculation of all measured values. Value upgrade time does not exceed 1 second. All values and configuration parameters are available through RS-485 and Ethernet (Modbus protocol) (option).

Fig. 1 Appearance of P30P transducer different versions.

2. Transducer set

- P30P Transducer 1 pc
- user's manual 1 pc
- warranty card 1 pc
- plug with the screw terminals 2 pc

3. Basic requirements, operational safety

In the security scope, the transducer meets the requirements of the EN 61010-1 standard.

Comments concerning safety

- Assembly and installation of the electrical connections should conducted only by people authorised to perform assembly of electric devices.
- Always check the connections before turning the transducer on.
- The transducer is designed to installation and usage in the industrial electromagnetic environment.
- A switch or a circuit-breaker should be installed in the building or facility. It should be located near the device, easily accessible by the operator, and suitably marked.
- Removal of the transducer housing during the warranty period voids the warranty.

4. Installation

4.1. Mounting

The P30 transducer are designed for installation on a 35 mm rail acc. to EN 60715. Overall dimensions and mounting is shown in Figure 2.

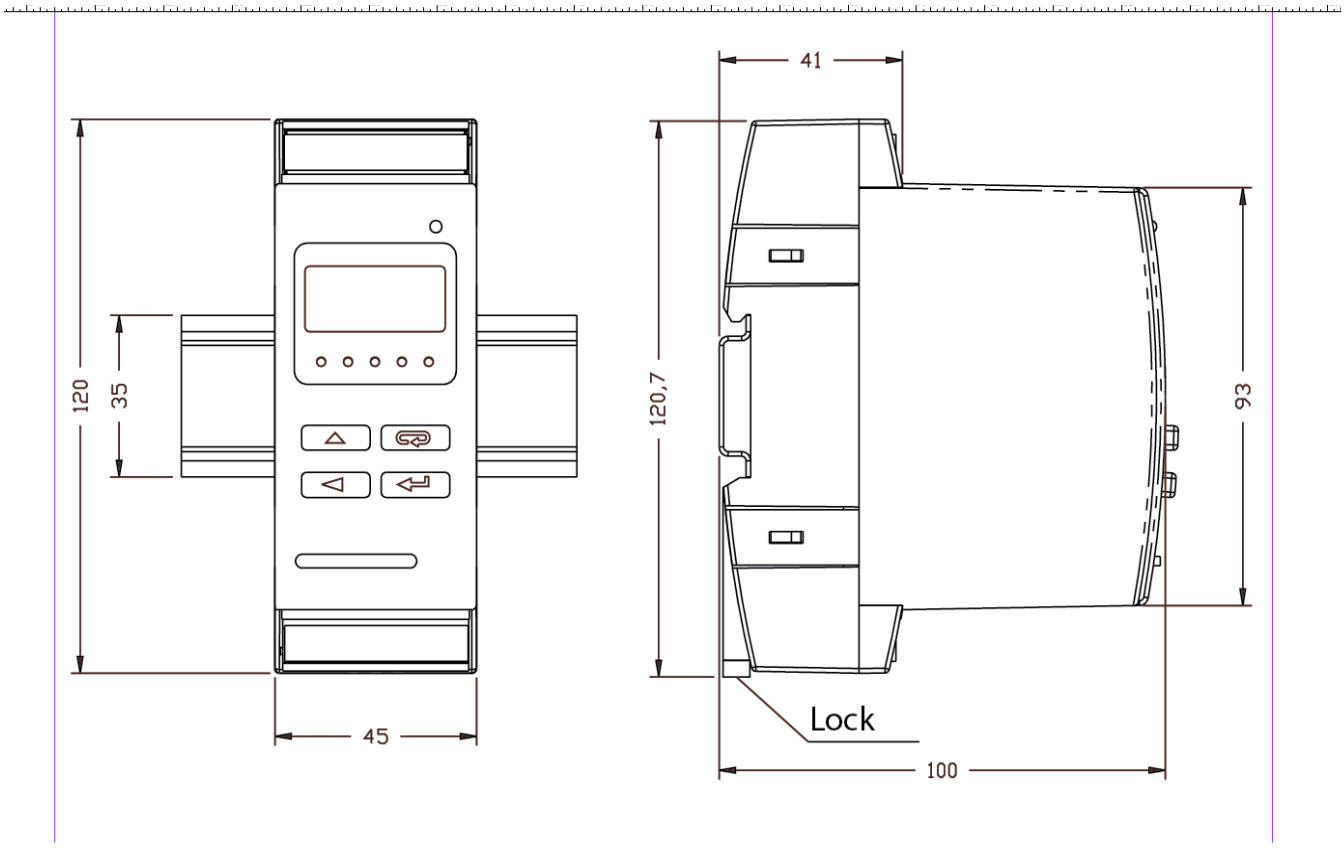

Fig. 2 Overall dimensions and mounting of the transducer.

The output signals are galvanically isolated from the input signals and power supply. The meter housing is made of plastic. On the outside two clamping strips that can accommodate cables up to 2.5 mm^2 in diameter.

4.2. External connection diagrams

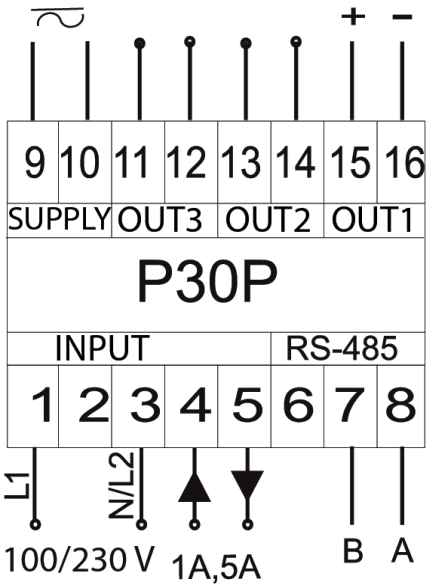

SUPPLY - supply
OUT3 - output no.3
(alarm or supplying output 24 V)
OUT2 - output no.2
(alarm or analog output 24 V)
OUT1 - main analog output no.1
INPUT - measuring input
RS-485 - interface RS-485

P30P-XXX11XXXXX

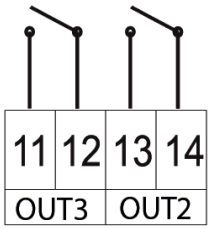

OUT2 - alarm 1
OUT3- alarm 2

P30P-XXX21XXXXX

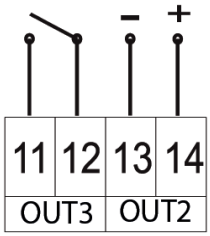

OUT2 - analog output 2
0/4...20 mA
OUT3- Alarm 2

P30P-XXX12XXXXX

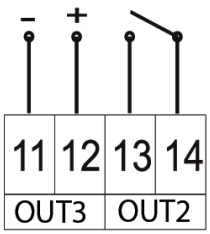

OUT2 - alarm 1
OUT3- supplying output
24 V d.c., 30 mA

P30P-XXX22XXXXX

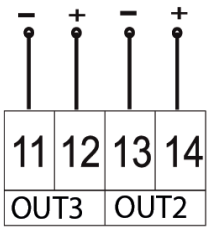

OUT2 - analog output 2
0/4...20 mA
OUT3- supplying output
24 V d.c., 30 mA

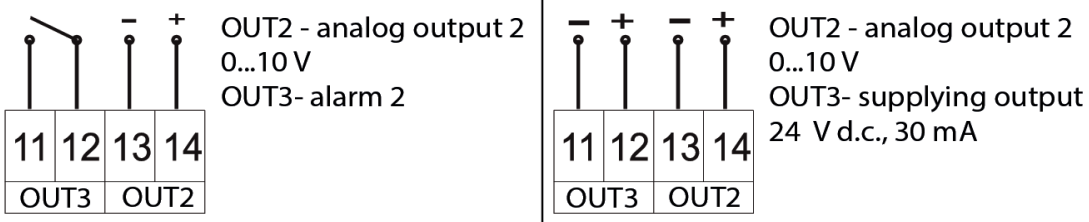

External signals input connection diagram:

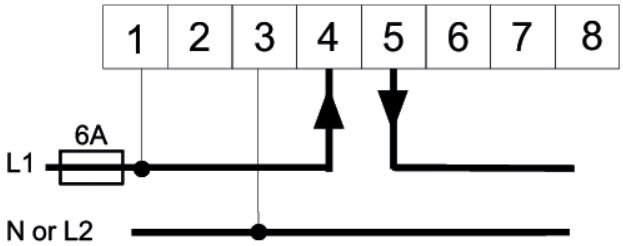

Direct measurement

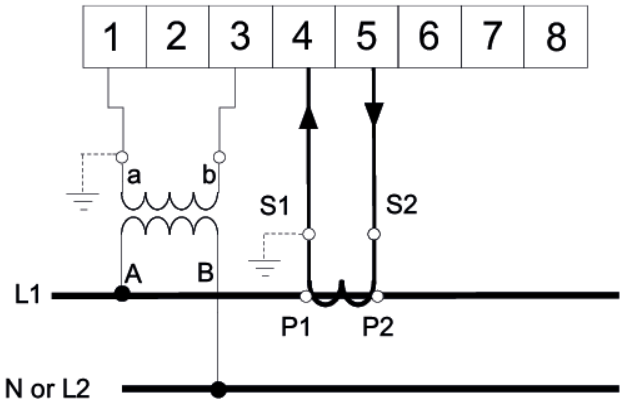

Indirect measurement

Fig.3 Wiring diagram of the P30P transducer

5. Service

5.1. Description of P30P transducer's frontal plate

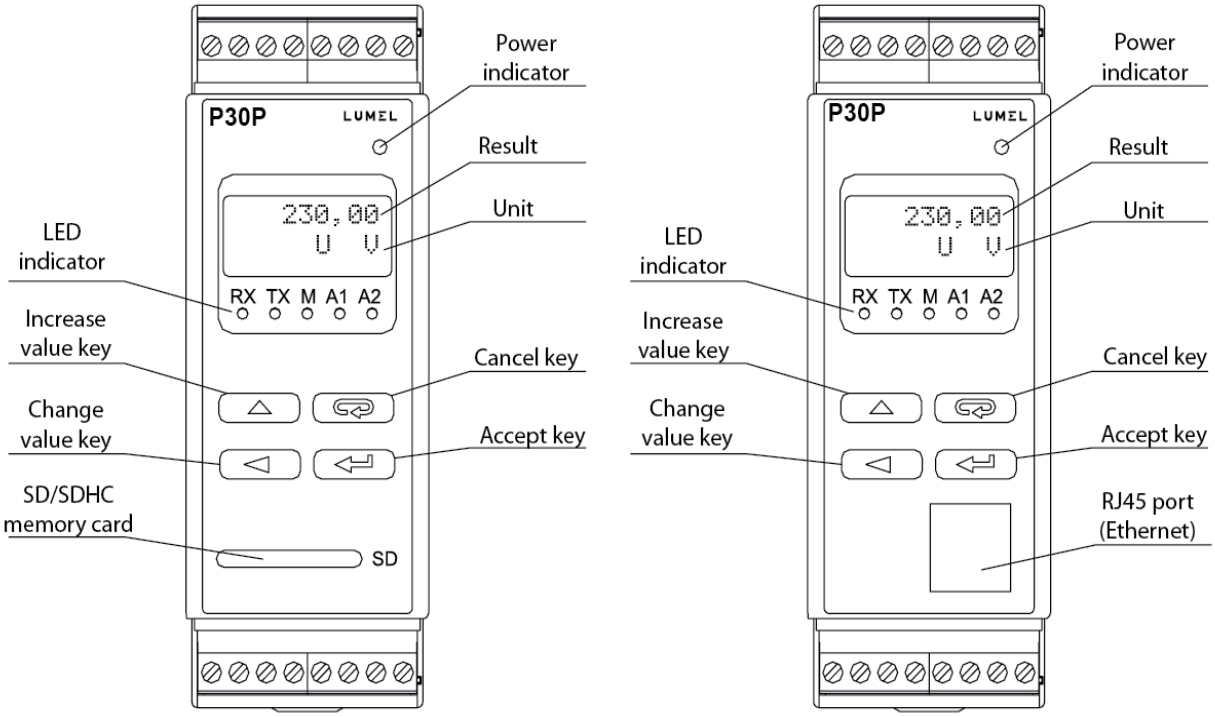

Fig.4 Description of the transducer's frontal plate

Note: Memory card (optional) should be inserted into the transducer with contacts on the bottom side.

Description of LED indicator:

RX – green LED - indicator of data receiving on RS-485 link

TX – yellow LED - indicator of data transmission on RS-485 link

M – red LED – indicates reaching the limit of the internal archive memory and saving the data on the SD/SDHC card - when the internal memory is 95% full, LED in constantly on, if the transducer is using a memory card, LED is pulsating during the saving process until it is finished.

A1 – red LED – indicates engaging the first alarm

A2 – red LED – indicates engaging the second alarm or 24VDC power.

Power indicator – green LED

5.2. Power-on messages

After connecting the external signals and turning the power on accompanied by turning the green LED (power indicator) on, transducer displays the type, current software version and the serial number. If the transducer is equipped with Ethernet interface (P30P-XX2XXXXXXX), then after displaying the serial no., the device displays also the IP address saved in memory or received from DHCP server.

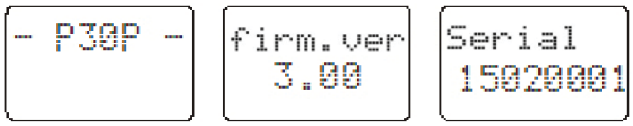

Fig.5 Starting messages of the transducer not equipped with Ethernet interface

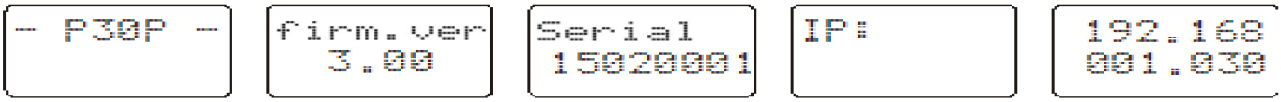

Fig. 6 Starting messages of the transducer equipped with Ethernet interface

The transducer automatically switches to the operating mode of measurement and processing the analog output signal after approx. 3 seconds. Measured value is displayed in the upper line of the display, the additional information is displayed in the lower line, see 5.5.4).

LED display shows the RS-485 transmission status, internal memory usage and alarm status. Ethernet services (WWW server, FTP server, Modbus TCP/IP) are started for transducers equipped with Ethernet interface.

5.3. Functions of the buttons

5.3.1. Functions of single buttons

[⏎] - confirm button

- entering the programming mode (hold the button for at least 3 seconds),
- menu item selection – level selection,
- entering the parameter value change mode,
- accepting the altered parameter value,
- change of content displayed on the bottom line of the display
- turning the transducer on and holding down the button - entering into software update mode via RS-485 interface, the link parameters: baud rate 9600 bit/s, 8N2 mode.

[△] - increase value button

- change of the displayed value,
- navigation within selected level,
- change of the selected parameter value – value increase,

- digit change button

- change of the displayed value
- moving to the parameter group level,
- navigation within selected level
- selected parameter value change – moving to subsequent number
- turning the transducer on and holding down the button - entering into software update mode via RS-485 interface, the link parameters: baud rate 115200 bit/s, 8N2 mode.

- cancel button

- enters the transducer parameter display mode (hold the button for at least 3 seconds),
- quits the transducer parameter display menu
- change of content displayed on the bottom line of the display
- cancels the parameter change
- forced exit from the programming mode (hold the button for at least 3 seconds),
- turns the transducer with the button pressed – forces loading transducer configuration from the P30P_PAR.CON file saved to the external SD/SDHC card or internal file system memory (depends on the version).

5.3.2. Functions of button combinations

- holding down for approx. 3 second

- deletes alarm signalization; this operation works only with support function turned on;

- holding down for approx. 1 second

- displays maximum of the currently displayed value

- holding down for approx. 1 second

- displays minimum of the currently displayed value

- holding down for approx. 1 second

- unmounts the SD/SDHC card allowing it to be safely removed – for the transducers with external SD/SDHC card slot

[⇦] [◁] - holding down for approx. 1 second

- forces the rewriting of the archive from internal memory to the SD/SDHC card – for the transducers with external SD/SDHC card slot
- overrides the rewriting of the archive from internal memory to file system memory – for the transducers with Ethernet interface; this operation allows for the loading the files with current archive data from transducer via FTP protocol

[△] [◁] - holding down for approx. 3 seconds, deleting extremal values

Pressing and holding the button for approx. 3 seconds [⇦] causes exiting to the programming matrix. The programming matrix can be protected by an access code.

5.3.3. Programming matrix

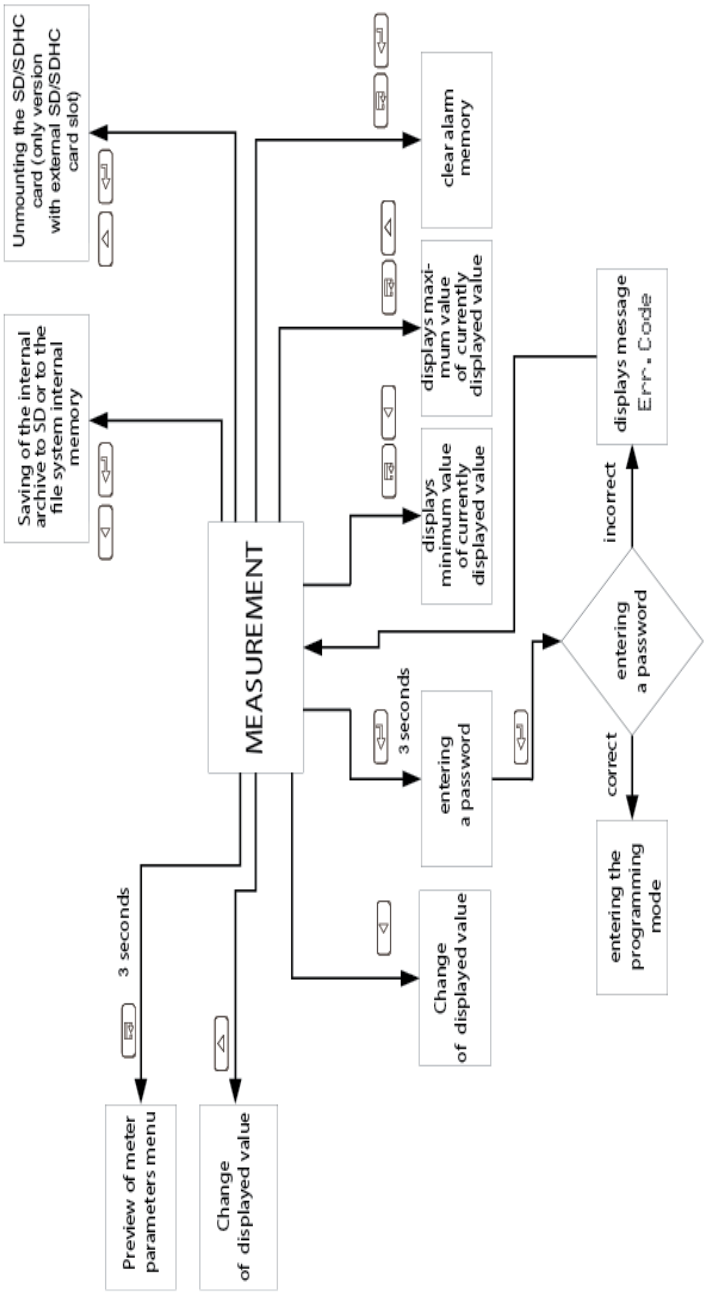

Fig. 7 P30P Transducer service algorithm

5.4. Programming parameters of the transducer

Pressing and holding down the button ⏎ for approx. 3 seconds allows to enter to the programming matrix. If the output is password-protected, a password entry message will be displayed. If the entered password is incorrect, a following message appears: `Invalid Code`. Entering a valid password starts programming matrix. The Fig. 8. shows the transition matrix in the programming mode. Buttons allow the selection of the menu level and moving through the sublevel parameters △ or

[◁]. Parameter symbol is displayed in the upper display line, the parameter itself is displayed in the lower line. To edit a given parameter, press the following button: [⏎]. To cancel the parameter change, press the following button: [⇦]. To exit the programming matrix and enter the measurement mode, press and hold the following button: [⇦]. If the transducer is left in the parameter programming mode, after 30 seconds it will exit programming mode and start to display the displayed value.

Settings Input Parameters of the main input	Inp. Type Current measurement range selection 1A / 5A	Meas.Mod Results interpretation mode selection	DemandTm Method of averaging the P, S and I averages.	Averag. Instantaneous values averaging method.	Synchro. Measurement synchronization type selection (acc. to U or I)	I direct Software current reversal ability	Clear En Energy counters erasing	Reset AV Restart of counting the averaged values	TempMeas Enabling a temperature measurement	Primar.U Voltage transformer primary voltage
	Second.U Voltage transformer secondary voltage	Primar.I Current transformer primary voltage	Second.I Current transformer secondary voltage							
Settings Display Display parameters	Bcklight Time of a display panel illumination	Bckl.Int Intensity of LCD display panel illumination	Disp.Reg Register number displayed on the bottom line of the display	MainDisp Main displayed value	MainUnit Main displayed value unit	Ind.Ch.A Coefficient „A" of the individual characteristic	Ind.Ch.B Coefficient „B" of the individual characteristic			
Settings Alarm 1 Alarm 1 parameters	Param.A1 Input value type for alarm 1	Type A1 Alarm type 1	OverLoA1 Alarm 1 lower limit	OverHiA1 Alarm 1 upper limit	DlyOnA1 Alarm 1 activation delay	DlyOffA1 Alarm 1 deactivation delay	OnLockA1 Alarm 1 re-activation delay	SgKeepA1 Alarm 1 signalization latch		
Settings Alarm 2 Alarm 2 parameters	Param.A2 Input value type for alarm 1	Type A2 Alarm type 2	OverLoA2 Alarm 2 lower limit	OverHiA2 Alarm 2 upper limit	DlyOnA2 Alarm 2 activation delay	DlyOffA2 Alarm 2 deactivation delay	OnLockA2 Alarm 2 re-activation delay	SgKeepA2 Alarm 2 signalization latch		
Settings Output Output parameters (analog output no2 parameters available only when the transducer is equipped with an additional output)	ParamAn1 Control value of analog output 1 type	AnIn Lo1 Input 1 lower limit	AnIn Hi1 Input 1 upper limit	AnOutLo1 Output 1 lower limit	AnOutHi1 Output 1 upper limit	OverSer1 Enabling an overrun of output 1	Parameters available only when the OverSer1 option is on			
							OvOutLo1 Output 1 lower limit overrun	OvOutHi1 Output 1 upper limit overrun	OvrOutL1 Output 1 expected value when the lower limit is exceeded	OvrOutH1 Output 1 expected value when the upper limit is exceeded
	ParamAn2 Control value of analog output 2 type	AnIn Lo2 Input 2 lower limit	AnIn Hi2 Input 2 upper limit	AnOutLo2 Output 2 lower limit	AnOutHi2 Output 2 upper limit	OverSer2 Enabling an overrun of output 2	Parameters available only when the OverSer2 option is on			
							OvOutLo2 Output 2 lower limit overrun	OvOutHi2 Output 2 upper limit overrun	OvrOutL2 Output 2 expected value when the lower limit is exceeded	OvrOutH2 Output 2 expected value when the upper limit is exceeded
Settings Mbus 485 RS-485 interface	Address Device address	ModeUnit Frame type	BaudRate Baud rate	Base.Reg Base register	No.ofVal Number of the queried	ValType Type of the queried	Interv. Query period	AnswTime Max. response	Mode Interface RS-485 operating mode	Mast.Fun Selection of the function type for the

parameters				number (Master mode)	values (Master mode)	values (Master mode)	(Master mode)	time (Master mode)		interface operation in Master mode
	No.OfErr Allowed number of the failed queries for RS-485 Master mode									
Settings Archive Archiving parameters	Arch.Val Archived values selection	Param.Ar Value type triggerining conditional archiving	Ar.Mode Archiving type	OverLoAr Archiving lower limit	OverHiAr Archiving upper limit	Ar. Time Archiving period	Ar.Erase Deleting an internal archive	Rec.ToSD Override allowing for copying of the internal archive to SD/SDHC card	Param.SD The percentage of the internal archive space used which triggers automatic writing on SD/SDHC card	
Settings Support service parameters	Fabr.Par Enter standard parameters.	Security Enter a password	Time Setting the current time	Date Setting the current date	AutoTime Automatic DST and inversely	DispTest LCD display and LED indicators test	Language Menu language selection	SaveFile Override allowing for saving the configuratio n file to SD/SDHC card		

Settings Ethernet Ethernet interface para-meters	DHCP Enable/ disable DHCP client	addrIP32 B3,B2 byte of IP address (IPv4)	addrIP10 B1,B0 byte of IP address (IPv4)	Mask 32 B3,B2 byte of the subnet mask	Mask10 B1,B0 byte of the subnet mask	gate 32 B3,B2 byte of the default gateway address	Gate 10 B1,B0 byte of the default gateway address	MAC 54 B5,B4 byte of the transducer MAC address	MAC 32 B3,B2 byte of the transducer MAC address	MAC 10 B1,B0 byte of the transducer MAC address
		acquired from DHCP or entered manually when DHCP is off, format: B3.B2.B1.B0						format : B5:B4:B3:B2:B1:B0		
	AddrmTCP Device address for Modbus TCP/IP service	PortMbus Modbus TCP/IP port	TimeMbus Port closing time of Modbus TCP/IP service port if idle [s]	no.c.TCP The number of allowed simultaneou s connections to Modbus TCP/IP service	p.comFTP FTP server command port	portFTP FTP server data port	portHTTP Web server port number	BaudRate Baud rate	EthStdPa Setting the new parameters of Ethernet interface	ReInitEt Executing the changes in the Ethernet interface parameters

Fig.8 Programming matrix

5.4.1. Type of selected parameter value change

To increase the value of selected parameter, press the following button: [△]. Pressing the button once increases the value by 1. Increasing the value by one when 9 is displayed, changes this number to 0. Number is changed after the following button is pressed: [◁]. Pressing the button [◁] during the most important number allows to change the number sign after the following button is pressed: [△].

To accept the set parameter, press the following button: [↵]. The parameter will be saved. Pressing the following button: [⇐] while changing the parameter value will cancel the writing.

5.4.2. Changing the floating-point values

The change is done in 3 stages (to move to a next stage press the following button:).

- setting the decimal point (00000., 0000.0, 000.00, 00.000, 0.0000); button moves the point to the left, while button moves point to the right. Pressing the following button: while changing the parameter value will cancel the writing.
- setting the value from -99999…99999 ranges for the normal values;
- setting the order of magnitude x1, x10^3, x10^6, x10^9 (symbols „k", „M" and „G" for orders of 10^3, 10^6, 10^9 respectively are displayed)

5.4.3. Programmable parameters of the transducer

The following table shows the programmable parameters and the range of their values.

Table 1

Settings Input				
Parameter symbol	Description	Range of changes		
Input type	Input current range selection	230V, 5A	Input range 5A	(version P30P -2xxxxxxxxx)
		230V, 1A	Input range 1A	
		100V, 1A	Input range 5A	(version P30P -1xxxxxxxxx)
		100V, 1A	Input range 1A	
Measurement type	Measurement result interpretation method	1 phase	1-phase measuring system	
		3 phase	Simulation of a symmetric 3-phase system (power and energy values multiplied by 3)	
DemandTm	Synchronization of the average active power, average apparent power and average current	Mov.Wind	15-minute stepping window, no clock synchronization	
		15 min	Measurement synchronized with the clock, aggregation time of 15 minutes	
		30 min	Measurement synchronized with the clock, aggregation time of 30 minutes	
		60 min	Measurement synchronized with the clock, aggregation time of 60 minutes	
Averag.	Instantaneous values averaging	no	No averaging, instantaneous value is synchronized with minimal measurement quantum	
		200 ms	Averaging over time 200 ms	
		500 ms	Averaging over time 500 ms	
		1s	Averaging over time 1 s	

		3s	Averaging over time 3 s
		5s	Averaging over time 5 s
		10s	Averaging over time 10 s
Synchro.	Measurement synchronization method selection (measurements of system parameters is synchronized with the current or voltage waveform)	Voltage	Synchronization with voltage waveform
		Current	Synchronization with current waveform (with no voltage signal connected or voltage is lower than the synchronization threshold)
I direct	Change of the current direction for the current passing through the measurement circuit	Normal.	According to the connection diagram
		Reversed	Opposite to the connection diagram
Clear En	Energy counters erasing	no	No change
		Active +	Reset of active import energy counter (positive)
		Active -	Reset of active import energy counter (negative)
		Reactive L	Reset of reactive inductive energy counter
		Reactive C	Reset of reactive capacity energy counter
		Apparent	Reset of apparent energy counter
		All	Reset of all energy counters
Reset AV	Restart of counting the averaged values	Yes	restart
		No	no change
TempMeas	Enabling a temperature measurement	No	No temperature measurement
		RS-485	Using the values of the 8000 range as the temperature readout
Primar.U	Voltage transformer primary voltage	0...99999G	
Second.U	Voltage transformer secondary voltage	0...99999G	
Primar.I	Current transformer primary voltage	0...99999G	
Second.I	Current transformer secondary voltage	0...99999G	

Table 2

Settings Display		
Parameter symbol	Description	Range of changes
Bck light	Time of a display panel illumination	On - permanently switched on Off - permanently switched off 1 - switched on for X seconds 2 ... 60
Bck l. Int	Intensity of LCD display panel illumination	10% - LCD display panel illumination, 10% of max. illumination 20% - LCD display panel illumination, 20% of max. illumination ... 100% - LCD display panel illumination, 100% of max. illumination
Disp. Reg	Register number displayed on the bottom line of the display	0...65535
MainDisp	Main displayed value selection	Off, U, I, P, Q, S, PF, tg, F, PDM, SDM, IDM, cos, THD U, THD I, Temper.
MainUnit	Main displayed value unit selection	U V, I A, P W, ... ϕ °
Ind. Ch. A	Coefficient „A” of the individual characteristic	-99999...99999G
Ind. Ch. B	Coefficient „B” of the individual characteristic	-99999...99999G

Table 3

Settings Alarm 1, Alarm 2			
Parameter symbol	Description	Range of changes	
Param. A1 Param. A2	Input value type controlling the alarm	U	RMS voltage
		I	RMS current
		P	Active power
		Q	Reactive power
		S	Apparent power
		PF	Active power factor (P/S)
		tg	Factor tgΦ (Q/P)
		F	Frequency
		PDM	Active power averaged
		SDM	Apparent power averaged

		IDM	Current averaged
		cos	Cosine of the angle between U and I
		THD U	Harmonic distortion factor of voltage
		THD I	Harmonic distortion factor of current
		Temper.	temperature
		2nd Val	second value displayed
		Time	time
Type A1 Type A2	Alarm type. Fig. 12 shows the rendering of the alarm types.	n-on	normal (change from 0 to 1).
		n-off	normal (change from 1 to 0).
		on	on
		off	off
		h_on	manual off; alarm output is permanently switched on until change of the alarm type.
		h_off	manual off; alarm output is permanently switched on until change of the alarm type.
OverLoA1 OverLoA2	Alarm lower limit	-99999G...99999G	
OverHiA1 OverHiA2	Alarm upper limit	-99999G...99999G	
DlyOnA1 DlyOnA2	Alarm activation delay (s)	0...900	
DlyOffA1 DlyOffA2	Alarm deactivation delay (s)	0...900	
OnLockA1 OnLockA2	Alarm re-activation delay (s)	0...900	
SgKeepA1 SgKeepA2	Alarm signalization latch after the alarm is off (alarm memory)	Off	no alarm signalization latch
		On	alarm signal support by the pulsating A1 and A2 LEDs after the alarm sound ends

Table 4

Settings Display		
Parameter symbol	Description	Range of changes
Bcklight	Time of a display panel illumination	On - permanently switched on Off - permanently switched off 1 - switched on for X seconds 2 ... 60
Bckl.Int	Intensity of LCD display panel illumination	10% - LCD display panel illumination, 10% of max. illumination 20% - LCD display panel illumination, 20% of max. illumination ... 100% - LCD display panel illumination, 100% of max. illumination
Disp.Reg	Register number displayed on the bottom line of the display	0...65535

Table 5

Settings Alarm 1, Alarm 2			
Parameter symbol	Description	Range of changes	
Param.A1 Param.A2	Input value type controlling the alarm	U	RMS voltage
		I	RMS current
		P	Active power
		Q	Reactive power
		S	Apparent power
		PF	Active power factor (P/S)
		tg	Factor tgΦ (Q/P)
		F	Frequency
		PDM	Active power averaged
		SDM	Apparent power averaged
		IDM	Current averaged
		cos	Cosine of the angle between U and I
		THD U	Harmonic distortion factor of voltage
		THD I	Harmonic distortion factor of current
		Temper.	temperature
		2nd Val	second value displayed
		Time	time
Type A1 Type A2	Alarm type. Fig. 12 shows the rendering of the alarm types.	n-on	normal (change from 0 to 1).
		n-off	normal (change from 1 to 0).
		on	on
		off	off
		h_on	manual off; alarm output is permanently switched on until change of the alarm type.
		h_off	manual off; alarm output is permanently switched on until change of the alarm type.
OverLoA1 OverLoA2	Alarm lower limit	-99999G...99999G	
OverHiA1 OverHiA2	Alarm upper limit	-99999G...99999G	
DlyOnA1 DlyOnA2	Alarm activation delay (s)	0...900	
DlyOffA1 DlyOffA2	Alarm deactivation delay (s)	0...900	
OnLockA1 OnLockA2	Alarm re-activation delay (s)	0...900	
SgKeepA1 SgKeepA2	Alarm signalization latch after the alarm is off (alarm memory)	off	no alarm signalization latch
		on	alarm signal support by the pulsating A1 and A2 LEDs after the alarm sound ends

Table 6

Settings Output			
Parameter symbol	Description	Range of changes	
Param.A1	Input value type controlling the analog output	U	voltage
		I	current
		P	Active power
		Q	Reactive power
		S	Apparent power
		PF	Active power factor (P/S)
		tg	tgΦ factor (Q/P)
		F	Frequency
		PDM	Active power averaged
		SDM	Apparent power averaged
		IDM	Current averaged
		cos	Cosine of the angle between U and I
		THD U	Harmonic distortion factor of voltage
		THD I	Harmonic distortion factor of current
		Temper.	temperature
		2nd Val	second value displayed
		time	time
AnIn Lo1	Individual characteristic of analog output 1- lower limit of the input	-99999G...99999G	
AnIn Hi1	Individual characteristic of analog output 1- upper limit of the input	-99999G...99999G	
AnOutLo1	Individual characteristic of analog output 1- lower limit of the output	0...24.000	
AnOutHi1	Individual characteristic of analog output 1- upper limit of the output	0...24.000	
OverSer1	Enabling an overrun of the analog output 1	off	Overrun support disabled
		on	Overrun support enabled
OvOutLo1	Lower limit overrun of output 1 (value x1000)	0...24000	
OvOutHi1	Upper limit overrun of output 1 (value x1000)	0...24000	
OvrOutL1	Output expected value when the lower limit is exceeded (value x1000)	0...24000	
OvrOutH1	Output expected value when the upper limit is exceeded (value x1000)	0...24000	
Param.A2 OvrOutH2	Parameters as for A1; available only for the transducers with additional no. 2 output		

Table 7

Settings Mbus 485			
Parameter symbol	Description	Range of changes	
Address	MODBUS network address. Entering the 0 value turns the interface off; if the RS-485 interface operates in the Master mode, it is an address of the queried device.	0...247	
ModeUnit	The transmission frame type of RS-485 interface	r8n2 r8e1 r8o1 r8n1	
BaudRate	RS-485 interface baud rate	4800	4800 bit/s
		9600	9600 bit/s
		19200	19200 bit/s
		38400	38400 bit/s
		57600	57600 bit/s
		115200	115200 bit/s
		230400	230400 bit/s
		256000	256000 bit/s
Base.Reg	Number of the base register queried/monitored in the Master or Monitor mode of RS-485 interface	0 ...65536	
No.ofVal	Number of values queried in Master mode or monitored in Monitor mode	0 ...50	
ValType	Type of the values queried/monitored by RS-485 interface	char 8	Register type *char* (8 bits signed)
		uchar 8	Register type *unsigned char* (8 bits unsigned)
		short 16	Register type *short* (16 bits signed)
		ushort16	Register type *unsigned short* (16 bits unsigned)
		long 32	Register type: *slong* (32 bits unsigned)
		ulong 32	Register type: *unsigned long* (32 bits unsigned)
		flt 32	Register type *char* (32 bits, signed variable comma)
		sflt2x16	Register type: swapped *float,* value in two 16-bit registers (byte sequence: 3,2,1,0)
		flt 2x16	Register type: *float,* value in two 16-bit registers (byte sequence: 1,0,3,2)
		lng 2x16	Register type *long,* value in two 16-bit registers (32 bits signed, byte sequence 1,0,3,2)

		slng2x16	Register type *swapped long,* value in two 16-bit registers (32 bits signed, byte sequence 3,2,1,0)
		ulng2x16	Register type *unsigned long,* value in two 16-bit registers (32 bits unsigned, byte sequence 1,0,3,2)
		uSln2x16	Register type *unsigned swapped long,* value in two 16-bit registers (32 bits unsigned, byte sequence 3,2,1,0)
Interv.	Query period for the device in Master mode	1...36000 [0.1 … 3600 s]	
AnswTime	Maximum time before the response from the device queried by transducer with RS-485 interface operating in Master mode or Monitor mode	10...5000 [ms]	
Mode	Interface RS-485 operating mode	Slave	The transducer serves as Slave on the RS485 line, waiting for the queries and responds if they are addressed
		Monitor	The transducer monitors the traffic on the RS485 line and reacts to data exchange between the external devices working as Master and Slave
		Master	Transducer uses Master function on the RS-485 link, sends queries and analyzes responses received from the Slave device
Mast.Fun	Modbus protocol function used by the transducer working with RS-485 interface in Master mode	fun.0x03	Function 0x03
		fun.0x04	Function 0x04
No.ofErr	Maximum allowed number of repeated queries for the transducer with RS-485 interface in Master mode	0...10	

Table 8

Settings Archive			
Parameter symbol	Description	Range of changes	
Arch.Val	Selecting archived values (Each of the 16 measured values must be assigned „Yes” or „No” option, depending on whether the selected value should be archived or not) **Caution:** *change of register value will result in deletion of the internal memory archive!*	U	voltage
		I	current
		P	Active power
		Q	Reactive power
		S	Apparent power
		PF	Active power factor (P/S)
		tg	tgΦ factor (Q/P)
		F	Frequency
		PDM	Active power averaged

		SDM	Apparent power averaged
		IDM	Current averaged
		cos	Cosine of the angle between U and I
		THD U	Harmonic distortion factor of voltage
		THD I	Harmonic distortion factor of current
		Temper.	temperature
		2nd Val	second value displayed
		Clock	Real Time Clock
Param.Ar	Input value type controlling the conditional archiving	U	voltage
		I	current
		P	Active power
		Q	Reactive power
		S	Apparent power
		PF	Active power factor (P/S)
		tg	tgΦ factor (Q/P)
		F	Frequency
		PDM	Active power averaged
		SDM	Apparent power averaged
		IDM	Current averaged
		cos	Cosine of the angle between U and I
		THD U	Harmonic distortion factor of voltage
		THD I	Harmonic distortion factor of current
		Temper.	temperature
		2nd Val	second value displayed
		Clock	time
Ar. Mode	Archiving engagement condition. Fig. 18 shows the types of archiving engagement conditions (as per the types of alarms).	n-on	normal (change from 0 to 1).
		n-off	normal (change from 1 to 0).
		on	on
		off	off
		h_on	manual off; alarm output is permanently switched on until change of the alarm type.
		h_off	manual off; alarm output is permanently switched on until change of the alarm type.
OverLoAr	Conditional archiving lower limit	-99999G...99999G	
OverHiAr	Conditional archiving upper limit	-99999G...99999G	
Ar. Time	Archiving period (s)	1...3600	
Ar.Erase	Deleting an internal archive	Yes	deleting an internal archive
		No	do nothing
Rec.ToSD	Forced rewriting of the archive contents from internal memory to external SD/SDHC card (type: P30P-X1XXXXXX) or to file system internal memory (type: P30P-XX2XXXXXX)	Yes	rewriting of the internal archive to the SD/SDHC card
		No	do nothing

Param.SD	The percentage of the internal archive space used which triggers automatic writing to SD/SDHC card	5 ... 95

Table 9

Settings Ethernet (option, only type P30P-XX2XXXXXX)			
Parameter symbol	Description	Range of changes	
DHCP	Enabling/disabling the DHCP Client (supports automatic obtaining of IP protocol parameters of the transducer Ethernet interface from external DHCP servers in the same LAN)	off	DHCP disabled - you should manually configure the IP address and subnet mask of the transducer;
		on	DHCP enabled, transducer will automatically receive the IP address, subnet mask, and gateway address from the DHCP server when switching power is turned or ZastozZm option is selected from the menu; The gateway address is the address of the server that assigned the parameters to the transducer;
addrIP32	Third and second byte (B3.B2) of the transducer IP address, a value is displayed in decimal format, IPv4 address format: B3.B2.B1.B0	000.000 ... 255.255	
addrIP10	First and zero byte (B1.B0) of the transducer IP address, a value is displayed in decimal format, IPv4 address format: B3.B2.B1.B0	000.000 ... 255.255	
mask 10	Third and second byte (B3.B2) of the transducer subnet mask, a value is displayed in decimal format, mask format: B3.B2.B1.B0	000.000 ... 255.255	
mask 10	First and zero byte (B1.B0) of the transducer subnet mask, a value is displayed in decimal format, mask format: B3.B2.B1.B0	000.000 ... 255.255	
gate 32	Third and second byte (B3.B2) of the transducer default gateway, a value is displayed in decimal format, gateway address format: B3.B2.B1.B0	000.000 ... 255.255	
gate 10	First and zero byte (B1.B0) of the transducer default gateway, a value is displayed in decimal format, gateway address format: B3.B2.B1.B0	000.000 ... 255.255	
MAC 54	Fifth byte and fourth (B5.B4) of the transducer MAC address, a value is displayed in decimal format; format B5:B4:B3:B2:B1:B0	000.000 ... 255.255	
MAC 32	Third and second (B3.B2) of the transducer MAC address, a value is displayed in decimal format; format B5:B4:B3:B2:B1:B0	000.000 ... 255.255	
MAC 10	First and zero byte (B1.B0) of the transducer MAC address, a value is displayed in decimal format; format B5:B4:B3:B2:B1:B0	000.000 ... 255.255	

AddrmTCP	Device address for Modbus TCP/IP protocol	0 ... 255	
PortMbus	Modbus TCP port number	0 ... 65535	
TimeMbus	Port closing time of Modbus TCP/IP service, in seconds	10 ... 600	
no.c.TCP	The maximum simultaneous connections to Modbus TCP/IP service	1 ... 4	
p.comFTP	FTP server commands port number	20...65535	
port FTP	FTP server data port number	20...65535	
portHTTP	Web server port number	80...65535	
BaudRate	Baud rate	Auto	automatic
		10 Mb/s	10 Mbit/s
		100 Mb/s	100 Mbit/s
EthStdPa	Setting the new parameters of Ethernet interface	Yes	Restoring the default parameters of Ethernet interface
		No	no change
ReInitEt	Saving the new parameters of the Ethernet interface	Yes	Saving the new parameters and initiate Ethernet interface
		No	no change

Table 10

Settings Support			
Parameter symbol	Description	Range of changes	
Fabr.Par	Entering default setting. Setting "yes" value resets transducer parameters to their default values. Values of default parameters are presented in Table 15.	No	do nothing
		Yes	sets default factory values.
Security	Entering new password. Entering 0 value turns password protection off.	-99999...99999	
Time	Setting the current time. Entering invalid time value cancels time setting. Entered value will not be used.	00:00...23:59	
Date	Date setting - month+day. Entering invalid date value cancels date setting. Entered value will not be used.	01-01-10...31-12-99	
AutoTime	Automatic DST and inversely	No	no automatic daylight saving time change
		Yes	with automatic daylight saving time change
DispTest	LCD display and LED indicators test	No	do nothing
		Yes	starts the test
Language	Menu language selection	Polish	selection of Polish language
		English	selection of English language
SaveFile		No	do nothing
		Yes	Forced transducer configuration file saving to the external SD/SDHC card or file system internal memory

Separat.	Decimal point selection for archive files	.	dot
		,	comma

5.5. Functions of the transducer

5.5.1. Measuring input

Programmable transducer P30P is suited for single-phase power line parameters measurement and converting them into standard d.c current or d.c. voltage signal. Transducer measures the voltage, current and frequency values used to calculate other single-phase network parameters. Measurement signals of current and voltage are sampled with frequency dependent on the frequency of the signal used as the reference for measurement synchronization (voltage or current) so that the stable amount of 128 samples per single period is obtained. For 50 Hz signal, sampling value equals 6,4 kHz. Measurement values are calculated after samples from 8 periods are collected, so for the 50 Hz signal, the measurement value changes after 160 ms if instantaneous value averaging is turned off.

5.5.1.1 Averaging time of instantaneous values

The default averaging time of instantaneous values is sent to 1 second fir P30P transducer. This time can be changed to one of the predefined values: 0.2, 0.5, 1, 3, 5, 10 seconds. Instantaneous values include: voltage, current, active power, passive power, apparent power, active power coefficient, tg coefficient ϕ, frequency (registers 7500...7507).

5.5.1.2 Mean values, synchronized with the clock

For the values of active power, apparent power and current (registers 7508..7510) an averaging function for the period of 15, 30 and 60 minutes is available average values are synchronized with the real time clock, so that the values change after every full quarter, 30 minutes or every hour. Synchronization with the stepped 15-minutes window not synchronized wit the real time clock is also available.

5.5.1.3 Maximum and minimum values displayed

P30P transducer uses a minimum and maximum value memory function for all displayed values (registers 7500... 7514). Minimum and maximum values can be read and deleted using the transducer registers via Modbus protocol (RS-485, TCP/IP – see Tab. 43) or WWW server, they can also be displayed for the current displayed value after pressing the following key sequence: [↵][△]- maximum value, [↵] [◁]- minimum value. Maximum and minimum values can be deleted via the keyboard by pressing the following key sequence: [△][◁] . Maximum and minimum values are available in the register range 7532...7561.

5.5.2. Analog outputs

P30P transducer is always equipped with one main analog output (output #1) for current (source) or voltage, depending on the version. Output is connected to the terminals 15 and 16.

Depending on the version, transducer can be equipped with an additional analog output (output #2) in place of the alarm output using the terminals 13-14.

5.5.2.1. Individual characteristic of analog outputs

T30P transducer allows for processing measured values that are converted to output signal based on the analog output linear characteristics. On the base of given coordinates of two points by the user, the transducer determines (from the system of equations) coefficients a and b of the individual characteristic.

$$\begin{cases} Y1out = a \cdot X1in + b \\ Y2out = a \cdot X2in + b \end{cases}$$

where $X1\ in$ and $X2\ in$ – displayed value, $Y1\ out$ and $Y2\ out$ – expected value on analog output.

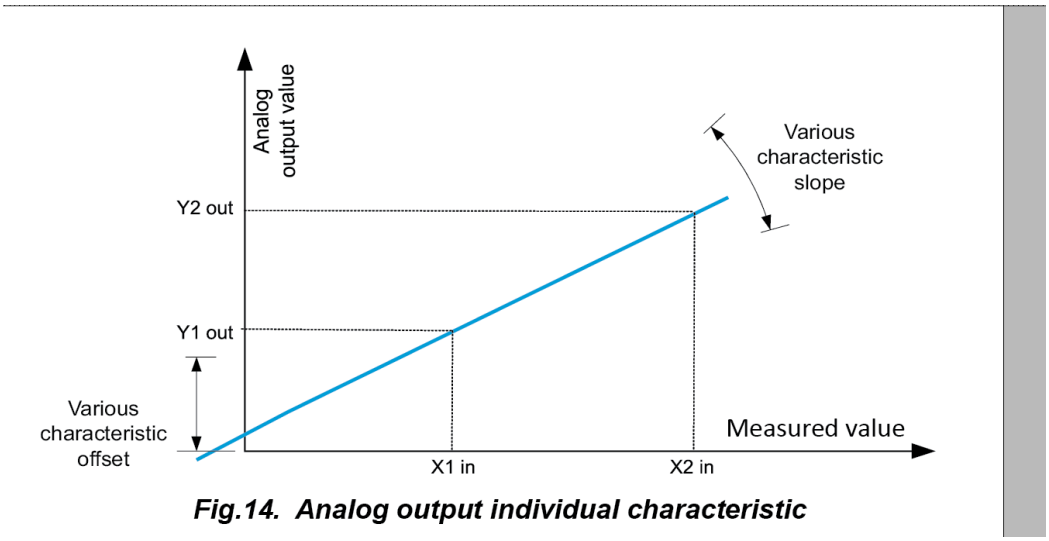

Fig.14. Analog output individual characteristic

Fig. 9 Individual characteristic of analog output

5.5.2.2 Analog outputs overrun support

P30P transducer allows the user to configure the analog outputs to handle the overrun of the defined threshold values. Overrun support is disabled by default – in such case, after the value controlling the output is overrun, the output is still controlled proportionally to the controlling value outside the basic output range. After the overrun support is enabled, user can define the output controlling value in case of the maximum or minimum output value overrun.

Example: Main analog output 1 configuration

Output set to react to the value of averaged active power. Individual characteristics of the current analog output is set as follows:

Table 11

Register no.	Parameter symbol in the menu	Register value	Parameter value symbol in the menu
4100	ParamAn1	8	PDM
4101	OverSer1	0	off
7606	AnIn Lo1	-200	-200.0
7607	AnIn Hi1	1200	1200.0
7608	AnOutLo1	4000*	4000*
7609	AnOutHi1	20000*	20000*

* value in the register is an integer value multiplied by 1000 (4mA → value 4000)

The Fig. 10 presents the reaction of the analog output when the analog output overrun support is off – analog output standard operating mode.

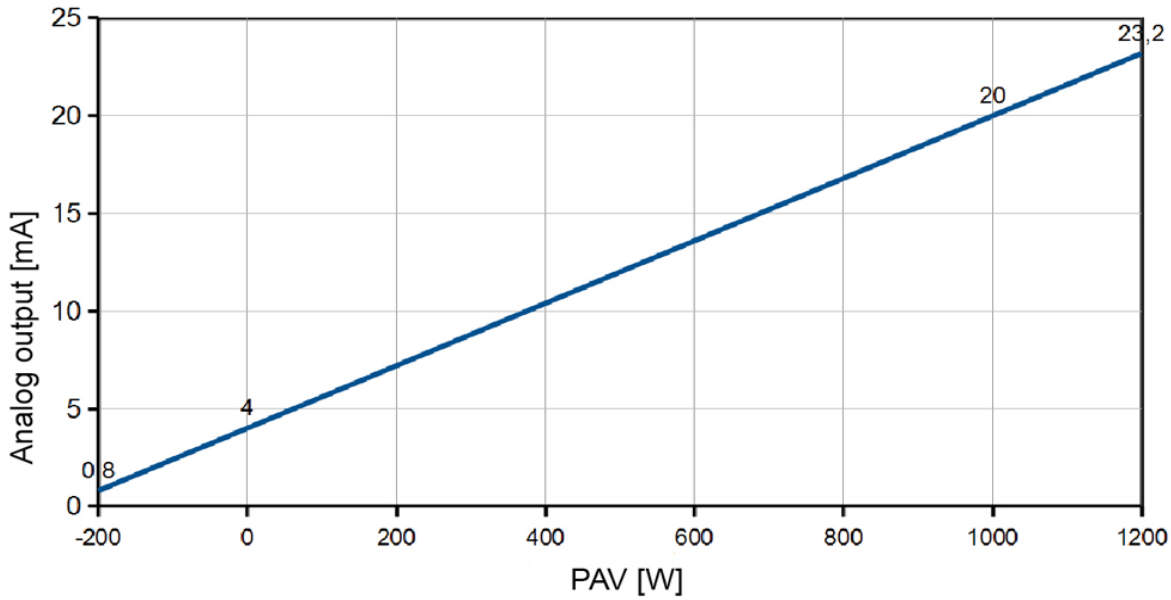

Fig. 10 Analog output with overrun support off

If the overrun support is turned on with all remaining values unchanged (parameters set according to Tab. 12), then the analog output will react as shown in the Fig. 12.

Table 12

Register no.	Parameter symbol in the menu	Register value	Parameter value symbol in the menu
4100	ParamAn1	8	PDM
4101	OverSer1	1	on

7606	AnIn Lo1	-200	-200.0
7607	AnIn Hi1	1200	1200.0
7608	AnOutLo1	4000*	4000*
7609	AnOutHi1	20000*	20000*
4102	OvOutLo1	0	0
4103	OvOutHi1	1000	1000
4104	OvrOutL1	1500*	1500*
4105	OvrOutH1	3500*	3500*

- value in the register is an integer value multiplied by 1000 (4mA → value 4000)

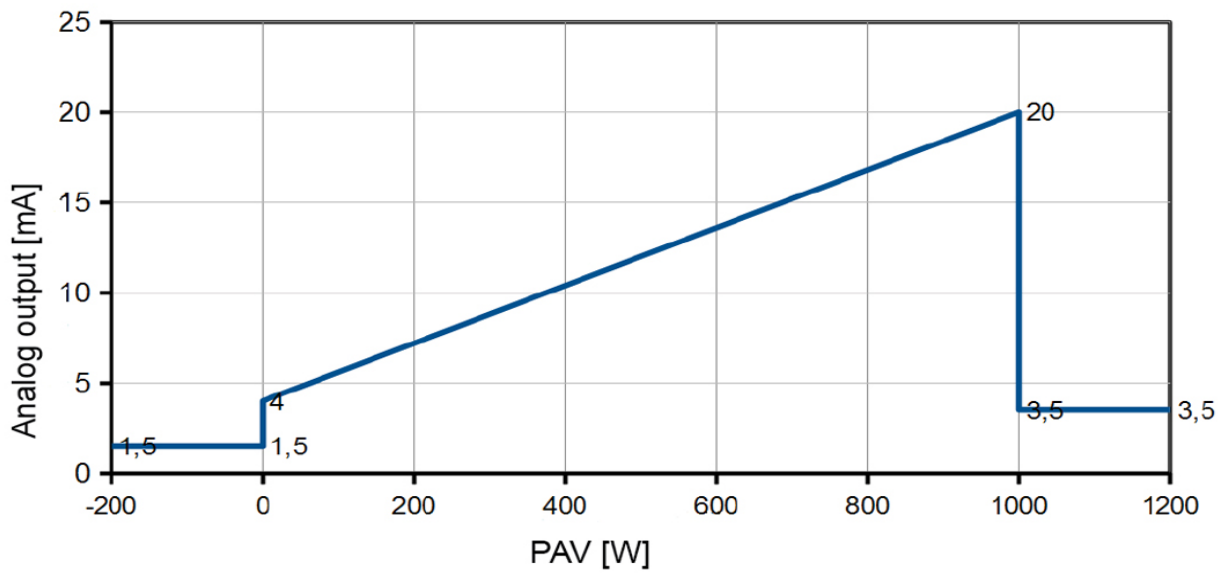

.

Fig. 11 Analog output with threshold limit handling on

Example: Main analog output (no. 1) configuration for the time reaction

Individual characteristics of the analog output no. 1 (current) are set so that the output reacts to the real time (hour*100+minute), i.e. for the 00:00 hours, the expected value is 4 mA and for 23:59 hours, the expected value is equal to 20 mA:

Table 13

Register no.	Parameter symbol in the menu	Register value	Parameter value symbol in the menu
4100	ParamAn1	16	time
4101	OverSer1	0	off
7606	AnIn Lo1	0	0.0
7607	AnIn Hi1	23.59	23.59
7608	AnOutLo1	4	4

7609	AnOutHi1	20	20.0

If the transducer is equipped with additional analog output (no. 2), it should be configured in the same way as main output, using the transducer → parameter menu: ParamAn2 ..OvrOutH2 or with registers (according to their description in Tab. 35).

Caution!

If the transducer is not equipped in additional analog outputs, then relevant parameters are not available. If the analog output has the threshold handling turned on, then configuration parameters for threshold handling are not available in the menu.

5.5.3 Alarm and power outputs

P30P transducer can be equipped with 2 normally open alarm contacts or 1 output with normally open contact and 1 24 VDC power output. (depending on version) Each alarm (24 VDC power output should be treated like one) can operate in one of six available modes. The Fig. 12 presents alarm operating in the following modes: n-on, n-off, on, off. Other two modes: h-on and h-off stand for always on and always off, respectively. These modes are used for manual simulation of the alarm state.

In case of the transducer version fitted with 24 VDC power output, second alarm should set as h-on, the auxiliary power output will be always on.

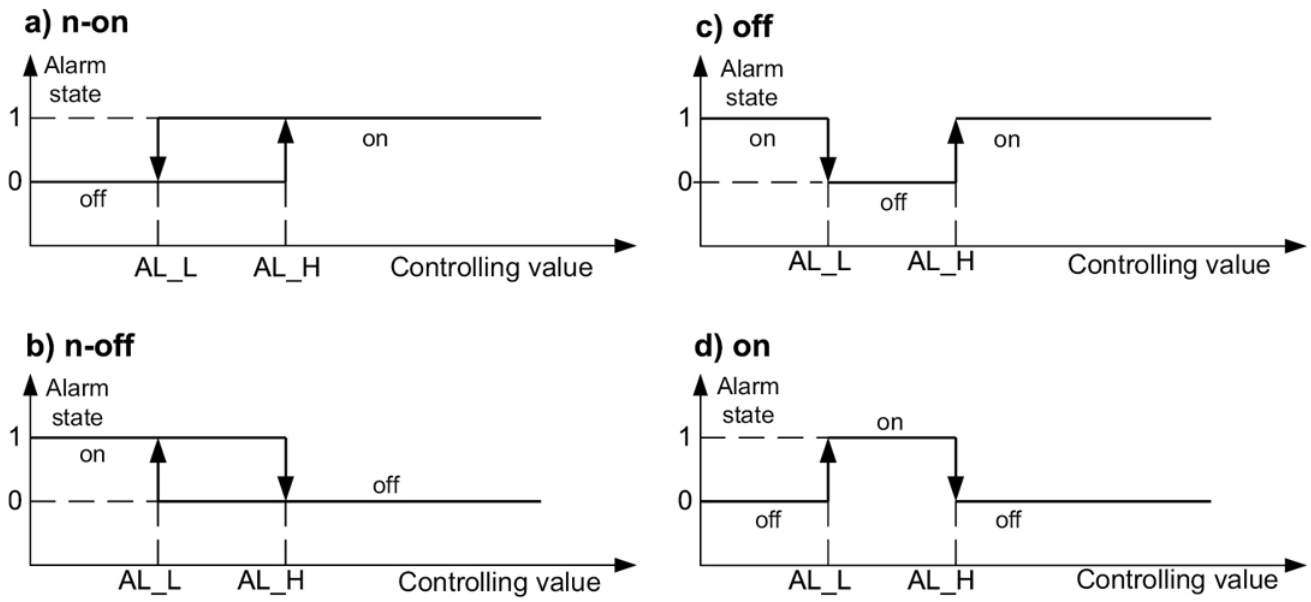

Fig. 12 Alarm types: a) n-on; b) n-off; c) on; d) off.

AL_L - Alarm lower limit
AL_H – Alarm upper limit

Caution: In case of alarm type n-on, n-off, on, off entering the AL_L > AL_H value will disable the alarm.

5.5.4 LCD display

P30P transducer is equipped with illuminated LCD display with two lines, 8 characters each. Upper display line is used to show values displayed in float format (5 digits for the value < 1000.0 or 4 digits + magnitude symbol for values ≥1000.0) and to display status icons of the SD/SDHC card, or after pressing the key sequence [ ][△] or [ ][◁] to display icons of the minimum and maximum value of the displayed parameter. Displayed values belong to the range of -9999G...9999G.

Table 14

Symbol	Display mode	Meaning
	continuous	SD/SDHC card or file system internal memory mounted and ready
	flashing	SD/SDHC card unmounted and ready to remove
	flashing	SD/SDHC card write-protected
	flashing	SD/SDHC card or file system internal memory is full
	continuous	Displaying maximum value
	continuous	Displaying minimum value

P30P transducer automatically sets the format (precision) of the display to the displayed value.

Measurement range overrun is signaled by special signs displayed in the upper line of the LCD.

- vvvvvG – overrun of the lower range limit for the value displayed
- ^^^^^G – overrun of the upper range limit for the value displayed

Lower line of the P30P transducer display can perform several functions. Pressing the following button: [⇦] or [ ] cycles the functions of the lower display line:

- name of the displayed value complete with the unit and the internal memory fill indicator. ( )
- time in HH:MM:SS
- date in DD:MM:YY
- bar graph showing the percentage control of the analog output
- second displayed value value of any transducer register projected onto the float number – number of the register to be displayed should be entered into the register 4024 (to display the

float value contained in 16-bit registers, e.g. register 7000, a relevant 32-bit register number should be entered, in this case - > 7500.)

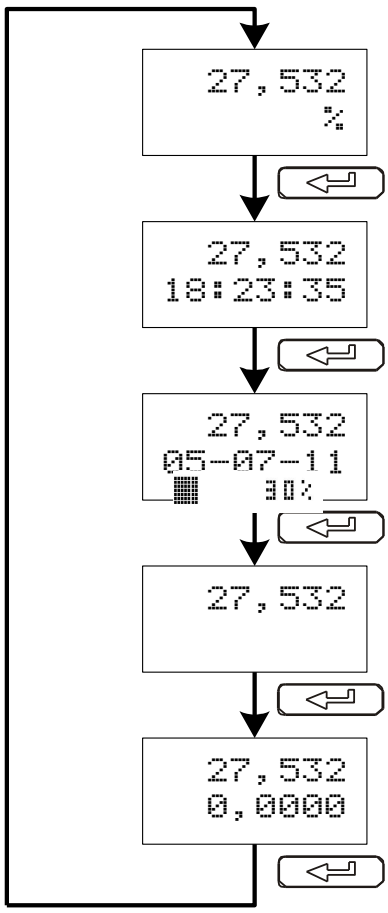

Fig. 13 Graph showing the cycling of the lower display line information.

5.5.4.1 Displayed values

After the power is turned on, the first value displayed on the upper line of LCD is by default the last set display value D_V (value set before turning off power) . The lower line shows symbol and unit of the actual displayed value. If the „Main displayed value" is set, it will be shown after power is on (with it's symbol and unit).

Displayed values are cycled by following buttons ◁ and △ According to the diagram shown in Fig. 14. For every displayed value it is possible to show minimum and maximum values using the following buttons ⊟◁ and ⊟△. If the „Main displayed value" is set , then 30 sec. after any key activity Main displayd value will be shown on the display.

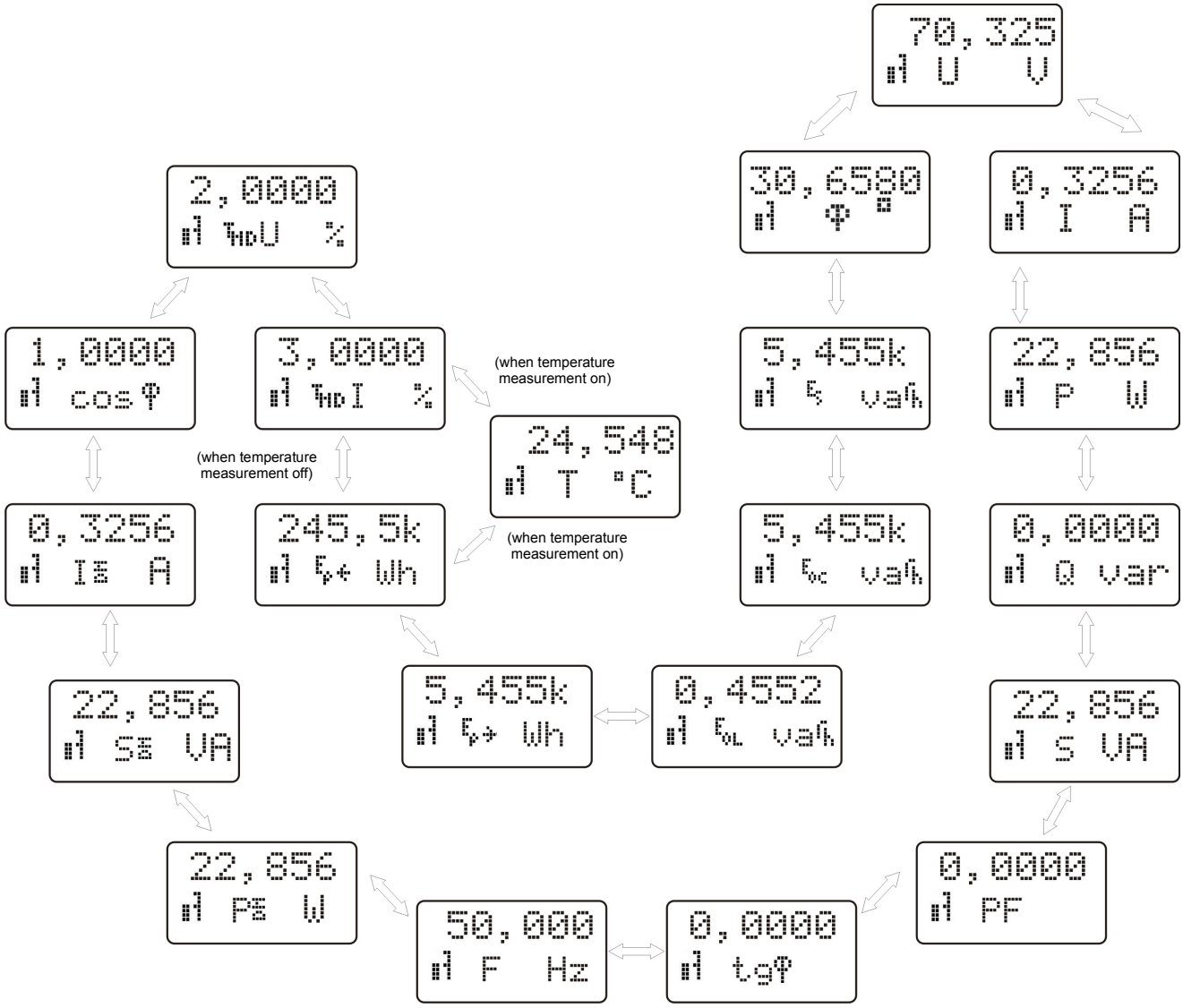

Fig. 14 Graph showing displayed information when buttons are used for cycling. [◁] *And* [△] *.*

Table 15

Symbol	Description
U V	RMS voltage
I A	RMS current
P W	Active power
Q var	Reactive power
S VA	Apparent power
PF	Active power factor (P/S)
tgφ	tgϕ factor (Q/P)
f Hz	Frequency
PB W	Active power averaged
SB VA	Apparent power averaged
IB A	Current averaged
cosφ	Cosine of the angle between U and I

THD U %	Harmonic distortion factor of voltage
THD I %	Harmonic distortion factor of current
T °C	Temperature (optional)
Ep+ Wh	Active import energy (positive)
Ep- Wh	Active export energy (negative)
EqL varh	Reactive inductive energy
EqC varh	Reactive capacity energy
Es Vah	Apparent energy
φ °	Angle between voltage and current

5.5.4.2 Main displayed value

User can select one of displayed values ((from U V … T °C) to be treated as „Main displayed value" D_M (menu Display → MainDisp , or writing value > 0 to register 4400). If the „Main displayed value" is set , then 30 sec. after any key activity Main displayd value will be shown with it's unit on the display. User can change unit using menu or modbus register 4401 (menu Display → MainUnit).

Main displayed value can be additionaly scaled using linear characteristic, according to equation:

$$D_M = A * D_V + B$$

Coefficients „A" and „B" of the individual characteristic can be set using menu Display → Ind.Ch.A / Ind.Ch.B or modbus registers 7624, 7625.

5.5.4.3 Service messages

The LCD can also display service information about the transmitter status - see table. 16.

Table 16

Message	Description
Restore Fabr.Par	Default value setting message, e.g. after the software update, transducer can operate normally – it is necessary to revert to factory settings; the message does not interfere with the display of the measured values – it is cycled.
Fabr.Par done	Successful reset to factory settings message, the message does not interfere with the display of the measured values – it is cycled every 20 seconds.
IP renew DHCP:	Automatic IP parameters refresh from DHCP server; after this message, display shows acquired IP address (only for versions with Ethernet interface).

5.5.5 Saving and reading transducer configuration file

P30P transducer in P30P-XX1XXXXXX and P30P-XX2XXXXXX version allow for reading and writing the configuration file from the external SD/SDHC card or file system internal memory.

5.5.5.1 Saving transducer configuration file

Writing of the current configuration file is possible after selecting a Service → SaveFile → Yes option from the menu or after entering value “1” into register 4078. Configuration text file will be saved in the ***P30P*** folder, filename: ***P30P_PAR.CON*** (point 5.8.4, Fig. 19). Subsequent configuration file write command will overwrite previously created file.

5.5.5.2 Reading transducer configuration file

Loading the transducer configuration from the file allows for quick configuration of the transducer equipped with the external SD/SDHC card or file system internal memory. Configuration file should be located in the ***P30P*** folder and be named ***P30P_PAR.CON.*** File can be generated by properly configured P30P transducer or by the eCon software used to configure P30P transducers (ModBus RS-485 or TCP/IP). For P30P transducers in P30P-XX2XXXXXX version, file can be transferred between devices via FTP. For P30P transducers in P30P-XX1XXXXXX version, single file on a memory card can be used to configure several transducers equipped with SD card slot.

To force parameter update from the file, power the transducer on while holding the following button: . If the file contains correct data and the configuration is accepted, the display will show following message:

Fig. 15 Message after successful loading of the configuration file.

If the parameter update was forced but no file was present or the file contains invalid data (at least one invalid parameter), the current configuration is not overwritten and the following message appears on the display:

Fig. 16 Message after unsuccessful loading of the configuration file

5.6. Default settings

Table 17 shows the standard settings of the P30D transducer. These settings can be reverted via the following option in the transducer menu: Settings Service → Fabr.Par → Yes or via the RS-485 interface after entering value “1” into register 4055.

Table 17

	Parameter symbol	Standard value
Input	Input type	230V, 5A or 100V, 5A (depending on version)
	Measurement type	1 phase
	DemandTm	Mov.Wind
	Averag.	1s
	Synchro.	Voltage
	I direct	Normal
	Clear En	All
	Reset AV	No
	TempMeas	No
	Primar.U	230.0000
	Second.U	230.0000
	Primar.I	5.0000
	Second.I	5.0000
Display	Bcklight	on
	Bckl.Int	70,00%
	Disp.Reg	7509
	MainDisp	Off.
	MainUnit	U V
	Ind.Ch.A	1,0000
	Ind.Ch.B	0,0000
Alarm 1,2	Param.A1 Param.A2	U
	Type A1 Type A2	n-on
	OverLoA1 OverLoA2	0
	OverHiA2 OverHiA2	20
	DlyOnA1 DlyOnA2	0
	DlyOffA1 DlyOffA2	0
	OnLockA1 OnLockA2	0
	SgKeepA1 SgKeepA2	on
Output	Param.A1 Param.A2	F
	AnIn Lo1 AnIn Lo2	40
	AnIn Hi1 AnIn Hi2	60
	AnOutLo1 AnOutLo2	4
	AnOutHi1 AnOutHi2	10
	OverSer1 OverSer2	Off

	OvOutLo1 OvOutLo2	4000
	OvOutHi1 OvOutHi2	20000
	OvrOutL1 OvrOutL2	4000
	OvrOutH1 OvrOutH2	20000
Mbus 485	Address	1
	ModeUnit	r8n2
	BaudRate	9600
	Base.Reg	7510
	No.ofVal	1
	ValType	flt 32
	Interv.	10
	AnswTime	1000
	Mode	Slave
	Mast.Fun	0x03
	No.ofErr	2
Archive	Arch.Val	U, I, P, Q, S
	Param.Ar	U
	Ar. Mode	h_off
	OverLoAr	0
	OverHiAr	0
	Ar. Time	10
	Ar.Erase	No
	Rec.ToSD	No
	Param.SD	1.05.2000
Service	Fabr.Par	No
	Security	00000
	Time	Undefined
	Date	Undefined
	AutoTime	No
	DispTest	No
	Language	Polish (for versions P30P-XXXXXXXXPX) English (for versions P30P-XXXXXXXXEX)
	SaveFile	No
	Separat.	.
	DHCP	on
	addrIP32	192.168
	addrIP10	001.030
	mask 10	255.255
	mask 10	255.000
	gate 32	192.168
	gate 10	001.001
	MAC 54	Variable value - individual for each transducer
	MAC 32	
	MAC 10	

Ethernet (optional)	AddrmTCP	1
	PortMbus	502
	TimeMbus	60
	no.c.TCP	4
	p.comFTP	21
	port FTP	1025
	portHTTP	80
	BaudRate	Auto
	EthStdPa	No
	ReInitEt	No

5.7. Software upgrades

A feature implemented in the P30P transducers enables to upgrade firmware using a PC with eCon software installed. Free eCon software and the update files are available at www.lumel.com.pl. Upgrade is possible if a PC is connected to RS485 to USB converter, such as PD10 converter.

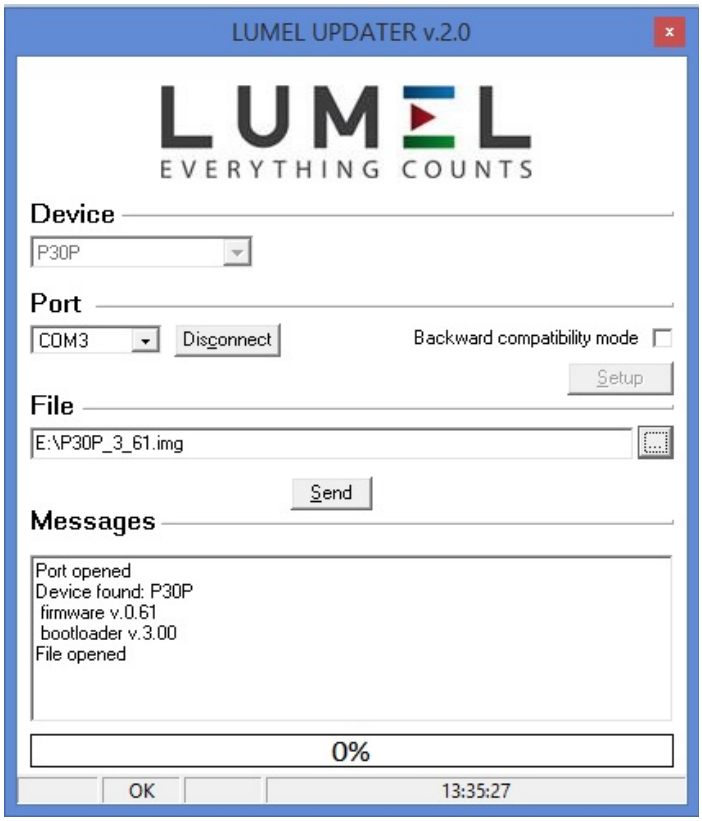

Fig. 17 View of the program for updating transducer software.

Caution! Software update automatically resets transducer settings to default, so it is recommended to save the settings using eCon software before upgrading.

After starting the eCon software, go to the ***Communication*** tab and set baud rate, mode, transducer address and RS-485 interface port. Then click the **Connect** icon and read all set parameters (it is necessary to revert them later). Next, click the **Firmware update** link, the LUMEL UPDATER (LU) software will appear – Fig. 24. Press the ***Connect*** *button.* The **Messages** information window displays information concerning upgrade process. If the port is opened correctly, a ***Port opened*** message appears. Upgrade mode is enabled using either of the two methods: remotely via LU (using eCon settings: address, mode, baud rate, COM port) and by turning a transducer on while pressing the following button: [⇦⏎] - update with standard communication parameters, i.e.: baud rate: 9600 kb/s, mode: 8N2 or with the following button pressed: [◁] - update with recommended communication parameters, i.e.: baud rate: 115200 kb/s, mode: 8N2. When all LEDs are lit and the „Connect UPDATER" message is displayed in the upper display line, the transducer is ready for the communication with PC. When transducer successfully connects to the LUMEL UPDATER software, LU program displays the following message: ***Device found: P30P*** , main program version and connected device bootloader version, while the transducer display shows the "Device is ready" message. Next, press the following button: ***...*** " to load the file with new software version in LUMEL UPDATER software. If the file is opened correctly, a ***File opened*** message is displayed in LU program window. Press the ***Send*** button. During update, signal LEDs are being lit in sequence, and the lower display line shows the percentage progress of the update. When upgrade is successfully completed, the transducer starts normal operation while the information window displays **Done** message and upgrade elapsed time.

Current software version can be checked by reading the welcome message when switching the transducer on.

Note: Software update is possible only when transducer is connected to PC (no other ***Master*** devices present on RS-485).

Caution: Turning the transducer power supply off during upgrade process may result in permanent damage!

5.8. Measuring values archiving

5.8.1 Transducer memory structure

P30 transducers are by default (regardless of the version) are equipped with 4MB internal memory to store data registered by the transducer. Any displayed value (registers 7500...7515) can be a registered parameter with an exception of meter values (energy meters). Second displayed value can be registered optionally. Internal memory of the transducer can store up to 534336 records. Memory is organized as a circular buffer. After the memory is full, the oldest data are overwritten first. Internal archive can be read, copied and deleted.

Additionally, P30P-XX1XXXXXXX version is equipped with SD/SDHC card slot, allowing the

archive data as files on the external SD/SDHC card.

P30P-XX2XXXXXX version is equipped with 8GB internal file system memory (memory size can be increased by manufacturer or on special order) storing the data automatically rewritten from the internal memory. The files can be downloaded via Ethernet using FTP.

Caution: Changing the menu parameter value `Archive → Arch.Val` will result in erasing the internal memory archive!!!

5.8.2 Internal memory

Transducer internal memory is divided into 8192 pages. Every memory page can accommodate up to 66 data records. Records within one page begin from the beginning of the page and fill the entire page space. Every memory page is 528 bytes long. Memory is divided into two areas: first 8096 pages are the basic archive memory, while the remaining 96 pages are the reserve archive that is used only during rewriting memory contents to the SD/SDHC card (total memory is 8096*528B + 96*528B = 4275312 bytes).

The starting point of the archived data is marked by the number of the page containing the first archive record and the starting byte determining page byte the first record starts from. The ending point of the archive is likewise marked by the number of the page containing the last archive record on that page and the first byte of the subsequent archive record to be written.

Deletion of the internal archive memory contents is done by assigning the archive end parameters to the archive start. This allows to retrieve memory contents in case archive is deleted.

Data in the internal archive memory are stored as 8-byte records. Current memory fill status can be displayed on LCD after setting the lower display line to show the unit and internal memory fill indicator. Table 18 describes the internal memory fill indicator.

Table 18

Symbol								
Internal memory fill percentage	87.5...100%	75...87.5%	62.5...75%	50...62.5%	37.5...50%	25...37.5%	12.5...25%	0...12.5%

5.8.2.1 Structure of the record

All data written to the internal data memory are stored as 8-byte records. Structure of the record is presented in the table below.

Table 19

Internal memory record (8 bytes)					
Registration time (4 bytes)			Data archived in the float format (4 bytes)		
Year - 2010	Month	Day	Hour	Minute	Second
6 bits	4 bits	5 bits	5 bits	6 bits	6 bits

Example: *Example of internal memory record coding – e.g. record no. 13 on page no. 559*

Record no. 13 (rec=13) on 559 page is read from registers 4553 – 4556 (unsigned short type registers – 2 bytes, 1 record covers 4 unsigned short type registers) after entering the value 559 into the register 4500. Starting register holding the record starting point can be found according to the following formula: R_0 = 4501 + rec*4 = 4553.

Table 20

Register	HEX value
4553	0x0170
4554	0xBB95
4555	0xE87C
4556	0xB942

rec = 0x0170BB95E87CB942

Data = 0xE87CB942 → (float) → 92.743958;

Table 21

Registration time = 0x0170BB95 → b10111000010111011100101 01					
Year + 2010	Month	Day	Hour	Minute	Second
6 bits	4 bits	5 bits	5 bits	6 bits	6 bits
0 0 0 0 0 0	0 1 0 1	1 1 0 0 0	0 1 0 1 1	1 0 1 1 1 0	0 1 0 1 0 1
0 + 2010	5	24	11	46	21
10-05-24 11:46					

Rec : 2010-05-24 11:46:21 92.743958

5.8.2.2. Acquisition of archived data from the internal memory

Archived data in the internal memory can be downloaded by a memory card (optional),

internal FTP server (optional) or RS-485 interface. Archived data acquisition is done by downloading memory pages containing data records. Downloading separate pages is possible thanks to eCon software.

Transducers equipped with SD/SDHC card slot allow for automatic rewriting of archived data to the memory card (the fastest way of archived data acquisition). To download the data using the card, insert the SD/SDHC card into the slot (contacts side down), making sure that the card was successfully mounted (a following card icon is displayed in the upper left corner of the display:). It is necessary to set the percentage fill threshold, because after this value is reached, the data will be automatically saved to card of file system internal memory – register 7614 or from menu: Archive → Param.SD. For example, if the value '20.0' is entered into the register 7614, data will be stored in the internal device memory until it is filled in 20%, when the device starts to write all subsequently saved data to SD/SDHC card or to file system internal memory. If the maximum percentage fill value is higher (e.g. 95%), data will be written to SD/SDHC card less often, but the saving process will be longer. Saving data to the card is marked by the progress bar on the lower LCD line. Do not remove SD/SDHC card from the device until the saving is completed, as this may cause data corruption or reset the device. Saving can be interrupted and the card removed after the card is unmounted, (see section 5.3.2).

It is also possible to force the rewriting of the archive to SD/SDHC card or to file system internal memory (only versions with Ethernet interface) after pressing the following key sequence: . For the transducer with the Ethernet interface, archived data can be loaded from the file system memory via FTP with any FTP client.

Note: If the transducer is connected to FTP client, the ability to write archived data from internal memory to the file system internal memory is not available! To download current data from the archive, you have to disconnect from the FTP session, force the archive rewriting (e.g. via following the combination of buttons: and connect the transducer to FTP client again.

5.8.3 Archiving configuration

Archiving parameters can be configured via the registers 4064 – 4069 (Tab. 39) and transducer menu in the Ustawien → Archiwum group. Archiving can be continuous or conditional. Conditional archiving can be realized in one of four conditions presented on Fig. 18 (n-on, n-off, off, on). Continuous archiving can be enabled by selecting the 'h-on' option and disabled by selecting 'h-off'.

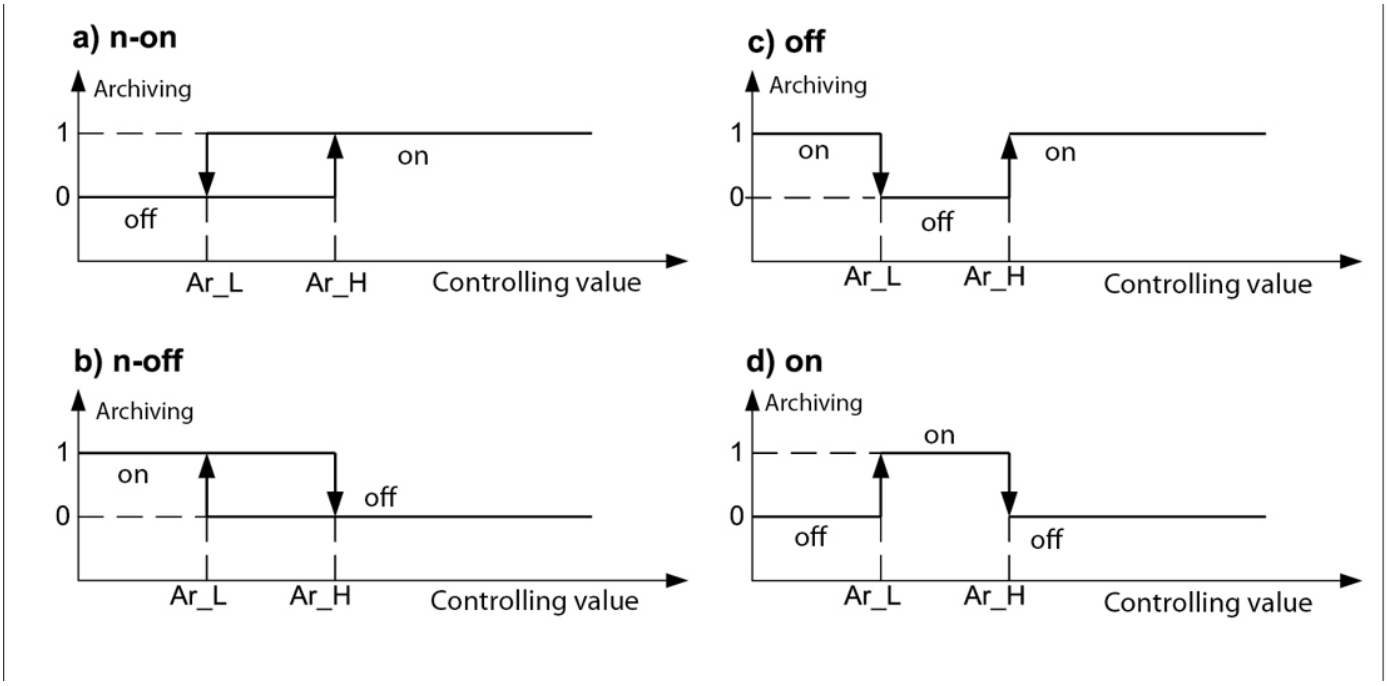

Fig. 18 Conditional archiving types

Ar_L - Archiving lower limit → OverLoAr → Register 7608
Ar_H – Archiving upper limit → OverHiAr → Register 7609

Example: Transducer configured for monitoring voltage, current, active power, THD U, THD I. Conditional archiving of five displayed values triggered by active power coefficient level – if PF falls below 0,9, transducer archives the values displayed every 10 seconds:

Table 22

Figure description	Register no.	Parameter symbol in the menu	Register value	Parameter value symbol in the menu
	4064	Arch.Val	12295	U, I, P, THD U, THD I
	4065	Param.Ar	5	PF
	4066	Ar. Mode	1	n-off
Ar_L	7608	OverLoAr	0.9	0.9
Ar_H	7609	OverHiAr	0.9	0.9
	4067	Ar. Time	10	10
	4068	Ar.Erase	0	No
	4069	Rec.ToSD	0	No
	7614	Param.SD	10	95.0

5.8.4 Memory card or internal memory file system (optional)

Transducers P30 in P30P-XX1XXXXXX versions use memory card compatible with SD and SDHC standard. Transducers P30 in P30P-XX2XXXXXX versions are equipped with file system internal memory – memory size 8GB. It is compatible with both FAT and FA32 file systems. If the

memory card is not formatted, it should be formatted in the card reader from the PC level. P30P transducer creates directories and files containing archive data. Before the card is inserted in the transducer, make sure that the card is not write-protected. Never attempt to remove the card from the transducer before the card is unmounted (see sec. 5.3.2) – the card is unmounted by pressing the buttons [△] [⏎]. Removal of the card that was not unmounted may corrupt the card contents. Memory card status is described in the transducer registers (sec. 5.9.8. Tab. 43). After the card is inserted into the slot, the displays shows card status for about 3 seconds, as presented in the table below:

Table 23

Message	Description
Eject SD	The card inserted but not installed (uninstalled).
DamageSD	Card inserted but the attempt failed.
UnlockSD	The card inserted, installed correctly but write-protected. The card is uninstalled automatically when write-protection is detected.
SD OK or SDHC OK	The card inserted and installed.
Full SD	The card inserted and installed but full.
Install.	Card inserted – installation in progress

For example, number of records on the SD/SDHC card with archiving period of 1 second and for one archived value equals:

- 64 MB card: approx. 1.900.000 records (approx. 22 days)
- 2 GB card: approx. 60.800.000 records (approx. 700 days)

Caution: It is recommended to use industrial-grade SD/SDHC cards, with minimum 6th write class. It is also possible to use a consumer-grade cards compatible with the w 6th writing speed class (it should be remembered that consumer-grade cards can operate in the temperature range of 0...40°C).

P30P transducer creates directories and files on the card during registration. An example of the directory structure is shown in Figure 19.

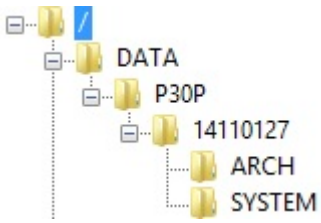

Fig. 19 The directory structure on the SD card.

Besides the ARCH directory, holding the archived data, a SYSTEM directory is created on the

card and complete with the file start.txt holding the date and hour of the installation of card or file system internal memory (also after the transducer is started after power failure).

Data on the card are stored in the files within directories corresponding to the name and serial number of the device – see Fig. 20. File names correspond to the registration date and follow the *XXXX_YY.Dzz* format, where*XXXX* → year, YY → month. Archive files extension is given in Dzz format, where „zz" is the following number of the archive file in given month. For example, first archive file in May 2015 will be named 2015_05.D00, the nest file will be named 2015_05.D01 etc. For every month a maximum of 32 files can be created (*.D00 … *.D31). File is automatically changed to another after it reaches the size of 12 MB when 1 or 2 values are archived. When more than 2 values are archived, the upper file size limit is set bu the transducer.

5.8.5 Archive files structure

Archive data files on external SD/SDHC card or in file system internal memory are organized by columns separated by tab. A column description is located in the first line of the file. Data records are located in the subsequent lines and the record fields are separated by tab. An example of the file is shown in Fig. 20

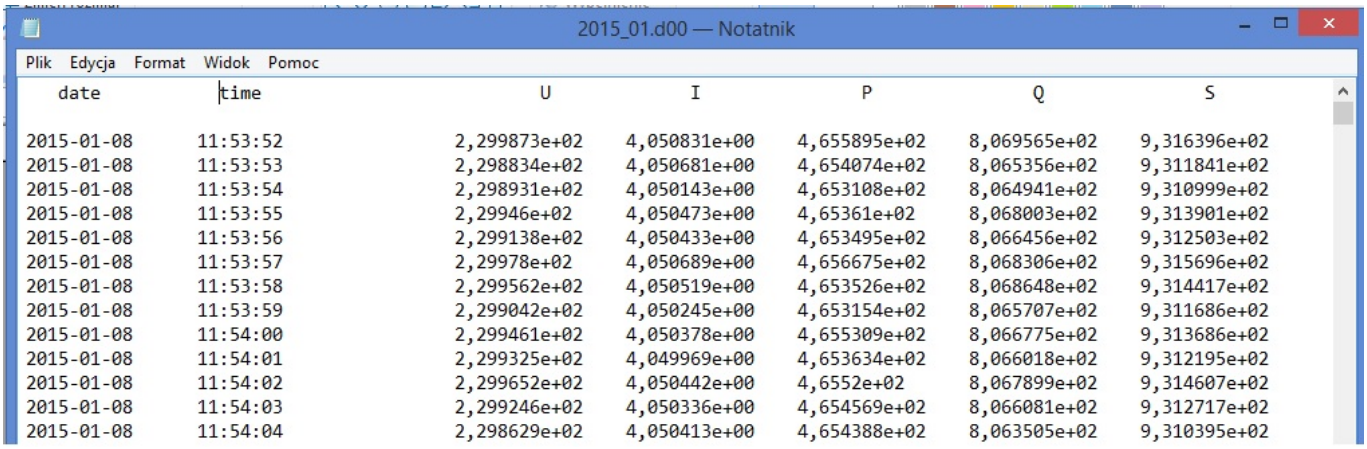

2015_01.d00 — Notatnik

Plik Edycja Format Widok Pomoc

date	time	U	I	P	Q	S
2015-01-08	11:53:52	2,299873e+02	4,050831e+00	4,655895e+02	8,069565e+02	9,316396e+02
2015-01-08	11:53:53	2,298834e+02	4,050681e+00	4,654074e+02	8,065356e+02	9,311841e+02
2015-01-08	11:53:54	2,298931e+02	4,050143e+00	4,653108e+02	8,064941e+02	9,310999e+02
2015-01-08	11:53:55	2,29946e+02	4,050473e+00	4,65361e+02	8,068003e+02	9,313901e+02
2015-01-08	11:53:56	2,299138e+02	4,050433e+00	4,653495e+02	8,066456e+02	9,312503e+02
2015-01-08	11:53:57	2,29978e+02	4,050689e+00	4,656675e+02	8,068306e+02	9,315696e+02
2015-01-08	11:53:58	2,299562e+02	4,050519e+00	4,653526e+02	8,068648e+02	9,314417e+02
2015-01-08	11:53:59	2,299042e+02	4,050245e+00	4,653154e+02	8,065707e+02	9,311686e+02
2015-01-08	11:54:00	2,299461e+02	4,050378e+00	4,655309e+02	8,066775e+02	9,313686e+02
2015-01-08	11:54:01	2,299325e+02	4,049969e+00	4,653634e+02	8,066018e+02	9,312195e+02
2015-01-08	11:54:02	2,299652e+02	4,050442e+00	4,6552e+02	8,067899e+02	9,314607e+02
2015-01-08	11:54:03	2,299246e+02	4,050336e+00	4,654569e+02	8,066081e+02	9,312717e+02
2015-01-08	11:54:04	2,298629e+02	4,050413e+00	4,654388e+02	8,063505e+02	9,310395e+02

Fig. 20 Example archive data file

Fields in the record line have the following meanings:

- *date* – date of data recording, separated by dash (-)
- *time* – hour, minute, second of recorded data, separated by colon (:) .
- U, I, P, Q, S ... – archived values displayed by the transducer, separated by period (.) what can be changed. to comma (,) by selecting appropriate option in Serwis menu or entering value "1" into register 4070; archived values are written in the engineering format

5.9. RS-485 interface

Programmable digital P30P transducers are equipped with serial RS-485 link for communication with computer systems and other Master devices. Asynchronous character MODBUS communication protocol has been implemented in a serial link. The transmission protocol describes how

to exchange information between devices via a serial link.

5.9.1 Connection of the serial interface

RS-485 standard allows for a direct connection of up to 32 devices on a single serial link with a length up to 1200 m (at baud rate 9600 b/s). It is necessary to use additional intermediate-separation circuits for connecting higher number of the devices, for example PD51 manufactured by LUMEL S.A.

Output of the interface line is shown in Fig. 3. To obtain the correct transmission it is necessary to connect the lines A and B in parallel with their equivalents in other devices. The connection must use a shielded wire. The cable shield should be connected to the protective terminal in close proximity to the transmitter (connect a shield to the protective terminal at one point only).

GND line serves as the additional security device in case of significant connection line length. In such case, GND signals of all RS-485 bus devices should be interconnected.

RS-485 interface card or the converter is required for a connection to a PC, for example PD51 or PD10. The method of connecting devices is shown in Fig. 21.

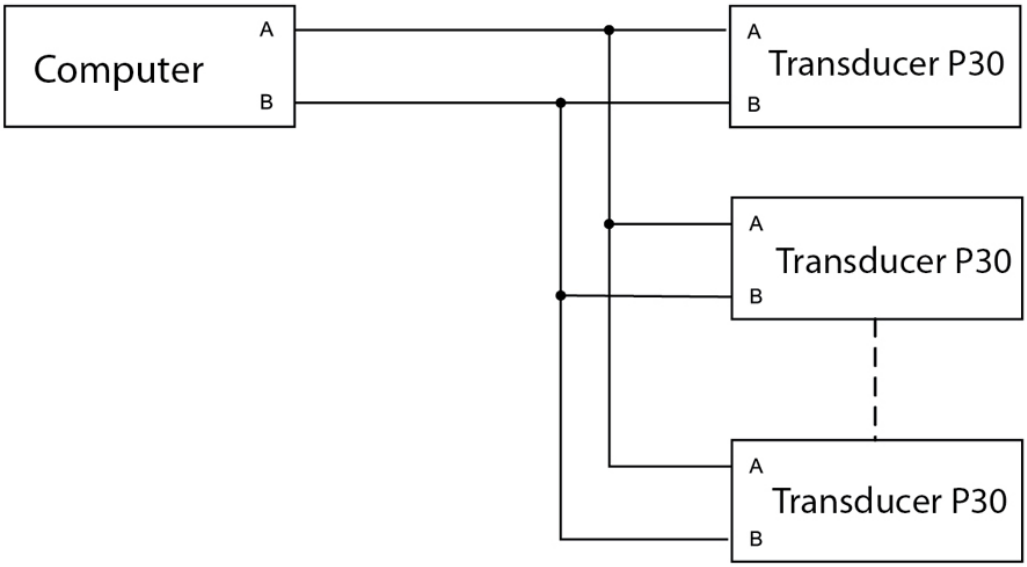

Fig. 21 Connecting the RS-485 interface.

Transmission line markings for the PC cards may vary depending on the card manufacturer.

5.9.2 Description of the MODBUS protocol implementation

The implemented protocol is compliant with the PI-MBUS-300 Rev G specification of Modicon.

Overview of P30P transducer MODBUS protocol serial port parameters:

- Transducer address 1..247.

- Baud rate: 4800, 9600, 19200, 38400, 57600, 115200, 230400, 256000 [b/s].
- Operating mode: RTU frame format: 8n2, 8e1, 8o1, 8n1.
- Maximum response time: 200 ms (time until the response start can be extended up to 500ms during writing to a SD/SDHC card or to the file system internal memory).

Configuration of the serial link parameters consists of determining the baud rate, the device address and the format of the transmission mode - protocol.

Note: Each transmitter connected to the communication network must:

- have a unique address, different from the addresses of other devices connected to the network.
- Identical baud rate and a type of transmission mode

5.9.3 Description of the implemented functions

The following functions of the MODBUS protocol have been implemented in P30P transducers:

- 03 (03h) – readout of registers group
- 04 (04h) – readout of input registers group
- 06 (06h) – single register writing
- 16 (10h) – registers group writing
- 17 (11h) – slave device identification

Readout of n-registers (code 03h)

Example: Readout of 2 registers, starting with the register address 1DB0h (7600) float (32-bit), (register values 10, 100.)

Request:

Table 24

Device address	Function	Register address		Number of registers		CRC checksum
		B1	B0	B1	B0	
01h	03h	1Dh	B0h	00h	02h	C380h

Response:

Table 25

Device address	Function	Number of bytes	Value from the register 1DB0 (7600)				Value from the register 1DB1 (7601)				CRC checksum
			B3	B2	B1	B0	B3	B2	B1	B0	
01h	03h	08h	41h	20h	00h	00h	42h	C8h	00h	00h	E46Fh

Example: Readout of two 32-bit float registers (7501, 7502) as a combination of 2 x 2 16-bit registers (7002, 7003, 7004, 7005), starting with the register address 1B5Ah (7002) - 32-bit register values 25.68, 20.25.

Request:

Table 26

Device address	Function	Register address		Number of registers		CRC checksum
		B1	B0	B1	B0	
01h	03h	1Bh	5Ah	00h	04h	62FEh

Response:

Table 27

Device address	Function	Number of bytes	Value from the register 1B5A h (7002)		Value from the register 1B5Bh (7003)		Value from the register 1B5Ch (7004)		Value from the register 1B5Dh (7005)		CRC checksum
			Value from the register 7501 (32 bits)				Value from the register 7502 (32 bits)				
			B3	B2	B1	B0	B3	B2	B1	B0	
01h	03h	08h	41h	CDh	70h	A4h	41h	A2h	00h	00h	83D0h

Example: Readout of two 32-bit float registers (7501, 7502) as a combination of 2 x 2 16-bit registers (6002, 6003, 6004, 6005), starting with the register address 1772h (6002) - 32-bit register values 25.68, 20.25.

Request:

Table 28

Device address	Function	Register address		Number of registers		CRC checksum
		B1	B0	B1	B0	
01h	03h	17h	72h	00h	04h	E1A6h

Response:

Table 29

Device address	Function	Number of bytes	Value from the register 1772h (6002)		Value from the register 1773h (6003)		Value from the register 1774h (6004)		Value from the register 1775h (6005)		CRC checksum
			Value from the register 7501 (32 bits)				Value from the register 7502 (32 bits)				
			B1	B0	B3	B2	B1	B0	B3	B2	
01h	03h	08h	70h	A4h	41h	CDh	00h	00h	41h	A2h	E411h

Single register writing (code 06h)

Example: Writing the value 543 (0x021F) to the register 4001 (0x0FA1)

Request:

Table 30

Device address	Function	Register address		Register value		CRC checksum
		B1	B0	B1	B0	
01h	06h	0Fh	A1h	02h	1Fh	9B94h

Response:

Table 31

Device address	Function	Register address		Register value		CRC checksum
		Hi	Lo	Hi	Lo	
01h	06h	0Fh	A1h	02h	1Fh	9B94h

Writing to n-registers (code 10h)

Example: Writing two registers starting with the register address 1DB0h (7600)

Writing the values 20, 200.

Request:

Table 32

Device address	Function	Address reg.Hi	Address reg.Lo	No. of registers Hi	No. of registers Lo	Number of bytes	Value for the register 1DB0 (7600)				Value for the register 1DB1 (7601)				CRC checksum
							B1	B0	B3	B2	B1	B0	B3	B2	
01h	10h	1Dh	B0h	00h	02h	08h	41h	A0h	00h	00h	43h	48h	00h	00h	C9E2h

Response:

Table 33

Device address	Function	Register address		Number of registers		CRC checksum
		B1	B0	B1	B0	
01h	10h	1Dh	B0h	00h	02h	4643h

Device identification report (code 11h)

Example: Device identification
Request:

Table 34

Device address	Function	Checksum
01h	11h	C02Ch

Response:

Table 35

Address	Function	Number of bytes	Device ID	Device status	Field dependent on device		Checksum (CRC)
					Firmware v 2.00	Registers 4308,4309, 4310, 4311 describing serial number, and device configuration of the transducer (ser. no.: 13100001)	
01h	11h	0Ch	C1h	FFh	02h 00h	A0h 01h 6Ch 0Dh A0h 01h 6Ch 0Dh	69FCh

Field dependent on the device – 4 bytes corresponding to the value of the registers 4308...4311, see Tab. 42. Production status 1...4.

5.9.4 Interface RS-485 Master mode

RS-485 interface can operate in Master mode, when the device can query single connected slave device. Both devices need to share communication parameters. Master mode is enabled by selecting the appropriate RS-485 operation mode from the menu: Mbus 485 → Mode → Master or entering value "2" to register 4042. In Master mode, following parameters have to be configured in Mbus 485 menu:

Table 36

Item	Mbus 485	
1	Address	Queried device address
2	ModeUnit	Transmission mode of a link
3	BaudRate	Baud rate
4	Base.Reg	Base register number
5	No.ofVal	Number of values queried
6	ValType	Type of values queried
7	Interv.	Query time [x100 ms]
8	AnswTime	Maximum response time [ms]
9	Mode	Serial interface operating mode
10	Mast.Fun	Function selection for Master mode (0x03 or 0x04)
11	No.ofErr	Number of query retries when no response is received

Parameters 4 - 6 can also be configured via RS-485 (registers 4048-4052) before Master mode is selected. After the Master mode is selected, transducer cannot be queried by another *Master* device.

All values read in Master mode are projected onto the float values and stored in registers 8000...8049, where first value read is put in the register 8000, second one is put in register 8001 etc.

In Mbus 485 menu you can find the No.ofErr parameter, defining allowed number of retries (number of repeated queries before error is signaled). This parameter is also modifiable via RS-485 (register 4005) before Master mode is selected.

To return the RS-485 interface to the Slave mode, select the desired serial interface mode from the device menu: Mbus 485 → Mode → Slave.

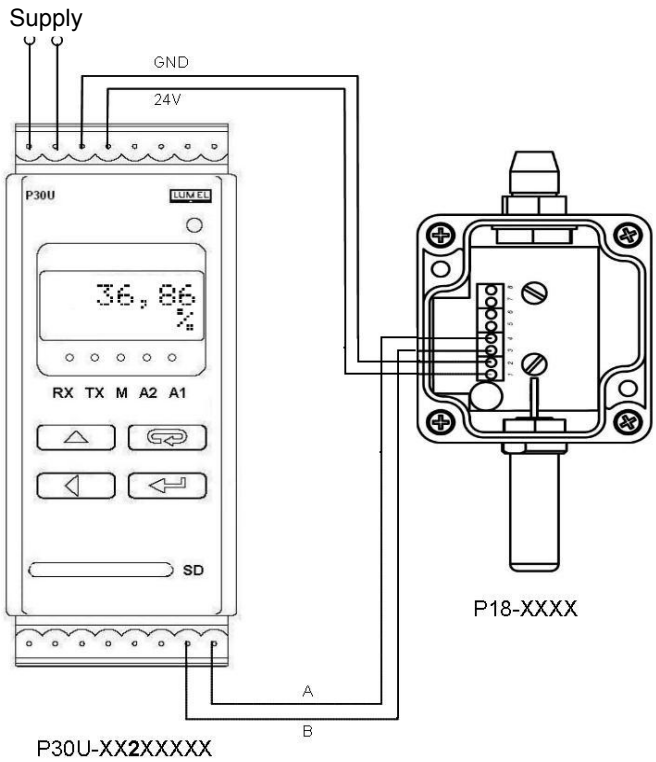

Fig. 22 Example: P30P transducer in Master mode used to read and store temperature from external transducer.

5.9.5 Interface RS-485 Monitor mode

RS-485 interface can operate in Monitor mode, allowing for monitoring RS-485 network traffic and react to particular response register of the selected device. P30P has to share the communication parameters with monitored devices. Serial interface Monitor mode is enabled by selecting the following mode from menu: Mbus 485 → Mode → Monitor or entering the value “1” to register 4042. In the Monitor mode, configure the following parameters in Mbus 485 menu:

Table 37

Item	Modbus	
1	Address	Monitored device address
2	ModeUnit	Transmission mode of a link
3	BaudRate	Baud rate
4	Base.Reg	Base - monitored - register number
5	ValType	Type of monitored values
6	AnswTime	Maximum response time of monitored device [ms]

Parameters 4 - 6 can also be configured via RS-485 (registers 4048-4052) before Monitor mode is selected. After the Monitor mode is selected, transducer cannot be queried by *Master* device.

As in the Master mode, monitored registers are copied to the register range 8000...8049. First monitored register is copied to register 8000 and can be treated as the main displayed value. If the parameter No.ofVal > 1 then values of the subsequent monitored registers are put in the subsequent registers from the range 8000...8049. For example, third monitored register is to be displayed, it is necessary to set the Display → Disp.Reg parameter to „8002" or enter the „8002" value into register 4024.

To return the RS-485 interface to Slave mode, select proper serial interface mode from the menu: Mbus 485 → Mode → Slave.

5.9.6 Map of the registers

In the P30P transducer, data are placed in 16-bit and 32-bit registers. Process variables and transducer parameters are placed in the register address area in a way depending on the variable value type. Bits in 16-bit registers are numbered from the youngest to the oldest (b0 … b15). The 32-bit registers (4 bytes) contain numbers of float type in IEEE-754 standard. Bytes sequence: B3 B2 B1 B0 – the oldest byte is transmitted as the first. 16-bit registers representing 32-bit values on two subsequent registers are duplicated in another address area wit the following byte sequence: B1 B0 B3 B2 (tab. 38).

A register map of P30P transducer is shown below.

Caution: All listed addresses are physical addresses. Some computer programs use logic addressing, then the addresses should be increased by 1.

Table 38

Address range	Value type	Description
0 - 0140	integer (16 bits)	The value is located in the 16-bit register (harmonic values)
4000 - 4127	integer (16 bits)	The value is located in the 16-bit register.
4300 - 4325	integer (16 bits)	The value is located in the 16-bit register.
4400 - 4439	integer (16 bits)	The value is located in the 16-bit register.

4500 - 4764	integer (16 bits)	The value is located in the 16-bit register.
6000-6198	float (32 bits)	Value set in the two following 16-bit registers. These registers contain the same data as 32-bit registers from 7500 range. Readout registers. Bytes sequence (B1,B0,B3,B2)
7000-7198	float (32 bits)	Value set in the two following 16-bit registers. These registers contain the same data as 32-bit registers from 7500 range. Readout registers. Bytes sequence (B3,B2,B1,B0)
6200 - 6337	float (32 bits)	Value set in the two following 16-bit registers. These registers contain the same data as 32-bit registers from 7600 range. Write and readout registers. Bytes sequence (B1,B0,B3,B2)
7200-7337	float (32 bits)	Value set in the two following 16-bit registers. These registers contain the same data as 32-bit registers from 7600 range. Write and readout registers.
7500-7599	float (32 bits)	The value is located in the 32-bit register. Registers are only for readout.
7600-7668	float (32 bits)	The value is located in the 32-bit register. The registers can be written and readout.
8000-8049	float (32 bits)	The value is located in the 32-bit register. The registers can be written and readout.
8100-8199	float (32 bits)	Value set in the two following 16-bit registers. These registers contain the same data as 32-bit registers from 8000 range. Write and readout registers. Bytes sequence (B3,B2,B1,B0)
8200-8299	float (32 bits)	Value set in the two following 16-bit registers. Registers contain the same data as 32-bit registers from the area 8000. The registers can be written and readout. Bytes sequence (B1,B0,B3,B2)

5.9.7 Registers for writing and readout

Table 39

The value is located in the 16-bit registers.	Symbol	Write (w)/ readout (r)	Range	Default value	Description	
4000	Inp.Type	w/r	0...3	0	Input type	
					Value	(depending on version)
					0	230V, 5A (max. 300V, 6A)
					1	100V, 5A (max. 120V, 6A)
					2	230V, 1A (max. 300V, 2A)
					3	100V, 1A (max. 120V, 2A)
4001	Measurem	w/r	0...1	0	Measured values interpretation mode	

	ent type				Value	
					0	1-phase network parameters
					1	3-phase network parameters
4002	DemandTm	w/r	0...3		Method of averaging of the P, S and I.	
					Value	
					0	15-minute moving window, value not synchronized with the clock
					1	15-minute moving window, value synchronized with the clock
					2	30-minute moving window, value synchronized with the clock
					3	60-minute moving window, value synchronized with the clock
4003	Averag.				Averaging time of the instantaneous values U, I, P, Q, S, PF, tg, f,	
					0	No averaging, value based on 8 intervals
					1	200ms
					2	500ms
					3	1s
					4	3s
					5	5s
					6	10s
4004	Synchro	w/r	0...1	0	Measuring input synchronization	
					Value	
					0	Voltage
					1	Current
4005	I direct	w/r	0...1	0	Current direction	
					Value	
					0	Normal
					1	Reversed
4006.. 4007					RESERVED	
4008	Clear En	w/r	0...5	0...5	Energy counters erasing	
					0	No change
					1	Resetting the received active energy counter
					2	Resetting the provided active energy counter
					3	Resetting the reactive inductive energy counter
					4	Reset of reactive capacity energy counter

					5	Reset of apparent energy counter
					6	Reset of all energy counters
4009	Rest. AV	w/r	0...1	0...1	Resetting the P, S, I average	
					0	No change
					1	Resetting average values
4010	TempMeas	w/r	0...2		Temperature measurement activation	
					0	without temperature measurement
					1	measurement on the RS-485 interface operating in Master mode (register 8000)
4011					RESERVED	
4012.... ..4015		w/r			RESERVED	
4016		w/r	0...3	0	Reseting maximum and minimum value	
					Value	Description
					0	no change
					1	reseting minimum values
					2	reseting maximum values
					3	reseting maximum and minimum values
4017		w/r	0...1	0	Transducer status resetting	
					Value	Description
					0	no change
					1	status resetting
4018						
4019	Bckl.Int	w/r	1...10	7	Value	Description
					1	Intensity of LCD display panel illumination – 10% of max. illumination
					...	
					10	Intensity of LCD display panel illumination – 100% of max. illumination
4020						
4021					RESERVED	
4022	Bcklight	w/r	0.....61	61	LCD display panel illumination	
					Value	Description
					0	Disabled
					1...60	Disabled for 1...60 s
					61	Permanently enabled
4023					RESERVED	

4024	Disp.Reg	w/r	0....65535	7509	Number of the register displayed on the lower display line (to display float type register value within the 16-bit registers input corresponding number of the 32-bit register)	
4025		w/r	0...1	0	Resetting of the alarm signal support on LED (A1, A2)	
4026	Param.A1	w/r	0...16	0	Input value controlling the alarm 1	
					Value	Description
					0	Register values 7500 - voltage
					1	Register values 7501 – current
					2	Register values 7502 – active power
					3	Register values 7503 – reactive power
					14	Register values 7514 - temperature
					15	Second value displayed
					16	Clock
4027	Type A1			0	Alarm 1 type (description – Fig. 12)	
					Value	Description
					0	n-on
					1	n-off
					2	on
					3	off
					4	h_on
					5	h_off
4028	DlyOnA1	w/r	0...900	0	Alarm 1 activation delay time (s)	
4029	DlyOffA1	w/r	0...900	0	Alarm 1 deactivation delay time (s)	
4030	OnLockA1	w/r	0...900	0	Alarm 1 re-activation delay time (s)	
4031	SgKeepA1	w/r	0...1	1	Alarm 1 signalization latch (LED flashing)	
					Value	Description
					0	Latch disabled
					1	Latch enabled
4032		w/r			RESERVED	
4033	Param.A2	w/r	0...14	0	Input value controlling the alarm 2	
					Value	Description
					0	Register values 7500 - voltage
					1	Register values 7501 – current
					2	Register values 7502 – active power
					3	Register values 7503 – reactive power
					..	..
					14	Register values 7514 - temperature

					15	Second value displayed
					16	Clock
4034	Type A2			0	Alarm 2 type (description – Fig. 12)	
					Value	Description
					0	n-on
					1	n-off
					2	on
					3	off
					4	h_on
					5	h_off
4035	DlyOnA2	w/r	0...900	0	Alarm 2 activation delay time (s)	
4036	DlyOffA2	w/r	0...900	0	Alarm 2 deactivation delay time (s)	
4037	OnLockA2	w/r	0...900	0	Alarm 2 re-activation delay time (s)	
4038	SgKeepA2	w/r	0...1	1	Alarm 2 signalization latch (LED flashing)	
					Value	Description
					0	Latch disabled
					1	Latch enabled
4039...4041		w/r			RESERVED	
4042	Mode	w/r	0...2	0	Interface RS-485 operating mode	
					0	The transducer serves as Slave on the RS485 line, waiting for the queries and responds if they are addressed
					1	The transducer monitors the traffic on the RS485 line and reacts to data exchange between the external devices working as Master and Slave
					2	Transducer uses Master function on the RS-485 link, sends queries and analyzes responses received from the Slave device
4043	Address	w/r	0...247	1	Transducer address for RS-485 interface. Entering the value "0" disables the function.	
4044	ModeUnit	w/r	0...3	0	Interface RS-485 transmission mode	
					0	RTU 8N2
					1	RTU 8E1
					2	RTU 8O1
					3	RTU 8N1
4045	BaudRate	w/r	0...7	1	RS-485 interface baud rate	
					Value	Description
					0	4800 bit/s
					1	9600 bit/s
					2	19200 bit/s
					3	38400 bit/s
					4	57600 bit/s

					5	115200 bit/s
					6	230400 bit/s
					7	256000 bit/s
4046	Mast.Fun	w/r	0....1	0	Modbus protocol function used by the transducer working with RS-485 interface in Master mode	
					0	function 0x03
					1	function 0x04
4047	No.ofErr	w/r	0...10	2	Allowed number of errors in the RS-485 interface Master mode	
4048	AnswTime	w/r	10...5000	1000	Maximum time until response in serial interface Master and Monitor modes [ms]	
4049	ValType	w/r	0...12	6	Type of values queried/monitored in serial interface Master or Monitor mode	
					char 8	Register type *char* (8 bits signed)
					uchar 8	Register type *unsigned char* (8 bits unsigned)
					short 16	Register type *short* (16 bits signed)
					ushort16	Register type *unsigned short* (16 bits unsigned)
					long 32	Register type *long* (32 bits signed)
					ulong 32	Register type: *unsigned long* (32 bits unsigned)
					flt 32	Register type *char* (32 bits, signed variable comma)
					sflt2x16	Register type: swapped *float,* value in two 16-bit registers (byte sequence 3,2,1,0)
					flt 2x16	Register type: *float,* value in two 16-bit registers (byte sequence 1,0,3,2)
					lng 2x16	Register type *long,* value in two 16-bit registers (32 bits signed, byte sequence 1,0,3,2)
					slng2x16	Register type *swapped long,* value in two 16-bit registers (32 bits signed, byte sequence 3,2,1,0)
					ulng2x16	Register type *unsigned long,* value in two 16-bit registers (32 bits unsigned, byte sequence 1,0,3,2)
					uSln2x16	Register type *unsigned swapped long,* value in two 16-bit registers (32 bits unsigned, byte sequence 3,2,1,0)
4050	Base.Reg	w/r	0...65535	7510	Number of the base register queried/monitored in the RS-485 interface Master or Monitor mode	
4051	No.ofVal	w/r	0...50	1	Number of values queried/monitored in serial interface Master or Monitor mode	
4052	Interv.	w/r	1...36000	10	Query period for the device in RS-485 Master mode	
4053		w/r	0...1	0	Transmission parameters update. It uses the	

					entered settings of RS-485 interface.	
4054	Language	w/r	0...3	0	Transducer language menu:	
					Value	Description
					0	Polish
					1	English
4055	Fabr.Par	w/r	0...1	0	Standard parameters saving	
					Value	Description
					0	No change
					1	Standard parameters setting
4056	Security	w/r	0...9999	0	Password for parameters setting	
					Value	Description
					0	No change
					...	Enters the parameters setting menu after accepting the correct password.
4057	Time	w/r	0...2359	-	Current time – hours, minutes	
					This parameter is given in ggmm format, where: gg - stands for hours, mm – stands for minutes. Entering incorrect value (out of range) results in setting the value 23 for hours and 59 for minutes. After the save is completed, register 4055 (seconds) is zeroed.	
4058		w/r	0...60	-	Current time – seconds	
4059		r	0...100	-	Current time – 1/100 second	
4060	Date	w/r	101...1231	-	Current date in month*100 + day format	
4061		w/r	2001...2099	-	Current year in YYYY format.	
4062		w/r	0...1	0	Automatic DST and inversely	
					Value	Description
					0	Off
					1	On
4063		w/r			RESERVED	
4064	Arch.Val	w/r	0...65535	0	Selecting archived values **Caution:** *change of register value will result in deletion of the internal memory archive!*	
					Value	Description
					0x0001	Bit 1 – registry 7500 value registration
					0x0002	Bit 2 – registry 7501 value registration
					0x0004	Bit 3 – registry 7502 value registration
					0x0008	Bit 4 – registry 7503 value registration
					..	..

						Second value displayed
					0x7FFF	Registration of register value 7500...7514 + second displayed value
4065	Param.Ar	w/r	0...16	0	Value controlling conditional archiving trigger	
					Value	Description
					0	Register values 7500 - voltage
					1	Register values 7501 – current
					2	Register values 7502 – active power
					3	Register values 7503 – reactive power
					..	..
					14	Register values 7514 - temperature
					15	Second value displayed
					16	Clock
4066	Ar. Mode	w/r	0...5	5	Archiving type (description – Fig. 18)	
					Value	Description
					0	n-on
					1	n-off
					2	on
					3	off
					4	h_on
					5	h_off
4067	Ar. Time	w/r	1...3600	10	Archiving period in seconds	
4068	Ar.Erase	w/r	0...1	0	Deleting an internal archive	
4069	Rec.ToSD	w/r	0...1	0	Saving of the internal archive to SD/SDHC card	
					Value	Description
					0	No action
					1	Start of internal archive saving to SD/SDHC card
4070		w/r	0...1	0	Decimal point selection for archive files	
					Value	Description
					0	comma
					1	dot
4071..... 4077		w/r			RESERVED	
4078	SaveFile	w/r	0...2	0	Value	Description
					0	No action
					1	Transducer configuration saving to ***P30P_PAR.CON*** file on the external SD/SDHC card or in the file system internal memory
					2	Transducer configuration readout from

						P30P_PAR.CON file on the external SD/SDHC card or in the file system internal memory
4079		w/r		-	RESERVED	
4080	EthStdPa	w/r	0...1	0	Setting the new parameters of Ethernet interface	
					Value	Description
					0	No change
					1	Restoring the default parameters of Ethernet interface
4081	addrIP32	w/r	0...65535	49320	The third and the second byte (B3.B2) of the IP address of the transducer, the IPv4 address format: B3.B2.B1.B0	
4082	addrIP10	w/r	0...65535	286	The first and zero byte (B1.B0) of the IP address of the transducer, the IPv4 address format: B3.B2.B1.B0	
4083	mask 10	w/r	0...65535	65535	The third and the second byte (B3.B2) of the transducer subnet mask, mask format: B3.B2.B1.B0	
4084	mask 10	w/r	0...65535	65280	The first and zero byte (B1.B0) of the transducer subnet mask, the mask format: B3.B2.B1.B0	
4085	MAC 54	r	0...65535	-	The fifth and fourth byte (B5.B4) of the transducer MAC address, format B5:B4:B3:B2:B1:B0	
4086	MAC 32	r	0...65535	-	The third and the second byte (B3.B2) of the transducer MAC address, format B5:B4:B3:B2:B1:B0	
4087	MAC 10	r	0...65535	-	The first and zero byte (B1.B0) of the transducer MAC address, format B5:B4:B3:B2:B1:B0	
4088	gate 32	w/r	0...65535	49320	The third and the second byte (B3.B2) of the transducer default gateway, the gateway address format: B3.B2.B1.B0	
4089	gate 10	w/r	0...65535	257	The first and zero byte (B1.B0) of the transducer default gateway, the gateway address format: B3.B2.B1.B0	
4090	DHCP	w/r	0...1	1	Enabling/disabling the DHCP Client (supports automatic obtaining of IP protocol parameters of the transducer Ethernet interface from external DHCP servers in the same LAN)	
					Value	Description
					0	DHCP disabled - you should manually configure the IP address and subnet mask of the transducer;
					1	DHCP enabled, the transducer will automatically receive the IP address, subnet mask, and gateway address from the DHCP server when switching the supply on or selecting ReInitEt option from the menu or entering the value "1" to the register 4099; the gateway address is the address of the server that assigned the parameters to

						the transducer;
4091	BaudRate	w/r	0...2	0	Baud rate of the Ethernet interface:	
					Value	Description
					0	Automatic selection of the baud rate
					1	10 Mb/s
					2	100 Mb/s
4092	p.comFTP	w/r	20...65535	21	FTP server commands port number	
4093	port FTP	w/r	20...65535	1025	FTP server data port number	
4094	no.c.TCP	w/r	1...4	4	The maximum simultaneous connections to Modbus TCP/IP service	
4095	TimeMbus	w/r	10...600	60	Port closing time of Modbus TCP/IP service, in seconds	
4096	AddrmTCP	w/r	0...255	1	Device address for Modbus TCP/IP protocol	
4097	PortMbus	w/r	0...65535	502	Modbus TCP port number	
4098	portHTTP	w/r	80...65535	80	Web server port number	
4099	ReInitEt	w/r	0...1	0	Saving the new parameters and initiate Ethernet interface	
					Value	Description
					0	No change
					1	Saving the new parameters and initiate Ethernet interface
4100	ParamAn1	w/r	0..16	7	Input value controlling the analog output 1	
					Value	Description
					0	Register values 7500 - voltage
					1	Register values 7501 – current
					2	Register values 7502 – active power
					3	Register values 7503 – reactive power
					..	..
					7	Frequency
					...	...
					14	Register values 7514 - temperature
					15	Second value displayed
					16	Clock
4101	OverSer1	w/r	0...1	0	Analog output 1overrun support	
					Value	Description
					0	Off
					1	On
4102	OvOutLo1	w/r	0...24000	0	Output 1 lower overrun value x1000	
4103	OvOutHi1	w/r	0...24000	20000	Output 1 upper overrun value x1000	

4104	OvrOutL1	w/r	0...24000	0	Output 1 expected value when its lower limit is exceeded x1000	
4105	OvrOutH1	w/r	0...24000	0	Output 1 expected value, when its upper limit x1000 is exceeded	
4106	Param.A2	w/r	0..16	0	Input value controlling the analog output 2 (option)	
					Value	Description
					0	Register values 7500 - voltage
					1	Register values 7501 – current
					2	Register values 7502 – active power
					3	Register values 7503 – reactive power
					..	..
					14	Register values 7514 - temperature
					15	Second value displayed
					16	Clock
4107	OverSer2	w/r	0...1	0	Analog output 2 overrun support	
					Value	Description
					0	Off
					1	On
4108	OvOutLo2	w/r	0...24000	0	Output 2 lower overrun value x1000	
4109	OvOutHi2	w/r	0...24000	20000	Output 2 upper overrun value x1000	
4110	OvrOutL2	w/r	0...24000	0	Output 2 expected value, when its lower limit x1000 is exceeded	
4111	OvrOutH2	w/r	0...24000	0	Output 2 expected value, when its upper limit x1000 is exceeded	
4112... 4127		w/r			RESERVED	

Table 39.1

The value is located in the 16-bit registers.	Symbol	Write (w)/ readout (r)	Range	Default value	Description	
4400	MainDisp	w/r	0...15	0	Main displayed value	
					Value	
					0	Off.
					1	Register 7500 value - voltage
					2	Register 7501 value - current
					3	Register 7502 values – active power
					4	Register 7503 values – reactive power

					..	..
					15	Register 7514 values- temperature
4401	MainUnit	w/r	0...22	0	Main displayed value unit	
					Value	
					0	U V
					1	I A
					2	P W
					3	Q var
					4	S VA
					5	f Hz
					6	E+ Wh
					7	EL varh
					8	ES Vah
					9	PF
					10	tgφ
					11	cosφ
					12	varh
					13	T °C
					14	THD U %
					15	THD I %
					16	PS W
					17	SS VA
					18	IS A
					19	E- Wh
					20	EC varh
					21	φ °
					22	I mA

Table 40

The value is located in the 16-bit registers.	Write (w)/readout (r)	Range	Default value	Description
4500	w/r	0...7712	0	Number of the memory page being accessed. Page number saving
4501	r	0...65535	-	First two bytes from the page indicated by 4500 register.
4502	r	0...65535	-	Two subsequent bytes
---	---	---	-	---
4764	r	0...65535	-	Two last bytes of a memory page (bytes 526 and 527)

Table 41

Value set in the two following 16-bit registers. Registers contain the same data as 32-bit registers from the area 7600.	The value is located in 32-bit registers.	Symbol	Write (w)/ readout (r)	Range	Default value	Description
6200/7200	7600	OverLoA1	w/r	-9.9999e13 ...99999e13	0	Alarm 1 lower limit
6204/7202	7601	OverHiA1	w/r	-9.9999e13 ...99999e13	20	Alarm 1 upper limit
6206/7204	7602	OverLoA2	w/r	-9.9999e13 ...99999e13	0	Alarm 2 lower limit
6208/7206	7603	OverHiA2	w/r	-9.9999e13 ...99999e13	20	Alarm 2 upper limit
6210/7208	7604	OverLoAr	w/r	-9.9999e13 ...99999e13	0	Lower limit of conditional archiving
6212/7210	7605	OverHiAr	w/r	-9.9999e13 ...99999e13	20	Upper limit of conditional archiving
6214/7212	7606	AnIn Lo1	w/r	-9.9999e13 ...99999e13	0	Individual characteristic of analog output 1- lower limit of the controlling value
6214/7214	7607	AnIn Hi1	w/r	-9.9999e13 ...99999e13	100	Individual characteristic of analog output 1 - upper limit of controlling value
6214/7216	7608	AnOutLo1	w/r	0...24	0	Individual characteristic of analog output 1- lower limit of the controlling value
6218/7218	7609	AnOutHi1	w/r	0...24	20	Individual characteristic of analog output 1- upper limit of the controlling value
6220/7220	7610	AnIn Lo2	w/r	-9.9999e13 ...99999e13	0	Individual characteristic of analog output 2- lower limit of the controlling value

6222/7222	7611	AnIn Hi2	w/r	-9.9999e13 ...99999e13	100	Individual characteristic of analog output 2 - upper limit of controlling value
6224/7224	7612	AnOutLo2	w/r	0...24	0	Individual characteristic of analog output 2- lower limit of the controlling value
6226/7226	7613	AnOutHi2	w/r	0...24	20	Individual characteristic of analog output 2- upper limit of the controlling value
6228..6235/ 7228..7235	7614... 7617				0	RESERVED
6236/7236	7618	Param.SD	w/r	0.05 … 95	50	The percentage of the internal archive space used which triggers automatic writing on SD/SDHC card
6238/7238	7619					RESERVED
6240/7240	7620	Primar.U	w/r	0.0001... 99999G		Voltage transformer primary voltage
6242/7242	7621	Second.U	w/r	0.0001... 99999G		Voltage transformer secondary voltage
6244/7244	7622	Primar.I	w/r	0.0001... 99999G		Current transformer primary voltage
6246/7246	7623	Second.I	w/r	0.0001... 99999G		Current transformer secondary voltage
6248...6258/ 7248...7258	7624...7629					RESERVED
6248/7248	7624	Ind.Ch.A	w/r	-99999... 99999G	1	Coefficient „A” of the individual characteristic
6250/7250	7625	Ind.Ch,B	w/r	-99999... 99999G	0	Coefficient „B” of the individual characteristic
6252...6258/ 7252...7258	7626... 7629					RESERVED

Table 42

Value set in the two following 16-bit registers. Registers contain the same data as 32-bit registers from the area 8000.	The value is located in the 32-bit registers.	Name	Write (w)/ readout (r)	Unit	Quantity name

8100/8200	8000		w/r		The value of the 1st register readout by the transducer operating in serial interface Master or Monitor mode
8102/8202	8001		w/r		The value of the 2nd register readout by the transducer operating in serial interface Master or Monitor mode
8104/8204	8002		w/r		The value of the 3rd register readout by the transducer working in serial interface Master of Monitor mode
8106...8197/ 8206...8297	8003... ...8049				The value of the nth register readout by the transducer operating in serial interface Master or Monitor mode
8198/8298	8049		w/r		The value of the 50th register readout by the transducer operating in serial interface Master or Monitor mode

5.9.8 Registers for readout

Table 43

The value is located in the 16-bit registers.	Write (w)/ readout (z)	Range	Unit	Description	
0	r	0...65535	%*100	Basic harmonic of voltage	HarU[1] * 100
1	r	0...65535	%*100	2 harmonic of voltage	HarU[2] * 100
2	r	0...65535	%*100	3 harmonic of voltage	HarU[3] * 100
:	:	:	:	:	
50	r	0...65535	%*100	51 harmonic of voltage	HarU[51] * 100
51...63				RESERVED	
64	r	0...65535	%*100	Basic current harmonic	HarI[1] * 100
65	r	0...65535	%*100	2 harmonic of current	HarI[2] * 100
66	r	0...65535	%*100	3 harmonic of current	HarI[3] * 100
:	:	:	:	:	
114	r	0...65535	%*100	51 harmonic of current	HarI[51] * 100
115...127				RESERVED	
128	r	0...65535	%*100	Harmonic distortion factor of voltage	
129	r	0...65535	%*100	Harmonic distortion factor of current	

Table 44

The value is located in the 16-bit registers.	Write (w)/ readout (r)	Range	Description

4300	r	0...9999	Software version * 100	
4301	r	0...9999	Bootloader version * 100	
4302	r	0...65535	Status no. 1 of the transducer. Describes the current status of the transducer. Successive bits represent the event. Bit set to 1 indicates that the event took place. The events can be only deleted.	
			Bit15 31	Loss of the calibration parameters
			Bit14 30	Real Time Clock – loss of settings – battery failure
			Bit13 29	Clock – daylight saving on/off
			Bit12 28	No communication with data memory
			Bit11 27	Invalid settings
			Bit10 26	Default settings restored
			Bit9 25	
			Bit8 24	Internal archive communication error
			Bit7 23	Archive parameters error
			Bit6 22	No synchronization signal
			Bit5 21	Internal archive 100% full
			Bit4 20	Reset to default settings necessary
			Bit3 19	
			Bit2 18	not used
			Bit1 17	not used
			Bit0 16	not used
4303	r	0...65535	Status no. 2 of the transducer. Describes the current status of the transducer. Successive bits represent the event. Bit set to 1 indicates that the event took place. The events can be only deleted.	
			Bit15	not used
			Bit14	not used
			Bit13	not used
			Bit12	not used
			Bit11	not used
			Bit10	not used
			Bit9	not used
			Bit8	not used
			Bit7	not used
			Bit6	Overrun of output 1 enabled
			Bit5	LED2 – Alarm signal no. 2.
			Bit4	LED1 – Alarm signal no. 1.
			Bit3	not used
			Bit2	not used
			Bit1	State of the alarm 2 relay.
			Bit0	State of the alarm 1 relay.
4304	r	0...5	Memory card status	

			Value	Description
			0	No card
			1	The card inserted but not installed (uninstalled).
			2	Card inserted but the attempt failed.
			3	The card inserted, installed correctly but write-protected. The card is uninstalled automatically when write-protection is detected.
			4	The card inserted and installed.
			5	The card inserted and installed but full.
			6	Card being installed
4305	r		Measurement status	
			bit 0	„0” - measurement synchronization with voltage signal „1” - measurement synchronization with current signal
			bit 1...6	reserved
			bit 7	„1” - voltage signal lower than measurement threshold
			bit 8	„1” - current signal lower than measurement threshold
			bit 9	„1” - voltage signal higher than measurement threshold
			bit 10	„1” - current signal higher than measurement threshold
			bit 11...15	reserved
4306	r		Ethernet interface status	
			bit 0	„1” transducer equipped with the Ethernet system
			bit 1	„1” - automatic link parameter negotiation ongoing
			bit 2	„1” - automatic negotiation successfully completed
			bit 3	„1” - connection completed successfully
			bit 4	„1” - connection parameters acquired from DHCP server
			bit 5	„1” - connection parameter should be refreshed by DHCP server
			bit 6	„1” - Ethernet interface cables successfully connected
			bit 7	„1” - FTP connection successfully completed
			bit 8	„1” - Ethernet interface in energy saving mode
			bit 9	reserved
			bit 10	„1” - Ethernet interface clock - correct operation „0” - no signal for Ethernet interface clock
			bit11...bit15	reserved
4307	r		reserved	
4308	r		Production status 1	
			Bit15 ... Bit0	Serial number (1...99999)
4309	r		Production status 2	
			Bit15… Bit12	RESERVED
			Bit11 … Bit6	Year of production (0...63)

			Bit5 … Bit0	Month of production (0...12)
4310	r		Production status 3	
			Bit15 … Bit14	„01” - high power „10” - low power
			Bit13 … Bit11	„01” - output no. 2 – N/O relay „10” - output no. 2 – out Power 24 VDC
			Bit10 … Bit8	„001” - output no. 3 – N/O relay „010” - output no. 3 – analog current output „011” - output no. 3 – analog voltage output
			Bit7 … Bit5	„000” – accessories – no ext. SD slot, no Ethernet „001” – accessories - ext. SD slot, no Ethernet „010” – accessories - Ethernet interface with internal memory
			Bit4 … Bit3	„01” - main current analog output „10” - main voltage analog output
			Bit2 … Bit0	„001” - voltage output in 100 VAC range „010” - voltage output in 230 VAC range
4311	r		Production status 4	
			Bit15 … Bit7	reserved
			Bit6	„0” - Polish language version „1” - English language version
			Bit5 … Bit0	reserved
4312	r	0...8192	Memory page indicating start of archive	
4313	r	0...8192	Memory page indicating end of archive	
4314	r	0...527	Byte indicating start of archive. Register value indicates the byte on the archive start page marking the start of archive.	
4315	r	0...527	Byte indicating end of archive. Register value indicates the subsequent byte where the archive record will be written.	
4316.. ...4329			RESERVED	
4330		0...65535	Active energy, received, 2 older bytes [10*kWh]	
4331		0...65535	Active energy, received, 2 younger bytes [10*kWh]	
4332		0...65535	Active energy, provided, 2 older bytes [10*kWh]	
4333		0...65535	Active energy, provided, 2 younger bytes [10*kWh]	
4334		0...65535	Passive energy, inductive, 2 older bytes [10*kVAr]	
4335		0...65535	Passive energy, inductive, 2 younger bytes [10*kVAr]	
4336		0...65535	Passive energy, capacity, 2 older bytes [10*kVAr]	
4337		0...65535	Passive energy, capacity, 2 younger bytes [10*kVAr]	
4338		0...65535	Apparent energy, 2 older bytes [10*kVA]	
4339		0...65535	Apparent energy, 2 younger bytes [10*kVA]	

Table 45

Value set in the two following 16-bit registers.	The value				

Registers contain the same data as 32-bit registers from the area 7500.	is located in the 32-bit registers.	Name	Write (w)/ readout (r)	Unit	Quantity name
6000/7000	7500	U	r	V	Voltage
6002/7002	7501	I	r	A	Current
6004/7004	7502	P	r	W	Active power P
6006/7006	7503	Q	r	var	Reactive power Q
6008/7008	7504	S	r	VA	Apparent power S
6010/7010	7505	PF	r		Active power factor
6012/7012	7506	tg	r		Reactive to active power ratio
6014/7014	7507	f	r	Hz	Frequency
6016/7016	7508	P_{DM}	r	W	Active power averaged 15, 30, 60 minutes
6018/7018	7509	S_{DM}	r	VA	Apparent power averaged 15, 30, 60 minutes
6020/7020	7510	I_{DM}	r	A	Current averaged 15, 30, 60 minutes
6022/7022	7511	cos	r		Cosine of the angle between U and I
6024/7024	7512	THD U	r	%	Harmonic distortion factor of voltage
6026/7026	7513	THD I	r	%	Harmonic distortion factor of current
6028/7028	7514	T	r	C	Temperature (optional)
6030/7030	7515	$E_P\leftarrow$	r	Wh	Active import energy (positive)
6032/7032	7516	$E_P\rightarrow$	r	Wh	Active export energy (negative)
6034/7034	7517	E_{QL}	r	varh	Reactive inductive energy
6036/7036	7518	E_{QC}	r	varh	Reactive capacity energy
6038/7038	7519	E_S	r	VA	Apparent energy
6040/7040	7520	$E_P\leftarrow$	r	100 MWh	Active received energy (no. of register 7521 overflows, resets to 0 after reaching 99999999.9 kWh) [range 0...999]
6042/7042	7521	$E_P\leftarrow$	r	kWh	Active received energy (counter counting up to 99999.9 kWh)
6044/7044	7522	$E_P\rightarrow$	r	100 MWh	Active provided energy (no. of register 7523 overflows, resets to 0 after reaching 99999999.9 kWh) [range 0...999]
6046/7046	7523	$E_P\rightarrow$	r	kWh	Active provided energy (counter counting up to 99999.9 kWh)
6048/7048	7524	E_{QL}	r	100 Mvarh	Reactive inductive energy (no. of register 7525 overflows, resets to 0 after reaching 99999999.9 kWh).
6050/7050	7525	E_{QL}	r	kvarh	Reactive inductive energy (counter counting up to 99999.9 kVArh)
6052/7052	7526	E_{QC}	r	100 Mvarh	Reactive, capacitance energy (no. of register 7527 overflows, resets to 0 after reaching 99999999.9 kVArh) [range 0...999]

6054/7054	7527	E_{QC}	r	kvarh	Reactive capacitance energy (counter counting up to 99999.9 kVArh)
6056/7056	7528	E_S	r	100 MVAh	Apparent energy (no. of register 7529 overflows, resets to 0 after reaching 99999999.9 kVAh) [range 0...999]
6058/7058	7529	E_S	r	kVAh	Apparent energy (counter counting up to 99999.9 kVAh)
6060/7060	7530		r	r	Voltage/Current angle
6062/7062	7531				reserved
6064/7064	7532	U_{MIN}	r	V	Minimum voltage
6066/7066	7533	U_{MAX}	r	V	Maximum voltage
6068/7068	7534	I_{MIN}	r	A	Minimum current
6070/7070	7535	I_{MAX}	r	A	Maximum current
6072/7072	7536	P_{MIN}	r	W	Min. active power P
6074/7074	7537	P_{MAX}	r	W	Max. active power P
6076/7076	7538	Q_{MIN}	r	var	Min. reactive power Q
6078/7078	7539	Q_{MAX}	r	var	Max. reactive power Q
6080/7080	7540	S_{MIN}	r	VA	Min. apparent power S
6082/7082	7541	S_{MAX}	r	VA	Max. apparent power S
6084/7084	7542	$_{MIN}$	r		Min. active power factor
6086/7086	7543	$_{MAX}$	r		Max. active power factor
6088/7088	7544	tg_{MIN}			Min. reactive to active power ratio
6090/7090	7545	tg_{MAX}			Max. reactive to active power ratio
6092/7092	7546	f_{MIN}	r	Hz	Min. frequency
6094/7094	7547	f_{MAX}	r	Hz	Max. frequency
6096/7096	7648	P_{DMMIN}	r	W	Active power averaged 15, 30, 60 minutes, min.
6098/7098	7549	P_{DMMAX}	r	W	Active power averaged 15, 30, 60 minutes, max.
6100/7100	7550	S_{DMMIN}	r	VA	Reactive power averaged 15, 30, 60 minutes, min.
6102/7102	7551	S_{DMMAX}	r	VA	Reactive power averaged 15, 30, 60 minutes, max.
6104/7104	7552	I_{MIN}	r	A	Current averaged 15, 30, 60 minutes, min.
6106/7106	7553	I_{DMMAX}	r	A	Current averaged 15, 30, 60 minutes, max.
6108/7108	7554	cos_{MIN}	r		Cosine of the angle between U and I, min.
6110/7110	7555	cos_{MAX}	r		Cosine of the angle between U and I, max.
6112/7112	7556	THD U_{MIN}	r	%	Harmonic distortion factor of voltage, min.
6114/7114	7557	THD U_{MAX}	r	%	Harmonic distortion factor of voltage, max.
6116/7116	7558	THD I_{MIN}	r	%	Harmonic distortion factor of current, min.
6118/7118	7559	THD I_{MAX}	r	%	Harmonic distortion factor of current, max.
6120/7120	7560	T_{MIN}	r	C	Temperature min. (optional)

6122/7122	7561	T_{MAX}	r	C	Temperature max. (optional)
6124...6139 /7124...7139	7562 ...7569				RESERVED
6140/7140	7570	ID	r	-	Constant value identifying the device The value of 194 represents P30P transducer.
6142/7142	7571	Status	r	-	Register describing current transducer state - register value 4302 „Status no. 2”.
6144/7144	7572	Output 1 actuated	r	%	The register linked to the analog output 1 activation.
6146/7146	7573	Output 2 actuated	r	%	The register linked to the analog output 2 activation.
6148/7148	7574	Output 3 actuated	r	%	The register linked to the analog output 3 activation.
6150/7150	7575	Displayed value	r	-	Currently displayed value
6152/7152	7576	Displayed value multiplier	r	-	Exponent of displayed value multiplier
6154/7154	7577	Current time	r	-	Current time
6156/7156	7578	Date - year	r	YYYY	Current date - year
6158/7158	7579	Month, day	r	MMDD	Current date – month, day
6160/7160	7580	Archive fill rate	r	%	Current internal archive memory fill rate
6162/7162	7581		r	-	reserved
61647164	7582	Second value displayed	r		Value displayed on lower LCD line - any register value
6166/7166	7583		r		Free space on SD/SDHC card (kB), value „-1” means no card installed
6168/7168	7584		r		Total space on SD/SDHC card (kB), value „-1” means no card installed
6170...6172/ 7170...7172	7585...7586				RESERVED
6174/7174	7587	Analog value	r	-	Numerical value controlling the analog output 1 of the transducer
6176/7176	7588	Analog value	r	-	Numerical value controlling the analog output 2 of the transducer
6178/7178	7589	Analog value	r	-	Numerical value controlling the analog output 3 of the transducer
6180...6182/ 7180...7182	7590...7591				RESERVED
6184/7184	7592	Status no. 1	r	-	Register value 4301 projected onto the floating-point value
6186/7186	7593	Status no. 1			Register value 4302 projected onto the floating-point value
6188/7188	7594		r	-	RESERVED
6190/7190	7595		r		Rescaling value on voltage input

6192/7192	7596		r		Rescaling value on current input
6194..6198 /7194..7198	7597...7599				RESERVED

5.10. Ethernet interface 10/100-BASE-T

P30P transducers in P30P-XX2XXXXXX version are equipped with an Ethernet interface for connecting the device (using the RJ45 socket) to the local or global network (LAN or WAN) and using transducer's net services: web server, FTP server, Modbus slave TCP/IP. Configure Ethernet group parameters to use the transducer network services. Standard Ethernet parameters of the transducer are shown in Tab. 17. IP address is the main web parameter of the transducer, by default it is 192.168.1.30, but must set to unique value within a network the device is connected to. The IP address can be assigned to the transducer automatically by the DHCP server present in the network if the transducer has an option to obtain an address from DHCP server enabled: Ethernet → DHCP → On. If the DHCP service is disabled then the transducer will work with the default IP address allowing the user to change the IP address, e.g. from the transducer menu. Every change of transducer's Ethernet parameters requires confirmation of the parameter change, e.g. from Ethernet → ReInitEt → Yes menu or by entering value "1" into register 4099. The Ethernet interface is rebooted in accordance with the new parameters after applying changes - all services of the Ethernet interface are restarted.

Note: Transducer allows for up to 4 simultaneous connections! Applications prebuilt in the transducer use 1 or 2 connections:

- modbus TCP/IP - 1 connection
- web server - 1 connection
- FTP server - 2 connections

5.10.1 Connecting 10/100-BASE-T interface

Connect the device to a TCP/IP network using the RJ45 socket located at the front of the transducer to access the Ethernet services.

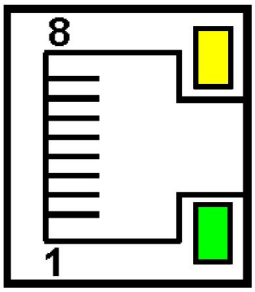

Fig. 23 View and pin numbering of the RJ45 socket

RJ45 socket LEDs description:

- yellow LED lights up when the transducer is properly connected to the Ethernet 100 Base-T and

is off when the transducer is not connected to a network or is connected to a 10-Base-T.

- green LED Tx/Rx, blinks irregularly whenever the transducer is sending and receiving data, lights up continuously when no data is transmitted

It is recommended to use a twisted pair cable to connect the transducer to the network:

- U/FTP – twisted pair cable with a separate foil for every pair
- F/FTP – twisted pair cable with separate foil for every pair and additional foil shielding for the cable
- S/FTP (former SFTP) – twisted pair cable with separate foil for every pair and additional mesh cable shielding
- SF/FTP (former S-STP) – twisted pair cable with separate foil for every pair and additional mesh and foil cable shielding

The twisted pair cable categories according to the European standard EN 50171 are minimum: Class D (category 5) - for high-speed local area networks, includes the applications using the frequency band up to 100 MHz. Connection was described in Tab. 46. For Ethernet connection use the category 5 STP type twisted-pair cable (shielded) with RJ-45 connector, wiring colors (according to Tab. 46), compliant with the following standards:

- EIA/TIA 568A for both connectors in strike-through connection between P30P and hub or switch,
- EIA/TIA 568A for the first connector and EIA/TIA 568B for the second one in the cross-over connection (i.e. when connecting the P30P transducer to the PC).

Table 46

Wire no.	Signal	Wire color according to the standard	
		EIA/TIA 568A	EIA/TIA 568B
1	TX+	white-green	white-orange
2	TX-	green	orange
3	RX+	white-orange	white-green
4	EPWR+	blue	blue
5	EPWR+	white-blue	white-blue
6	RX-	orange	green
7	EPWR-	white-brown	white-brown
8	EPWR-	brown	brown

5.10.2 Web Server

P30P transducer provides its own web server which enables remote monitoring of the measuring values, remote configuration and reading a transducer status. A web page allows in particular to:

- obtain information about the device (serial number, code execution, software version, bootloader version, version (standard or special)
- preview current measuring values
- read a device status
- select the web page language

You can access the web server via web browser by entering the IP address of the transducer, e.g.: http://192.168.1.30 (where 192.168.1.30 is current IP address of the meter). The default web server port is the port "80". The server port can be changed by the user.

Note: A browser with JavaScript enabled and compatible with XHTML 1.0 is required for correct operation of the website (all popular browsers, Internet Explorer version 8 minimum).

5.10.2.1. General view

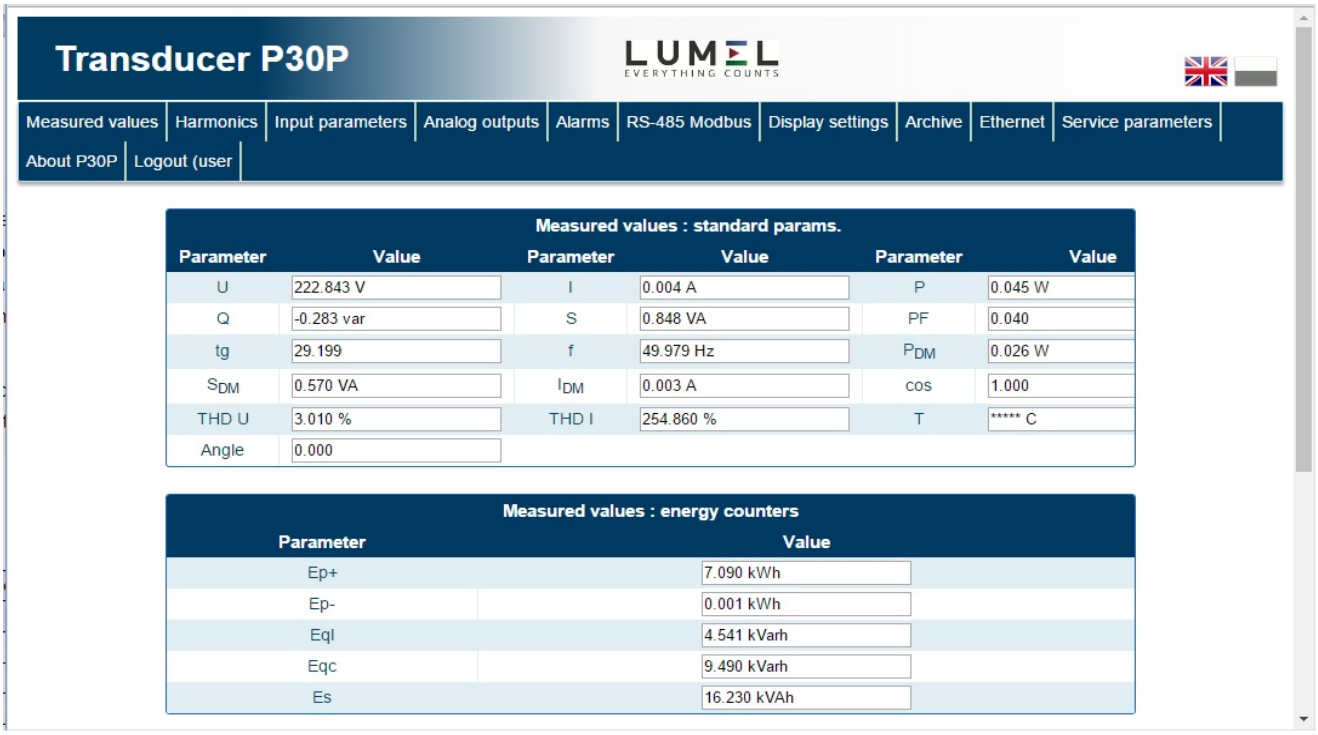

Fig. 24 Transducer WWW page

5.10.2.2. Web user selection

The transducer has two user accounts for the web server protected by the individual passwords:

- user: „**admin**”, password: „**admin**” - access to the configuration and preview of the parameters
- user: „**user**”, password: „**pass**” - access to parameters preview only.

Entering the transducer IP address into a browser, e.g. http://192.168.1.30 will display a startup website to enter the user name and password.

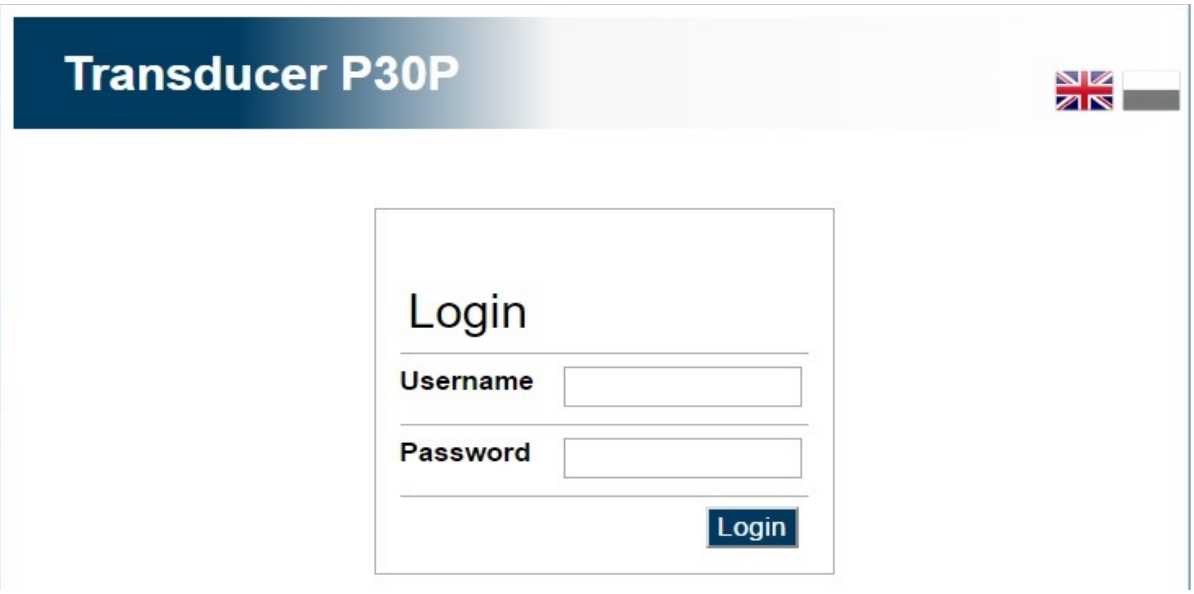

Fig. 25 View of the transducer web server login window

The web server user names can not be changed but you can change the password for each user - for safety reasons it is recommended to change the passwords. Changing the password is possible only through a web page in the "Ethernet" parameter group. The passwords can be up to 8 characters. If the password is lost (what disables using the web server), restore the default settings of the Ethernet interface e.g. from the menu: `Ethernet` → `EthStdPa` → `Yes`, or by entering the value "1" to the register 4080. All standard Ethernet interface parameters (see Tab. 17) and the passwords of the FTP server users will be restored:

user „**admin**" → password: „**admin**";
user "**user**" → password "**pass**".

The session lasted five minutes opens when you log in to the web server. After five minutes a user will be automatically logged out from a web server. The change of the group parameters renews time to expiry of the session.

5.10.3 FTP Server

The FTP file sharing protocol has been implemented in the P30P transducers. The transducer acts as a server, allowing the users to access the internal memory of its file system. Access to the files is possible using a computer, a tablet with installed FTP client or other device acting as a FTP client. The standard FTP ports are used for transferring files, "20" - data port and "21" -- commands port. A user can change the port used by the FTP protocol if necessary. Please note, that the port configuration of the FTP server and the client must be the same.

It is recommended to set the FTP client in the passive mode, because the connection is then fully configured by the FTP client (a client chooses the data port). Only one connection at one time can

be used for the file transfer, so the maximum number of a FTP client connections should be set to "1".

5.10.3.1. FTP user selection

The transducer has two FTP server user accounts protected by individual passwords:

- user: „**admin**”, password: "**admin**” - access to read and write the files
- user: „**user**”, password: "**passftp**” - access to read only the archive files.

The FTP user names can not be changed but you can change the password for each user - for safety reasons it is recommended to change the passwords. Changing the password is possible only through a web page in the "Ethernet" parameter group. The passwords can be up to 8 characters. If the password is lost (what disables using the FTP server), restore the default settings of the Ethernet interface e.g. from the menu: `Ethernet` → `EthStdPa` → `Yes`, or by entering the value "1" to the register 4080. All standard Ethernet interface parameters (see Tab. 17) and the passwords of the FTP server users will be restored:

user „**admin**” → password: „**admin**”;
user "**user**” → password "**passftp**”.

Internet browser can be used as a rudimentary FTP client. By entering the IP address of transducer with the “ftp” header into the address field, e.g.: ftp://192.168.1.30 it is possible to browse and download archive files from the Internet browser directly.

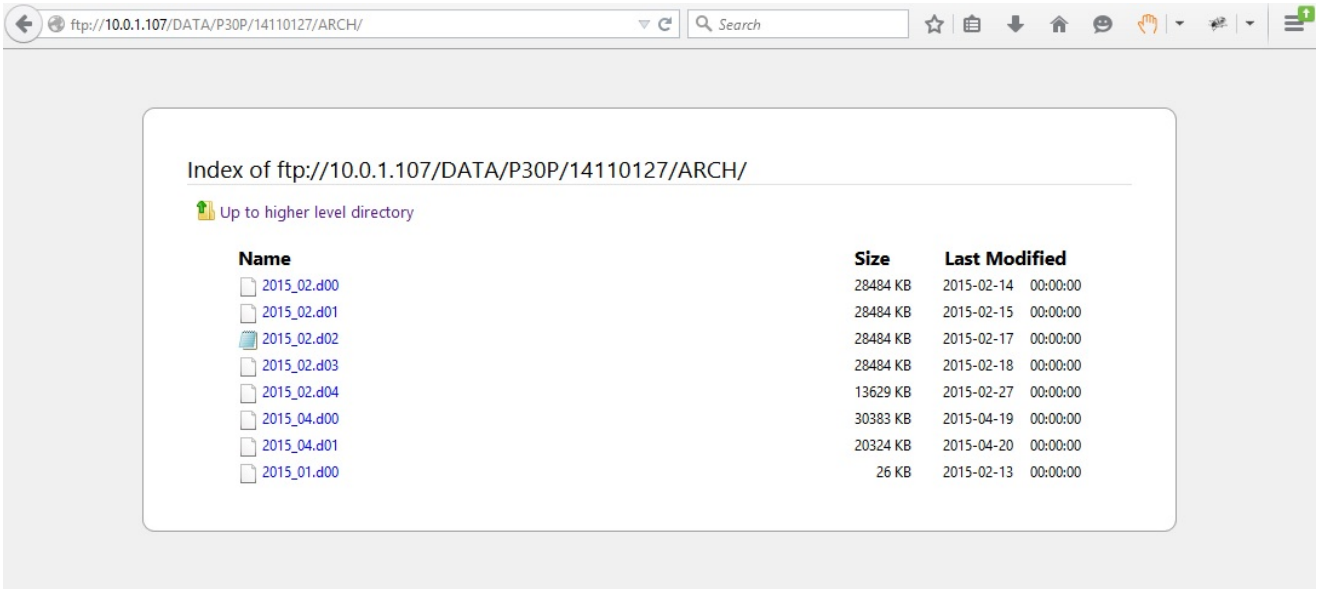

Fig. 26 View of the FTP session in browser window

5.10.4 Modbus TCP/IP

P30P transducers allow access to the internal registers via the Ethernet interface and Modbus TCP/IP Slave protocol. Modbus protocol functions and register structure are described in section 5.9.3 - 5.9.6. It is necessary to set the unique IP address of the transducer and the connection parameters listed in Tab.45 to set up a connection.

Table 47

Symbol	Description	Default value
AddrmTCP	Device address for Modbus TCP/IP protocol	1
PortMbus	Modbus TCP port number	502
TimeMbus	Port closing time of Modbus TCP/IP service [s]	60
no.c.TCP	The maximum simultaneous connections to Modbus TCP/IP service	2

Device address (Ethernet → AddrmTCP) is Modbus TCP/IP protocol device address and is not identical to the corresponding value of Modbus RS-485 protocol (Mbus 485 → Adres). When AddrmTCP parameter is set to „255", the transducer will skip address analysis in the Modbus protocol frame (announce mode).

6. Accessories

In case of the transducer version P30P-XX1XXXXXXX using SD/SDHC cards, it is possible to order industrial-grade SD cards with the capacity suited to the user's needs, as shown in the table below. **It is not recommended to use commercial-grade cards** due to high parameter differences and short life span.

Table 48

Item	Order code	Capacity
1	20-199-00-00023	1 GB
2	20-199-00-00025	2 GB

7. Error codes

During the transducer's operation, various error messages might be displayed on the display. The table below lists the error codes which are possible to be displayed and their reasons as well as the recommended user responses.

Table 49

Message	Description
Err FRAM Service	Calibration parameters memory error - send the transducer for maintenance, message blocks the display of measured values
Err DF	Archive internal memory error - measurement archiving is not possible, transducer can operate, it is recommended to send the transducer for maintenance; message does not block the display of measured values – it is

	displayed in cycles.
Err Cal.	No calibration parameters - send the transducer for maintenance, message does not block the display of measured values – it is displayed in cycles.
Err Batt Service	Real Time Clock battery voltage too low – RTC settings will be deleted after the transducer is powered off, transducer can operate, it is recommended to send the transducer for battery change; message does not block the display of measured values – it is displayed in cycles, setting of date or time turns the message off.
Err Par.	Parameters error – transducer settings error, return to factory defaults, transducer can operate but it is not recommended until the factory settings are reverted, message does not block the display of measured values – it is displayed in cycles
Error file	Attempt to read the file from external SD/SDHC or file system internal memory failed – no file present, or invalid file format, transducer can operate, message does not block the display of measured values – it is cycled approx. every 20 seconds.

8. Technical data

Input:

Table 50

Measuring value		Measuring range K_U=1, K_I=1	Class (1s)
RMS current **I, I_{DM}** 1 A 5 A		0.01 ...1...1.200 A~ 0.05 ...5... 6.000 A~	±0.2 %
RMS voltage **U**, 100V 230V (depends on ordering code)		6... 100...120 V 12.5 ..230.. 300 V	±0.2 %
Frequency **f**		2....40.0 .. 60.0 .. 100 Hz	±0.1 %
Active power **P** [W] Reactive power **Q** [var]	1A, 100V	-144..-100 ... 100..144	±0.5 % [W] ±0.5 % [var]
	5A, 100V	-720..-500 ... 500..720	
	1A, 230V	-360..-230 ... 230..360	
	5A, 230V	-1800..-1150 ... 1150..1800	
Apparent power **S**	1A, 100V	0 ... 100..144	±0.5 % [VA]
	5A, 100V	0 ... 500..720	

	1A, 230V	0 ... 230..360	
	5A, 230V	0 ... 1150..1800	
Active power factor **pf**		-1 .. 0 .. 1	±0.5 %
Tangent φ		-1.2 .. 0 .. 1.2	±1 %
Angle between U, I		-180°...180°	±1 % (for φ ≠ <-5°...5°, I > 10% I_N, U >10%U_N)
Active energy (+/-), apparent		0 .. 9 999 999.9 kWh	±0.5 %
Reactive energy		0 .. 9 999 999.9 kvarh	±1.0 %
THD		0...100%	±5 %

K_U - voltage ratio, **K_I** – current ratio

During semi-indirect and indirect measurements of I, U, P, Q and S, maximum range of values displayed on the LCD is -99999G...99999G. Ranges depend on the transformer input and output parameters (U prim., U sec, I prim., I sec).

- minimum voltage measurement synchronization 12.5V (version 230V), 6V (version 100V)
- minimum current measurement synchronization 100 mA

Outputs:

Main analog output OUT1

- analog, programmable, galvanically isolated
  - * current I_{OUT} = 0/4...20 mA, load resistance ≤ 500 Ω; or
  - * voltage U_{OUT} 0...10 V, load resistance ≥ 500 Ω,
- analog output class 0.1;
- processing time < 200 ms
- overload 1.2 $I_{OUT,}$ or 1.2 $U_{OUT,}$

Additional analog output (OUT2, interchangeably with relay output)

- 1 analog output (interchangeably with alarm output)
  - * current I_{OUT} = 0/4...20 mA, load resistance ≤ 250 Ω; or
  - * voltage U_{OUT} 0...10 V, load resistance ≥ 500 Ω,
- class 0.5
- processing time < 500 ms
- overload 1.1 $I_{OUT,}$ or 1.1 $U_{OUT,}$

Alarm outputs

- relay – 1 or 2 relays; volt-free NO contacts – max. load capacity 5 A 30 VDC, 250 VAC; 100,000 switching cycles

Digital output – RS-485 interface:

- transmission protocol: Modbus RTU
- address: 1...247
- mode: 8N2, 8E1, 8O1, 8N1
- max. response time: 200 ms [1]
- min. interval between successive queries 5 ms

Ethernet interface: 10/100-Base-T

- max. simultaneous connections 4

Power output

- auxiliary supply (optional - interchangeably with alarm output A2) 24 VDC / 30 mA.

Power consumption <5 VA

Weight < 0.25 kg

Dimensions 120 x 45 x 100 mm

Fixing 35 mm rail acc. to EN 60715

Protection grade ensured by the housing

from housing side (version without a support of SD/SDHC cards)	IP40
from housing side (version with a support of SD/SDHC cards)	IP30
from terminals side	IP20

Readout field LCD text display 2x8 characters with LED illumination

Preheating time of the transducer 15 min

[1]the response time can be extended to 500 ms while writing data to the SD card

Registration

Registration to the internal memory of 4MB (max. 534336 records) - registration with time stamp, ordering versions with the external SD/SDHC card slot allow for automatic saving the internal archive to the SD/SDHC card; ordering versions with Ethernet interface and file system internal memory allow for automatic saving the internal archive into files.

Reference and rated operating conditions

- supply voltage 85...253 V a.c (40..400 Hz)., 85...300 V d.c. or 20..40 V a.c.(40..400 Hz), 20...60 V d.c.
- ambient working temperature -25..23..+55 °C
- storage temperature -30..+70 °C
- humidity 25...95% (no condensation)

- working position any

Additional errors:

- for THD > 8% < 100% of class for the measuring inputs
- from temperature changes: for analog output 50% of class / 10 K
  for measuring inputs 100% of class / 10 K

Short-term overload (5s)

- voltage input 2Un
- current input 5A 10In
- current input 1A 50In

Max. peak factor

- voltage input 1.4
- current input 5A 1.4
- current input 1A 7

Standards compliance:

Electromagnetic compatibility:

- Noise immunity acc. to EN 61000-6-2
- Noise emission acc. to EN 61000-6-4

Safety requirements:

according to EN 61010-1 standard

- Insulation between circuits (P30P-XX0XXXXXXX, P30P-XX1XXXXXXX):
  - increased between input circuits (terminals 1-5) and remaining circuits (60s/3.51 kVAC)
  - basic between all remaining circuits (1min/2.21kVDC)
- Insulation between circuits (P30P-XX2XXXXXXX,):
  - increased between input circuits (terminals 1-5) and remaining circuits (60s/3.51 kVAC)
  - basic between all remaining circuits (1 min/2.21 kVDC)), save for ordering version:
    P30P-XX2X2XXXXX – insulation between power output 24 VDC (terminals 11, 12) and Ethernet slot (60s/1.4 kVAC)
- installation category III,
- pollution grade 2,

- maximum phase-to-earth operating voltage: 300 V for supply and measurement circuits and 50 V for other circuits.

  1 analog output (interchangeably with alarm output), current (0/4...20 mA, load resistance ≤ 250 Ω) or voltage (0...10 V, load resistance ≥ 500 Ω), class 0.5,

- altitude a.s.l. < 2000

12. Ordering code

Table 44

P30P transducer	X	X	X	X	X	X	XX	X	X
Inputs									
voltage 100V, current 1/5 A	1								
voltage 230V, current 1/5 A	2								
Analog output OUT1									
current (0/4...20 mA)		1							
voltage (0...10 V)		2							
Optional accessories									
none			0						
Slot of the external memory SD/SDHC			1						
Ethernet interface with internal memory file system			2						
Output OUT2									
Relay A1, 5A 30V d.c., 250V a.c.				1					
Analog current output (0/4...20 mA)				2					
Analog voltage output (0...10 V)				3					
Output OUT3									
Relay A2, 5A 30V d.c., 250V a.c.					1				
Power output 24 V d.c. / 30 mA.					2				
Supply									
85...253 V a.c., 85...300 V d.c.						1			
20...40 V a.c., 20...60 V d.c.						2			
Version									
standard							0		
special **							XX		
Language									
Polish								P	
English								E	
other								X	
Quality inspection tests									
Without extra requirements									0
Quality inspection certificate									1
With calibration certificate									2
Acc. to customer's request									X

** as per agreement with the manufacturer

Code example:

P30P 11112100E1 *designates the standard transducer for the 100V input range with analog current output, capable of using external SD/SDHC cards, with the relay output and 24 V/30 mA power output, using 85...235 V AC/DC power supply. , English language, with the Quality Assurance approval.*

LUMEL
EVERYTHING COUNTS

LUMEL S.A.
ul. Sulechowska1, 65-022 Zielona Góra, POLAND
tel.: +48 68 45 75 100, fax +48 68 45 75 508
www.lumel.com.pl

Export department:
tel.: (+48 68) 45 75 139, 45 75 233, 45 75 321, 45 75 386
fax.: (+48 68) 32 54 091
e-mail: export@lumel.com.pl

P30P-09B