EUROTEC
TECNOLOGIE IMPIANTISTICHE - AUTOMAZIONE - TELECONTROLLO

LUMEL
EVERYTHING COUNTS

PULSE, FREQUENCY AND RUNNING TIME TRANSDUCER

P30O

USER'S MANUAL

CE

Table of contents

1. APPLICATION 6
2. TRANSDUCER SET 8
3. BASIC REQUIREMENTS, OPERATIONAL SAFETY 8
4. INSTALLATION 9
4.1. Mounting method 9
4.2. External connections diagrams 10
4.3. Connection examples 12
5. OPERATION 14
5.1. P30o transducer front panel description 14
5.2. Messages after switching on the power 15
5.3. Key functions 16
5.3.1. Individual key functions 16
5.3.2. Functions of key combinations 18
5.3.3. Programming matrix 20
5.4. Programming transducer parameters 21
5.4.1. Changing the value of the selected parameter 28
5.4.2. Changing floating-point values 28
5.4.3. Programmable transducer parameters 29
5.5. Transducer functions 48
5.5.1. Measurement inputs 48
5.5.1.1. Standard measurement input types 49
5.5.1.2. Special measurement input types 51
5.5.1.3. Averaging time of measured values 58
5.5.1.4. Filtering input signals 58

5.5.1.5. Maximum measurement time 59
5.5.1.6. Automatic reset of counter values 62
5.5.1.7. Maximum and minimum values of measured signals 62
5.5.1.8. Mathematical operations on measured values 63
5.5.1.9. Scaling with a constant value..... 66
5.5.1.10. Mathematical functions 66
5.5.1.11. Input correlation..... 66
5.5.1.12. Input individual characteristic 67
5.5.1.13. Displayed value range limitation 69
5.5.1.14. Example of transducer configuration..... 69
5.5.2. Analog output 73
5.5.2.1. Analog output individual characteristic 73
5.5.2.2. Analog output overflow management 75
5.5.3. Alarm and power outputs 78
5.5.4. LCD display 80
5.5.4.1. Custom unit definition 82
5.5.4.2. Displaying two values with their units..... 82
5.5.5. Writing and reading transducer configuration from file..... 84
5.5.5.1. Storing the transducer configuration file..... 85
5.5.5.2. Reading the transducer configuration file 85
5.6. Default settings 86
5.7. Firmware update..... 91
5.8. Archiving measured values 93
5.8.1. Transducer memory structure 93
5.8.2. Internal memory..... 94
5.8.2.1. Record structure 95
5.8.2.2. Downloading archived data from the internal memory 96

5.8.3. Archiving configuration 97
5.8.4. Memory card or internal file system memory (option) 100
5.8.5. Archive file structure 102
5.9. RS-485 Interface 104
5.9.1. Serial interface connection 104
5.9.2. MODBUS protocol description 105
5.9.3. Description of the implemented functions 106
5.9.4. Register map 110
5.9.5. Read and Write registers 112
5.9.6. Read-only registers 140
5.10. 10/100-BASE-T Ethernet interface 148
5.10.1. Connecting 10/100-BASE-T Ethernet interface 148
5.10.2. WWW server 150
5.10.2.1. Website general view 151
5.10.2.2. WWW user selection 151
5.10.3. FTP Server 153
5.10.3.1. FTP user selection 153
5.10.4. TCP/IP Modbus 155
6. ACCESSORIES 156
7. ERROR CODES 156
8. TECHNICAL SPECIFICATIONS 158
9. ORDERING CODE 162

1. APPLICATION

The programmable transducer P30o type has been designed to convert the number of pulses, frequency, period, running time and encoder position into a standard direct current or direct voltage. The transducer has also been fitted with a signal setting function. The output signal is galvanically isolated from the input signal and power supply. The transducer is fitted with a 2x8 LCD screen.

Features of the P30o transducer:

- 2 independent, universal measurement inputs separated galvanically,
- binary inputs controlling the operation of the main input separated galvanically from inputs,
- controlling the main counter operation via transducer keypad,
- auto counter resetting at preset value,
- filtering input signal used in conjunction with mechanical setters,
- converting measured values into any output signal based on an individual linear characteristic,
- calculating measured values using one of five implemented mathematical functions,
- calculating measured values based on a 21-point individual characteristics,
- one or two NO (normaly open) relay alarms operating in 6 modes,
- auxiliary power supply 24V DC 30mA switched on/off by software (options),
- indication of exceeding the alarm values set,
- programming alarm and analog outputs with a reaction to selected input value
- (main input, auxiliary input or RTC),
- real time clock (RTC) with independent battery supply,
- recording the input signals in programmed time periods in the internal memory and on an SD/SDHC card (option),
- internal archive memory with 534336 record capacity,
- automatic decimal point setting,

- preview of preset parameters,
- password protected parameter change,
- RS-485 interface support with the MODBUS protocol in RTU mode,
- programmable averaging time,
- SD/SDHC memory cards support – compatible with FAT and FAT32 file system (option),
- 10/100 BASE-T Ethernet interface (option)
  - protocol: Modbus TCP/IP, HTTP, FTP,
  - services: WWW server, FTP server, DHCP client.

Fig. 1. Various variants of P30o transducer

2. TRANSDUCER SET

- transducer set 1 pcs.
- user's manual 1 pcs.
- guarantee card 1 pcs.
- plug-able screw terminal blocks 4 pcs.

3. BASIC REQUIREMENTS, OPERATIONAL SAFETY

The transducer meets the requirements of EN 61010-1 standard in terms of operational safety.

Safety precautions:

- The assembly and installation of electrical connections must be carried out by a person authorized to install electrical equipment.
- Before switching the transducer on, one must check the correctness of connections.
- The device is destined to be installed and used in industrial electromagnetic environment conditions.
- The building installation should be equipped with a switch or an automatic circuit breaker located near the device, which should be easy accessible by the operator and properly marked
- Removal of the transducer housing during the warranty period may cause its invalidation.

4. INSTALLATION

4.1. Mounting method

P30 transducers should be mounted on a 35 mm rail bracket according to EN 60715. Dimensions and method of mounting hare shown in figure 2.

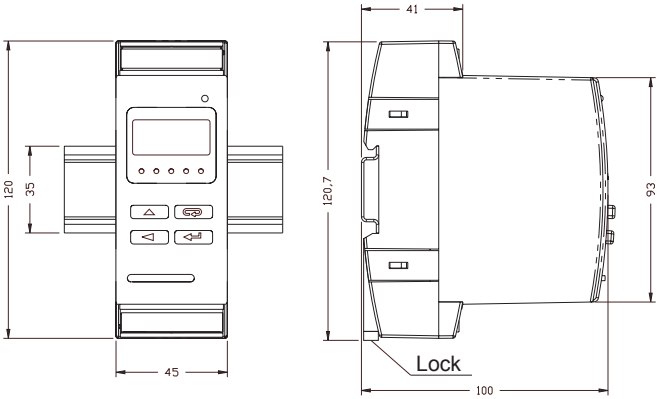

Fig. 2. Overall dimensions and method of mounting the transducer

4.2. External connections diagrams

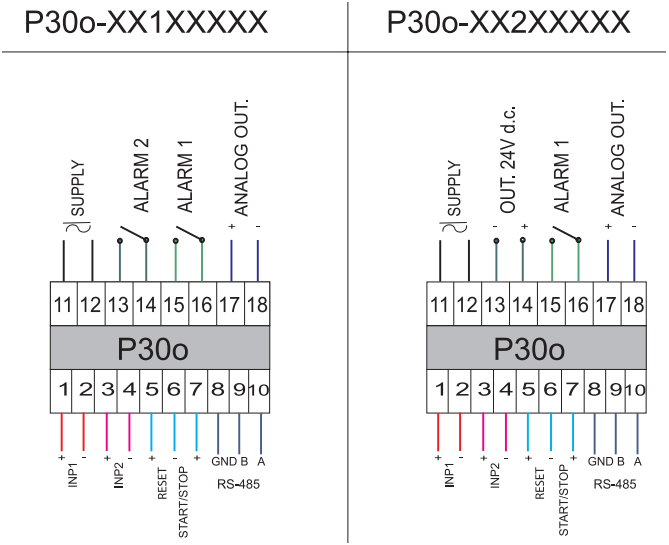

Fig. 3. External connections diagram of the P30o transducer

Shielded cables should be used for connecting input signals in environments with high level of perturbations. Physical measurement inputs have been marked with INP1 and INP2 symbols, these are the physical transducer inputs corresponding, respectively, to the **main input** and the **auxiliary input** defined for the purposes of transducer configuration. The main input and the auxiliary input have been divided into types depending on the measured physical value. An exception to that are types of inputs from the main input group that physically use two external input signals: Counter IN1-IN2 and Encoder. The method of using physical measurement inputs depending on the selected type of the main input or the auxiliary input has been shown in table 1. Detailed information on types and functions of measurement inputs have been discussed in section 5.5.1.

Table 1

	Used physical inputs		No. of terminals required for connection	
Input type	**Main input**	**Auxiliary input**	**Main input**	**Auxiliary input**
Pulse Count.	INP1	WE2	1,2	3,4
Freq. f<10kHz				
Rotary speed				
Period T<20s				
Period T<1,5h				
Freq. f<1MHz				
Running time	INP1 (high level on INP1 required for counting running time)	WE2 (high level on INP2 required for counting running time)		
Current time	none	none	none	none
Setting Value	-	none	-	
Counter IN1-IN2	INP1, INP2	-	1,2,3,4	-
Encoder				-

Inputs marked with symbols “START/STOP” and “RESET” are control inputs (for main inputs counter type).

4.3. Connection examples

An example connection between P30o transducer and inductive sensor with NPN or PNP output type is shown on fig. 4. The method of connecting the transducer with contactron/relay type outputs is shown on fig. 5. Examples show the connection of both main auxiliary inputs for measuring the same signal. Voltages controlling the inputs should be within 5...24 V DC range.

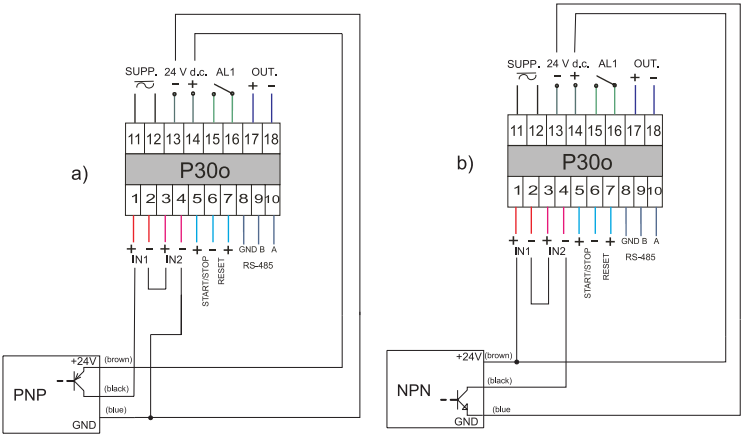

Fig. 4. Connection diagram for the sensor with an OC output: a) PNP type, b) NPN type

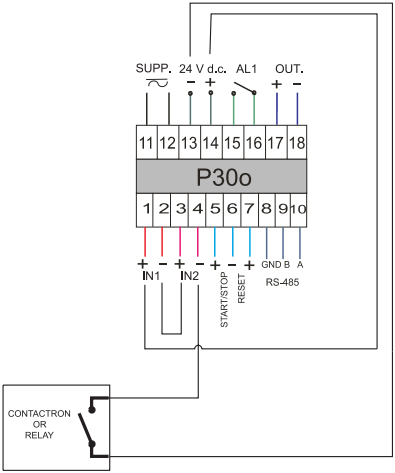

Fig. 5. Connection diagram for the sensor with a contactron/ relay type output

5. OPERATION

5.1 P30o transducer front panel description

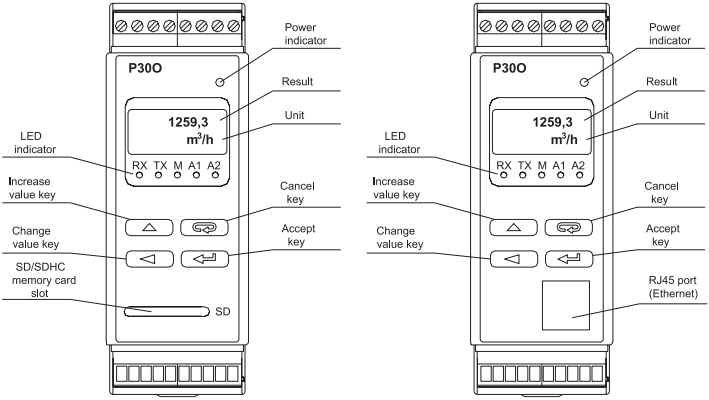

Fig. 6. Front panel description

Note: The memory card (option) should be inserted to the transducer slot with contacts facing down.

LED indicator description:

RX – green diode – Date reception on RS-485 indicator

TX – yellow diode – Date transmission on RS-485 indicator

M – red diode – full internal memory indicator or writing file to SD/SDHC memory indicator, when the internal memory usage exceeds 95%, the diode is constantly on, if the transducer operates with an installed memory card, then the LED flashes when Date is being written on the card.

A1 – red diode – indicator of switching on the first alarm

A2 – red diode – indicator of switching on the second alarm or 24V d.c. power supply

Power indicator – green diode.

5.2. Messages after switching on the power

After connecting external signals and switch the power supply on which is signalled with a green LED (power indicator), the transducer displays the type, current firmware version and the serial number. If the transducer is equipped with Ethernet interface (P30o-X2XXXXXX) IP address is displayed after serial number (stored in memory or received from the DHCP server).

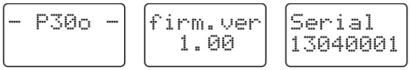

Fig. 7. Start-up messages of a transducer not equipped with an Ethernet interface

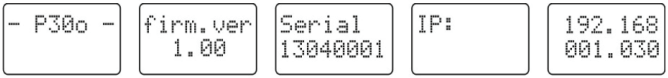

Fig. 8. Start-up messages of a transducer equipped with an Ethernet interface

After about five seconds, the transducer automatically switches to operating mode; it makes a measurement and converts it into an analog output signal. It displays the measured value in the top row of the display and auxiliary information in the bottom row of the display (section 5.5.4). The LED indicator signals the transmission status on the RS-485 interface, status of the internal memory use and alarm states. If transducer is equipped with an Ethernet interface, Ethernet services start-up: WWW server, FTP server, TCP/IP Modbus.

5.3. Key functions

5.3.1. Individual key functions

[↵] - accept key

- enters programming mode (hold for about 3 seconds).
- navigates the menu – level select,
- enters parameter value change mode,
- accepts the changed parameter value,
- changes the content displayed in the lower line of the display
- switching the transducer power supply on while holding this key enters the software update mode through the RS-485 interface, connection parameters: rate 9600 kb/s, mode 8N2.

[▲] - increase value key

- displays the maximum value of the main input
- enters the parameters group level,
- navigates the selected level
- changes the value of a selected parameter – increase value,

- changes the preset value when the auxiliary input type Setting Value is selected, increases the current setter value by the absolute setter step, (see section 5.5.1.2),

◄ - change digit key

- displays the minimum value of the main input,
- enters the parameters group level,
- navigates the selected level,
- changes the value of a selected parameter – switches to the subsequent digit,
- changes the preset value when the auxiliary input type Setting Value is selected, decreases the current setter value by the absolute setter step, (see section 5.5.1.2),
- switching the transducer power supply on while holding this key enters the software update mode through the RS-485 interface, connection parameters: rate 15200 kb/s, mode 8N2.

↩ - cancel key

- enters the transducer parameters preview menu (hold for about 3 seconds),
- exits the transducer parameters preview menu,
- changes the content displayed in the lower line of the display,
- cancel the parameter change,
- completely cancels the programming mode (hold for about 3 seconds).
- switching the transducer power supply on while holding the key forces reading transducer configuration from ***P30O_PAR.CON*** file stored on an external SD/SDHC memory card or in the internal file system memory (depending on the manufacturing variant).

5.3.2. Functions of key combinations

- hold for about 3 seconds

- clear alarm indication; this action works only when the alarm indication memory function is switched on;

- hold for about 1 second

- the main input counter value reset - if the keypad counter control function is switched on and the reset procedure is set, the transducer will sequentially display at the upper line of the display the message about reset and the permission status for resuming pulse counting

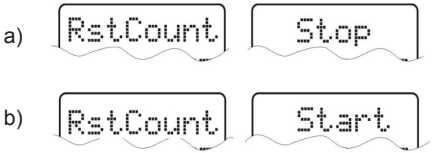

Fig. 9. Messages after reset the main input counter using the key combination, a) if the counter is stopped after the clearing b)if the counter is not stopped after the clearing

- hold for about 1 second

- stops counting on main input counter if the counting has been switched on before – works only if the keypad control counter function is switched on; after the counter is stopped the message about stopping the counter will be displayed on the upper display line

Fig. 10. Message that the main counter is being stopped

- start counting on main input counter if the counting has been switched off before - works only if the keypad control counter function is switched on; after the counter is switched on the message about starting the counter will be displayed on the upper display line

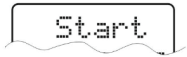

Fig. 11. Message that the main counter is switched on

▲ ◄ - hold for about 1 second

- clears the maximum and minimum value for the main input

↵ ▲ - hold for about 1 second

- unmounts the SD/SDHC memory card enabling safe removal – for transducer equipped with an external SD/SDHC memory slot

↵ ◄ - hold for about 1 second

- force start copying the archive from the internal memory into the SD/SDHC memory card – for transducer equipped with an external SD/SDHC memory slot
- force start copying the archive from the internal memory to the file system memory – for transducer equipped with an Ethernet interface; this action enables downloading current archive Date files from the transducer via FTP protocol

Push and hold the programming key ↵ for about 3 seconds to enter the programming matrix. The programming matrix can be protected with a safety code

5.3.3. Programming matrix

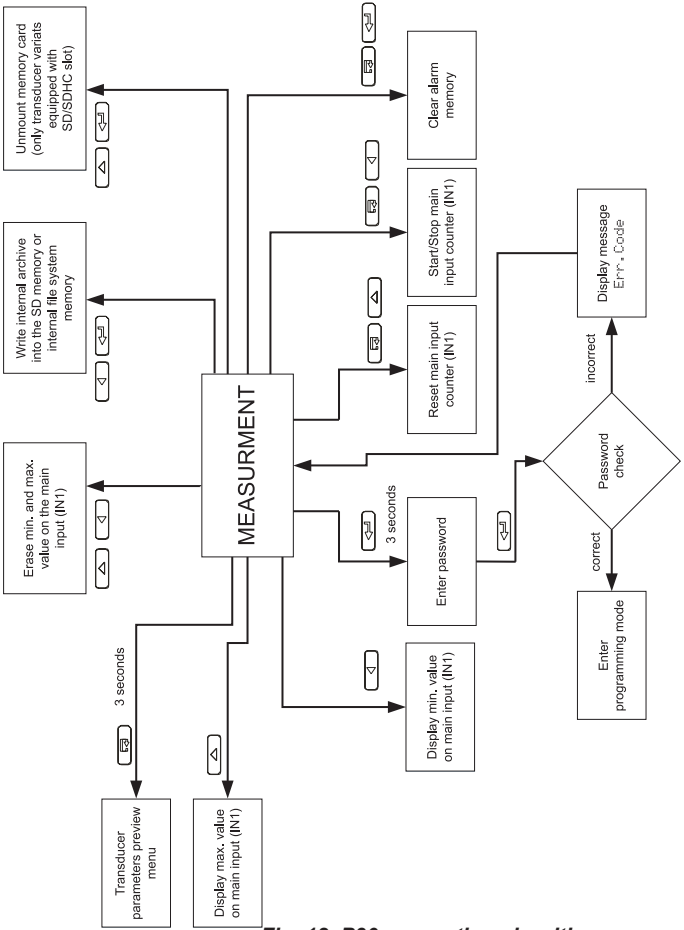

Fig. 12. P30o operation algorithm

5.4. Programming transducer parameters

Press and hold for about 3 seconds [↵] key to enter the programming matrix. If access is password protected, transducer will ask for password. If the entered password is incorrect, Err.Code message will be displayed. Correct password enables access to the programming matrix. Fig. 12 shows the matrix in the programming mode. Use [▲] or [◄]. to select the menu level or navigate the parameters of a given sub-level. The parameter symbol is displayed at the upper line of the display, while the parameter is displayed at the lower line of the display. Press [↵] to edit parameter. Press [↩] to cancel changing parameter. Press and hold [↩] to exit the programming matrix and enter the measurement mode. If the transducer remains inactive for 30 seconds in the parameter programming mode, it will exit the programming mode and display the displayed value.

Settings Main Inp Main input parameters	Input Measured value type	AvgTime Measured value averaging time	Scale Selection of the input value scaling mode	ScaleVal Constant scaling input value	Ext.Func External functions mode
		MaxTime Maximum time of periodic signal measurement	AutoRst. Automatic reset counter threshold	Correlat Selection of the dependence between the main input and the auxiliary input	
Settings Ind.Char Individual char. acteristic parameters	Point No Number of individual char. points	X1 The first point of the individual char. Point x	Y1 The first point of the individual char. Point y.	....	X21 The last point of the individual char.
Settings Aux Inp. Auxiliary input parameters	Input Measured value type	AvgTime Measured value averaging time	Scale Selection of the input value scaling mode	ScaleVal Constant scaling input value	Ext.Func External functions mode
		MaxTime Maximum time of periodic signal measurement	AutoRst. Automatic reset counter threshold		
Ustawien Char.In2 Parametry ch-ki indywidualnej	Point No Number of individual char. points	X1 The first point of the individual char. Point x	Y1 The first point of the individual char. Point y.	....	X21 The last point of the individual char.

Math Fun Mathematical function operation on the measured value	EraseExt Erasing min. and max. values .	RstCount Reset counter value	Filtr.Lo Minimum low level impulse duration	Filtr.Hi Minimum high level impulse duration

Y21 The last point of the individual char.				
Math Fun Mathematical function operation on the measured value	EraseExt Erasing min. and max. values	RstCount Reset counter value	Filtr.Lo Minimum low level impulse duration	Filtr.Hi Minimum high level impulse duration

Y21 The last point of the individual char.

Settings Display Display parameters	DecimalP Minimum decimal point of the displayed value	Unit Displayed unit	Over Lo Lower display range threshold	Over Hi Upper display range threshold	Bcklight Display back-light time
Settings Alarm 1 Alarm 1 parameters	Param.A1 Input value type for alarm 1	Type A1 Alarm 1 type	OverLoA1 Alarm 1 lower thres-hold	OverHiA1 Alarm 1 up-per threshold	DlyOnA1 Alarm 1 acti-vation delay
Settings Alarm 2 Alarm 2 parameters	Param.A2 Input value type for alarm 2	Type A2 Alarm 2 type	OverLoA2 Alarm 2 lower thres-hold	OverHiA2 Alarm 2 up-per threshold	DlyOnA2 Alarm 2 acti-vation delay
Settings Output Analog output pa-rameters	Param.An Value which controls ana-log output	AnIn Lo Low level input signal	AnIn Hi High level input signal	AnOut Lo Low level output signal	AnOut Hi High level output signal
Settings Mbus 485 RS-485 interface parameters	Address Device address	ModeUnit Transmis-sion frame mode	BaudRate Transmission rate		
Settings Archive Archiving parameters	Arch.Val Archived va-lue selection	Param.Ar Value type triggering conditional archiving	Ar. Mode Archiving type	OverLoAr Archive lower threshold	OverHiAr Archive upper threshold

Bckl.Int LCD display backlight intensity	Disp.Reg Number of register displayed at the lower line of the display	Dec.P 2 Minimum decimal point of the second displayed value	Unit2 Unit of second displayed value	
DlyOffA1 Alarm 1 deactivation delay	OnLockA1 Alarm 1 reactivation delay	SgKeepA1 Alarm 1 indication mode		
DlyOffA2 Alarm 2 deactivation delay	OnLockA2 Alarm 2 reactivation delay	SgKeepA2 Alarm 2 indication mode		
OverServ Overflow management activation	OvrIn Lo Lower input overflow	OvrIn Hi Upper input overflow	OvrOutLo Value expected on output at input lower overflow	OvrOutHi Value expected on output at input upper overflow

Ar. Time Archiving period	Ar.Erase Erasing internal archive	Rec.ToSD Copy internal archive into SD/SDHC card	Param.SD Percent of internal archive use which triggers automatic copying to SD/SDHC card

Settings Ethernet Ethernet parameters	DHCP DHCP client on/off	addrIP32 B3,B2 byte of IP address (IPv4)	addrIP10 B1,B0 byte of IP address (IPv4)	mask 32 B3,B2 byte of subnet mask	mask 10 B1,B0 byte of subnet mask
		received from DHCP or entered manually when DHCP is off,			
	AddrmTCP Device address for TCP/IP Modbus service	PortMbus TCP/IP Modbus port	TimeMbu TCP/IP Modbus service close time when inactive	no.c.TCP Number of allowed simultaneous connections with TCP/IP Modbus service	Port FTP FTP server data port number
Settings Service Service parameters	Fabr.Par Write standard parameters	Security Enter password	Time Set current time	Date Set current date	AutoTime Auto change of summer/ winter time

gate 32 B3,B2 byte of default gateway address	gate 10 B1,B0 byte of default gateway address	MAC 54 B5,B4 byte of the transducer's MAC address	MAC 32 B3,B2 byte of the transducer's MAC address	MAC 10 B1,B0 byte of the transducer's MAC address
format: B3.B2.B1.B0		format : B5:B4:B3:B2:B1:B0		
p.comFTP FTP server command port number	portHTTP HTTP server port number	LnkSpeed Link speed	EthStdPa Set standard Ethernet interface parameters	ReInitEt Apply changes of Ethernet interface parameters
Disptest CD display and indicating diodes test	Language Menu language selection	SaveFile Force writing transducer configu-ration file into an SD/SDHC card		

Fig. 13. Programming matrix

5.4.1. Changing the value of the selected parameter

To increment the selected parameter, press [▲]. Press the key once to increase the value by 1. If value of 9 is increased, the digit will switch to 0. To change the digit, press [◄] . Press [◄] when editing the most significant digit to edit the digit sign character – press [▲] to edit the sign character.

To accept the set parameter, press [↵] . The parameter will be stored. Press [↩] to cancel change during edition.

5.4.2. Changing floating-point values

The change is carried out in two stages. (the transition to the next stage follows after pressing the [↵] key.

- setting the dot position (00000., 0000.0, 000.00, 00.000, 0.0000); The [◄] key moves the dot to the left, and [▲] key moves the dot to the right. Pressing [↩] key when changing the parameter value will cancel saving operation.
- Setting the value from the range -99999…99999 is similar to the integers;

5.4.3. Programmable transducer parameters

The table below shows programmable parameters and the possible ranges of values.

Table 2

Settings Main Inp			
Para-meter symbol	**Description**	**Range of changes**	
Input	Selection of the main input type – measured value type	**Displayed symbol**	**Description**
		Pulse Count.	Pulse counter (counter type input)
		Freq. f<10kHz	Frequency f<10 kHz
		Rotary speed	Rotational speed
		Period T<20s	Period T<20s
		Period T<1.5h	Period T < 1.5h
		Freq. f<1MHz	Frequency f < 1 MHz
		Running time	Running time counter (counter type input)
		Current time	Current time (Real Time Clock)
		Counter IN1-IN2	Difference of the main (WE1) and auxiliary (WE2) counter (counter type input)
		Encoder	Incremental encoder

AvgTime	Main input measurement time given in milliseconds. Result on the display represents the average value calculated in AvgTime Period.	10 ... 21000	
Scale	Selection of input value scaling on the main input. Measured value is multiplied or divided by the scale value (ScaleVal parameter).	Multiply	multiplication by constant
		Divide	division by constant
ScaleVal	Constant scaling input value on the main input – scale value. Entering negative value causes counting down (pulse counter and running time counter mode).	-99999 ... 99999	
Ext. Func	Permission for external functions for the main input: start/stop, reset (transducer keys and/or control inputs). Taken into account only in counter modes: pulse counter and running time counter.	Keyboard	External control input functions switched off, access to functions only with transducer keys.
		Exter.In	Control input functions switched on, key access switched off.
		Key+Ext	External functions of control inputs and key functions switched on.

Math Fun	Mathematical function operation on the value measured on the main input	Off	Mathematical functions switched off
		x2	Square of measured value
		√ x	Square root of measured value
		1 / x	Inverse of measured value
		1 / x2	Inverse square of measured value
		1 / √ x	Inverse square root of measured value
EraseExt	Clears minimum and maximum values with time and date of occurrence on the main input	No – without changes Min – erasing minimum value Max – erasing maximum value	
RstCount	Reset counter value on the main input	Yes - reset value No – without changes	
Filtr.Lo	Minimum low level impulse duration. The value is given in milliseconds	0 . . . 99999	
Filtr.Hi	Minimum high level impulse duration. The value is given in milliseconds	0 . . . 99999	

MaxTime	Maximum time of signal measurement on the main input, time with at least one complete periodic signal. The value is given in milliseconds.	0...5600	
AutoRst.	Limit value, the counter value on the main input will be reset if AutoRst. value will be overflowed, (when input is counter type)	-99999...99999	
Correlat	Dependence selection between the main (IN1) and auxiliary (IN2) input, the dependence value is available in register 7537	IN1/IN2	
		IN2/IN1	
		IN1*IN1	
		IN1-IN2	
		IN2-IN1	
		IN1+IN2	

Table 3

Settings Ind.Char		
Parameter symbol	**Description**	**Range of changes**
Point No	Number of individual characteristics points for the main input. Number of sections is the number of points minus 1	1...21
X1	Measured value on the main input, for which Yn (n – point number) is expected.	-99999...99999
Y1	Expected value for Xn.	-99999...99999

Table 4

Settings Aux Inp.			
Parameter symbol	**Description**	**Range of changes**	
Input	Selection of the auxiliary input type – measured value type	**Displayed symbol**	**Description**
		Pulse Count.	Pulse counter (counter type input)
		Freq. f<10kHz	Frequency f<10 kHz
		Rotary speed	Rotational speed
		Period T<20s	Period T<20s
		Period T<1,5h	Period T < 1,5h
		Freq. f<1MHz	Frequency f < 1 MHz
		Running time	Running time counter (counter type input)
		Current time	Current time (Real Time Clock)

		Setting Value	In setter mode the value measured on IN2 is the value entered manually using keys or value entered in a proper register (see section 5.5.1.2)
AvgTime	Auxiliary input measurement time given in milliseconds. Result on the display represents the average value calculated in AvgTime. Period.	10 ... 21000	
Scale	Selection of input value scaling on the auxiliary input. Measured value is multiplied or divided by the scale value (ScaleVal parameter).	Multiply	multiplication by constant
		Divide	division by constant
ScaleVal	Constant scaling input value on the auxiliary input – scale value. Entering negative value causes counting down (pulse counter and running time counter mode).	-99999 ... 99999	
Ext.Func	Permission for external functions for the auxiliary input: start/stop, reset (transducer keys and/or control inputs). Taken into account only in counter modes: pulse counter and running time counter.	No	functions of external control inputs switched off, key access switched off, counter inputs constantly switched on
		Yes	control input functions switched on, key access switched off

Math Fun	Mathematical function operation on the value measured on the auxiliary input	Off	Mathematical functions switched off
		x2	Square of measured value
		√ x	Square root of measured value
		1 / x	Inverse of measured value
		1 / x2	Inverse square of measured value
		1 / √ x	Inverse square root of measured value
EraseExt	Clears minimum and maximum values with time and date of occurrence on the auxiliary input	No – without changes Min – erasing minimum value Max – erasing maximum value	
RstCount	Reset counter value on the auxiliary input	Yes- reset value No – without changes	
Filtr.Lo	Minimum low level impulse duration. The value is given in milliseconds	0 . . . 99999	
Filtr.Hi	Minimum high level impulse duration. The value is given in milliseconds	0 . . . 99999	
MaxTime	Maximum time of signal measurement on the auxiliary input, time with at least one complete periodic signal. The value is given in milliseconds.	0 . . . 5600	

AutoRst.	Limit value, the counter value on the auxiliary input will be reset if AutoRst. value will be overflowed, (when input is counter type)	-99999...99999

Table 5

Settings IndChar2		
Parameter symbol	**Description**	**Range of changes**
Point No	Number of individual characteristics points for the auxiliary input. Number of sections is the number of points minus 1.	1...21
X1	Measured value on the auxiliary input, for which Yn (n – point number) is expected.	-99999...99999
Y1	Expected value for Xn.	-99999...99999

Table 6

Settings Display				
Parameter symbol	**Description**	**Range of changes**		
DecimalP	Minimum decimal point of the displayed value – display format.	0.0000 - 0 00.000 - 1 000.00 - 2 0000.0 - 3 00000 - 4		
Unit	Displayed unit		kVAh	szt
		V	MVAh	imp
		A	Hz	rps
		mV	kHz	m/s
		kV	Ω	l/s
		mA	kΩ	obr/mi
		kA	ºC	rpm
		W	ºF	mm/min
		kW	K	m/min
		MW	%	l/min
		var	%RH	m3/min
		kvar	pH	szt/h
		Mvar	kg	m/h
		VA	bar	km/h
		kVA	m	m^3/h
		MVA	l	kg/h
		kWh	s	l/h
		MWh	h	User's defined
		kVarh	m^3	
		MVarh	obr	

Over Lo	Lower display range threshold	-99999...99999
Over Hi	Upper display range threshold	-99999...99999
Bcklight	Display backlight time	On - always on Off - always off 1 - active for X seconds 2 ... 60
Bckl.Int	LCD display backlight intensity	10% - LCD display backlight 10% of maximum backlight 20% - LCD display backlight 20% of maximum backlight ... 100% - LCD display backlight 100% of maximum backlight
Disp.Reg	Number of register displayed at the lower line of the display	0...65535
Dec.P 2	Minimum decimal point of the second displayed value	0.0000 - 0 00.000 - 1 000.00 - 2 0000.0 - 3 00000 - 4
Unit 2	Unit of the second displayed value	Similar to parameter Unit

Table 7

Settings Alarm 1,Alarm 2			
Parameter symbol	**Description**	**Range of changes**	
Param.A1 Param.A2	Input value type for alarm 1	DisplVal	displayed value – value calculated from the main input
		2 inpVal	value calculated from the auxiliary input
		Time	time
		2DispVal	the second displayed value
Type A1 Type A2	Alarm type. Fig.21 shows graphical illustration of the alarm types.	n-on	normal (change from 0 to 1).
		n-off	normal (change from 1 to 0).
		on	switched on
		off	switched off
		h-on	manual, switched on; until the alarm type is changed, the alarm output remains permanently switched on
		h-off	manual, switched off; until the alarm type is changed, the alarm output remains permanently switched off
OverLoA1 OverLoA2	Lower alarm threshold	-99999...99999	
ProgGoA1 ProgGoA2	Upper alarm threshold	-99999...99999	
OpoZalA1 OpoZalA2	Alarm activation delay (s)	0...900	

DlyOffA1 DlyOffA2	Alarm deactivation delay (s)	0...900	
OnLockA1 OnLockA2	Alarm reactivation delay (s)	0...900	
SgKeepA1 SgKeepA2	Alarm indication mode	Off	alarm occurrence is indicated using LED A1/A2, alarm deactivation switches off LED A1/A2
		On	alarm occurrence is indicated using LED A1/A2, alarm deactivation causes blinking of A1/A2 LED's until the alarm is reconfigured or cleared with key ↵ ↩ combination.

Table 8

Settings Output			
Parameter symbol	**Description**	**Range of changes**	
Param.An	Value which controls analog output	DisplVal	displayed value – value calculated from the main input
		2 inpVal	value calculated from the auxiliary input
		Time	time
		2DispVal	the second displayed value

AnIn Lo	Analog output individual characteristic – lower input threshold	-99999...99999	
AnIn Hi	Analog output individual characteristic – upper input threshold	-99999...99999	
AnOut Lo	Analog output individual characteristic – lower output threshold	-24...24	
AnOut Hi	Analog output individual characteristic – upper output threshold	-24...24	
OverServ	Switching on analog output overflow management	Off	Overflow management switched off
		On	Overflow management switched on
OvrIn Lo	Lower input overflow for output overflows	-99999...99999	
OvrIn Hi	Upper input overflow for output overflows	-99999...99999	
OvrOutLo	Value expected on output on lower overflow	-24...24	
OvrOutHi	Value expected on output on upper overflow	-24...24	

Table 9

Settings Mbus 485			
Parameter symbol	**Description**	**Range of changes**	
Address	RS-485 MODBUS network address. Enter 0 to switch off the interface.	0 . . . 247	
ModeUnit	RS-485 interface transmission mode	r8n2 r8e1 r8o1 r8n1	
BaudRate	RS-485 interface transmission baudrate	4800	4800 bit/s
		9600	9600 bit/s
		19200	19200 bit/s
		38400	38400 bit/s
		57600	57600 bit/s
		115200	115200 bit/s
		230400	230400 bit/s
		256000	256000 bit/s

Table 10

Settings Archive			
Parameter symbol	**Description**	**Range of changes**	
Arch.Val	Selection of archived values **Note:** *changing the register value clears the archive in the internal memory!!!*	DisplVal	displayed value only – value calculated from the main input
		Both Val	Displayed value and value calculated from the auxiliary input

		+2nd Val	Displayed value, value calculated from the auxiliary input and the second displayed value
Param.Ar	Type of input value which controls conditional archiving	DisplVal	displayed value – value calculated from the main input
		2 inpVal	value calculated from the auxiliary input
		Time	time
		2DispVal	the second displayed value – value from register set as Disp.Reg
Ar. Mode	Archiving triggering condition. Fig. 28 shows a visualization of condition types triggering archiving (similarly to alarm types).	n-on	normal (change from 0 to 1).
		n-off	normal (change from 1 to 0).
		on	switched on
		off	switched off
		h-on	manual, switched on; until the archiving type is changed, the archiving remains permanently switched on.
		h-off	manual, switched off; until the archiving type is changed, the archiving remains permanently switched off.
OverLoAr	Archive lower threshold	-99999...99999	
ProgGoAr	Archive upper threshold	-99999...99999	
Ar. Time	Archiving period (s)	1...3600	
Ar.Erase	Erasing internal archive	Yes	Start erasing internal archive
		No	Without changes

Rec.ToSD	Copy internal archive into SD/SDHC card (variant P30o-X1XXXXXX) or into internal file system memory (variant P30o-X2XXXXXX)	Yes	Start copying the archive
		No	Without changes
Param.SD	Percent of internal archive use which triggers automatic copying to SD/SDHC card	5 ... 100	

Table 11

Settings Ethernet (option, only version P30O-X2XXXXXX)			
Parameter symbol	**Description**	**Range of changes**	
DHCP	Switching DHCP client on/off (enables automatic transducer configuration which is connected to a network so it can communicate on that network using the Internet Protocol **IP**)	Off	DHCP switched off – manually configure transducer's IP address and subnet mask;
		On	DHCP switched on, after powering on or selecting from menu option ReInitEt the transducer will receive IP address, subnet mask and gateway address from the DHCP server, the gateway address will be the address of the server that assigned parameters to the transducer;

addrIP32	Third and second byte (B3.B2) of transducer's IP address, value displayed in a decimal format, IPv4 address format: B3.B2.B1.B0	000.000 ... 255.255
addrIP10	First and zero byte (B1.B0) of transducer's IP address, value displayed in a decimal format, IPv4 address format: B3.B2. B1.B0	000.000 ... 255.255
mask 32	Third and second byte (B3.B2) of transducer's subnet mask, value displayed in decimal format, mask format: B3.B2. B1.B0	000.000 ... 255.255
mask 10	First and zero byte (B1.B0) of transducer's subnet mask, value displayed in a decimal format, mask format: B3.B2.B1.B0	000.000 ... 255.255
gate 32	Third and second byte (B3.B2) of transducer's default gateway, value displayed in a decimal format, gateway address format: B3.B2.B1.B0	000.000 ... 255.255
gate 10	First and zero byte (B1.B0) of transducer's default gateway, value displayed in a decimal format, gateway address format: B3.B2.B1.B0	000.000 ... 255.255
MAC 54	Fifth and fourth byte (B5. B4) of transducer's MAC address, value displayed in a decimal format; format B5:B4:B3:B2:B1:B0	000.000 ... 255.255

MAC 32	Third and second byte (B3.B2) of transducer's MAC address, value displayed in a decimal format; format B5:B4:B3:B2:B1:B0	000.000 ... 255.255	
MAC 10	First and zero byte (B1.B0) of transducer's MAC address, value displayed in a decimal format; format B5:B4:B3:B2:B1:B0	000.000 ... 255.255	
AddrmTCP	Device address for Modbus TCP/IP protocol	0 ... 255	
PortMbus	Modbus TCP/IP port number	0 ... 65535	
TimeMbus	Modbus TCP/IP service port closing time, the value is given in seconds	10 ... 600	
no.c.TCP	Maximum number of simultaneous connections with Modbus TCP/IP service	1 ... 4	
p.comFTP	FTP server command port number	20...65535	
Port FTP	FTP server data port number	20...65535	
Port HTTP	HTTP server port number	80...65535	
LnkSpeed	Transmission rate	Auto	automatic
		10 Mb/s	10 Mbit/s
		100 Mb/s	100 Mbit/s
EthStdPa	Set default Ethernet interface parameters	Yes	restore default Ethernet interface parameters
		No	without changes
ReInitEt	Apply a new Ethernet interface parameters	Yes	save a new Ethernet interface parameters and reinitiate the Ethernet interface
		No	without changes

Table 12

Settings Service			
Parameter symbol	**Description**	**Range of changes**	
Fabr.Par	Restore factory parameters. Choose Yes to write standard parameters to the transducer. Factory parameters are shown in table 22.	No	without changes
		Yes	restores factory parameters.
Security	Enter new password. Enter “0” to deactivate password.	-99999...99999	
Time	Set current time. Setting incorrect time cancels time setting - the entered value will not be taken.	00:00...23:59	
Date	Set current date: month + day. Setting incorrect date cancels data setting - the entered value will not be taken.	01-01-10...31-12-99	
AutoTime	Auto change of summer/winter time and vice versa	No	without auto time change
		Yes	with auto time change
DispTest	LCD display and indicating LED’s test	No	do nothing
		Yes	starts the test
Language	Select current menu language	Polski	select Polish language
		English	select English language
		Deutsch	select German language
		Francais	Select French language

SaveFile		No	do nothing
		Yes	Force writing transducer configuration file into an external SD/SDHC card or internal file system memory

5.5. Transducer functions

This transducer can be used for measuring and processing periodic values such as: frequency, period, rotational speed, number of impulses, position of the incremental encoder, as well as running time and current time (see Table 2,4). Moreover, the signal setter function has been implemented in the auxiliary input (see section 5.5.1.2).

5.5.1. Measurement inputs

Standard and special measurement input types have been implemented in the transducer. Standard and special input types are supported by both the main input and the auxiliary input.

Selection of appropriate measured value type on the main and the auxiliary input is possible using the keypad in menu Main Inp and Aux Inp. The configuration of all measurement input parameters can also be stored via RS-485 and Ethernet interface(TCP/IP Modbus, WWW server). List of possible input types to chose was shown in table 2, 4.

5.5.1.1. Standard measurement input types

List of standard measurement input types selectable on the main and the auxiliary input:

- Pulse Count.
- Freq. f < 10 kHz
- Rotary speed
- Period t < 20s
- Period t < 1.5h
- Freq. f < 1 MHz
- Running time
- Current time

For Running time, Current time input types the measurement result is provided in the following format: HH,MMSS (e.g. “9.5405” means 09:54:05 o’clock in Current time mode or 9 hours 54 minutes and 5 seconds of running time in Running time mode. Values of running time counters are additionally provided in the form of an absolute number of seconds of running time in register 7530 – main input, 7531 – auxiliary input (table 47).
Counter inputs on the auxiliary input (Pulse Count., Running time) can be controlled by control inputs described as START/STOP, RESET when parameter Aux Inp. → Ext.Func → Yes is set (Register 4013 → “1”). If parameter Aux Inp. → Ext.Func → No is set (Register 4013 → “0”), the counter is always on and the state change on the control input doesn’t influence on counting value.

Counter inputs on the main input (Pulse Count., Running time, Counter IN1-IN2) can be controlled by: control inputs described as START/STOP, RESET, key combination (see section. 5.3.2) or via RS-485 interface depending on parameter Main Inp → Ext.Func (register 4004).

Enabling counting on main input requires switching on counting permission. Counting permission can be switched on using: high state on control input START/STOP, holding for about 1 second [↵] [◄] keys or writing value “2” to register 4007 depending on parameter Main Inp → Ext.Func (Register 4004) see table 12A. Setting low state on control input, holding for about 1 second

[↵] [◄] keys or writing value “4” to register 4007 switches off counting permission. If counting permission is off counter will not count pulses on main input. The actual state of counting permission can be read from register 4303 on bit no 12:
→ „1” - counting permission is switched on, counting pulses on main input is enabled
→ „0” - counting permission is switched off, counting pulses on main input is disabled

Note: If input counter type is chosen on main input and pulses are not counted one must check if counting permission is switched on (register 4302 bit no 12). If counting permission is switched off one must switched it on depending on setting parameter Main Inp → Ext.Func (Register 4004).

Table 12A

Main Inp Ext.Func	Register 4004 value	Switching on counting permission	Switching off counting permission
Keyboard	0	key combination [↵] [◄] (1 sec.) or writing value „2” to 4007 register	key combination [↵] [◄] (1 sec.) or writing value „4” to 4007 register
Exter. In	1	high state „1” on the START/STOP control input	low state „0” on the START/STOP control input
Key+Ext	2	changing state from low to high on control input START/STOP or key combination [↵] [◄] (1 sec.) or writing value „2” to 4007 register	changing state from high to low on control input START/STOP or key combination [↵] [◄] (1 sec.) or writing value „4” to 4007 register

Note: After default settings are restored counting permission is always switched on

5.5.1.2. Special measurement input types

List of special measurement input types defined independently for the main and the auxiliary input:

⇨ main input:

* Counter IN1– IN2,
* Encoder,

⇨auxiliary input:

* Setting Value.

Two special input types for the main input: Counter IN1 - IN2 and Encoder require connection of measurement signals to the main input and the auxiliary input terminals (IN1 + IN2), because for proper operation they physically use two input signals. After selecting one of these types, the transducer will automatically switch the auxiliary input type to Current time if the auxiliary input has been set to standard type before. During the operation of the main input in Counter IN1 - IN2 and Encoder mode, the auxiliary input can operate in one of two modes: Current time and Setting Value, other input types will be disabled then, and any attempt to set a different mode will cause setting Current time mode.

A special input type Setting Value has been selected for the auxiliary input. The setter mode enables controlling the value measured on the auxiliary input manually by using the transducer keypad and by entering the value via Modbus protocol (RS-485, TCP/IP), WWW server.

In the setting mode, the Aux Inp.- auxiliary input parameter functions – are changed:

- ScaleVal → Register 7670 → value of the absolute setter step;
- Filtr.Lo → Register 7671 → current setter value equal to the value measured on the auxiliary input
- AutoRst. → Register 7673 → default value of the setter set after force clearing the auxiliary input counter (IN2)

Use the following keys to manually change the setter value: ▲ - increase the value by an absolute setter step, ◄ - decrease the value by an absolute setter step. If one of these keys is pressed after more than 6 seconds of inactivity, keys become active and the parameter can be changed, and the bottom row of the LCD display is forced to display the setter value even if a different value has been set as the second displayed value. If these keys are pressed once more, the setter value will be changed. There is also possibility to change the setter value remotely by writing the correct value to register 7671. Mathematical functions and individual characteristic of the auxiliary input (IN2) influence the setter value. The setter value is treated as a value measured on the auxiliary input, therefore this value can be used for driving the analog output, alarm outputs and conditional archiving.

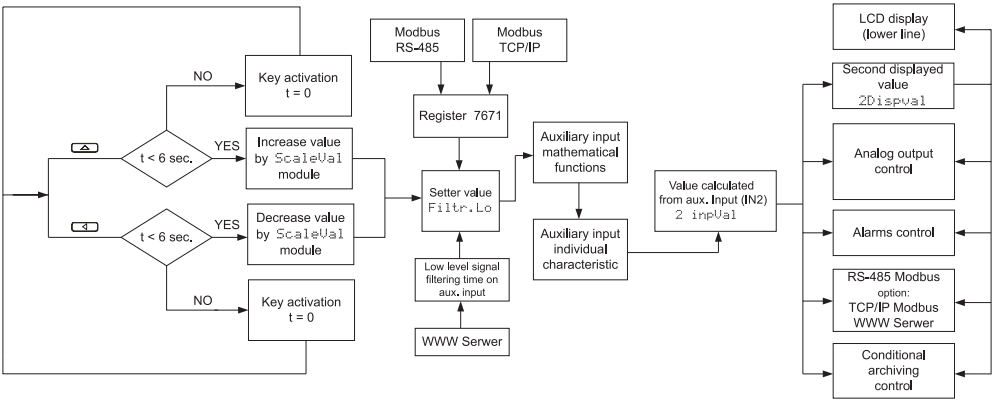

Fig. 14. Diagram of operation of the auxiliary input in "Setting Value" mode

Example 1. **Using the transducer as an analog setter in 0...10 V range and 50 mV step for changes made using the keypad**

For effectuating the application according to example 1, transducer with analog voltage output 0...10 V manufacturing variant (P30o-2XXXXXXX) is required.

Transducer configuration: Table 13

Keypad			Modbus Register		Meaning
Menu	**Submenu**	**Value**	**Number**	**Value**	
Aux Inp.	Input	Setting Value	4009	8	Input type
	ScaleVal	0,0500	7670	0.0500	Setter step value
	Filtr.Lo	0,0000	7671	0.0000	Setter value
	Filtr.Hi	0,0500	7672	0.0000	Number of transducer register which is controlled by Setting value function (only registers from range 4000 or 7600; if value is set to 0,0500 setter not controls any of transducer register)
	Math Fun	Off	4014	0	Mathematical functions
	AutoRst.	0,0000	7673	0.0000	Setter value after triggering the auxiliary counter

Output	Param.An	2 inpVal	4040	1	Value which drives the analog output
	AnIn Lo	0,0000	7610	0.0000	Analog output individual characteristic – lower threshold of the input value
	AnIn Hi	10,000	7611	10.000	Analog output individual characteristic – upper threshold of the input value
	AnOut Lo	0,0000	7612	0.0000	Analog output individual characteristic – lower threshold of the output value
	AnOut Hi	10,000	7613	10.000	Analog output individual characteristic – upper threshold of the output value
	OverServ	Off	4041	0	Switching off analog output overflow management

The transducer configured using parameters provided in table 13 will provide the setter value on the analog output changing by 0.05 V after pressing ▲ or ◄ key.

Rapid value change of the selected transducer parameter

If transducer operates in Setting Value mode, one can rapidly controls selected transducer register from range 4000 and 7600. To select register which should be controlled the number of that register must be written to register 7672.

Example 1A: **Using** Setting Value **input type to rapidly change the reset threshold value of main input pulse counter**

Transducer is set to count pulses on the main input from range 0...100, decreasing value from “100” to “0”; Setting Value input on auxiliary input is used to rapidly change the reset threshold value of pulse counter, step change value “2”

Transducer parameters:

Table 13A

Key’s			Modbus register		Description
Menu	Submenu	Value	Number	Value	
Main Inp	Input	Pulse Count.	4000	0	Main input type - Pulse Count.
	Scale	Multiply	4003	0	Multiply/divide by constant value
	ScaleVal	-1,0000	7615	-1,0	Constant value which scales measured value (sign “-” force counter to decrease its value from AutoRst. value to “0”)
	AutoRst.	100,00	7618	100,0	Limit value, the counter value on the main input will be reset to “100,0” if “0” value will be overflowed, (the counter will count: 100 → 99...1 → 0 →99→98…1→ ….)

Aux Inp.	Input	Setting Value	4009	8	Auxiliary input type - Setting Value
	ScaleVal	0,0500	7670	2	Step change value
	Filtr.Lo	100,00	7671	100,0	Setting value
	Filtr.Hi	7618,0	7672	7618	Transducer register number which is controlled by setting value mode
	Math Fun	Off	4014	0	Mathematical functions
	AutoRst.	100,00	7673	100,0	Setting value after reseting auxiliary input counter

If transducer is configured according to table. 13A user would be able to rapidly change (using key's) threshold of automatic reset counter value on main input. When key ▲ is pressed the value of register 7618 will be increased by step change value "2".

100,00 → ▲ → 102,00 → ▲ → 104,00 ...

When key ◄ is pressed the value of register 7618 will be decreased by step change value "2":

100,00 → ◄ → 98,000 → ◄ → 96,000 ...

5.5.1.3. Averaging time of measured values

Independent averaging times of the measured value can be defined for the main input and the auxiliary input. Averaging times of measured values can be set within 0.01...20 s range – the moving window averaging function has been used. Input signals with periods shorter than the minimum averaging time (<10ms) are averaged using the arithmetic mean in 10 ms time.

5.5.1.4. Filtering input signals

Input signal filtering has been implemented in the P30o transducer. This functionality enables correct measurement of signals from mechanical setters (switches, relays) that once the state is switched on usually generate an impulse packet resulting from contact vibrations which causes the corruption of the measurement result. The most typical example of such a setter is an electromagnetic relay that after being powered on switches contact and thereby generates contact vibrations usually lasting 3…5 ms. The input signal filtering must be activated in the transducer to correctly measure such a signal. To do this, set input (e.g. main) parameters: Main Inp → Filtr.Lo (Register 7616) and Main Inp → Filtr.Hi (Register 7617) to value exceeding the time of occurrence of contact vibrations – in the case of electromagnetic relays "10.0" (ms) is the recommended value. Please remember that setting filtering decreases the range of frequency (period) measurement, for 10 ms filtering time setting, the maximum measurement frequency will be just 50 Hz (20 ms) which can be calculated using the following formula:

$$f = 1/(Filtr.Lo + Filtr.Hi)$$

Input signal filtering is important for inputs type: Pulse Count., Freq. f < 10 kHz, Rotary speed, Period < 20s, Period t <1.5h, Counter IN1 - IN2. Enter "0" as the filtering value to switch off input signal filtering.

5.5.1.5. Maximum measurement time

The maximum time of measurement is very important parameter influencing the measurement of periodic signals. This parameter specifies how long the transducer will wait for one complete cycle of the signal level change before it generates information about the lack of input signal - **the reaction time of the analog output and alarm outputs for the loss of input signal equals the maximum time of measurement!!** The maximum time of measurement is important for inputs type: Pulse Count., Freq. f<10kHz, Rotary Speed, Period < 20s, Period t < 1.5h, Counter IN1 - IN2. The range of possible settings for maximum times of measurement is shown in tables 14,15.

Table 14

Main input											
Input type Main Inp	Functionality	Filtering input signals	Auto reseting	External functions	Reseting from keypad	Individual characteristic	Mathematical functions	Measurement averaging	Multiplication/ division by constant	Maximal measure-ment time (range) [s]	Value measured at loss of signal
Pulse Count.	Counting pulses up when ScaleVal > 0 or counting impulses down when ScaleVal < 0.	+	+	+	+	+	+	-	+	-	Co-unter value
Freq. f<10kHz	f < 10kHz frequency measurement	+	-	-	-	+	+	+	+	0.5...21	-1E20
Rotary speed	Rotational speed measurement	+	-	-	-	+	+	+	+		0
Period T<20s	T < 20s period measurement	+	-	-	-	+	+	+	+		-1E20
Period T<1,5h	T < 1.5 h period measurement	+	-	-	-	+	+	+	+	0.5 ..11000	-1E20
Freq. f<1MHz	f < 1MHz frequency measurement	-	-	-	-	+	+	+	+	-	-1E20
Running time	Running time counter (resolution 1 ms, format HH.MMSS , e.g. “9.5405” means 9 hours, 54 minutes and 5 seconds)	-	+	+	+	-	-	-	-	-	Co-unter value
Current time	Current time (format HH.MMSS, e.g. “9.5405” means 09: 54:05 o’clock)	-	-	-	-	-	-	-	-	-	-
Counter IN1-IN2	Pulse difference counter on IN1 and IN2 (the main input filtering time is accounted for both IN1 and IN2 inputs)	+	+	+	+	+	+	-	+	0.5...21	Co-unter value
Encoder	Measurement of the incremental encoder position	+	+	-	-	+	+	-	-	-	-

Table 15

	Input type Aux Inp.	Functionality	Filtering input signals	Auto reseting	External functions	Reseting from keypad	Individual characteristic	Mathematical functions	Measurement averaging	Multiplication/ division by constant	Maximal measurement time (range) [s]	Value measured at loss of signal
Auxiliary input	Pulse Count.	Counting pulses up when ScaleVal > 0 or counting impulses down when ScaleVal < 0.	+	+	+	+	+	+	-	+	-	Counter value
	Freq. f<10kHz	f < 10kHz frequency measurement	+	-	-	-	+	+	+	+	0.5...21	-1E20
	Rotary speed	Rotational speed measurement	+	-	-	-	+	+	+	+		0
	Period T<20s	T < 20s period measurement	+	-	-	-	+	+	+	+		-1E20
	Period T<1,5h	T < 1.5 h period measurement	+	-	-	-	+	+	+	+	0.5 ..11000	-1E20
	Freq. f<1MHz	f < 1MHz frequency measurement	-	-	-	-	+	+	+	+	-	-1E20
	Running time	Running time counter (resolution 1 ms, format HH.MMSS , e.g. "9.5405" means 9 hours, 54 minutes and 5 seconds)	-	+	+	-	-	-	-	-	-	Counter value
	Current time	Current time (format HH.MMSS, e.g. "9.5405" means 09: 54:05 o'clock)	-	-	-	-	-	-	-	-	-	-
	Setting Value	Value setter	-	+	+	+	+	+	-	+	0.5...21	Counter value

5.5.1.6. Automatic reset of counter values

If transducer works in counter mode it will count measured value till counter reset value specified in menu: Main Inp → AutoRst., or Aux Inp. → AutoRst is achieved. Parameter AutoRst. specifies the threshold overflowing which will cause counter reset. After reset counter condition occurs the counter value will be set to “0” or AutoRst. value depending on the value of ScaleVal or AutoRst. parameters according to table 16.

Table 16

Counter input parameters (main input and auxiliary input)		Counter value after reset
ScaleVal	AutoRst.	
ScaleVal > 0	AutoRst. ≥ 0	0
ScaleVal > 0	AutoRst. < 0	AutoRst.
ScaleVal < 0	AutoRst. > 0	AutoRst.
ScaleVal < 0	AutoRst. ≤ 0	0

5.5.1.7. Maximum and minimum values of measured signals

The P30o transducer has been fitted with the function of storing minimum and maximum values with the time and date of occurrence for both the main and the auxiliary inputs. Minimum and maximum values are stored after a power supply loss, they can be read and reset using transducer registers via Modbus protocol (RS-485, TCP/IP – see table 42), WWW server, they can also be displayed on the display (only for min. and max. values from the main input) using the following keys:

▲ - the maximum value of the main input,

◄ - the minimum value of the main input. Displaying minimum and maximum values after pressing these keys does not work if the auxiliary input operates in Setting Value mode. Erasing the minimum and maximum value of main input is possible via key-

pad after pressing the combination of [▲] and [◄]. There is possibility to clear minimum and maximum values for both the main and the auxiliary input using menu function: Main Inp → EraseExt →Min / Max or Aux Inp. →EraseExt →Min / Max.

5.5.1.8. Mathematical operations on measured values

PThe transducer enables the performance of additional mathematical operations on the measured values for both the main input and the auxiliary input. Mathematical functions for the main input and the auxiliary input are independent, i.e. various operations can be used for each input. The following mathematical operations have been implemented in the transducer:

- scaling with a constant value,
- mathematical functions,
- 21-point individual characteristic,
- display range limit (main input only).

The way in which the mathematical operation influences the measured value is shown at fig. 15,16. Switching on and selection of the mathematical operation is possible via the keypad, Modbus protocol (RS-485, TCP/IP) and WWW server.

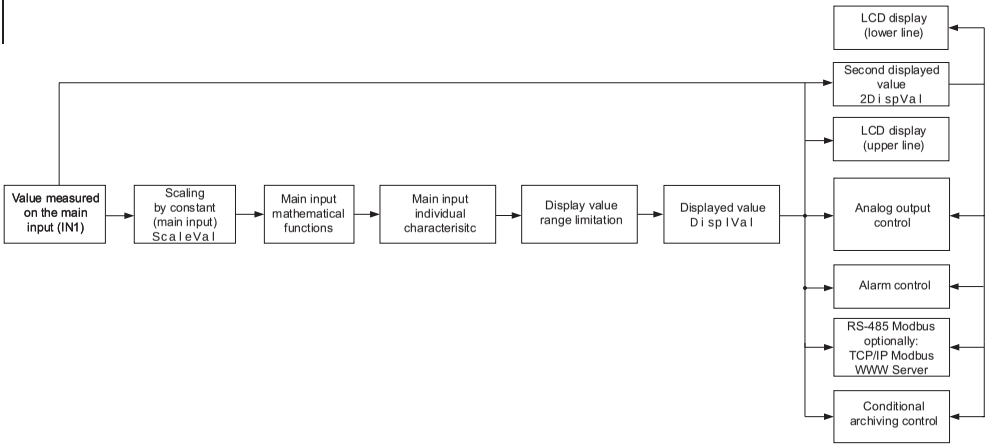

Fig. 15. The way in which the mathematical operations influence the measured value on the main input

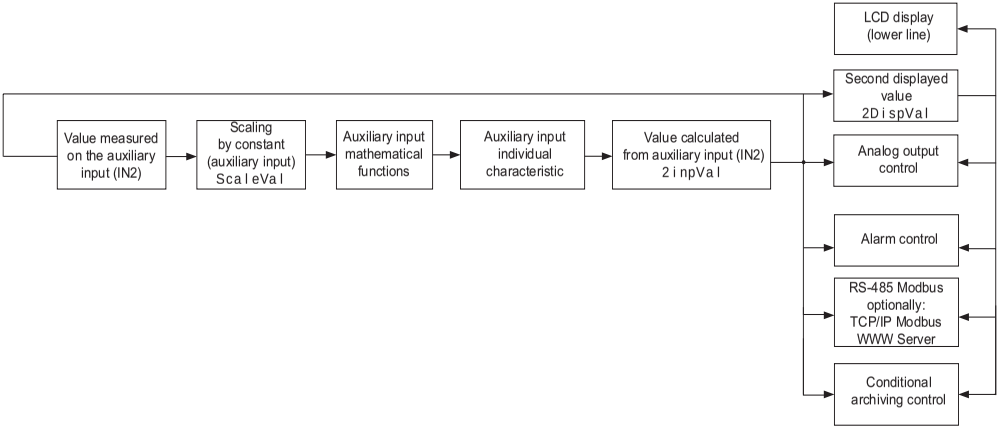

Fig. 16. The way in which the mathematical operations influence the measured value on the auxiliary input

5.5.1.9. Scaling with a constant value

The P30o transducer can multiply (Multiply) or divide (Divide) measured values by a constant (ScaleVal). If the scale value is negative, counter will count pulses “down” – the auto counter reset threshold should be set to a negative value. The default scaling value is multiplication by “1” which does not affect the measured value.

5.5.1.10. Mathematical functions

The P30o transducer can calculate the measured values using one of 5 implemented mathematical functions:

- square of measured value,
- root of measured value,
- inverse of measured value,
- inverse square of measured value,
- inverse root of measured value.

The operation of mathematical functions is switched off by default.

5.5.1.11. Input correlation

The transducer enables the performance of correlation operation (mutual dependency) between the values measured on the main input and the auxiliary input, and teating the result of this dependency as the second displayed value (controls alarms, analog output and archiving). The following dependencies are possible:

- division of the value on the main input by the value on the auxiliary input IN1 / IN2,
- division of the value on the auxiliary input by the value on the main input IN2 / IN1,
- multiplication of the value on the main input and the auxiliary input IN1 * IN2,
- difference of values on the main input and the auxiliary input IN1 - IN2,
- difference of values on the auxiliary input and the main input IN2 - IN1,
- sum of values on the main input and the auxiliary input IN1 + IN2.

The correlation parameters can be set in the menu via the keypad: Main Inp → Correlat, or via Modbus protocol → register 4008, or via the WWW server. The result of input correlation is available in register 7528. In order to display the result of correlation at the lower line of the LCD display, set register number “7528” as the second displayed value: Display → Disp.Reg → 7528 or enter “7528” to register 4024. This will enable to control alarms and analog output using the result of the input correlation, as well as archiving the correlation value as the second displayed value.

5.5.1.12. Input individual characteristic

P30o transducers perform the function of conversion of the measured value to any value due to implemented function of individual characteristics of the input. Independent individual characteristics have been implemented for the main input and the auxiliary input. The individual characteristics rescales the input signal being measured according to the characteristics set. The user can enter a maximum of twenty functions each by specifying points determining the ranges and expected values for subsequent points.

Programming individual characteristic consists in the definition of the number of points which the input function will be linearized by. Note that the number of linearized functions is the number of points minus one. Next, one must program subsequent points by providing the measured value Xn and the expected value corresponding to it – the value to be displayed (Yn). The visual interpretation of the individual characteristic is shown on fig. 17.

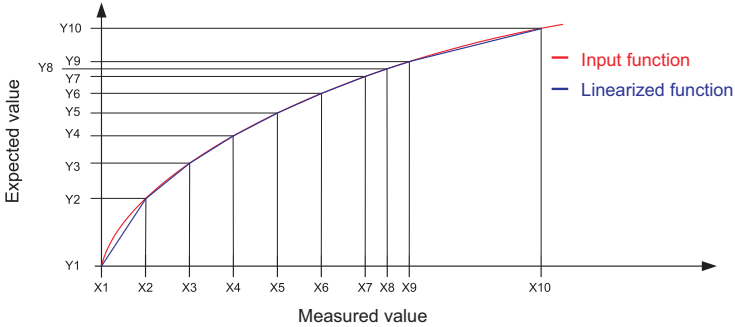

Fig. 17. Input individual characteristic

During function approximation, one must remember that in the case of approximating curves that significantly deviate from linear characteristics, the higher number of linearising sections, the lower the linearisation error.

If the measured values are lower than X1, then the calculations will be made based on the first straight line calculated based on points (X1,Y1) and (X2,Y2). However, for values higher than Xn (where n – the last declared measured value), the displayed value will be calculated based on the linear function determined last.

Note: All the entered points of the measured value (Yn) must be arranged in ascending order, so that the following dependence is true:

X1<X2<X3…<Xn

If the dependence specified above is not true, the individual characteristic functions will be automatically switched off (will not

be performed) and a diagnostic flag will be set in the status register. Individual characteristics are switched off by default. Parameters of individual characteristics can be configured via keyboard as separate groups of sub-menu: Ind.Char for the main input Char.In2 for the auxiliary input.

5.5.1.13. Displayed value range limitation

The value range limitation applies only to the main input, so that it influence only the displayed value DisplVal. The value range limitation parameters are located in the menu in the group of Display parameters: Over Lo – lower display value threshold and Over Hi – upper display value threshold. The default value of upper overflow is 99999 , and for lower overflow -99999. If the lower display overflow occurs the vvvvvv symbol is displayed on the display and the number value of the displayed value is set to -1e20. If the upper display overflow occurs the ^^^^^^ , symbol is displayed on the display and the number value of the displayed value is set to +1e20.

5.5.1.14. Example of transducer configuration

Example 2. **Transducer configuration for measuring instantaneous flow and liquid volume using a flowmeter with a contactron output.**

Liquid meter parameters:

- maximum flow Q_{MAX} = 400 m^3/h = 400/3600 = 1/9 m^3/s
- minimum flow Q_{MIN} = 6 m^3/h = 6/3600 = 1/600 m^3/s
- pulsing constant a = 10 imp/m^3
- pulse weight b = 1/a = 0,1 m^3/imp

Sensor connected according to fig. 5. Transducer P30o-XX2XXXXX manufacturing variant (power output 24 V d.c.). Alarm 2 parameters must be set:

Alarm 2 → Type A2 → h-on - 24V DC power output constantly switched on

Setting flow measurement on the main input of the transducer using IN1 terminals

First, one must select an appropriate type of the main input that will enable the best use of the signal from the sensor – flowmeter. To do this, specify the range of frequency (period) in which the sensor will operate. Calculate extreme values using minimum and maximum flows for the flowmeter and its pulsing constant with the following formulas:

$$f_{MIN} = a \cdot Q_{MIN} = 10\frac{pulse}{m^3} \cdot \frac{1m^3}{600s} = \frac{10}{600s} = \frac{1}{60} Hz = 0{,}0166 Hz$$

$$T_{MAX} = \frac{1}{f_{MIN}} = 60s$$

$$f_{MAX} = a \cdot Q_{MAX} = 10\frac{pulse}{m^3} \cdot \frac{1m^3}{9s} = \frac{10}{9s} = \frac{10}{9} Hz = 1{,}11111 Hz$$

$$T_{MIN} = \frac{1}{f_{MAX}} = 0{,}9s$$

The range of measured frequencies is 0,0166 … 1,11111 Hz (period 0,9 … 60 s) therefore the main input type must enable measuring periods up to 60 seconds. Therefore, select the main input type: Period T<1,5h. Next, set the maximum time of measurement after which the transducer will report lack of flow, i.e. the maximum possible time interval between impulses for the minimum possible flow – T_{MAX} = 60 s.

Main input parameters:

- Main Inp → MaxTime → 60 , 5 [s] (Register 7600 → „ 60,5 ”) - allow extra 0.5 s to correctly measure the minimum course (period 60 s)
- Main Inp → Input → Period T<1 , 5h (Register 4000 → „ 4 ”)
- Main Inp → Scale → Multiply (Register 4003 → „ 0 ”)
- Main Inp → ScaleVal → 1 , 0 (Register 7615 → „ 1,0 ”) ;
- Main Inp → Ext . Func → Key+Ext (Register 4004 → „ 0 ”) - allowing START/STOP and RESET functions from the keypad and control inputs;
- Main Inp → Filtr . Lo → 10 [ms](Register 7616 → „ 10,0 ”) - elimination of contact vibrations;
- Main Inp → Filtr . His → 10 [ms](Register 7617 → „ 10,0 ”) - elimination of contact vibrations ;
- Main Inp → AvgTime → 1000 (Register 4001 → „ 1000 ”) - averaging time 1 s.

Option A

- Main Inp → Math Fun → 1 / x (Register 4005 → „ 3 ”) - change value to frequency;

Main input individual characteristic settings:

- Ind . Char → Point No → 3 (Register 4002 → „ 3 ”)
- Ind . Char → X1 → 0 , 0000 (Register 7622 → „ 0,0 ”)
- Ind . Char → Y1 → 0 , 0000 (Register 7623 → „ 0,0 ”)
- Ind . Char → X2 → 0 , 0166 (Register 7624 → „ 0,0166 ”) - minimum frequency F_{MIN} = 0,0016 Hz
- Ind . Char → Y2 → 6 , 0000 (Register 7625 → „ 6,0000 ”) - minimum flow Q_{MIN}= 6 m^3/h
- Ind . Char → X3 → 1 , 1111 (Register 7626 → „ 1,1111 ”) - maximum frequency F_{MAX} = 1,1111, Hz
- Ind . Char → Y3 → 400 (Register 7627 → „ 400,00 ”) - maximum flow Q_{MAX}= 400 m^3/h

Option B

Main Inp → Math Fun → Off

Setting individual characteristic for period value taking into account that the lowest flow rate Q_{MIN} corresponds to the highest period T_{MAX} and that the subsequent individual characteristic points must be placed in the following sequence $X_N > X_{N-1} > \ldots > X_2 > X_1$.

- Ind.Char → Point No → 3 (Register 4002 → „ 2 ”)
- Ind.Char → X1 → 0,0000 (Register 7622 → „ 0,0 ”)
- Ind.Char → Y1 → 0,0000 (Register 7623 → „ 0,0 ”)
- Ind.Char → X2 → 0,9000 (Register 7624 → „ 0.9000 ”) - minimum period (maximum frequency) T_{MIN}=0.9 s
- Ind.Char → Y2 → 400,00 (Register 7625 → „ 400.00 ”) - maximum flow Q_{MAX}= 400 m^3/h
- Ind.Char → X3 → 60,000 (Register 7626 → „ 60.000 ”) - maximum period (minimum frequency) T_{MAX}=60,0 s
- Ind.Char → Y3 → 6,00 (Register 7627 → „ 6,0000”) - minimum flow Q_{MIN}= 6 m^3/h

In option B, the error resulting from value calculations is lower because the mathematical operation 1 / x is not performed.

Setting volume measurement on the auxiliary input of the transducer using IN2 terminals

For measuring liquid volume on the auxiliary input, one must use Pulse Count. input type and set proper impulse weight b = 0,1 m^3/imp .

Auxiliary input parameters:
- Aux Inp. → MaxTime→ 60,5 [s] (Register 7601 → „ 60.5 ”)
- Aux Inp. → Input → Pulse Count. (Register 4009 → „ 0 ”)
- Aux Inp. → Scale → Mulitply (Register 4012 → „ 0 ”)
- Aux Inp. → ScaleVal → 1,0 (Register 7670 → „ 0.1 ”) - pulse weight;
- Aux Inp. → Ext.Func → No (Register 4013 → „ 0 ”) - prohibiting START/STOP and RESET functions for control inputs;
- Aux Inp. → Math Fun → Off (Register 4014 → „ 0 ”) ;

- Aux Inp. → Filtr.Lo → 10 [ms](Register 7671 → „ 10.0 ”)
  - elimination of contact vibrations;
- Aux Inp. → Filtr.Hi → 10 [ms](Register 7672 → „ 10.0 ”)
  - elimination of contact vibrations;
- Aux Inp. → AvgTime → 1000 (Register 4010 → „ 1000 ”)
  - averaging time 1 s

Setting the auxiliary input individual characteristic:
Char.In2 → Point No → Off (Register 4011 → „ 1 ”)

To display the liquid volume value at the lower line of the LCD display, set the calculated value on the auxiliary input as the second displayed value. This will also enable controlling the alarm and the analog output with the value of the measured liquid volume.
- Display → Disp.Reg → 7515 (Register 4024 → „7515”)

5.5.2. Analog output

The P30o transducer is equipped with one current type (source) or voltage type analog output depending on the variant code.

5.5.2.1. Analog output individual characteristic

The P30o transducer enables processing displayed value, value calculated from the second input and the real time clock value into analog output signal based on the individual linear characteristic of the analog output. On the basis of coordinates of two points provided by the user, the transducer determines (using a system of equations) a and b individual characteristic coefficients.

$$\begin{cases} Y1out = a \cdot X1in + b \\ Y2out = a \cdot X2in + b \end{cases}$$

where *X1 in* and *X2 in* – the displayed value, *Y1 out* and *Y2 out* – expected value on the analog output.

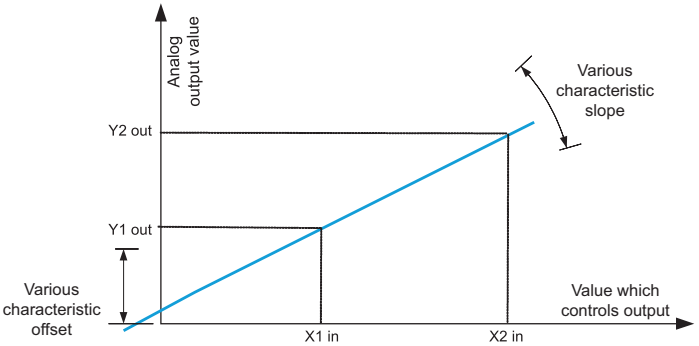

Fig. 18. Analog output individual characteristic

5.5.2.2. Analog output overflow management

In P30o transducer user can additionally configure the behaviour of the analog output after controlling output value overflow. By default, overflow management is switched off – in such a case, after controlling output value is overflowed, the output is still controlled proportionally to the controlling output value outside the basic range of the output. After the overflow management is switched on, the user can define the value to control the output after the occurrence of the upper or lower overflow of the controlling output value.

Example 3. **Analog output configuration**
The transducer set to measure period on the main input: Period T<1.5h. Individual characteristic of the current type analog output set as follows:

Table 17

Register no.	Parameter symbol in menu	Register value	Parameter value symbol in menu
4040	Param.An	0	DisplVal
4041	OverServ	0	Off
7610	AnIn Lo	20	20.000
7611	AnIn Hi	100	100.00
7612	AnOut Lo	4	4.0000
7613	AnOut Hi	20	20.000

Fig. 19 shows the reaction of the analog output when analog output overflow management is switched off – standard operation of the analog output.

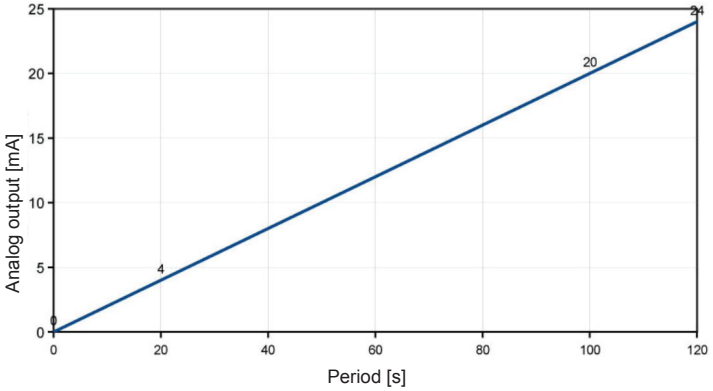

Fig. 19. Operation of the analogue output when overflow management is switched off

If in the same case the analogue output overflow management is switched on (parameters set according to table 18), the reaction of the analog output will be as is shown on fig. 20.

Table 18

Register no.	Parameter symbol in menu	Register value	Parameter value symbol in menu
4040	Param.An	0	DisplVal
4041	OverServ	0	On
7610	AnIn Lo	20	20.000
7611	AnIn Hi	100	100.00
7612	AnOut Lo	4	4.0000
7613	AnOut Hi	20	20.000
7664	OvrIn Lo	0	4.0000
7665	OvrIn Hi	1000	100.00
7666	OvrOutLo	4	4,0000
7667	OvrOutHi	3.5	3,5000

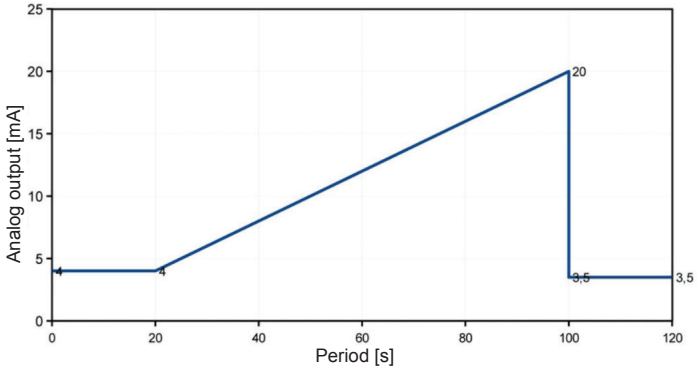

Fig. 20. Operation of the analogue output when overflow management is switched on

Example 4. **Configuration of the analogue output controlled by real time clock**

The transducer set to measure period on the main input – Period T<1.5h. The individual characteristic of the current type analog output is set, that the output reacts to current time (hour, minute), i.e. for 00:00 o'clock expected value is 4 mA, for 23:59 o'clock expected value is 20 mA:

Table 19

Register no.	Parameter symbol in menu	Register value	Parameter value symbol in menu
4040	Param.An	0	Time
4041	OverServ	1	Off
7610	AnIn Lo	0	0.0
7611	AnIn Hi	23.59	23.59
7612	AnOut Lo	4	4
7613	AnOut Hi	20	20.0

5.5.3. Alarm and power outputs

The P30o transducer is equipped with 2 relay alarm outputs with a normally open contact or with 1 relay output with a normally open contact and 1 power supply output 24 V d.c. (depending on the manufacturing variant code). Each alarm (power supply output 24 V d .c. should be treated similarly to the alarm) can operate in one of six modes. Fig. 21 shows alarm operation in the following modes: n-on, n-off, on, off. Two remaining modes: h-on i h-off mean, respectively, always on and always off. These modes are intended for manual simulation of alarm states.

In case of the transducer variant with 24 V d.c. output, the second alarm mode should be set to h-on, in such a case, the auxiliary power supply output will be constantly switched on.

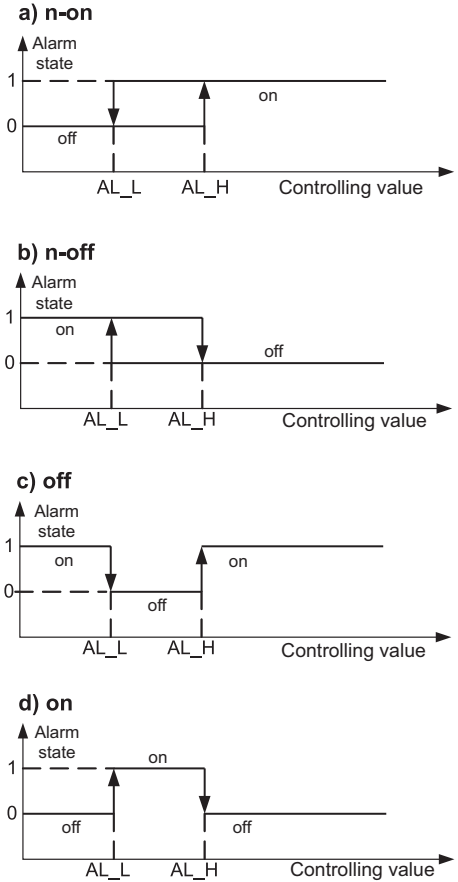

Fig. 21. Alarm types: a) n-on; b) n-off; c) on; d) off.

AL_L - Lower alarm threshold
AL_H – Upper alarm threshold

Note: If alarms are n - o n, n - o f f , o n, o f f type, entering AL_L > AL_H will switch off the alarm.

5.5.4. LCD display

The P30o traducers are equipped with a backlit LCD display consist of two lines of 8 characters each. The top line of the display is used for presenting the displayed value in floating point format (5 digits) and for displaying the SD/SDHC card or internal file system memory status pictograms, or maximum or minimum value pictograms after pressing ▲ or ◄ keys.

Table 20

Symbol	Method of display	Meaning
	constant	SD/SDHC card or internal file system memory mounted and ready to operate
	blinking	SD/SDHC card unmounted and ready for removing
	blinking	SD/SDHC card is protected against writing
	blinking	SD/SDHC card or internal file system memory is full
	constant	Displays the maximum value of displayed value (value measured and counted from main input)
	constant	Displays the minimum value of displayed value (value measured and counted from main input)

The P30o transducer automatically adjust the format (accuracy) of display to the displayed value. To fully use the function, go to menu and select Settings Display → DecimalP → 0.0000 or enter “0” in register 4021, then the transducer will display the displayed value with as much accuracy as possible. Note that a higher resolution display is not always helpful, because it may lead to a decreased stability of indications.

Measurement range overflows are indicated by displaying special signs at the upper line of the LCD display:

- vvvvvv - lower overflow of the input signal range
- ⋰⋰⋰⋰⋰⋰⋰⋰ - upper overflow of the input signal range

The lower line of the P30o transducer display is multi-functional. Press [↵] or [⊂↵] key to cycle through the functions of the bottom row of the display:

- unit (selected from the defined units or custom (section 5.4.3, table 6) with the indication of internal memory use (pkt 5.5.4. Table 20.)
- time in HH:MM:SS format
- date in DD:MM:YY format
- bargraph showing percent control of the analogue output
- the second displayed value - value of any transducer's register as a floating point number – the number of register to be displayed should be entered in register 4024 (to display the float type register value located in 16 bit registers, e.g. 7000 register, enter the number of 32 bit register corresponding to it → 7500).

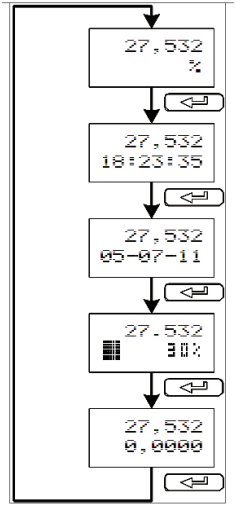

Fig. 22. Diagram of switching information displayed in the lower line of the display.

The function selected for the bottom row of the display is stored even after a power loss. LCD display can also show service information about the status of the transducer – see table 21.

Table 21

Message	Description
Restore Fabr.Par	Factory parameters must be set, e.g. following software update, transducer can operate – restore factory parameters; the message does not prevent the measured values from being displayed, it is displayed in cycles.
Fabr.Par done	Successfully restored transducer factory parameters, the transducer can operate, the message does not prevent the measured values from being displayed, it is displayed in cycles for 20 seconds.
IP renew DHCP :	Succesfully refresh ethernet communication data from DHCP server; after this information achived IP address is displayed on LCD display (only for variants equipped with Ethernet interface)

5.5.4.1. Custom unit definition

In the transducers of the P30 family, apart from the defined standard units, it is possible to define user own unit to be displayed in the lower line of the LCD display. The maximum size of the unit field is 5 characters, each character consists of 8 lines which makes 5 x 8 = 40 fields (registers) that define the unit. Custom unit has been defined in the transducers by default - the LUMEL logo. In order to display the custom unit, enter “57” in register 4020 or select the unit from the transducer menu.

To define a custom unit, use registers from 4400 … 4440 range. The following figure presents the method of defining the unit.

Character line 1			Unit character 1	Unit character 2	Unit character 3	Unit character 4	Unit character 5
Character line 8							

Fig. 23. Field intended for the unit at the lower line of the LCD display.

Register	Value	n character					
4400+(n-1)*8	0x1F		1	1	1	1	1
4401+(n-1)*8	0x10		1				
4402+(n-1)*8	0x14		1		1		
4403+(n-1)*8	0x14		1		1		
4404+(n-1)*8	0x14		1		1		
4405+(n-1)*8	0x17		1		1	1	1
4406+(n-1)*8	0x10		1				
4407+(n-1)*8	0x1F		1	1	1	1	1

Fig. 24. Method of coding a custom unit in a single display field.

5.5.4.2. Displaying two values with their units

P30U transducer enables displaying two different values witch their units - displayed value at the top row of display and the second displayed value (value of any transducer register) at the bottom row of the display. It is possible to display both values witch their units. The displayed value unit is chosen from menu Se t t i ngs → D i sp l ay → Un i t (register 4020), and the second displayed value unit is chosen from menu Se t t i ngs → D i sp l ay → Un i t 2 (register 4023). Displaying two units is only possible when on the bottom row of display is displayed second displayed value marked with sign.

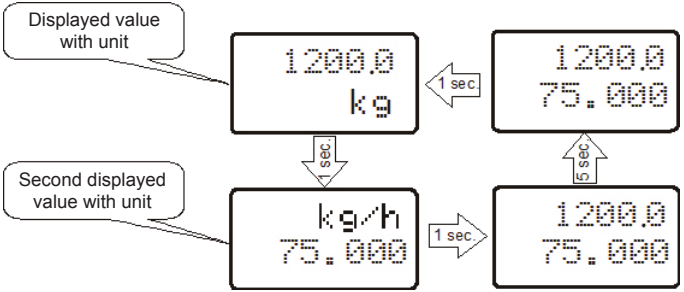

Rys 24A. Algorithm of displaying two values with their units

5.5.5. Writing and reading transducer configuration from file

P30o-X1XXXXXX and P30o-X2XXXXXX manufacturing variants of P30o transducers enable storing and reading configuration from the file located on an external SD/SDHC card or in the internal file system memory.

5.5.5.1. Storing the transducer configuration file

To store the current transducer configuration, select option : Service → SaveFile → Yes, from the menu or enter “1” in register 4077. The text file with configuration will be saved to ***P30o*** folder, file name: ***P30O_PAR.CON*** (section 5.8.4. fig. 30). Any subsequent saving the configuration file will overwrite the current file.

5.5.5.2. Reading the transducer configuration file

Reading the transducer configuration from file enables quick configuration of the transducer equipped with an external SD/SDHC card or internal file system memory. The configuration file should be located in ***P30o*** folder and its name should be ***P30O_PAR.CON***. The file can be generated by a properly configured P30o transducer or by eCon software (Modbus RS-485 or TCP/IP). In case of transducers in P30o-X2XXXXXX manufacturing variant, the file can be moved from one device to another using the FTP protocol. In case of P30o-X1XXXXXX manufacturing variants, a single external memory card can be used to transfer configuration to multiple transducers equipped with external SD card slots.

To force parameter update from file, switch on the transducer while pressing [↵] . If the configuration file contains appropriate data and the new configuration is accepted, the following message will be displayed on the transducer display:

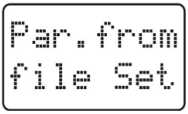

Fig. 25. Message confirming successful readout transducer configuration from file.

If the parameter update from file is forced and a proper file is missing or existing file contains corrupted data (at least one corrupted parameter), the current configuration will be maintained and the following message will be displayed:

Fig. 26. Message informing about an unsuccessful readout transducer configuration file.

5.6. Default settings

Default P30o transducer settings have been provided in table 22. These settings can be restored using transducer menu by selecting Settings Service → Fabr.Par → Yes or via RS-485 interface by entering “1” in register 4055.

Table 22

	Parameter symbol	Standard value
Main Inp	Input	Period T<20s
	AvgTime	1000
	Scale	Mulitiply
	ScaleVal	1,0000
	Ext.Func	Keyboard
	Math Fun	Off
	EraseExt	No
	RstCount	No
	Filtr.Lo	0,0500
	Filtr.Hi	0,0500
	MaxTime	21,000
	AutoRst.	99999
	Correlat	IN1/IN2
Ind.Char	Point No	Wylacz
	X1	0,0000
	Y1	0,0000
	...	
	Xn	(n-1)*100
	Yn	(n-1)*100
Aux Inp.	Input	Period T<20s
	AvgTime	1000
	Scale	Mulitiply
	ScaleVal	1,0000
	Ext.Func	No
	Math Fun	Off
	EraseExt	No

	RstCount	No
	Filtr.Lo	0,0500
	Filtr.Hi	0,0500
	MaxTime	21,000
	AutoRst.	99999
Char.In2	Point No	Off
	X1	0,1000
	Y1	0,1000
	...	
	Xn	(n-1)*100 + 0,1
	Yn	(n-1)*100 + 0,1
Display	DecimalP	0.0000
	Unit	s
	Over Lo	-99999
	Over Hi	99999
	Bcklight	On
	Bckl.Int	70,00%
	Disp.Reg	7515
	Dec.P 2	0.0000
Alarm 1 Alarm 2	Param.A1 Param.A2	DisplVal
	Type A1 Type A2	n-on
	OverLoA1 OverLoA2	0
	OverHiA1 OverHiA2	20
	DlyOnA1 DlyOnA2	0
	DlyOffA1 DlyOffA2	0
	OnLockA1 OnLockA2	0
	SgKeepA1 SgKeepA2	On

Output	Param.An	DisplVal
	AnIn Lo	0
	AnIn Hi	100
	AnOut Lo	0
	AnOut Hi	20
	OverServ	Off
	OvrIn Lo	0
	OvrIn Hi	20
	OvrOutLo	0
	OvrOutHi	0
Mbus 485	Address	1
	ModeUnit	r8n2
	BaudRate	9600
Archive	Arch.Val	DisplVal
	Param.Ar	DisplVal
	Ar. Mode	h-off
	OverLoAr	0,0000
	OverHiAr	0,0000
	Time Ar	10
	Ar.Erase	No
	Rec.ToSD	No
	Param.SD	50,000
Service	Fabr.Par	No
	Security	00000
	Time	undefined
	Date	undefined

	AutoTime	No
	DispTest	No
	Language	Polski (P30O-XXXXXXPX version) English (P30O-XXXXXXEX version)
	SaveFile	No
Ethernet (option)	DHCP	Wlaczone
	addrIP32	192.168
	addrIP10	001.030
	mask 32	255.255
	mask 10	255.000
	gate 32	192.168
	gate 10	001.001
	MAC 54	Various value – specific to each transducer
	MAC 32	
	MAC 10	
	AddrmTCP	1
	PortMbus	502
	TimeMbus	60
	no.c.TCP	4
	p.comFTP	21
	Port FTP	20
	PortHTTP	80
	LnkSpeed	Auto
	EthStdPa	No
	ReInitEt	No

5.7. Firmware update

P30o transducer enables firmware update by user using PC computer with eCon software installed. The free eCon software and update files are available at www.lumel.com.pl. RS-485 to USB converter, e.g. PD10 converter, is required for proceeding with the update.

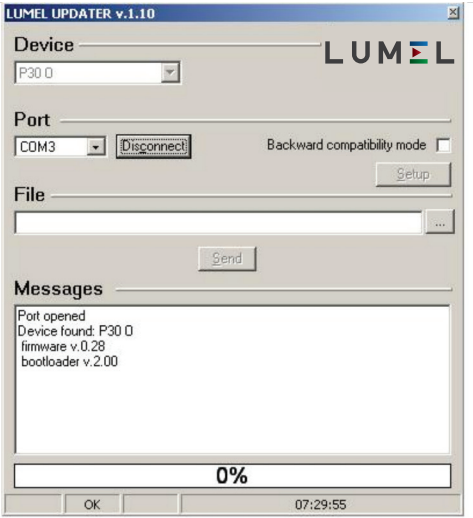

Fig. 27. Screenshot of the software for updating transducer firmware

Note! After firmware update, default transducer settings must be set, therefore it is recommended to store the transducer parameters before starting the update process using eCon software.

After starting eCon software, set the rate, mode and transducer address, as well as the RS-485 interface port in **Communication** tab. Next, click **connect** icon and read all transducer parameters (required for restoring them later). Then, click **Update firmware** link which will call LUMEL UPDATER (LU) software dialog – fig. 27. Check transmission parameters using **Setup** button and press **Connect** button. Information about the update progress are displayed in Messages box. If the port is correctly opened, **Port opened** information is displayed. There are two methods of entering updating mode in the transducer: remotely via LU (based on eCon settings – address, mode, rate, COM port) or by powering the transducer on while holding down [↵] key – update using default communication parameters, i.e. rate 9,600 kb/s, mode 8N2, or while holding down [◄] key - update using recommended communication parameters, i.e. rate 115,200 kb/s, mode 8N2. If all indicating LEDs are on and the display shows Connect UPDATER message, transducer is ready to connect with computer. If the transducer establishes communication with LUMEL UPDATER (LU) software, **Device found: P30o** message and the version of the main firmware and bootloader will be displayed, as well as the Device is ready message will be shown on the transducer display. Next, press "..." button and read the file with the new firmware version in LUMEL UPDATER. If the file opens properly, **File opened** information will be shown in the LU software window. Press **Send** button. During the update process, the indicating LEDs are switched on in a sequence, and the percent progress of update is shown on the lower line of the display. After a successful update, the transducer restarts to normal operation, whereas **Done** message and update duration are displayed in the information box (LU).

The current firmware version can also be checked by reading the welcome messages of the transducer after powering it on.

Note: Updating the firmware is only possible when the transducer and a PC computer are connected directly (no other Master devices can be connected using the RS-485 interface).

Note: Switching off the power supply during the firmware updating process may result in an unrepairable damage to the transducer!

5.8. Archiving measured values

5.8.1. Transducer memory structure

Standard P30o transducers (regardless of the manufacturing variant code) are equipped with a 4MB internal memory for storing data recorded by the transducer. The default recorded parameter is the displayed value, that is the measured value or value converted using mathematical functions and individual input characteristic. It is also possible to additionally record the value calculated from auxiliary input and the second displayed value. The internal transducer memory enables storing 534,336 records. The memory is of circular buffer type. After the memory becomes full, the oldest data is overwritten. The internal archive can be read, copied and cleared.

Transducers in P30o-X1XXXXXX variants are equipped with an SD/SDHC memory card slot enabling writing archive data to files on the external SD/SDHC memory card.

Transducers in P30o-X2XXXXXX variants are equipped with an 8GB internal file system memory (the capacity of the file system memory can be increased on a special order or due to manufacturer's needs) where the data from the internal memory are automatically copied to files. Data can be downloaded via the Ethernet interface using the FTP protocol.

Note: Changing the Archive → Arch.Val parameter value in the menu will delete the archive in the internal memory!!!

5.8.2. Internal memory

The internal transducer memory is divided into 8,192 pages. Each memory page can store 66 archive data records. Records on the page always begin from the page beginning and occupy the entire space of the page. Each memory page contains 528 bytes. The memory is divided into two areas: the first 8,096 memory pages are for the primary archive memory, whilst the last 96 pages are intended for reserve archive used during the operation of copying of archive to the SD/SDHC card or the file system internal memory (total memory is 8,096*528B + 96*528B = 4,275,312 Bytes).

The beginning of the archive data is defined by the number of the page on which there is the first record of the archive and by the initial byte which defines from which page byte the first record begins. The end of the archive is defined similarly by the number of the page on which there is the last record of the page on which there is the last record of the page and the byte where recording of the next archive record will begin.

Erasing the content of the archive internal memory is done by assigning parameters of the archive end to the archive beginning. Due to this operation, in case of deleting the archive, there is possiblity to restore the memory content.

Data in the archive internal memory are stored as records consisting of 8 bytes. The current state of internal memory use can be indicated on the LCD display after selecting the function of displaying the unit with the indication of the internal memory use status at the lower line of LCD display. Table 23 describes the meaning of the internal memory status indicator.

Table 23

Symbol								
Percent of internal memory used	87.5...100%	75...87.5%	62.5...75%	50...62.5%	37.5...50%	25...37.5%	12.5...25%	0...12.5%

5.8.2.1. Record structure

All data contained in the internal data memory are stored as records consisting of 8 bytes. The record structure has been presented in the table below

Table 24

Internal memory record (8 Bytes)					
Recording time (4 Bytes)			Data archived in float format (4 Bytes)		
Year - 2010	Month	Day	Hour	Minute	Second
6 bits	4 bits	5 bits	5 bits	6 bits	6 bits

Example 5. **Example of coding a record in the internal memory – e.g. record No. 13 on the page 559**

The record no. 13 (rec=13) on the page 559 is read out from the registers 4553 – 4556 (unsigned short registers – 2 bytes, 1 record includes 4 unsigned short registers) after entering the value 559 into the register 4500. The initial register containing the beginning of the record is found on the relationship:

R0 = 4501 + rec*4 = 4553.

Table 25

Register	HEX value
4553	0x0170
4554	0xBB95
4555	0xE87C
4556	0xB942

rec = 0x**0170BB95**E87CB942
Dana = 0xE87CB942 → (float) → 92.743958;

Table 26

<table>
<tr><th colspan="32">Czas rejestracji = 0x0170BB95 → b1011100001011101110010101</th></tr>
<tr><td colspan="6">Year + 2010</td><td colspan="4">Month</td><td colspan="5">Day</td><td colspan="5">Hour</td><td colspan="6">Minutes</td><td colspan="6">Second</td></tr>
<tr><td colspan="6">6 bits</td><td colspan="4">4 bits</td><td colspan="5">5 bits</td><td colspan="5">5 bits</td><td colspan="6">6 bits</td><td colspan="6">6 bits</td></tr>
<tr><td>0</td><td>0</td><td>0</td><td>0</td><td>0</td><td>0</td><td>0</td><td>1</td><td>0</td><td>1</td><td>1</td><td>1</td><td>0</td><td>0</td><td>0</td><td>0</td><td>1</td><td>0</td><td>1</td><td>1</td><td>1</td><td>0</td><td>1</td><td>1</td><td>1</td><td>0</td><td>0</td><td>1</td><td>0</td><td>1</td><td>0</td><td>1</td></tr>
<tr><td colspan="6">0 + 2010</td><td colspan="4">5</td><td colspan="5">24</td><td colspan="5">11</td><td colspan="6">46</td><td colspan="6">21</td></tr>
<tr><td colspan="32">10-05-24 11:46</td></tr>
</table>

Rec : 2010-05-24 11:46:21 92.743958

5.8.2.2. Downloading archived data from the internal memory

Downloading of archive data from the internal memory is performed via the memory card (option) or via the RS-485 interface. Downloading data consists in reading subsequent memory pages containing data records. eCon software enables acquiring individual pages from the internal memory.

If the transducer has been manufactured in a variant supporting external SD/SDHC cards, then the archive data can automatically be copied to the memory card (this is the fastest method of obtaining

archive data). To do this, insert the SD/SDHC card in the transducer slot (contacts facing down) and make sure that the card has been properly mounted (the top right corner of the display shows a card icon). The percent value of archive use, at which the data will automatically be copied to the card or to the file internal file system memory, must be set. This value is placed in register 7614 or can be changed using menu: Archive → Param.SD. For example if "20.0" is entered in register 7614, data will be collected in the internal transducer memory until the use of the internal memory reaches 20%, then the automatic archive copying to the SD/SDHC card or the file system internal memory process will begin. If the percent value of use will be higher, e.g. 99%, then data will be written on the SD/SDHC card less frequently, but the writing process will take longer. Writing data to the card is indicated with a progress bar graph displayed at the lower line of the LCD display. Do not remove the SD/SDHC card from the transducer slot if writing to the card is in progress, because this could lead to data corruption or device reset. Writing can be stopped and the card can be removed once it is unmounted (section 5.3.2) .

It is also possible, to force archive copy to the SD/SDHC card or file system internal memory at any time by pressing the combination of ◄ ↵ keys. If the transducer is in the variant with the Ethernet interface, the archive data can be downloaded from the file system memory via the FTP protocol using any FTP client software.

Note: If the transducer is connected to the FTP client, then copying the archive data from the internal memory to file system memory is blocked! In order to acquire current data from the archive, disconnect the FTP session and force archive copy (e.g. press ◄ ↵ keys). After copying is finished connect again transducer with FTP client software.

5.8.3. Archiving configuration

Registers 4064-4069 (table 42) and transducer menu in Settings → Archive group (table 10) are used for configuring archiving parameters. The archiving can be constant or conditional.

Triggering conditional archiving can be implemented using one of four options presented in figure 28 (n - o n, n - o f f, o f f, o n). Continuous archiving is switched on by selecting the archiving type h - o n, and it is switched off by selecting the option h - o f f.

a) n-on

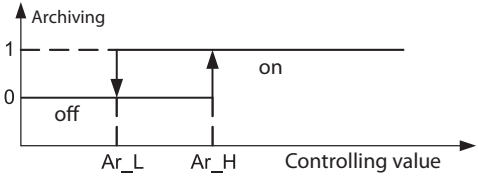

b) n-off

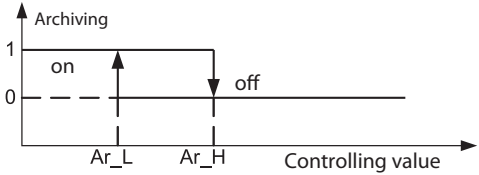

c) off

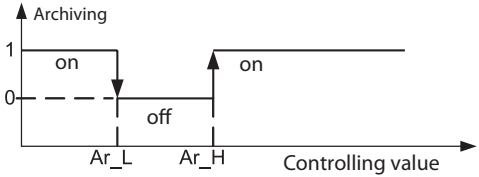

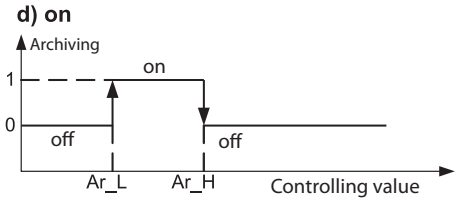

Fig. 28. Conditional archiving types

Ar_L - Lower archiving threshold → OverLoAr → Register 7608
Ar_H – Upper archiving threshold → OverHiAr → Register 7609

Example 6. **Transducer configured for measuring frequency on the main input. Conditional archiving of the displayed value triggered by the displayed value level:**

Table 27

Marking on the fig.	Register no.	Parameter symbol in tmenu	Register value	Parame-ter value symbol in menu
	4064	Arch.Val	0	DisplVal
	4065	Param.Ar	0	DisplVal
	4066	Ar. Mode	2	on
Ar_L	7608	OverLoAr	50	35.0
Ar_H	7609	OverHiAr	60	45.0
	4067	Time Ar	10	10
	4068	Ar.Erase	0	No
	4069	Rec.ToSD	0	No
	7614	Param.SD	50,0	50,0

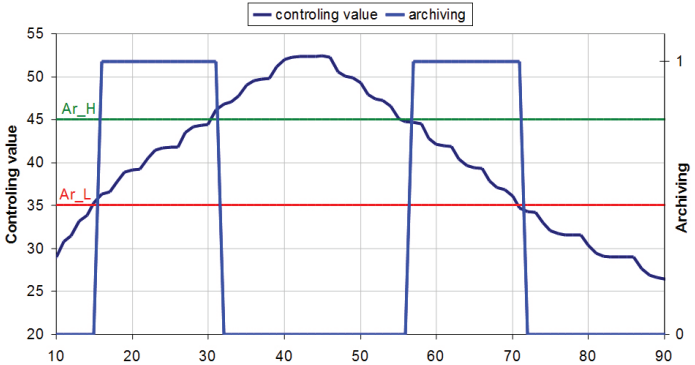

Fig. 29. Example operation of on type conditional archiving configured according to the example from table 27 (Archiving "1" means that archiving is switched on).

5.8.4. Memory card or internal file system memory (option)

P30o transducers in P30o-X1XXXXXX manufacturing variants support memory cards are compliant with SD and SDHC standard. P30o transducers in P30o-X2XXXXXX manufacturing variants are equipped with a internal file system memory – 8GB memory capacity. FAT and FAT32 file systems are supported. If the memory card is not formatted, it should be formatted in the card reader using a PC. P30o transducer creates folders and files during operation, containing archive data. Before inserting the card into the transducer, check if the card write protection option is not switched on. Do not remove the memory card from the transducer before it is unmount

(see section 5.3.2.) – unmount the card by pressing the following keys: [▲] [↵] . If a mounted card is removed, the corruption of the data stored on the memory card can be damaged. The memory card status is described in the transducer registers (sections 5.9.6, table 46). Directly after the card is inserted, the card status will be displayed for about 3 seconds on the display, as presented in the below table:

Table 28

Message	Description
Eject SD	Card inserted, but not mounted (unmounted).
SD fail.	Card inserted but the mounting attempt has been unsuccessful.
UnlockSD	Card inserted and mounted successfully, but write-protected. After write protection is detected, the card is automatically unmounted.
SD OK or SDHC OK	Card inserted and mounted successfully.
Full SD	Card inserted and mounted successfully, but it is completely full.
Install.	Card inserted – mounting in progress

An example number of records on an SD/SDHC card for 1 s archiving period for a single archiving value is the following:

- 64MB card: approx. 1 900 000 records (about 22 days)
- 2 GB card: approx. 60 800 000 records (about. 700 days)

Note: It is recommended to use industrial grade minimum class 6 SD/SDHC cards . Consumer grade cards with class 6 write speed can also be used (please note that consumer cards have operating temperature range limited to 0...40°C).

During the operation, the P30o transducer creates folders and files on the SD/SDHC memory card or in the internal file system memory. An example folder structure is shown on figure 30.

Fig. 30. Folder structure on the memory card

Apart from the ARCHIVES folder, also the SYSTEM folder is created on the card in which the start.txt file is stored to save the date and hour of installation of the memory card (also when starting the device after the power supply has been lost).

Data on the memory card or internal file system memory are stored as files located in folders corresponding to the device name and serial number – see fig. 30. File names correspond to the date of recording and have the following format YYYY_MM.DAT, where YYYY → year, MM → month. Therefore, individual files contain data archived within one month.

5.8.5. Archive file structure

Files containing archive data on an external SD/SDHC card or in the file system internal memory have a column structure, where the subsequent data columns are separated from another by a tab character. The first row contains the column header. Data records are placed in order in rows, and the fields of a given record are separated from one another with a tab character. The view of an example file has been shown in fig. 31.

date	time	value1	value2
2011-10-14	15:16:50	-2,536392e-02	0,000000e+00
2011-10-14	15:16:51	-2,536392e-02	3,742963e-04
2011-10-14	15:16:52	-2,533341e-02	7,485927e-04
2011-10-14	15:16:53	-2,531052e-02	1,122889e-03
2011-10-14	15:16:54	-2,530289e-02	1,497185e-03
2011-10-14	15:16:55	-2,531815e-02	1,871482e-03
2011-10-14	15:16:56	-2,536392e-02	2,245778e-03
2011-10-14	15:16:57	-2,536392e-02	2,620074e-03
2011-10-14	15:16:58	-2,526856e-02	2,994371e-03
2011-10-14	15:16:59	-2,534104e-02	3,368667e-03
2011-10-14	15:17:00	-2,524185e-02	3,368667e-03
2011-10-14	15:17:01	-2,532196e-02	4,117260e-03
2011-10-14	15:17:02	-2,528763e-02	4,491556e-03
2011-10-14	15:17:03	-2,534866e-02	4,491556e-03
2011-10-14	15:17:04	-2,540970e-02	5,240149e-03
2011-10-14	15:17:05	-2,539444e-02	5,614445e-03

Fig. 31. Example data file

Subsequent fields contained in the row describing the record have the following meaning:

- date – date of data recording, “-” character is the date separator
- time – hour, minute, second of data registration, “:” character is the time separator
- value1 – recorded displayed value of the transducer, the decimal separator depends on the language version set in the transducer menu – “,” character is the separator in the Polish version; “.” character is the separator for all other language versions; values are provided in the engineering format
- value2 – recorded second displayed value of the transducer, the decimal separator depends on the language version set in the transducer menu – “,” character is the separator in the Polish version; “.” character is the separator for all other language versions; values are provided in the engineering format

5.9. RS-485 Interface

The digital programmable P30o transducers are equipped with a serial interface in the RS?-485 standard to communicate in computer systems and with other Master devices. Asynchronous character communication protocol MODBUS has been implemented on the serial interface. The transmission protocol describes the methods of information exchange between devices via a serial interface.

5.9.1. Serial interface connection

RS-485 standard allows direct connection of up to 32 devices on a single serial link with the length of up to 1200 m (with the baud rate 9600 b/s). In order to connect larger number of devices, it is necessary to use additional intermediate-and-separating systems such as PD51 made by LUMEL S.A. Connection diagram is presented on the Fig. 3. In order to obtain correct transmission, it is necessary to connect the lines A and B in parallel to their equivalents in other devices. Connection should be made with a shielded cable. The cable shield should be connected to the protective terminal as close to the transducer as possible (the shield should be connected to the protective terminal at one point only).

GND line is used for additional protection of the interface line in case of long connections. In such a case, GND signals of all devices on RS-485 bus should be connected.

To obtain a connection with a PC, an RS-485 interface card or an appropriate converter, e.g. PD51 or PD10, is required. The method of connecting devices has been shown on fig. 32.

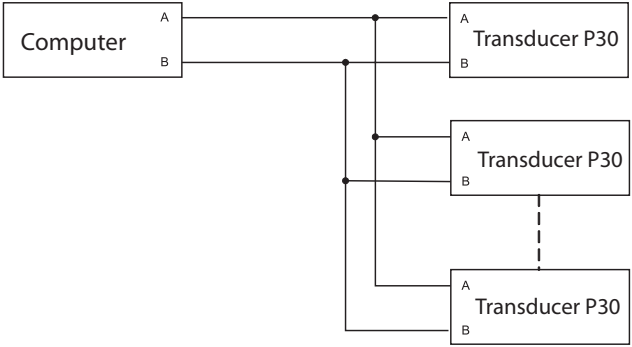

Fig. 32. Method of connecting the RS-485 interface.

The PC card transmission line marking depends on the card manufacturer.

5.9.2. MODBUS protocol description

The implemented protocol complies with Modicon's PI-MBUS-300 Rev G specification. P30o MODBUS protocol serial interface parameters:

- Transducer address 1..247.
- Transmission rate: 4800, 9600, 19200, 38400, 57600, 115200, 230400, 256000 [b/s].
- Operation mode: RTU with the frame format: 8n2, 8e1, 8o1, 8n1.
- Maximum time to start response: 200 ms (the response time may get longer up to 500ms during saving the data to the SD/SDHC card).

Serial interface configuration consists of setting the transmission rate, device address and the information unit format – protocol.

Note: Each transducer connected to the communication network must have:
- unique address, different from addresses of other devices connected to the network,
- identical baud rate and type of information unit.

5.9.3.Description of the implemented functions

The following MODBUS protocol functions have been implemented in P30o transducers:
- 03 (03h) – Read Holding Registers
- 04 (04h) – Read Input Registers
- 06 (06h) – Write Single Register
- 16 (10h) – Write Multiple registers
- 17 (11h) – Report Slave ID
- 43 (2Bh) - Encapsulated Interface Transport

Read Holding Registers (code 03h)

Example 7. Reading two float(32 bits) registers, first register address is 1DB0h (7600), register values (7600, 7601): 10.0, 100.0.

Request:

Table 29

Device address	Fun-ction	Register address		Number of registers		CRC
		B1	B0	B1	B0	
01h	03h	1Dh	B0h	00h	02h	C380h

Response:

Table 30

Device address	Function	Number of bytes	Register value 1DB0 (7600)				Register value 1DB1 (7601)				CRC
			B3	B2	B1	B0	B3	B2	B1	B0	
01h	03h	08h	41h	20h	00h	00h	42h	C8h	00h	00h	E46Fh

Example 8. Reading two float 32-bit registers (7501,7502) located in 2x2 following 16-bit registers (7002, 7003, 7004, 7005), first register address is 1B5Ah (7002) – 32-bit register values : 25.68, 20.25.

Request:

Table 31

Device address	Fun-ction	Register address		Number of registers		CRC
		B1	B0	B1	B0	
01h	03h	1Bh	5Ah	00h	04h	62FEh

Response:

Table 32

Device address	Function	Number of bytes	Register value 1B5A h (7002)		Register value 1B5Bh (7003)		Register value 1B5Ch (7004)		Register value 1B5Dh (7005)		CRC
			Register 7501 (32 bit) value				Register 7502 (32 bit) value				
			B3	B2	B1	B0	B3	B2	B1	B0	
01h	03h	08h	41h	CDh	70h	A4h	41h	A2h	00h	00h	83D0h

Example 9. Reading two float 32-bit registers (7501,7502) located in 2x2 following 16-bit registers (6002, 6003, 6004, 6005), first register address is 1772h (6002) - 32-bit register values : 25.68, 20.25.

Request:

Table 33

Device address	Fun-ction	Register address		Number of registers		CRC
		B1	B0	B1	B0	
01h	03h	17h	72h	00h	04h	E1A6h

Response:

Table 34

Device address	Function	Number of bytes	Register value 1772h (6002)		Register value 1773h (6003)		Register value 1774h (6004)		Register value 1775h (6005)		CRC
			Register 7501 (32 bit) value				Register 7502 (32 bit) value				
			B3	B2	B1	B0	B3	B2	B1	B0	
01h	03h	08h	70h	A4h	41h	CDh	00h	00h	41h	A2h	E411h

Write Single Register (code 06h)

Example 10. Writing value “543” to the register 0FA1h (4001)

Request:

Table 35

Device address	Fun-ction	Register address		Register value		CRC
		B1	B0	B1	B0	
01h	06h	0Fh	A1h	02h	1Fh	9B94h

Response:

Table 36

Device address	Fun-ction	Register address		Register value		CRC
		Hi	Lo	Hi	Lo	
01h	06h	0Fh	A1h	02h	1Fh	9B94h

Write Multiple registers (code 10h)

Example 11. Writing value “20” and “200” to registers 1DB0h (7600) and 1DB1h (7601)

Request:

Table 37

Device address	Function	Register address.Hi	Register address.Lo	Number of registers . Hi	Number of registers Lo	Number of bytes	Register value 1DB0 (7600)				Register value 1DB1 (7601)				CRC
							B1	B0	B3	B2	B1	B0	B3	B2	
01h	10h	1Dh	B0h	00h	02h	08h	41h	A0h	00h	00h	43h	48h	00h	00h	C9E2h

Response:

Table 38

Device address	Fun-ction	Register address		Number of registers		CRC
		B1	B0	B1	B0	
01h	10h	1Dh	B0h	00h	02h	4643h

Report Slave ID (code 11h)

Example 12. Report slave ID

Request:

Table 39

Device address	Function	CRC
01h	11h	C02Ch

Response:

Table 40

Device address	Function	Number of bytes	Device ID	Device state	Device-dependent field		CRC
					Firm-ware v 0.17	Registers 4304, 4305 describing the serial number and hardware configuration of the transducer (serial no.:12090002)	
01h	11h	07h	C3h	FFh	00h 17h	90h 02h E4h CCh	84A4h

Device-dependent field – 4 bytes corresponding to register value 4304, 4305 see table 46 manufacturing status 1, manufacturing status 2.

5.9.4. Register map

In the P30O transducer the data is stored in 16- and 32-bit registers. The process variables and parameters of the device are stored in the different address space depending on the variable type. The bits in the 16-bit registers are numbered from the least significant to the most significant (b0 … b15). The 32-bit registers (4 Bytes) contain floating-point values in IEEE-754 standard. Bytes sequence: B3 B2 B1 B0 – the most significant byte is sent as the first one. 16-bit registers which represents 32-bit values on a two following registers are multiplied at different address field with different bytes (word) order: B1 B0 B3 B2 (table. 41).
Register map of the P30o transducer is shown in table 41.

Note: All the given addresses are physical addresses. In some computer programs logical addressing is applied, then the addresses should be increased by 1.

Table 41

Address range	Value type	Description
4000 - 4127	integer (16 bits	The value is located in the 16-bit register
4300 - 4325	integer (16 bits)	The value is located in the 16-bit register
4400 - 4439	integer (16 bits)	The value is located in the 16-bit register
4500 - 4764	integer (16 bits)	The value is located in the 16-bit register
6000-6073	float (32 bits)	The value is located in two following 16-bit registers. Registers contain the same data as 32-bit registers from the area 7500-7537. Registers are readout type only. Byte order (B1, B0, B3, B2)
7000 -7073	float (32 bits)	The value is located in two following 16-bit registers. Registers contain the same data as 32-bit registers from the area 7500-7537. Registers are readout type only. Byte order (B3, B2, B1, B0)
6200-6437	float (32 bits)	The value is located in two following 16-bit registers. Registers contain the same data as 32-bit registers from the area 7600-7719. Registers are readout type only. Byte order (B1, B0, B3, B2)
7200-7437	float (32 bits)	The value is located in two following 16-bit registers. Registers contain the same data as 32-bit registers from the area 7600-7719. Registers are readout type only. Byte order (B3, B2, B1, B0)
7500-7537	float (32 bits)	The value is located in the 32-bit register. Registers contain measured and calculated data by the transducer. Registers are readout type only. Byte order (B3, B2, B1, B0)
7600-7719	float (32 bits)	The value is located in the 32-bit register. Registers can be read and written. Byte order (B3,B2,B1,B0)

5.9.5. Read and Write registers

Table 42

Register address (16 bit registers)	Name	Read (r)/ Write (w)	Range	Default value	Description	
4000	Input	r/w	0...9	3	Main input type	
					Value	
					0	Pulse Count.
					1	Freq. f<10kHz
					2	Rotary speed
					3	Period t < 20s
					4	Period t < 1,5h
					5	Freq. f<1MHz
					6	Running time
					7	Current time
					8	Counter IN1-IN2
					9	Encoder
4001	AvgTime	r/w	10...21000	1000	Averaging time of the measured value on the main input [ms]	
4002	Point No	r/w	1...21	1	Number of individual characteristics points for the main input. For the value of 1 individual characteristic is switched off. Sections of individual characteristic are defined with Xn and Yn parameters, where n – point number.	

4003	Scale	r/w	0...1	0	Measured value scaling type (main input)	
					Value	Description
					1	Multiplication by constant
					0	Division by constant
4004	Ext.Func	r/w	0...2	0	Permission for Start/Stop and RESET external functions for the main input .Taken into account only in counter modes: pulse counter and running time counter	
					Value	Description
					0	external control input functions switched off, access to functions only with transducer keys
					1	control input functions switched on, key access switched off
					2	external functions of control inputs and key functions switched on.
4005	Math Fun	r/w	0...5	0	Value	Description
					0	Mathematical functions on main input switched off
					1	Square of measured value
					2	Square root of measured value
					3	Inverse of measured value
					4	Inverse square of measured value
					5	Inverse square root of measured value
4006	EraseExt	r/w	0...1	0	Clears minimum and maximum values with time and date of occurrence on the main input	
					Value	Description
					0	without changes
					1	erasing minimum value
					2	erasing maximum value
					3	erasing minimum and maximum value

4007	RstCount	r/w	0...1	0	Reset counter value on the main input		
					Value		Description
					bit 0	0	without changes
						1	reset counter value on main input
					bit 1	0	without changes
						1	switching on counting permission on main input (for counter input types)
					bit 2	0	without changes
						1	switching off counting permission on main input (for counter input types)
4008	Correlat	r/w	0...5	0	Dependence selection between the main (IN1) and auxiliary (IN2) input, the dependence value is available in register 7537		
					Value		Description
					0		IN1/IN2
					1		IN2/IN1
					2		IN1*IN1
					3		IN1-IN2
					4		IN2-IN1
					5		IN1+IN2
4009	Input	r/w	0...8	3	Auxiliary input type		
					Value		
					0		Pulse Count.
					1		Freq. f < 10 kHz
					2		Rotary speed
					3		Period t < 20s
					4		Period t < 1,5h
					5		Freq. f < 1 MHz
					6		Running time
					7		Current time
					8		Setting Value

4010	AvgTime	r/w	10...21000	1000	Averaging time of the measured value on the auxiliary input [ms]	
4011	Point No	r/w	1...21	0	Number of individual characteristics points for the auxiliary input. For the value of 1 individual characteristic is switched off. Sections of individual characteristic are defined with Xn and Yn parameters, where n – point number.	
4012	Scale	r/w	0...1	0	Measured value scaling type (main input)	
					Value	Description
					0	Multiplication by constant
					1	Division by constant
4013	Ext.Func	r/w	0...1	0	Permission for Start/Stop and RESET external functions for the auxiliary input (transducer keys and/or control inputs). Taken into account only in counter modes: pulse counter and running time counter	
					Value	Description
					1	functions of external control inputs switched off, key access switched off, counter inputs constantly switched on
					0	control input functions switched on, key access switched off
4014	Math Fun	r/w	0...5	0	Value	Description
					0	Mathematical functions on auxiliary input switched off
					1	Square of measured value
					2	Square root of measured value
					3	Inverse of measured value
					4	Inverse square of measured value
					5	Inverse square root of measured value

4015	EraseExt	r/w	0...1	0	Clears minimum and maximum values with time and date of occurrence on the main input	
					Value	Description
					0	without changes
					1	erasing minimum value
					2	erasing maximum value
					3	erasing minimum and maximum value
4016	RstCount	r/w	0...1	0	Reset counter value on the auxiliary input	
					Value	Description
					0	without changes
					1	Reset counter value on the auxiliary input
4017		r/w	0...1	0	Erase transducer status registers	
					Value	Description
					0	without changes
					1	erase status registers
4018	Dec.P 2	r/w	0...4	0	Minimum decimal point of the second displayed value (Value displayed on the lower line of LCD)	
					Value	Description
					0	0.0000
					1	00.000
					2	000.00
					3	0000.0
					4	00000
4019	Intens.	r/w	1...10	7	Value	Description
					1	LCD display backlight 10% of maximum backlight
					...	
					10	LCD display backlight 100% of maximum backlight

4020	Unit.	r/w	0...57	36	Displayed unit					
					Value	Unit	Value	Unit	Value	Unit
					0		20	kVAh	40	szt
					1	V	21	MVAh	41	imp
					2	A	22	Hz	42	rps
					3	mV	23	kHz	43	m/s
					4	kV	24	Ω	44	l/s
					5	mA	25	kΩ	45	obr/mi
					6	kA	26	°C	46	rpm
					7	W	27	°F	47	mm/min
					8	kW	28	K	48	m/min
					9	MW	29	%	49	l/min
					10	var	30	%RH	50	m3/min
					11	kvar	31	pH	51	szt/h
					12	Mvar	32	kg	52	m/h
					13	VA	33	bar	53	km/h
					14	kVA	34	m	54	m^3/h
					15	MVA	35	l	55	kg/h
					16	kWh	36	s	56	l/h
					17	MWh	37	h	57	user -defined
					18	kVarh	38	m^3		
					19	MVarh	39	obr		

4021	DecimalP	r/w	0...4	0	Minimum decimal point of the displayed value – display format.	
					Value	Description
					0	0.0000
					1	00.000
					2	000.00
					3	0000.0
					4	00000
4022	Bcklight	r/w	0….61	61	LCD display backlight time	
					Value	Description
					0	always off
					1..60	active for 1...60 seconds
					61	always on
4023	Unit 2	r/w		0	Second displayed value unit, values similar to register 4020	
4024	Disp.Reg	r/w	0....65535	7515	Number of register displayed at the lower line of the display display (to display float register value located in 16 bit registers, enter the correspon-ding 32 bit register number)	
4025		r/w	0...1	0	Clearing alarm indicating on LED 's (A1, A2)	
4026	Param.A1	r/w	0...3	0	Alarm 1 control input value	
					Value	Description
					0	displayed value – value calculated from the main input
					1	value calculated from the auxiliary input
					2	Real Time Clock
					3	the second displayed value – Value set as Disp.Reg parameter

4027	Type A1	r/w	0...5	0	Alarm 1 type (description – section 5.5.3.)	
					Value	Description
					0	n-on
					1	n-off
					2	on
					3	off
					4	h-on
					5	h-off
4028	DlyOnA1	r/w	0...900	0	Alarm 1 activation delay (s)	
4029	DlyOffA1	r/w	0...900	0	Alarm 1 deactivation delay (s)	
4030	OnLockA1	r/w	0...900	0	Alarm 1 reactivation delay (s)	
4031	SgKeepA1	r/w	0...1	1	Alarm 1 indication mode	
					Value	Description
					0	alarm occurrence is indicated using A1 LED, alarm deactivation switches off A1 LED
					1	alarm occurrence is indicated using A1 LED, alarm deactivation causes blinking of A1 LED until the alarm is reconfigured or cleared with key combination
4032		r/w			RESERVED	

4033	Param.A2	r/w	0...3	0	Alarm 2 control input value	
					Value	Description
					0	displayed value – value calculated from the main input
					1	value calculated from the auxiliary input
					2	Real Time Clock
					3	the second displayed value – Value set as Disp.Reg parameter
4034	Type A2	r/w	0...5	0	Alarm 2 type (Description – section 5.5.3.)	
					Value	Description
					0	n-on
					1	n-off
					2	on
					3	off
					4	h-on
					5	h-off
4035	DlyOnA2	r/w	0...900	0	Alarm 2 activation delay (s)	
4036	DlyOffA2	r/w	0...900	0	Alarm 2 deactivation delay (s)	
4037	OnLockA2	r/w	0...900	0	Alarm 2 reactivation delay (s)	
4038	SgKeepA2	r/w	0...1	1	Alarm 2 indication mode	
					Value	Description
					0	alarm occurrence is indicated using A2 LED, alarm deactivation switches off A2 LED
					1	alarm occurrence is indicated using A1 LED, alarm deactivation causes blinking of A1 LED until the alarm is reconfigured or cleared with key ↵ ↩ combination

4039		r/w		-	RESERVED	
4040	Param.An	r/w	0..3	0	Value which controls analog output	
					Value	Description
					0	displayed value – value calculated from the main input
					1	value calculated from the auxiliary input
					2	Real Time Clock
					3	the second displayed value – Value set as Disp.Reg parameter
4041	OverServ	r/w	0...1	0	Analog output overflow management	
					Value	Description
					0	Switched off
					1	Switched on
4042		r/w		-	RESERVED	
4043	Address	r/w	0...247	1	RS-485 MODBUS network address. Enter 0 to switch off the interface.	
4044	BaudRate	r/w	0...3	0	RS-485 interface transmission mode	
					0	RTU 8N2
					1	RTU 8E1
					2	RTU 8O1
					3	RTU 8N1

4045	BaudRate	r/w	0...7	1	RS-485 interface transmission baudrate	
					Value	Description
					0	4800 bit/s
					1	9600 bit/s
					2	19200 bit/s
					3	38400 bit/s
					4	57600 bit/s
					5	115200 bit/s
					6	230400 bit/s
					7	256000 bit/s
4046...4052		r/w		-	RESERVED	
4053		r/w	0...1	0	Update transmission parameters. Accepts entered RS-485 interface settings.	
4054	Language	r/w	0...3	0	Transducer menu language:	
					Value	Description
					0	Polish
					1	English
					2	German
					3	French
4055	Fabr.Par	r/w	0...1	0	Restore default settings	
					Value	Description
					0	without changes
					1	restore default settings

4056	Security	r/w	0...9999	0	Password for changing parameters from menu	
					Value	Description
					0	without changes
					...	Entering parameter edition mode prompts for password
4057	Time	r/w	0...2359	-	Current time – hour, minute	
					This parameter uses hhmm format, where: hh – hours, mm – minutes. Wrong hour will set value to 23 and wrong minutes will set value to 59. Register 4055 is cleared after writing to register 4057	
4058		r/w	0...60	-	Current time - seconds	
4059		o	0...100	-	Current time – seconds	
4060	Date	r/w	101...1231	-	Current date in format month *100 + day	
4061		r/w	2001... ...2099	-	Current year in YYYY format	
4062		r/w	0...1	0	Auto change of summer/winter time and vice versa	
					Value	Description
					0	Switched off
					1	Switched on
4063		r/w		-	RESERVED	
4064	Arch.Val	r/w	0...2	0	Select archived values **Note:** <u>changing register value clears the archive in the internal memory!!!</u>	
					Value	Description
					0	Displayed value only – value calculated from the main input
					1	Displayed value and value calculated from the auxiliary input
					2	Displayed value, value calculated from the auxiliary input and the second displayed value

4065	Param.Ar	r/w	0...3	0	Type of input value which controls conditional archiving	
					Value	Description
					0	displayed value – value calculated from the main input
					1	value calculated from the auxiliary input
					2	time
					3	the second displayed value
4066	Ar. Mode	r/w	0...5	5	Archiving triggering condition (Description – section.5.8)	
					Value	Description
					0	n-on
					1	n-off
					2	on
					3	off
					4	h-on
					5	h-off
4067	Time Ar	r/w	1...3600	10	Archiving period (s)	
4068	Ar.Erase	r/w	0...1	0	Erasing internal archive	
4069	Rec.ToSD	r/w	0...1	0	Copy internal archive into SD/SDHC card (variant P30o-X1XXXXXX) or into internal file system memory (variant P30o-X2XXXXXX)	
					Value	Description
					0	without changes
					1	start copying the archive
4070...4076		r/w		-	RESERVED	

4077		r/w	0...2	0	Value	Description
					0	without changes
					1	write the transducer configuration to ***P30o_PAR.CON*** file on the external SD/SDHC card or on the internal file system memory
					2	read the transducer configuration from ***P30o_PAR.CON*** file stored on the external SD/SDHC card or on the nternal file system memory
4078.. ..4079		r/w		-	RESERVED	
4080	EthStdPa	r/w	0...1	0	Ethernet interface default settings	
					Value	Description
					0	without changes
					1	Restore default Ethernet interface parameters
4081	addrIP32	r/w	0...65535	49320	Third and second byte (B3.B2) of transducer's IP address, value displayed in a decimal format, IPv4 address format: B3.B2.B1.B0	
4082	addrIP10	r/w	0...65535	286	First and zero byte (B1.B0) of transducer's IP address, value displayed in a decimal format, IPv4 address format: B3.B2.B1.B0	
4083	mask 32	r/w	0...65535	65535	Third and second byte (B3.B2) of transducer's subnet mask, value displayed in decimal format, mask format: B3.B2.B1.B0	
4084	mask 10	r/w	0...65535	65280	First and zero byte (B1.B0) of transducer's subnet mask, value displayed in a decimal format, mask format: B3.B2.B1.B0	
4085	MAC 54	r	0...65535	-	Fifth and fourth byte (B5.B4) of transducer's MAC address, value displayed in a decimal format; format B5:B4:B3:B2:B1:B0	
4086	MAC 32	r	0...65535	-	Third and second byte (B3.B2) of transducer's MAC address, value displayed in a decimal format; format B5:B4:B3:B2:B1:B0	
4087	MAC 10	r	0...65535	-	First and zero byte (B1.B0) of transducer's MAC address, value displayed in a decimal format; format B5:B4:B3:B2:B1:B0	
4088	gate 32	r/w	0...65535	49320	Third and second byte (B3.B2) of transducer's default gateway, value displayed in a decimal format, gateway address format: B3.B2.B1.B0	

4089	gate 10	r/w	0...65535	257	First and zero byte (B1.B0) of transducer's default gateway, value displayed in a decimal format, gateway address format: B3.B2.B1.B0	
4090	DHCP	r/w	0...1	1	Switching DHCP client on/off (enables automatic transducer configuration which is connected to a network so it can communicate on that network using the Internet Protocol IP)	
					Value	Description
					0	DHCP switched off – manually configure transducer's IP address and subnet mask;
					1	DHCP switched on, after powering on or selecting from menu option ReInitEt the transducer will receive IP address, subnet mask and gateway address from the DHCP server, the gateway address will be the address of the server that assigned parameters to the transducer;
4091	LnkSpeed	r/w	0...2	0	Ethernet interface transmission rate	
					Value	Description
					0	automatic
					1	10 Mb/s
					2	100 Mb/s
4092	p.comFTP	r/w	20...65535	21	FTP server command port number	
4093	Port FTP	r/w	20...65535	20	FTP server data port number	
4094	no.c.TCP	r/w	1...4	4	Maximum number of simultaneous connections with Modbus TCP/IP service	
4095	TimeMbus	r/w	10...600	60	Modbus TCP/IP service port closing time, the value is given in seconds	
4096	AddrmTCP	r/w	0...255	1	Device address for Modbus TCP/IP protocol	
4097	PortMbus	r/w	0...65535	502	Modbus TCP/IP port number	
4098	PortHTTP	r/w	80...65535	80	HTTP server port number	

4099	Re I n i t E t	r/w	0...1	0	Apply a new Ethernet interface parameters	
					Value	Description
					0	without changes
					1	save a new Ethernet interface parameters and reinitiate the Ethernet interface
4100..4127		r/w			RESERVED	

Table 43

Register address (16 bit registers 1 ≤ n ≤ 5)	Read (r) / Write (w)	Range	Default value	Description
4400+8*(n-1)	r/w	0...31	-	Filling custom unit character n of line 1 (section 5.5.4.1.)
4401+8*(n-1)	r/w	0...31	-	Filling custom unit character n of line 2 (section 5.5.4.1.)
4402+8*(n-1)	r/w	0...31	-	Filling custom unit character n of line 3 (section 5.5.4.1.)
4403+8*(n-1)	r/w	0...31	-	Filling custom unit character n of line 4 (section 5.5.4.1.)
4404+8*(n-1)	r/w	0...31	-	Filling custom unit character n of line 5 (section 5.5.4.1.)
4405+8*(n-1)	r/w	0...31	-	Filling custom unit character n of line 6 (section 5.5.4.1.)
4406+8*(n-1)	r/w	0...31	-	Filling custom unit character n of line 7 (section 5.5.4.1.)
4407+8*(n-1)	r/w	0...31	-	Filling custom unit character n of line 8 (section 5.5.4.1.)

Table 44

Register address (16 bit registers)	Read (r) / Write (w)	Range	Default value	Description
4500	r/w	0...8096	0	Number of memory page that user want to download. Writing page number
4501	r	0...65535	-	Two first data bytes from the page indicated by register 4500
4502	r	0...65535	-	Two consecutive bytes
---	---	---	-	---
4764	r	0...65535	-	Two last memory page bytes (byte 526 and 527)

Table 45

Value located in two following 16 bit registers. These registers contain identical data as 32 bit registers from 7600... range	Value located in 32 bit registers	Symbol	Read (r) / write (w)	Range	Default value	Description
6200/7200	7600	MaxTime	r/w	0...5600	21	Maximum time of signal measurement on the main input, time with at least one complete periodic signal. The value is given in milliseconds.
6202/7202	7601	MaxTime	r/w	0...5600	21	Maximum time of signal measurement on the auxiliary input, time with at least one complete periodic signal. The value is given in milliseconds.
6204/7204	7602	Over Lo	r/w	-99999... 99999	-99999	Lower display range threshold
6206/7206	7603	Over Hi	r/w	-99999... ...99999	99999	Upper display range threshold
6208/7208	7604	OverLoA1	r/w	-99999... ...99999	0	Lower alarm 1 threshold

6210/7210	7605	OverHiA1	r/w	-99999... ...99999	20	Upper alarm 1 threshold
6212/7212	7606	OverLoA2	r/w	-99999... ...99999	0	Lower alarm 2 threshold
6214/7214	7607	OverHiA2	r/w	-99999... ...99999	20	Upper alarm 2 threshold
6216/7216	7608	OverLoAr	r/w	-99999... ...99999	0	Archive lower threshold
6218/7218	7609	OverHiAr	r/w	-99999... ...99999	20	Archive upper threshold
6220/7220	7610	AnIn Lo	r/w	-99999... ...99999	0	Analog output individual characteristic – lower input threshold
6222/7222	7611	AnIn Hi	r/w	-99999... ...99999	100	Analog output individual characteristic – upper input threshold
6224/7224	7612	AnOut Lo	r/w	-24...24	0	Analog output individual characteristic – lower output threshold
6226/7226	7613	AnOut Hi	r/w	-24...24	20	Analog output individual characteristic – upper output threshold
6228/7228	7614	Param.SD	r/w	5 … 100	50	Percent of internal archive use which triggers automatic copying to SD/SDHC card
6230/7230	7615	ScaleVal	r/w	-99999... ...99999	1	Constant scaling input value on the main input – scale value. Entering negative value causes counting down (pulse counter and running time counter mode).

6232/7232	7616	Filtr.Lo	r/w	0...99999	0,05	Minimum low level impulse duration. The value is given in milliseconds. Writing value < 0.05 causes setting 0.001 value.
6234/7234	7617	Filtr.Hi	r/w	0...99999	0,05	Minimum high level impulse duration. The value is given in milliseconds. Writing value < 0.05 causes setting 0.001 value
6236/7236	7618	AutoRst.	r/w	-99999... ...99999	99999	Limit value, the counter value on the main input will be reset if AutoRst. value will be overflowed, (when input is counter type)
6238/7238... 6242/7242	7619... 7621		r/w			RESERVED
6244/7244	7622	X1	r/w	-99999... ...99999	0	Main input individual characteristic point (measured value) Point no. 1.
6246/7246	7623	Y1	r/w	-99999... ...99999	0	Expected value for main input point no.1.
6248/7248	7624	X2	r/w	-99999... ...99999	100	Main input individual characteristic point no. 2.
6250/7250	7625	Y2	r/w	-99999... ...99999	100	Expected value for main input point no.2.
6252/7252	7626	X3	r/w	-99999... ...99999	200	Main input individual characteristic point no. 3.

6254/7254	7627	Y3	r/w	-99999... ...99999	200	Expected value for main input point no.3.
6256/7256	7628	X4	r/w	-99999... ...99999	300	Main input individual characteristic point no. 4.
6258/7258	7629	Y4	r/w	-99999... ...99999	300	Expected value for main input point no.4.
6260/7260	7630	X5	r/w	-99999... ...99999	400	Main input individual characteristic point no. 5.
6262/7262	7631	Y5	r/w	-99999... ...99999	400	Expected value for main input point no.5.
6264/7264	7632	X6	r/w	-99999... ...99999	500	Main input individual characteristic point no. 6.
6266/7266	7633	Y6	r/w	-99999... ...99999	500	Expected value for main input point no.6.
6268/7268	7634	X7	r/w	-99999... ...99999	600	Main input individual characteristic point no. 7.
6270/7270	7635	Y7	r/w	-99999... ...99999	600	Expected value for main input point no.7.
6272/7272	7636	X8	r/w	-99999... ...99999	700	Main input individual characteristic point no. 8.
6274/7274	7637	Y8	r/w	-99999... ...99999	700	Expected value for main input point no.8.

6276/7276	7638	X9	r/w	-99999... ...99999	800	Main input individual characteristic point no. 9.
6278/7278	7639	Y9	r/w	-99999... ...99999	800	Expected value for main input point no.9.
6280/7280	7640	X10	r/w	-99999... ...99999	900	Main input individual characteristic point no. 10.
6282/7282	7641	Y10	r/w	-99999... ...99999	900	Expected value for main input point no.10.
6284/7284	7642	X11	r/w	-99999... ...99999	1000	Main input individual characteristic point no. 11.
6286/7286	7643	Y11	r/w	-99999... ...99999	1000	Expected value for main input point no.11.
6288/7288	7644	X12	r/w	-99999... ...99999	1100	Main input individual characteristic point no. 12.
6290/7290	7645	Y12	r/w	-99999... 99999	1100	Expected value for main input point no.12.
6292/7292	7646	X13	r/w	-99999... ...99999	1200	Main input individual characteristic point no. 13.
6294/7294	7647	Y13	r/w	-99999... ...99999	1200	Expected value for main input point no.13.
6296/7296	7648	X14	r/w	-99999... ...99999	1300	Main input individual characteristic point no. 14.

6298/7298	7649	Y14	r/w	-99999...99999	1300	Expected value for main input point no.14.
6300/7300	7650	X15	r/w	-99999...99999	1400	Main input individual characteristic point no. 15.
6302/7302	7651	Y15	r/w	-99999...99999	1400	Expected value for main input point no.15.
6304/7304	7652	X16	r/w	-99999...99999	1500	Main input individual characteristic point no. 16.
6306/7306	7653	Y16	r/w	-99999...99999	1500	Expected value for main input point no.16.
6308/7308	7654	X17	r/w	-99999...99999	1600	Main input individual characteristic point no. 17.
6310/7310	7655	Y17	r/w	-99999...99999	1600	Expected value for main input point no.17.
6312/7312	7656	X18	r/w	-99999...99999	1700	Main input individual characteristic point no. 18.
6314/7314	7657	Y18	r/w	-99999...99999	1700	Expected value for main input point no.18.
6316/7316	7658	X19	r/w	-99999...99999	1800	Main input individual characteristic point no. 19.
6318/7318	7659	Y19	r/w	-99999...99999	1800	Expected value for main input point no.19.
6320/7320	7660	X20	r/w	-99999...99999	1900	Main input individual characteristic point no. 20.

6322/7322	7661	Y20	r/w	-99999... ...99999	1900	Expected value for main input point no.20.
6324/7324	7662	X21	r/w	-99999... ...99999	2000	Main input individual characteristic point no. 21.
6326/7326	7663	Y21	r/w	-99999... ...99999	2000	Expected value for main input point no.21.
6328/7328	7664	OvrIn Lo	r/w	-99999... ...99999	0	Input signal threshold value for lower overflow
6330/7330	7665	OvrIn Hi	r/w	-99999... ...99999	20	Input signal threshold value for upper overflow
6332/7332	7666	OvrOutLo	r/w	-24...24	0	Lower output overflow
6334/7334	7667	OvrOutHi	r/w	-24...24	0	Upper output overflow
6336/7336.... 6338/7338	7668... 7669		r/w			RESERVED
6340/7340	7670	ScaleVal	r/w	-99999... ...99999	1	Constant scaling input value on the auxiliary input – scale value. Entering negative value causes counting down (pulse counter and running time counter mode).
6342/7342	7671	Filtr.Lo	r/w	0...99999	0.05	Minimum low level impulse duration. The value is given in milliseconds. Writing value < 0.05 causes setting 0.001 value.

6344/7344	7672	Filtr.Hi	r/w	0...99999	0.05	Minimum high level impulse duration. The value is given in milliseconds. Writing value < 0.05 causes setting 0.001 value
6346/7346	7673	AutoRst.	r/w	-99999... 99999	99999	Limit value, the counter value on the auxiliary input will be reset if AutoRst. value will be overflowed, (when input is counter type)
6348/7348... 6352/7352	7674... 7676		r/w			RESERVED
6354/7354	7677	X1	r/w	-99999... ...99999	0.1	Auxiliary input individual characteristic point (measured value) Point no. 1.
6356/7356	7678	Y1	r/w	-99999... ...99999	0.1	Expected value for auxiliary input point no.1.
6358/7358	7679	X2	r/w	-99999... ...99999	100.1	Auxiliary input individual characteristic point no. 2.
6360/7360	7680	Y2	r/w	-99999... ...99999	100.1	Expected value for auxiliary input point no.2.
6362/7362	7681	X3	r/w	-99999... ...99999	200.1	Auxiliary input individual characteristic point no. 3.
6364/7364	7682	Y3	r/w	-99999... ...99999	200.1	Expected value for auxiliary input point no.3.
6366/7366	7683	X4	r/w	-99999... ...99999	300.1	Auxiliary input individual characteristic point no. 4.

6368/7368	7684	Y4	r/w	-99999... ...99999	300.1	Expected value for auxiliary input point no.4.
6370/7370	7685	X5	r/w	-99999... ...99999	400.1	Auxiliary input individual characteristic point no. 5.
6372/7372	7686	Y5	r/w	-99999... ...99999	400.1	Expected value for auxiliary input point no.5.
6374/7374	7687	X6	r/w	-99999... ...99999	500.1	Auxiliary input individual characteristic point no. 6.
6376/7376	7688	Y6	r/w	-99999... ...99999	500.1	Expected value for auxiliary input point no.6.
6378/7378	7689	X7	r/w	-99999... ...99999	600.1	Auxiliary input individual characteristic point no. 7.
6380/7380	7690	Y7	r/w	-99999... ...99999	600.1	Expected value for auxiliary input point no.7.
6382/7382	7691	X8	r/w	-99999... ...99999	700.1	Auxiliary input individual characteristic point no. 8.
6384/7384	7692	Y8	r/w	-99999... ...99999	700.1	Expected value for auxiliary input point no.8.
6386/7386	7693	X9	r/w	-99999... ...99999	800.1	Auxiliary input individual characteristic point no. 9.
6388/7388	7694	Y9	r/w	-99999... ...99999	800.1	Expected value for auxiliary input point no.9.
6390/7390	7695	X10	r/w	-99999... ...99999	900.1	Auxiliary input individual characteristic point no. 10.

6392/7392	7696	Y10	r/w	-99999... ...99999	900.1	Expected value for auxiliary input point no.10.
6394/7394	7697	X11	r/w	-99999... ...99999	1000.1	Auxiliary input individual characteristic point no. 11.
6396/7396	7698	Y11	r/w	-99999... ...99999	1000.1	Expected value for auxiliary input point no.11.
6398/7398	7699	X12	r/w	-99999... ...99999	1100.1	Auxiliary input individual characteristic point no. 12.
6400/7400	7700	Y12	r/w	-99999... ...99999	1100.1	Expected value for auxiliary input point no.12.
6402/7402	7701	X13	r/w	-99999... ...99999	1200.1	auxiliary input individual characteristic point no. 13.
6404/7404	7702	Y13	r/w	-99999... ...99999	1200.1	Expected value for auxiliary input point no.13.
6406/7406	7703	X14	r/w	-99999... ...99999	1300.1	Auxiliary input individual characteristic point no. 14.
6408/7408	7704	Y14	r/w	-99999... ...99999	1300.1	Expected value for auxiliary input point no.14.
6410/7410	7705	X15	r/w	-99999... ...99999	1400.1	Auxiliary input individual characteristic point no. 15.
6412/7412	7706	Y15	r/w	-99999... ...99999	1400.1	Expected value for auxiliary input point no.15.
6414/7414	7707	X16	r/w	-99999... ...99999	1500.1	Auxiliary input individual characteristic point no. 16.

6416/7416	7708	Y16	r/w	-99999... ...99999	1500.1	Expected value for auxiliary input point no.16.
6418/7418	7709	X17	r/w	-99999... ...99999	1600.1	Auxiliary input individual characteristic point no. 17.
6420/7420	7710	Y17	r/w	-99999... ...99999	1600.1	Expected value for auxiliary input point no.17.
6422/7422	7711	X18	r/w	-99999... ...99999	1700.1	Auxiliary input individual characteristic point no. 18.
6424/7424	7712	Y18	r/w	-99999... ...99999	1700.1	Expected value for auxiliary input point no.18.
6426/7426	7713	X19	r/w	-99999... ...99999	1800.1	Auxiliary input individual characteristic point no. 19.
6428/7428	7714	Y19	r/w	-99999... ...99999	1800.1	Expected value for auxiliary input point no.19.
6430/7430	7715	X20	r/w	-99999... ...99999	1900.1	Auxiliary input individual characteristic point no. 20.
6432/7432	7716	Y20	r/w	-99999... ...99999	1900.1	Expected value for auxiliary input point no.20.
6434/7434	7717	X21	r/w	-99999... ...99999	2000.1	Auxiliary input individual characteristic point no. 21.
6436/7436	7718	Y21	r/w	-99999... ...99999	2000.1	Expected value for auxiliary input point no.21.
6438/7438	7719		r/w		-	RESERVED

5.9.6. Read-only registers

Table 46

Register address (16 bit registers)	Read (r) / Write (w)	Range	Description		
4300	r	0...9999	Firmware version * 100		
4301	r	0...65535	Transducer status 1. Describes the current transducer status. The consecutive bits represent a given event. Bit set to 1 means that the event has taken place. Events can only be cleared.		
			Bit15	31	Loss of calibration parameters
			Bit14	30	RTC – loss of presets – battery error
			Bit13	29	Clock – change of winter/summer time
			Bit12	28	No communication with data memory (fram)
			Bit11	27	Wrong settings
			Bit10	26	Default settings have been restored
			Bit9	25	Main input measurement range overflow
			Bit8	24	Error in communication with internal archive memory
			Bit7	23	Archive parameters error
			Bit6	22	
			Bit5	21	100% use of the internal memory archive

			Bit4	20	Default settings must be restored after firmware update
			Bit3	19	Wrong configuration of the main input individual
			Bit2	18	Settings have been read from file on the SD/SDHC card
			Bit1	17	Wrong settings file or file is missing
			Bit0	16	Auxiliary input measurement range overflow error
4302	r	0...65535	Transducer status 2. Describes the current transducer status. The consecutive bits represent a given event. Bit set to 1 means that the event has taken place. Events can only be cleared.		
			Bit15		
			Bit14	Wrong configuration of the auxiliary input individual characteristic	
			Bit13		
			Bit12	counting permission status (for counter type inputs)	
			Bit11		
			Bit10	Control input status “START/STOP”	
			Bit9	Control input status “RESET”	
			Bit8	Main input counter cleared	
			Bit7	Auxiliary input counter cleared	
			Bit6	Analog output overflow management switched on	
			Bit5	LED2 – Alarm 2 indication	
			Bit4	LED1 – Alarm 1 indication	
			Bit3	Auxiliary input averaging time has expired	
			Bit2	Main input averaging time has expired	
			Bit1	Alarm 2 relay status	
			Bit0	Alarm 1 relay status	

4303	r	0...5	Status of the SD/SDHC memory card or file system internal memory	
			Value	Description
			0	No card inserted or internal file system memory error
			1	Card inserted, but not mounted (unmounted) or internal file system memory error.
			2	Card inserted, but unmounted or internal file system memory error.
			3	Card is mounted but protected against writing
			4	Card inserted and mounted successfully or internal file system memory is ready for operation
			5	Card inserted and mounted successfully, but memory is full or file system memory is full.
			6	Card installation in progress or internal file system memory initialization in progress
4304	r		Manufacturing status 1	
			Bit15 … Bit0	16 least significant bits of the serial number(serial number consists of 21 bits (registers 4304, 4305)and has the following structure: bits 21...16 – year (0...63) – in register 4305 bits 15...12 – month (0...12) bits 11...0 – consecutive number (1...4095)
4305	r		Manufacturing status 2	
			Bit15 ... Bit6	RESERVED
			Bit5 ... Bit0	bits 21...16 of the serial number – year (0...63)

4306	r		RESERVED	
4307	r	0...8192	Memory page specifying the beginning of the internal archive	
4308	r	0...8192	Memory page specifying the end of the internal archive	
4309	r	0...527	Byte specifying the beginning of the archive. Value in the register specifies from which byte of the archive beginning page the archive beginning is.	
4310	r	0...527	Byte specifying the end of the archive. Value in the register indicates the following byte after which the next archive record will be written.	
4311	r	0...15	Status of transducer physical inputs (“1” – high, “0”-low):	
			Bit0	“START/STOP” input status
			Bit1	“RESET” input status
			Bit2	IN2* auxiliary input status
			Bit3	IN1* main input status
			* for the main input and the auxiliary input, the input status is updated every 10 ms, therefore for signals < 10 ms status bits are not correctly signalled	
4312... ...4322			RESERVED	
4323	r	0...9999	Bootloader version * 100	

Table 47

Value located in two following 16 bit registers. These registers contain identical data as 32 bit registers from 7600... range	Value located in 32 bit registers	Name	Read (r) / write (w)	Unit	Description
6000/7000	7500	Identifier	r	-	Constant defining the device. Value “195” means P30o transducer.
6002/7002	7501	Status	r	-	Register describes the current transducer status - register 4302 value
6004/7004	7502	Analog output state	r	%	Register specifies analog output percentage state.
6006/7006	7503	Minimum 1	r	-	Minimum value of the displayed value – calculated from the main input
6008/7008	7504	Maximum 1	r	-	Maximum value of the displayed value – calculated from the main input
6010/7010	7505	Displayed value	r	-	Current displayed value – value calculated from the main input
6012/7012	7506	Current time	r	-	Current time
6014/7014	7507	Date - year	r	RRRR	Current date – year
6016/7016	7508	Month, day	r	MMDD	Current date – month, day

6018/7018	7509	Archive use	r	%	Current use state of the internal archive memory
6020/7020	7510	Value measured on the main input	r	-	Value currently measured on the main input, not calculated using a constant, individual characteristic or mathematical functions
6022/7022	7511	Value measured on the aux. input	r	-	Value currently measured on the auxiliary input, not calculated using a constant, individual characteristic or mathematical functions
6024/7024	7512	Second displayed value	r		Value displayed at the lower line of the LCD display – value of any transducer register
6026/7026	7513		r		Free space on the SD/SDHC card or on the internal file system memory (kB), “-1” means card is unmounted (memory error)
6028/7028	7514		r		Total capacity of the SD/SDHC card or the internal file system memory (kB), “-1” means card is unmounted (memory error)
6030/7030	7515	Value calculated from the auxiliary input	r	-	Value from the auxiliary input calculated by a constant, mathematical functions and individual characteristic
6032/7032	7516	Minimum 2	r	-	Minimum value of the value calculated from the auxiliary input
6034/7034	7517	Maximum 2	r	-	Maximum value of the value calculated from the auxiliary input
6036/7036	7518	Minimum 1 - date	r	-	Date of the minimum value occurrence on the main input in YYMMDD format (e.g. “130416” means 2013-04-16)

6038/7038	7519	Maksimum 1 - date	r	-	Date of the maximum value occurrence on the main input in YYMMDD format
6040/7040	7520	Minimum 1 - time	r	-	Time of the minimum value occurrence on the main input in HH.MMSS format (e.g. “9.5405” means 09:54:05 o’clock)
6042/7042	7521	Maximum 1 - time	r	-	Time of the maximum value occurrence on the main input in HH.MMSS format
6044/7044	7522	Minimum 2 - date	r	-	Date of the minimum value occurrence on the auxiliary input in YYMMDD format
6046/7046	7523	Maximum 2 - date	r	-	Date of the maximum value occurrence on the auxiliary input in YYMMDD format
6048/7048	7524	Minimum 2 - time	r	-	Time of the minimum value occurrence on the auxiliary input in HH.MMSS format
6050/7050	7525	Maximum 2 - time	r	-	Time of the maximum value occurrence on the auxiliary input in HH.MMSS format
6052/7052	7526	Pulse with 1	r	-	% of pulse with on a main input (only for input types: Freq. f<10kH, Rotary Speed., Period T<20s)
6054/7054	7527	Pulse with 2	r	-	% of pulse with on a auxiliary input (only for input types: Freq. f<10kH, Rotary Speed., Period T<20s)
6056/7056	7528	Inputs correlation	r	-	Correlation value of the main input and the auxiliary input (type of dependence is specified by the value of register 4008 – parameter Main Inp. → Correlat)
6058/7058	7529	Analog value	r	-	Value controlling the transducer analog output

6060/7060	7530	Running time	r	[s]	Value of the main input running time counter.
6062/7062	7531	Running time counter	r	[s]	Value of the auxiliary input running time counter. The value is given in seconds.
6064/7064	7532	Transducer input status	r		State of transducer physical inputs in WZYX format, where X– “START/STOP” input status Y – “RESET” input status Z – IN2* auxiliary input status W – IN1* main input status when X,Y,Z,W = “2” – high input status, when X,Y,Z,W = “1” – low input status, e.g. “2212” means high status on inputs: main IN1, auxiliary IN2 and START/STOP, and low status on “RESET” input
					* for the main input and the auxiliary input, the input status is updated every 10 ms, therefore for signals < 10 ms values W and Z are not correctly signaled
6066/7066... 6074/7074	7532... 7537		r	-	RESERVED

5.10. 10/100-BASE-T Ethernet interface

P30o transducers in P30o-X2XXXXXX manufacturing variant are equipped with an Ethernet interface enabling connection of the transducer (using RJ45 socket) to the local or global network (LAN or WAN) and using network services implemented in the transducer: WWW server, FTP server, TCP/IP Modbus slave. To use transducer's network services, configure parameters in Ethernet transducer group. Standard transducer Ethernet parameters have been shown in table 22. Transducer's IP address is the basic parameter – by default 192.168.1.30 – which must be unique within the network that the device is being connected to. The IP Address can be assigned to the transducer automatically by the DHCP server in the network, if the address downloading via DHCP option is switched on: Ethernet → DHCP → On. If the DHCP service is switched off, the transducer will operate with the default IP address enabling the user to change the IP address e.g. via transducer menu. Each transducer Ethernet parameter change requires accepting parameter changes, e.g. in menu Ethernet → ReInitEt → Yes or by entering "1" in register 4099. After accepting changes, the Ethernet interface will be reinitiated according to new parameters – all Ethernet interface services will be restarted.

5.10.1. Connecting 10/100-BASE-T Ethernet interface

To obtain access to Ethernet services, it is required to connect the transducer to the network via RJ45 socket located in the front section of the transducer, operating according to TCP/IP protocol.

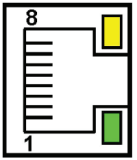

Fig. 33. View and pin order of transducer RJ45 socket

Description of transducer RJ45 socket LEDs:

- yellow LED – switched on when the transducer is properly connected to the Ethernet 100 Base-T network, switched off when the transducer is not connected to the network or is connected to 10-Base-T network
- green LED – Tx/Rx, switched on when the transducer transmits and receives data, flashes randomly, when no data is transmitted it is constantly switched on

To connect the transducer to network, the following twisted pairs are recommended:

- U/FTP – each twisted pair foiled separately
- F/FTP – each twisted pair foiled separately and additionally cable foiled,
- S/FTP (earlier SFTP) – each twisted pair foiled separately and additionally cable braided,
- SF/FTP (earlier S-STP) – each twisted pair foiled separately and additionally cable foiled and braided,

Twisted pair according to European standard EN 50171, at minimum: class D (category 5) – for fast local networks, includes applications operating at up 100 MHz frequency bandwidth. The connection description has been provided in table 48. Use category 5 STP (shielded) twisted pair cabling with RJ-45 connector with color conductors (according to table 48) meeting the following standard:

- EIA/TIA 568A for both connectors using the straight connection of the P30o to the network hub or switch,
- EIA/TIA 568A for the first connector and EIA/TIA 568B for the second connector using the crossover connection, used, among others, in the case of direct connection of the P30o transducer to the PC.

Table 48

Con-ductor no.	Signal	Conductor color acc. to standard	
		EIA/TIA 568A	EIA/TIA 568B
1	TX+	white/green	white/orange
2	TX-	green	orange
3	RX+	white/orange	white/green
4	EPWR+	blue	blue
5	EPWR+	white/blue	white/blue
6	RX-	orange	green
7	EPWR-	white/brown	white/brown
8	EPWR-	brown	brown

5.10.2. WWW server

The P30o transducer provides its own WWW server enabling remote monitoring of measured values and remote configuration as well as reading the transducer status. In particular, the website enables the following:

- receiving information about the device (serial number, manufacturing variant code, firmware version, bootloader version, variant (standard or special manufacturing variant)),
- viewing current measurement values
- reading device status,
- selecting website language.

To access the WWW server, user must enter the transducer's IP address in the internet browser, e.g.: http://192.168.1.30 (where 192.168.1.30 is the defined transducer's address). Port "80" is the standard WWW server port. The port server can be changed by the user.

Note: The website requires a browser with JavaScript switched on that is compatible with XHTML 1.0 (all leading browsers, Internet Explorer version 8 and higher).

5.10.2.1. Website general view

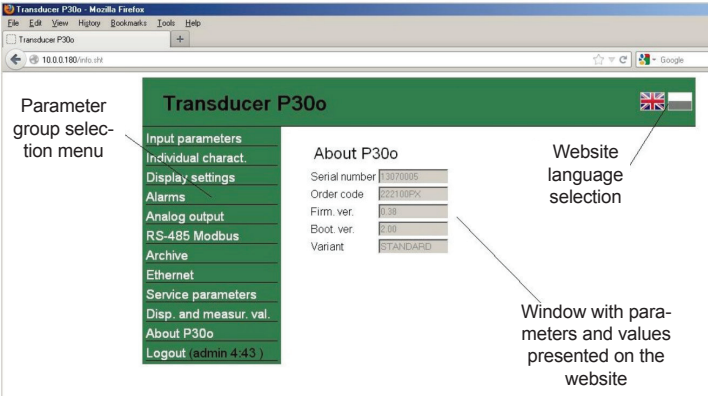

Fig. 34. View of transducer's website

5.10.2.2. WWW user selection

The transducer has two user accounts for the WWW server protected with individual passwords:

- user: „**admin**", password: „**admin**" - configuration and viewing parameter access
- user: „**user**", password: „**pass**" - only viewing parameter access

Writing the transducer's IP address in the browser, e.g. http://192.168.1.30 , will start display the log in window. User must enter name and password.

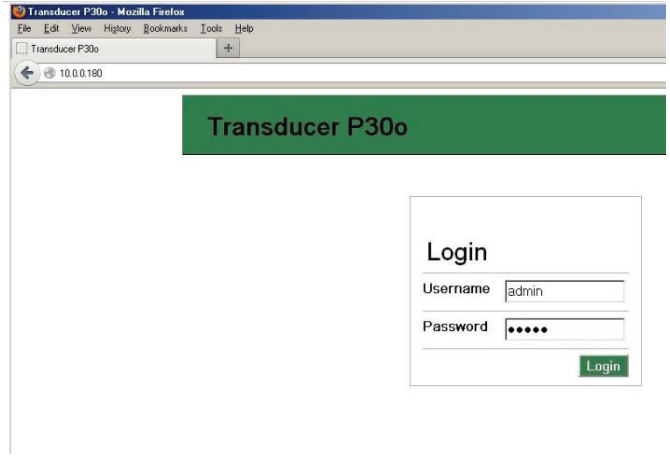

Fig. 35. View of the transducer's WWW server log in window

WWW server user names cannot be changed, but the user passwords can be changed for every user. It is recommended to change the passwords for safety reasons. Password can be changed only through the website in "Ethernet" parameters group. Passwords consist of 8 characters maximum. If user will lose password and will not be able to use the WWW server, default settings of the Ethernet interface should be restored, e.g. using menu: Ethernet → EthStdPa → Yes , or enter "1" in register 4080. All default Ethernet interface parameters (see table 22) and WWW server user passwords will be restored:
user „**admin**" → password: „**admin**" ;
user „**user**" → password „**pass**".

After logging into the WWW server, a 5 minute session is opened. After 5 minutes, the user is automatically logged out of the WWW server. Changing a parameter group renews the WWW session expiry time.

5.10.3. FTP Server

FTP protocol has been implemented in P30 transducers. The transducer operates in a server FTP mode and enables clients access to the transducer's internal file system memory. Files can be accessed by a PC, tablet with an installed FTP client software or with another device operating in FTP client mode. Port "1025" – data port and "21"– command port has been used for transmitting files via the FTP protocol. The user can change the FTP protocol ports if it's required. Please note that the ports configuration of the server and client must be identical.

The FTP client software can operate in passive or active mode. It is recommended that passive mode should be selected, because in such a case the connection is completely set up by the client (the client selects the data port). In active mode, the server selects the data port, e.g. port "1025". For transmitting files with the transducer, the maximum of one simultaneous connection can be used, therefore the maximum number of connections in the client program should be limited to "1".

5.10.3.1. FTP user selection

The transducer has two user accounts for the FTP server protected with individual passwords:

- user: „**admin**", password: „**admin**" - writing and reading file access
  user: „**user**", password: „**passftp**" - only reading file access

FTP server user names cannot be changed, but the user passwords can be changed for every user. It is recommended to change the passwords for safety reasons. Password can be changed only through the website in the "Ethernet" parameters group. Passwords consist of 8 characters maximum. If user will lose password and will not be able to use the FTP server, default settings of the Ethernet interface should be restored, e.g. using menu: E t h e r n e t → E t h S t d P a → Y e s ,or enter "1" in register 4080. All default Ethernet interface parameters (see table 22) and FTP server user passwords will be restored:
user „**admin**" → password: „**admin**" ;
user „**user**" → password: „**passftp**".

An internet browser is a basic FTP server client.

Enter the transducer's IP address with "ftp" prefix. ftp://192.168.1.30 as a browser address and download archive files directly from the internet browser.

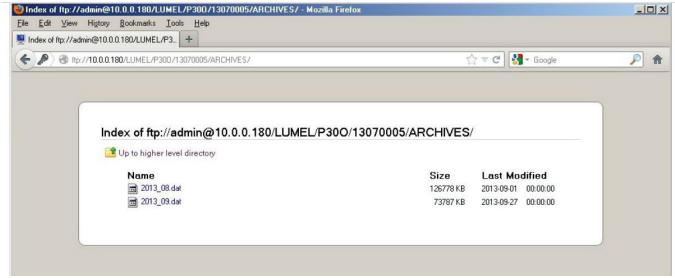

Fig. 36. View of an FTP session opened in a browser window

5.10.4. TCP/IP Modbus

P30o transducers enable access to internal registers using the Ethernet interface and TCP/IP Modbus Slave protocol. The functions of Modbus protocol and structure of registers have been discussed in section 5.9.3-5.9.6. It is required to set an unique IP address for the transducer and to set connection parameters specified in table 49 to set up the connection.

Table 49

Symbol	Description	Default value
AddrmTCP	Device address for TCP/IP Modbus protocol	1
PortMbus	TCP Modbus port number	502
TimeMbus	TCP/IP Modbus service closing time [s]	60
no.c.TCP	Maksymalna Ilość jednoczesnych połączeń z usługą modbus TCP/IP	4

The device address (Ethernet → AddrmTCP) is the device address for TCP/IP Modbus protocol and does not correspond to the address value for RS-485 Modbus protocol (Mbus 485 → Address). If AddrmTCP transducer parameter is set to “255”, the transducer will bypass the address analysis in the Modbus protocol frame (broadcast mode).

6. ACCESSORIES

For the transducers in P30o-X1XXXXXX variants that support SD/SDHC cards user can order an additional industrial SD card with the capacity adapted to the user's needs according to the table below. **It is not recommended to use consumer grade cards** due to significant deviations of their parameters and their low durability.

Table 50

Item	Order code	Capacity
1	0923-611-193	1 GB
2	0923-611-194	2 GB

7. ERROR CODES

The various error messages can be displayed during transducer operation. The table below shows a list of possible error codes and their causes, including recommended remedial actions.

Table 51

Message	Description
Err.FRM Sevice	Calibration parameters memory error – send the transducer to the service, the message prevents measured values from being displayed
Err.DF	Internal archive memory error – archiving capability is lost, the transducer can operate, consider sending the transducer to a service; the message does not prevent measured values from being displayed, message is displayed in cycles.

Err.CAL	Calibration parameters lost – send the transducer to a service, the message does not prevent measured values from being displayed, message is displayed in cycles.
Err Batt Service	Real time clock battery low voltage – loss of real time clock presets after a power loss, the transducer can operate, consider sending the transducer to a service to replace the battery; the message does not prevent measured values from being displayed, message is displayed in cycles. Changing date or hour settings switches of that message.
Err.PAR	Parameter error – restore default settings, do not operate the transducer until default settings are restored, the message does not prevent measured values from being displayed, message is displayed in cycles.
Err Ind1 Err Ind2	Parameter error – restore default settings, do not operate the transducer until default settings are restored, the message prevents measured values from being displayed until key is pressed
Error Par.File	Reading configuration from file stored on an external SD/SDHC card or on the internal file system memory unsuccessful – file is missing or corruped, the transducer can be operated, the message does not prevent measured values from being displayed, message is displayed in cycles for about 20 seconds.

8. TECHNICAL SPECIFICATIONS

Inputs:

Main input:

Table 52

Input type	Nominal range	Maximum range	Accuracy class
Pulse Counter[1]	-99999...99999	-99999..99999	±1 pulse
Frequency f < 10 kHz[1]	0.05...10000 Hz	0.05...12000 Hz	0.01
Rotary speed[1]	0...60000 [Rot/min]	0...72000 [Rot/min]	0.01
Period t < 20s[1]	0.0001...20 [s]	0.0001...21 [s]	0.01
Period t< 1,5h	0.001...5400 [s]	0.0001...5600 [s]	0.01
Frequency f < 1 MHz	0.1...1000 kHz	0.1...3000 kHz	0.05
Running time	0...99999 [h]	0...99999 [h]	0.5 sec/ 24h
Current time	00.00...23.59	00.00 ... 23.59	0.5 sec/ 24h
Counter IN1-IN2[1]	-99999...99999	-99999...99999	±1 pulse
Encoder[1]	-99999...99999	-99999...99999	±1 pulse

Auxiliary input:

Table 53

Input type	Nominal range	Maximum range	Accuracy class
Pulse Counter[1]	-99999...99999	-99999..99999	±1 impuls
Frequency f < 10 kHz[1]	0,05...10000 Hz	0,05...12000 Hz	0.01
Rotary speed[1]	0...60000 [Rot/min]	0...72000 [Rot/min]	0.01
Period t < 20s[1]	0.0001...20 [s]	0,0001...21 [s]	0.05
Period t< 1,5h	0.001...5400 [s]	0,0001...5600 [s]	0.01
Frequency f < 1 MHz	0,1...1000 kHz	0,1...3000 kHz	0.05
Running time	0...99999 [h]	0...99999 [h]	0.5 sec/ 24h
Current time	00.00...23.59	00.00 ... 23.59	0.5 sec/ 24h
Setting Value	-99999...99999	-99999...99999	-

[1] The minimum duration of high or low signal level is 40us – measured values can be wrong if for the threshold frequency of 10kHz the impulse-width is < 30% or higher than 70%.

- minimum control input pulse duration (START/STOP, RESET external functions) > 10ms
- input and control signal level 5 ...24V d.c.

Output:

- analog output - programmable, insulated galvanically, current (0/4...20 mA, load resistance ≤ 500 Ω) or voltage (0...10 V, load resistance ≥ 500 Ω),
- analog output accuracy class 0.1;
- analog output conversion time < 40 ms
- relay – 1 or 2 relays; voltage free contacts, normally open, maximum load capacity 5 A 30 V d.c. or 250 V a.c.
- digital – RS-485 interface:
    - transmission protocol:: modbus RTU
    - address: 1...247
    - tryb: 8N2, 8E1, 8O1, 8N1
    - transmission rate: 4800, 9600, 19200, 38400, 57600, 115200, 230400, 256000 [b/s]
    - maximum time to start response: 200 ms[2]
- auxiliary power supply (option) 24 V d.c. / 30 mA.
- clock accuracy 1 s / 24 h

Power consumption < 6 VA

Weight < 0.25 kg

Dimensions 120 x 45 x 100 mm

Mounting 35 mm rail acc. to EN 60715

Insured protection grade by the housing

housing-side (variant incompatible with SD/SDHC cards)	IP40
housing-side (variant compatible with SD/SDHC cards)	IP30
terminals-side	IP20

Display	alphanumeric LCD display 2x8 characters with LED backlight
Warm-up time	15 min

Recording

Recording into the internal 4 MB memory (max. 534,336 records) – recording with time stamp, for variants compatible with SD/SDHC - possiblity to automatically writing internal archive into SD/SDHC cards.

Reference conditions and nominal operational conditions

- supply voltage 85..253 V d.c./a.c.(40..400 Hz) or 20..40 V a.c.(40..400 Hz), 20...60 V d.c.
- ambient temperature -25..23..+55 °C
- storage temperature -30..+70 °C
- humidity 25..95 % (condensations not acceptable)
- operating position any

Additional errors:

due to temperature variations:

- for the analog outputs (current type) 50% of the out. class/10 K
- for the analog outputs (voltage type) 100% of the out. class/ 10K
- for the measuring inputs 50% of the input. class/10 K

Standards met by the transducer

Electromagnetic compatibility:

- disturbance immunity acc. to EN 61000-6-2
- disturbance emission acc. to EN 61000-6-4

[2] The maximum time to start response can extend to 500 ms during data writing into the SD/SDHC card or in the internal file system memory

Security requirements acc. to EN 61010-1

-	isolation between circuits	basic,
-	installation category	III
-	pollution grade	2
-	phase-to-earth working voltage:	300 V for the power supply circuit and 50 V for other circuits
-	altitude above sea level	< 2000 m

9. ORDERING CODE

Table 54

P30O -	X	X	X	X	XX	X	X
Analog output:							
current (0/4...20 mA)	1						
voltage (0...10 V)	2						
Additional equippment:							
without any		0					
with external SD/SDHC slot		1					
with Ethernet interface and internal file system memory		2					
Additional output:							
Relay (normally opened) 5 A 30 V d.c., 250 V a.c.			1				
supply 24 V d.c. / 30 mA			2				
Supply:							
85...253 V a.c./d.c.				1			
20...40 V a.c., 20...60 d.c.				2			
Version:							
standard					00		
custom-made*					XX		
Language:							
Polish						P	
English						E	
other*						X	
Acceptance tests:							
without extra requirements							0
with an extra quality inspection certificate							1
according to customer's request*							X

* after consultation with manufacturer

Example 13. Coding example:

Kod **P30O-112100E1** means a transducer in a standard version with a current analogue output, supporting external SD/SDHC cards, with 24 V/30 mA power output, 85...235 V a.c./d.c. power supply, in English language version and a Quality Control Certificate.

LUMEL
EVERYTHING COUNTS

LUMEL S.A.
ul. Słubicka 1, 65-127 Zielona Góra, POLAND
tel.: +48 68 45 75 100, fax +48 68 45 75 508
www.lumel.com.pl,
e-mail: lumel@lumel.com.pl

Export department:
tel.: (+48 68) 45 75 139, 45 75 233, 45 75 321, 45 75 386
fax.: (+48 68) 32 54 091
e-mail: export@lumel.com.pl

P30O-09