EUROTEC
TECNOLOGIE IMPIANTISTICHE - AUTOMAZIONE - TELECONTROLLO

LUMEL
EVERYTHING COUNTS



NS5
- SYNCHRONIZATION METER

- Clear data visualization thanks to color graphic display 3.5"TFT (separately for the synchroscope, differential voltmeter, frequency meter);
- Range of input signals: 50...150 V or 150...400 V;
- Direct or indirect measurement through voltage transformers;
- Additional control inputs: BLK - lock synchronization, START - start synchronization
- Programmable hysteresis of voltage difference, frequency, and phase shift angle
- **Ethernet interface 10/100 BASE-T** for connecting the synchronization meter to the local area network (LAN) or the global one (WAN);
- Network services: web server, Modbus TCP / IP, DHCP server;
- RS-485 interface with Modbus RTU protocol;
- Password protection for two accounts of Web Server user,
- Measurement of the minimum and maximum values of voltage and frequency
- External dimensions: 96 x 96 x 77mm.

Electrical Safety CAT III

CE

EXAMPLE OF APPLICATION

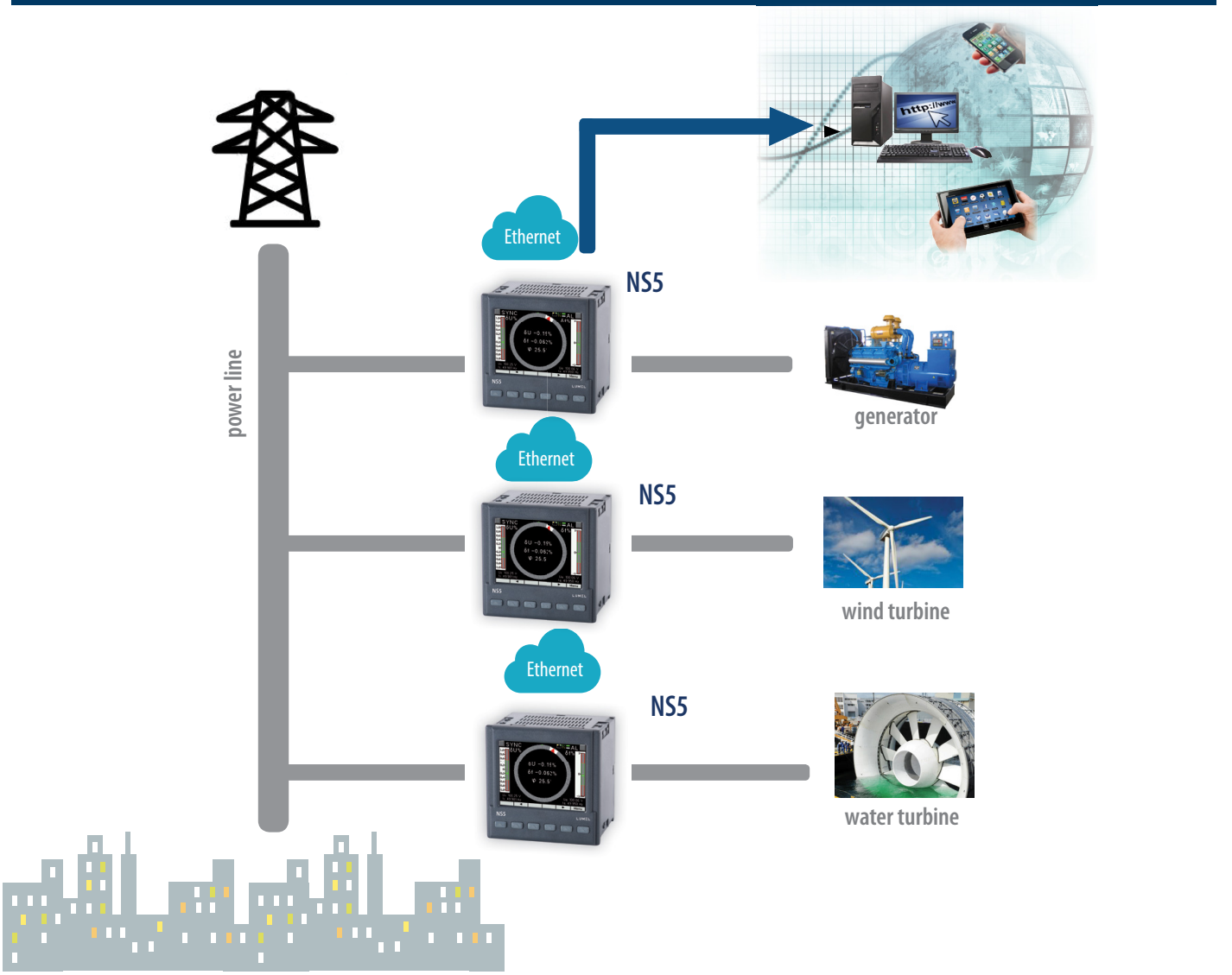

NS5 - SYNCHRONIZATION METER

LUMEL
EVERYTHING COUNTS

FEATURES

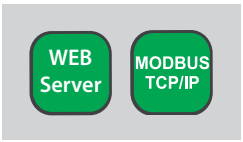

INPUTS

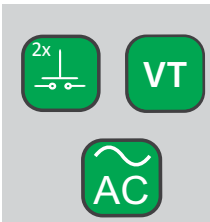

OUTPUTS

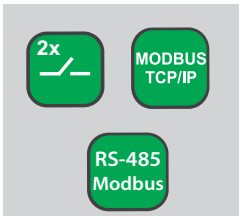

GALVANIC ISOLATION

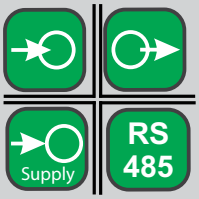

TECHNICAL DATA

MEASURING RANGE

Measured value	Measuring range	Resolution	Class/ basic error
Voltage Un: 50 ... 150 V~ 150 ... 400 V~	20 ...180 V 60 ... 480 V ...1920 kV (tr_U≠1)	0.1 V 0.1 V 0.01 kV	0.2 (EN 61557-12)
Voltage difference δU	-20..0..20 %	0.1%	0.5 (EN 61557-12)
Frequency f	45 ..65 Hz	0.001 Hz	0.02 (EN 61557-12)
Frequency difference δf	-10..0..10 %	0.01%	0.02 (EN 61557-12)
Phase shift φ	0..360°	0.1°	±0.5°

tr_U - ratio of voltage transformer = transformer primary voltage / transformer secondary voltage

INPUTS

Input type	Properties
Control inputs (BLK, START)	2 voltage input 20..250 V d.c./a.c. Power consumption per input ≤ 0.25 W

OUTPUTS

Output type	Properties	
Relay outputs (AL, SYNC)	2 programmable relays, NO contacts, resistance load 0.5 A/250 V a.c. or 5 A/30 V d.c.; activation time of the relay - max. 8 ms; Number of switching: mechanical - miniumum 5 x10 ^{6}, electrical - minimum 1 x 10 ^{5}	Refers to NS5-XXX01XX special version: 2 programmable relays, volt free NO contacts, resistive load 1 A / 300 V a.c. / d.c. Relay operate time 10 ms (max), Number of switchings: mechanical minimum 3 x 10 ^{7}, electric minimum 3 x 10 ^{4}

DIGITAL INTERFACE

Interface type	Transmission protocol		Remarks
RS-485	Modbus RTU 8N2, 8E1, 8O1, 8N1	Adres 1..247	baud rate: 4.8, 9.6, 19.2, 38.4, 57.6, 115.2 kbit/s
Ethernet 10/100 Base-T	Modbus TCP/IP, DHCP client		RJ45 socket, WWW server

EXTERNAL FEATURES

Readout field	graphic color display LCD TFT 3,5", 320 x 240 pixels	
Overall dimensions	96 x 96 x 77 mm	mounting hole 92.5 x 92.5 mm
Weight	0.3 kg	
Protection grade	from frontal side: IP65	from terminal side: IP20

RATED OPERATING CONDITIONS

Supply voltage	~ 85..253 V a.c. (40..50..400) Hz or 90..300 V d.c. or 20..40 V a.c. (40..50..400) Hz or 20..60 V d.c.	
Power consumption	in supplying circuit ≤ 6 VA	in voltage circuit ≤ 0.5 VA
Input signal	0.2..0.4..1.2 U_n	frequency 45...50...60...65 Hz, sinusoidal (THD ≤ 8%)
Phase shift	0 .. 360° for frequency $f_n \pm$ 5 Hz (for f_n = 50 or 60 Hz)	
Preheating time	15 min.	
Ambient temperature	-10...23...55°C, class K55 acc. to EN 61557-12	
Humidity	0...40...65...95%	without condensation
Operating position	any	
External magnetic field	≤ 40...400 A/m d.c.	≤ 3 A/m a.c. 50/60 Hz
Short-term overload	voltage input: 2 Un (5 sek.)	
Admissible crest factor	current: 2	

SAFETY AND COMPABILITY REQUIREMENTS

Electromagnetic compatibility	noise immunity	acc. to EN 61000-6-2
	noise emissions	acc. to EN 61000-6-4
Isolation insured by the casing	double	acc. to EN 61010-1
Isolation between circuits	basic	acc. to EN 61010-1
Polution level	2	acc. to EN 61010-1
Installation category	III for phase-to-earth voltages up to 300 V	acc. to EN 61010-1
Maximal phase-to-earth voltage	• for supplying circuits and relay outputs 300 V • for measuring inputs 300 V • for circuits RS-485, Ethernet: 50 V	acc. to EN 61010-1
Altitude a.s.l.	< 2000 m	

CONNECTION DIAGRAMS

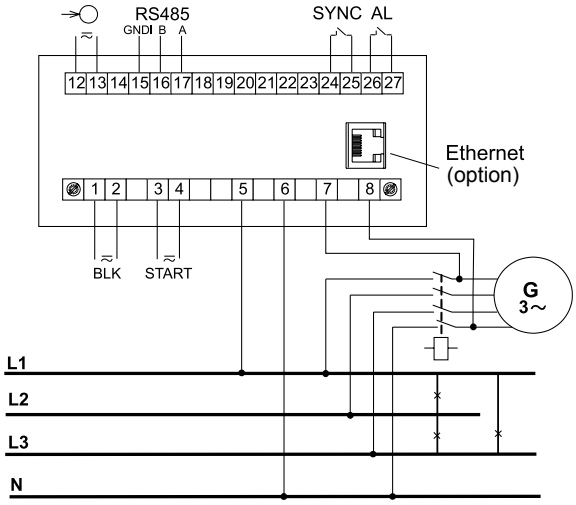

Meter connections - measurement phase voltages

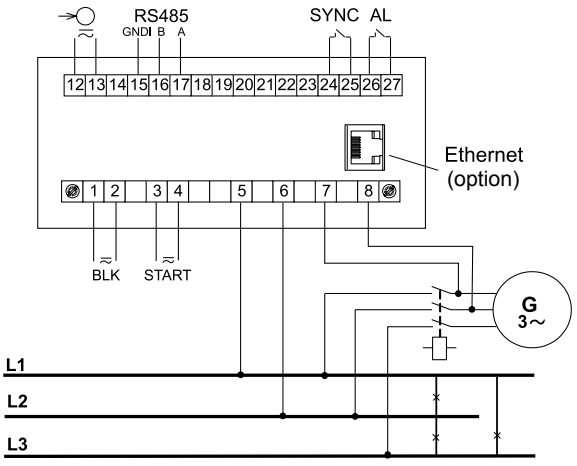

Meter connections - measurement phase-to-phase voltages

DISPLAYING OF MEASUREMENTS PARAMETERS

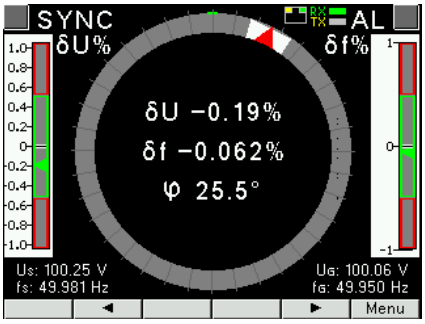

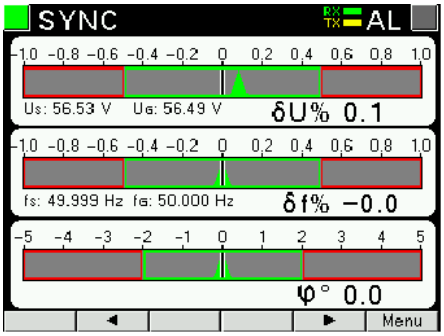

Visualization of measurement (synchroscop, bargraphs)

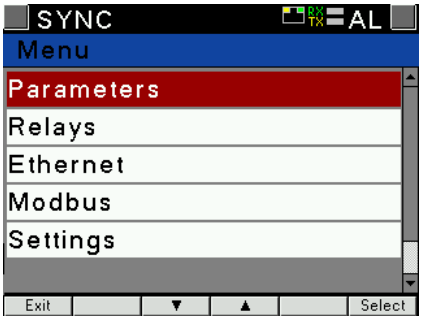

easy to use and intuitive menu

METER CONFIGURATION WITH FREE **eCON** SOFTWARE

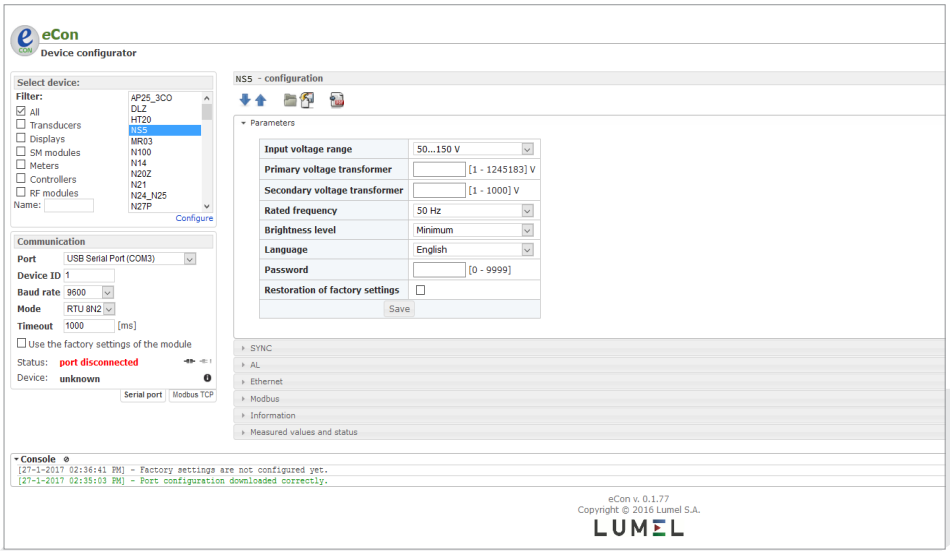

ability to configure and update NS5 with free eCon software (via RS-485 or Ethernet interface)

NS5 - SYNCHRONIZATION METER

REMOTE READOUT OF PARAMETERS THROUGH ETHERNET: **WWW SERVER**

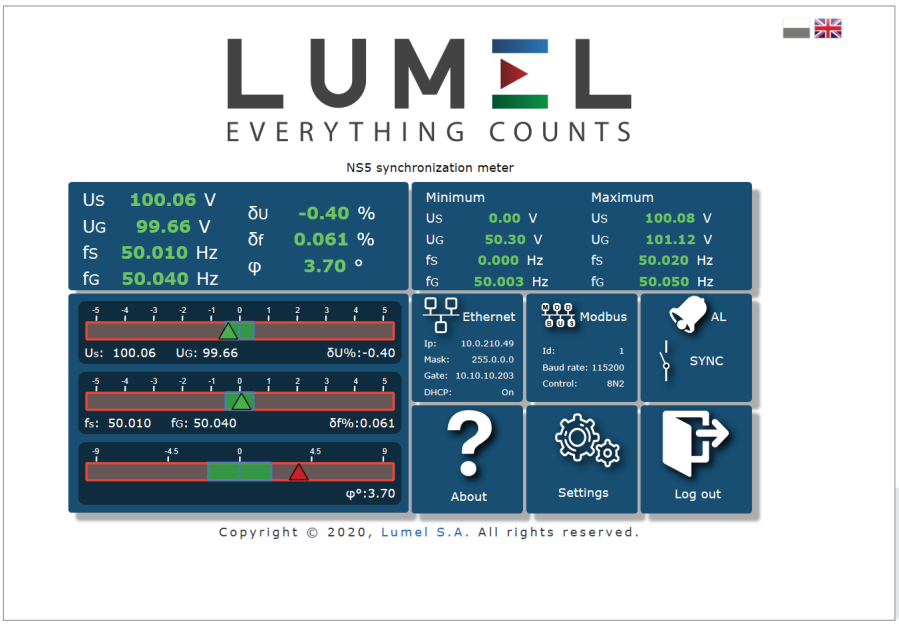

WEB server for remote reading of current measurement data

ORDERING CODE

	NS5	X	X	X	XX	X	X
Input voltage Un*:							
50...150 V		1					
150...400 V		2					
Interface:							
RS-485			1				
RS-485 and Ethernet			2				
Supply:							
85...253 V a.c., 90...300 V d.c.				1			
20...40 V a.c., 20...60 V d.c.				2			
Version:							
standard					00		
custom made G234 relay 1A/300V a.c./d.c.					01		
custom-made**					XX		
Language:							
Polish/ English						M	
other**						X	
Acceptance tests:							
without additional quality requirements							0
with an extra quality inspection certificate							1
with calibration certificate							2
acc.to customer's request							X

* Un - phase and phase-to-earth voltage (programmable in selected range);
maximal phase-to-earth voltage 300 V,
** after agreeing with the manufacturer

Order example:
The code: **NS5 12100M0** means:
NS5 –synchronization meter
1 – input voltage 50...150 V,
2 – RS485 and Ethernet,
1 –supply 85..253 V a.c., 90..300 V d.c.
00 – standard version,
M - Polish/English language version,
0 - without additional quality requirements.

Castel Maggiore (BO) 40013
Via Lirone 60/i

e-mail: info@eurotecsrl.com
Tel: +39 051/6321595
Website: www.eurotecsrl.com

C.F.: 04103780377
P.I.: 01596581205