EUROTEC
TECNOLOGIE IMPIANTISTICHE - AUTOMAZIONE - TELECONTROLLO

LUMEL

RAIL MOUNTED POWER NETWORK METER WITH PROFINET

NR30PNET



USER'S MANUAL

CE

Contents

1 APPLICATION 2
2 METER SET 2
3 BASIC REQUIREMENTS, OPERATIONAL SAFETY 2
4 INSTALLATION 3
5 DESCRIPTION 3
5.1 Current inputs 3
5.2 Voltage inputs 3
5.3 Connection of the meter 4
5.4 External connections diagram 5
6 COOPERATION WITH S4AO 8
7 NR30PNET PROGRAMMING 9
7.1 Frontal panel 9
7.2 Messages after Switching the Supply on 10
7.3 Starting operation 10
7.4 Language selection 11
8 OPERATING MODES 11
8.1 Measurement mode 14
8.1.1 Measurement of voltage and current harmonics 14
8.2 Parameters mode 15
8.3 Alarm mode 16
8.4 Display mode 21
8.5 Ethernet/ Profinet mode 24
8.6 Modbus mode 24
8.7 Settings mode 25
8.8 Information mode 25
9 SERIAL INTERFACES 26
9.1 RS485 INTERFACE – the list of parameters 26
9.2 Examples of registers reading and saving 26
9.3 Ethernet/ Profinet 10/100-BASE-T 29
9.3.1 Connection of 10/100 BASE-T interface 29
10 MAP OF REGISTERS OF NR30PNET METER 30
11 FIRMWARE UPGRADE 49
11.1 Firmware upgrade - the main program of the meter 49
12 ERROR CODES 50
13 TECHNICAL DATA 51
14 ORDERING CODES 54

1 APPLICATION

NR30PNET meter is a digital programmable instrument designed to measure network parameters of single-phase 2-wire and three-phase 3 and 4-wire balanced and unbalanced systems. The measured values are displayed on a 20 x 4 LCD character display. The meter enables controlling and optimizing the operation of power electronics devices, systems and industrial installations.
It provides measurement of: RMS voltage and current, active, reactive and apparent power, active, reactive and apparent energy, power factors, frequency, harmonic currents and voltages / up to 51st /, THD of current and voltage, average active and apparent power, P Demand, S Demand, averaged current I Demand /15, 30 or 60 minutes/. Voltages and currents are multiplied by given voltage and current ratios of measuring transformers / for indirect connections /. Indications of power and energy take into consideration values of programmed ratios. The values of the measured quantities can be transmitted to the host system through RS485 Modbus RTU interface or Ethernet - Profinet interface, relay outputs signal overruns of the selected parameters.

The meter has a galvanic separation between the individual blocks of:

- power supply,
- voltage inputs,
- current inputs (for versions In 1 A/ 5 A),
- RS485 Interface,
- Ethernet/Profinet Interface:
- alarm outputs,

2 METER SET

Complete set of the Analyzer includes:

1. NR30PNET meter	1 pc.
2. User’s manual	1 pc.

3 BASIC REQUIREMENTS, OPERATIONAL SAFETY

In terms of operational safety, the meter meets the requirements of DIN EN 61010-1.

Safety instructions:

- The meter installation and connection should be made by qualified personnel. All available protection requirements must be taken into consideration.
- Before turning the meter on verify the connections.
- Prior to removing the meter housing, always turn the supply off and disconnect the measurement circuits.
- Removal of the meter housing during the warranty period voids the warranty.
- The meter meets the requirements for electromagnetic compatibility in industrial environment.
- A switch or a circuit-breaker should be installed in the building or facility. It should be located near the device, easily accessible to the operator, and suitably marked.

4 INSTALLATION

The meter is adapted for installation in a modular installation switchgears on a 35 mm support rail. The housing of the meter is made of plastic.

Housing dimensions are 105 x 110 x 60 mm. Outside the meter there are screw terminal strips that allow connection of external wires with a cross-section up to 5.3 mm^2 / indirect measurements/ and up to 16 mm^2 /direct measurements.

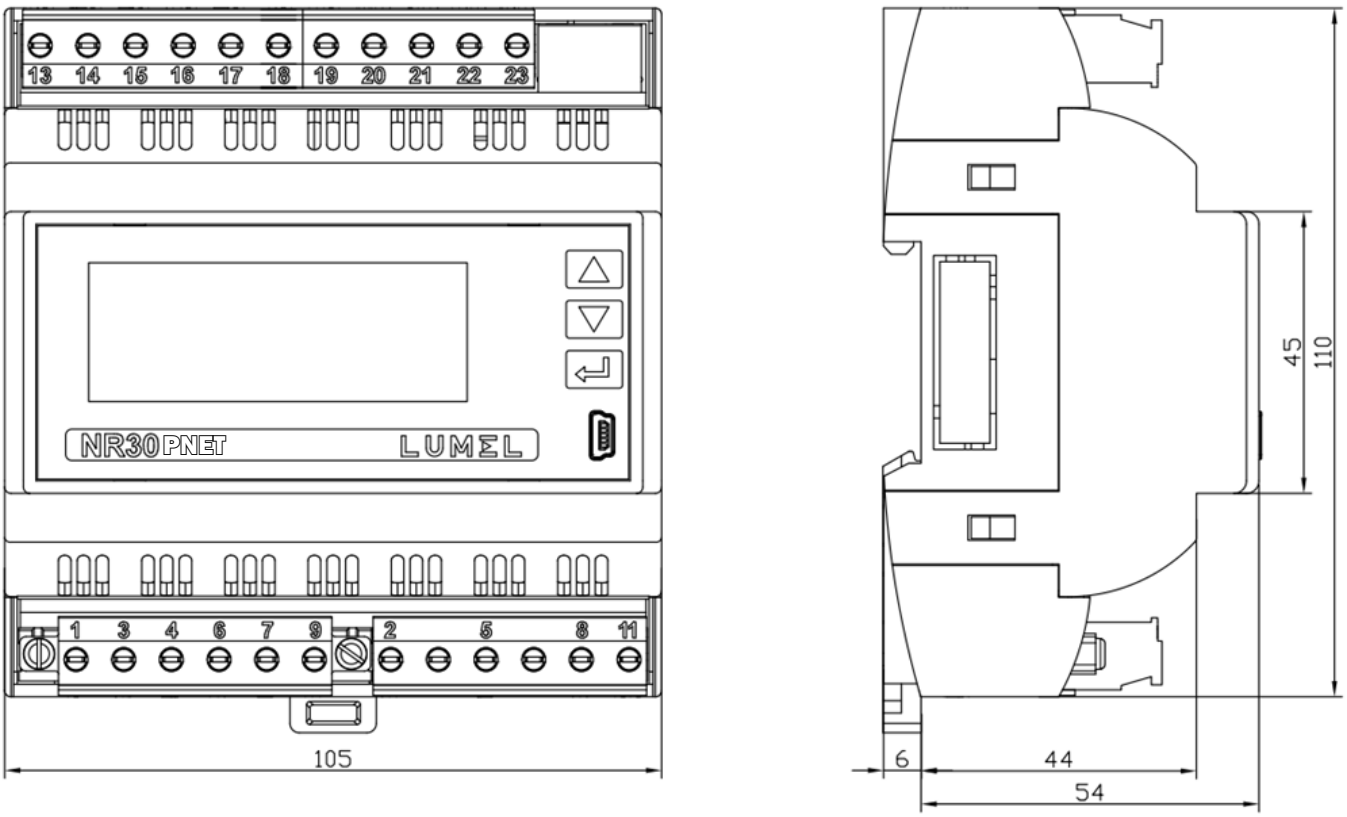

Fig.1. Overall dimensions of NR30PNET meter

5 DESCRIPTION

5.1 Current inputs

All current inputs are galvanically isolated (internal current transformers). The meter is adapted for direct connections / up to 63 A / or for use with external current transformers / 1 A or 5 A /. Displayed values of currents and derivative quantities are automatically converted according to the introduced external current transformer ratio.

5.2 Voltage inputs

Quantities at voltage inputs are automatically calculated by the amount of introduced ratio of the external voltage transformer. Voltage inputs are defined in the order as 3x57.7/100 V up to 3x100/170 V or 3x230/400 V up to 3x400/690 V.

5.3 Connection of the meter

Description of the meter external terminals is shown in Fig 2.

a)

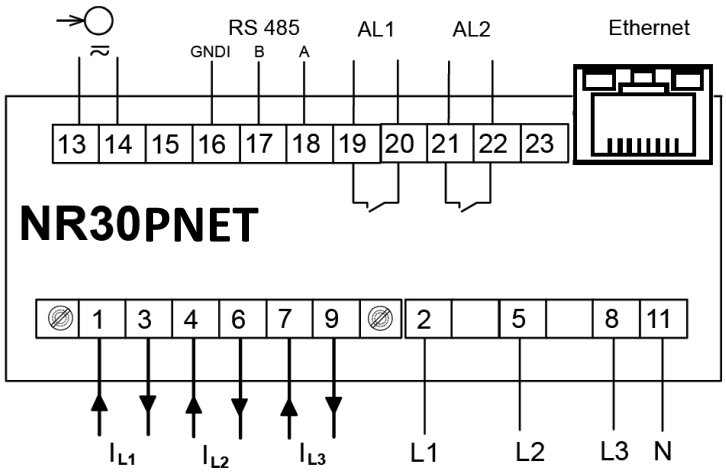

b)

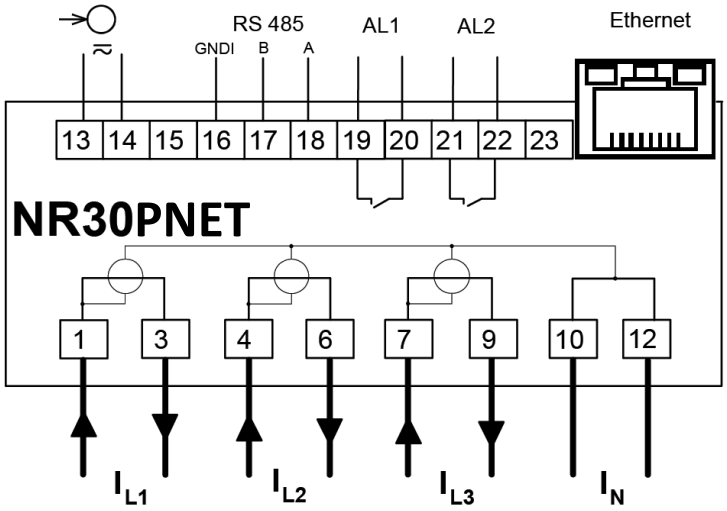

Fig.2. Connection of the meter: a) in the version for indirect connections (1 / 5 A)

b) in the version for direct connections (63 A)

5.4 External connections diagram

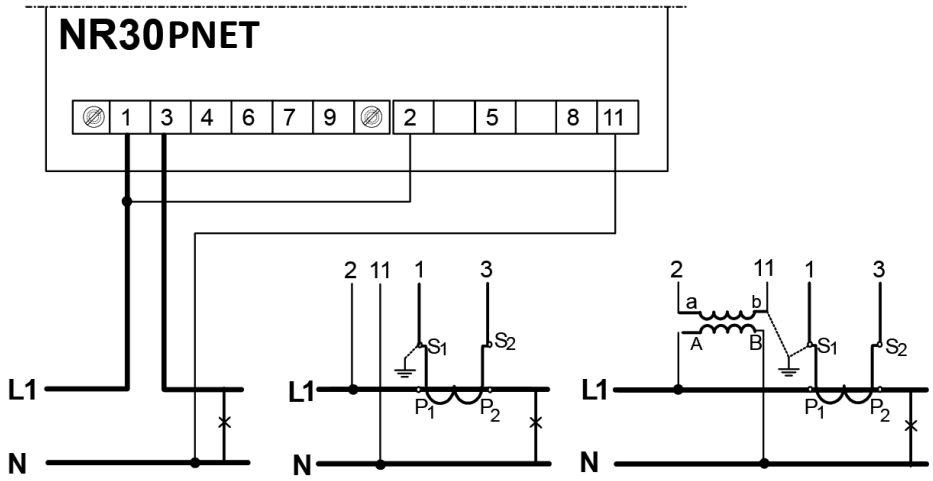

Fig.3. Direct, semi-direct and indirect measurement in 1-phase network

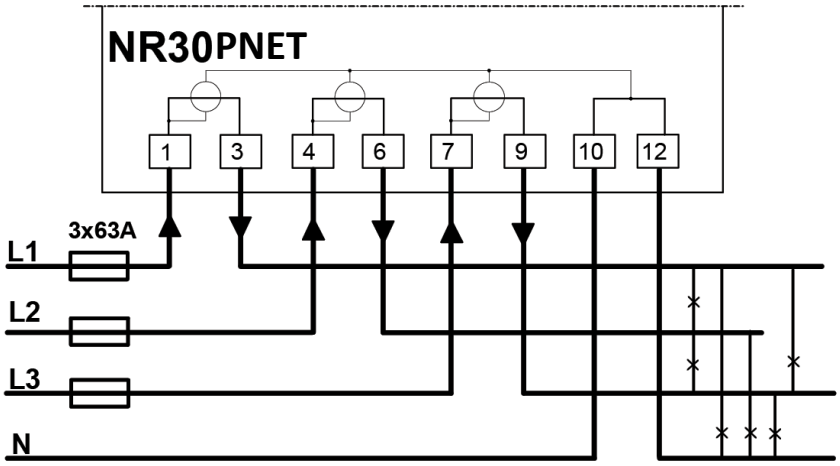

Fig.4. Direct measurement in 4-wire network version 63 A

Direct measurement in 4-wire network

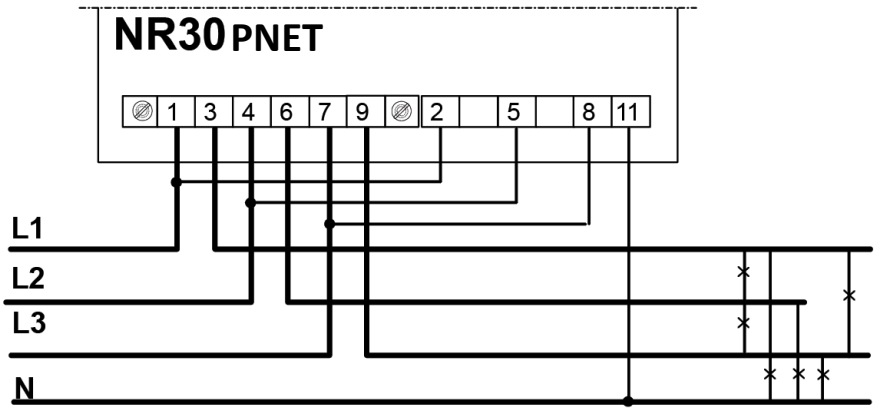

Semi-indirect measurement
in 4-wire network

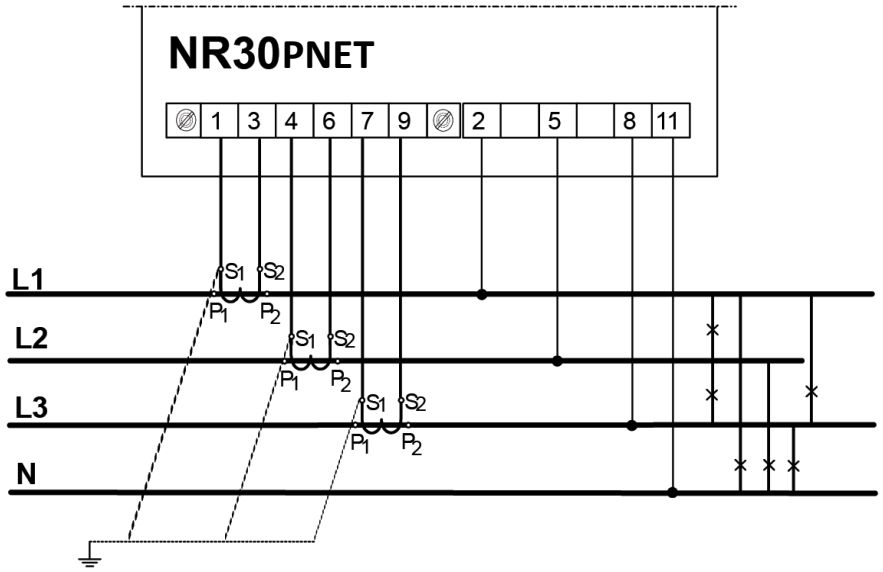

Indirect measurement
in 4-wire network

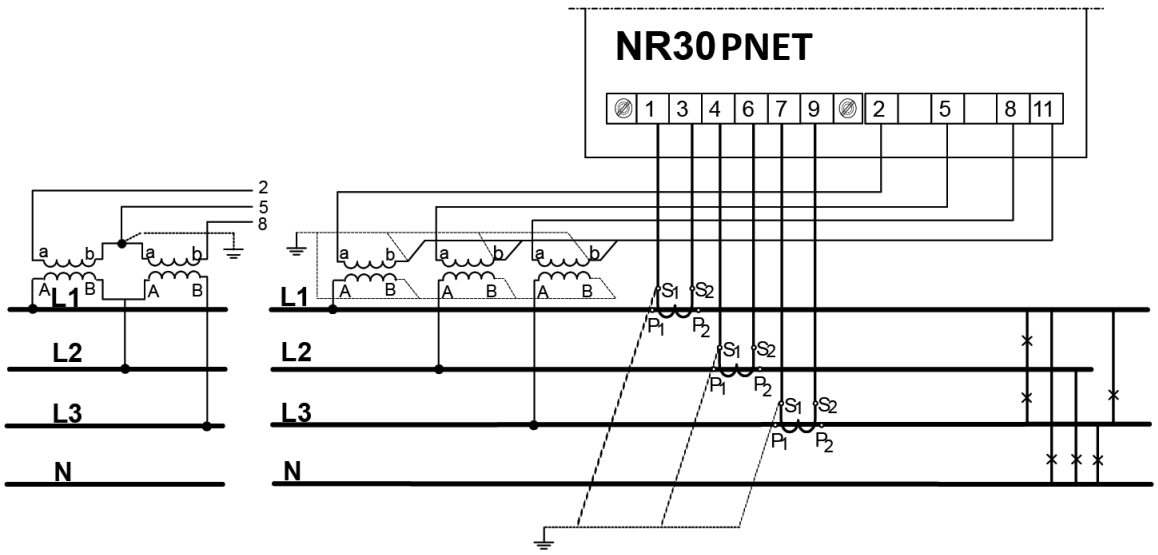

Semi-direct measurement using 2 current transformers in 3 - wire network.

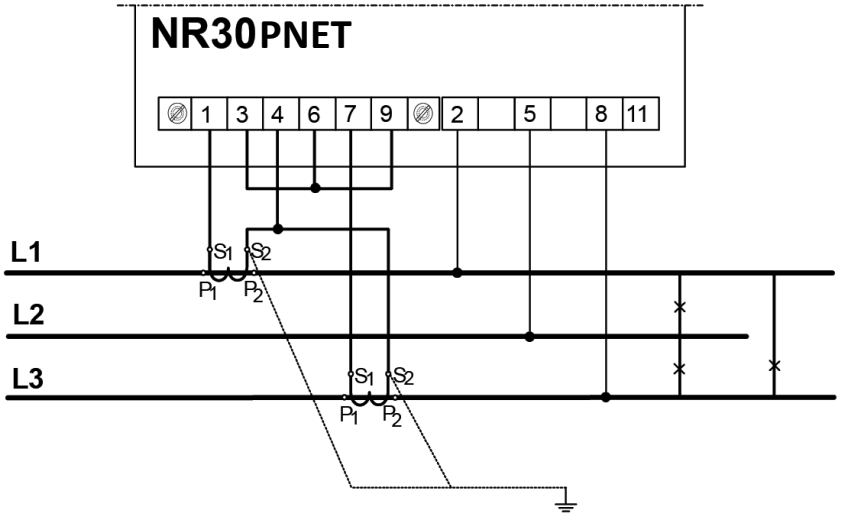

Fig.5. Input signal connection in 3-phase 4 - wire network

Direct measurement in 3 - wire network

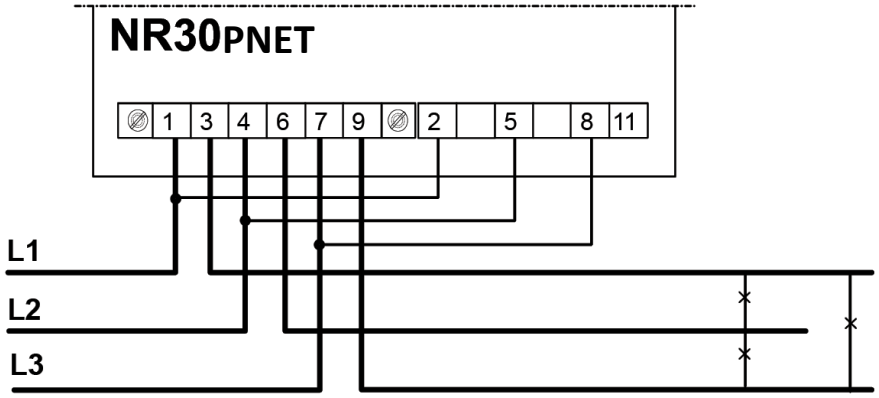

Indirect measurement using 2 current transformers and 2 or 3 voltage transformers in 3 - wire network.

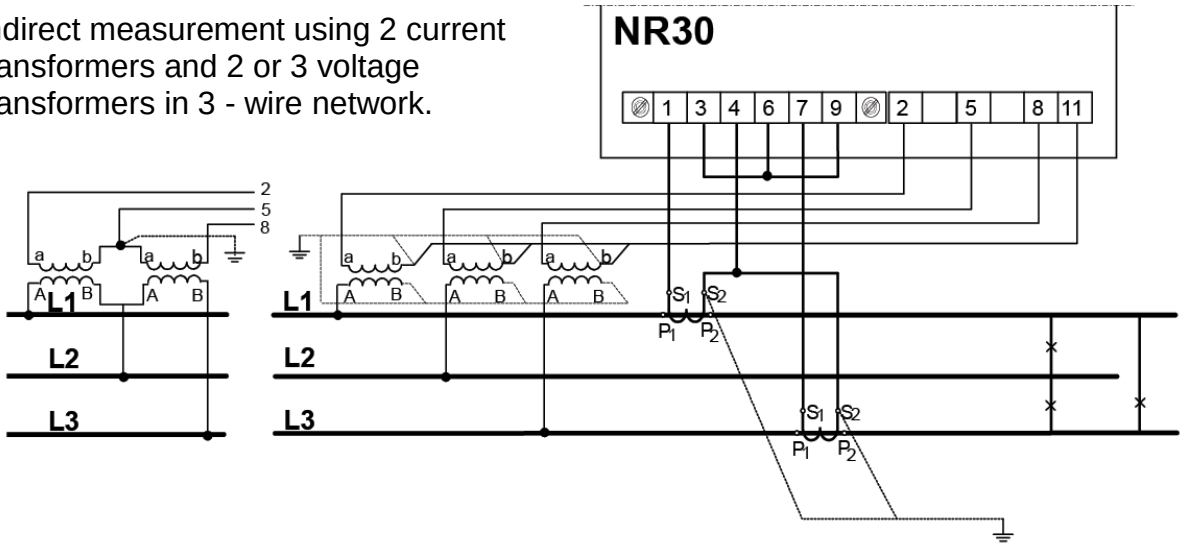

Fig.6. Input signal connection in 3-phase 3 - wire network

6 COOPERATION WITH S4AO

For NR30PNET versions with the S4AO block of 4 analog outputs, side connector for connecting blocks is included. The connector can also be ordered separately: order code 24-171-01-00016

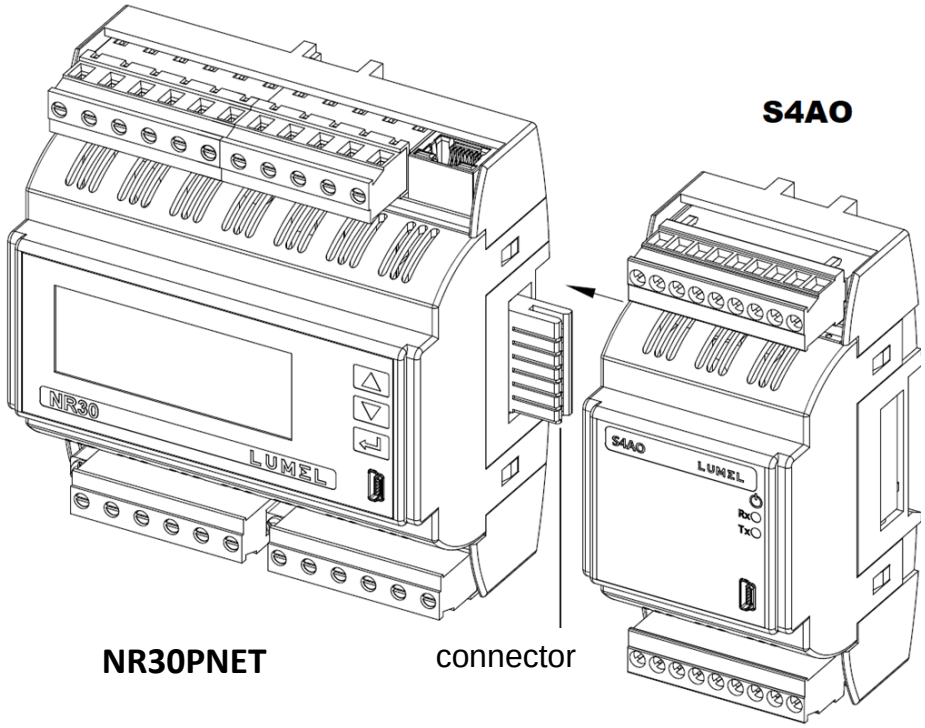

Fig.7. Connecting blocks using the side connector

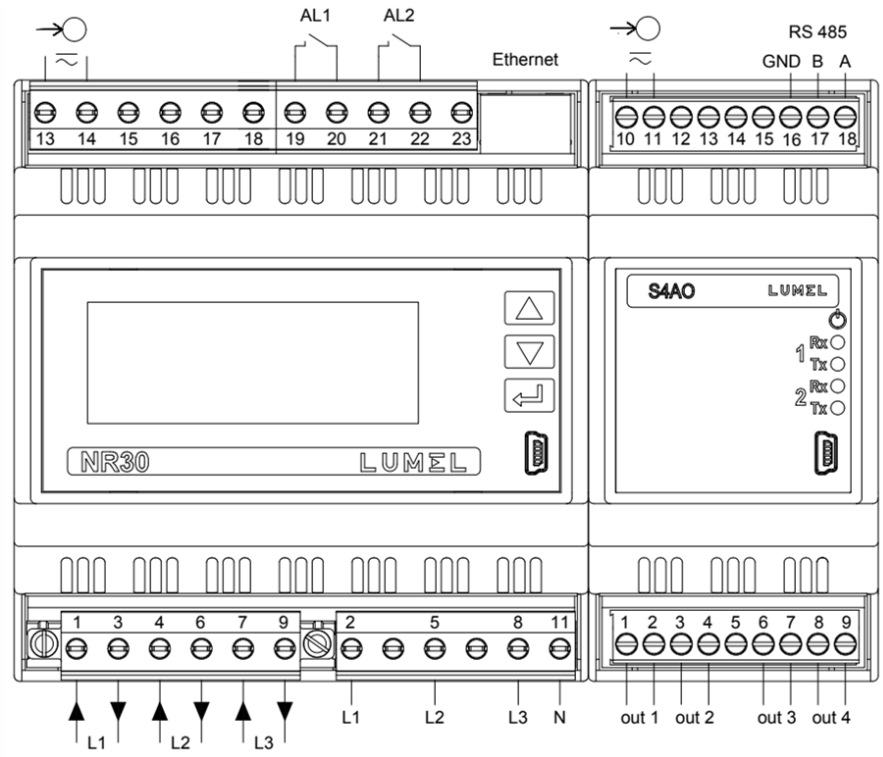

Fig.8. Connection of NR30PNET with S4AO using RS485 interface

The S4AO module communicates with the NR30PNET meter via the RS485 Modbus Master interface, therefore cooperation with S4AO excludes the use the NR30PNET meter RS485 interface for communication with another Master.

7 NR30PNET PROGRAMMING

7.1 Frontal panel



Fig.9. Frontal panel

NR30PNET meter has 3 buttons and a 20 x 4 LCD character display.
Description of the frontal panel:

▲	value increase key and moving up
▼	button to decrease the value and moving down
↵	accept key
	USB socket

V,A,W,var, VA, Wh, varh, Hz,	units of displayed quantities	k, M, G	kilo = 10^3, Mega = 10^6, Giga = 10^9
U1,I1, P1, ...EnQ	Indications of displayed parameters	L, C	markers of the type of load inductive, capacitive

The values of measured parameters are presented on active pages selected by subsequent pressing of the buttons ▲ (next page) or ▼ (previous page).

Page size is determined by any 3 quantities selected from Table 1 and displayed on the screen. Defining pages is described under **Displaying** mode.

The information bar at the top of the screen shows the status of the alarm outputs, alarm conditions. There is also an Ethernet connection symbol on the information bar, indicators of receiving and transmitting data to the RS485 line. In the case of reverse phase sequence, the symbol "!" flashes. When displaying the minimum, maximum or harmonic values, the corresponding information appears.

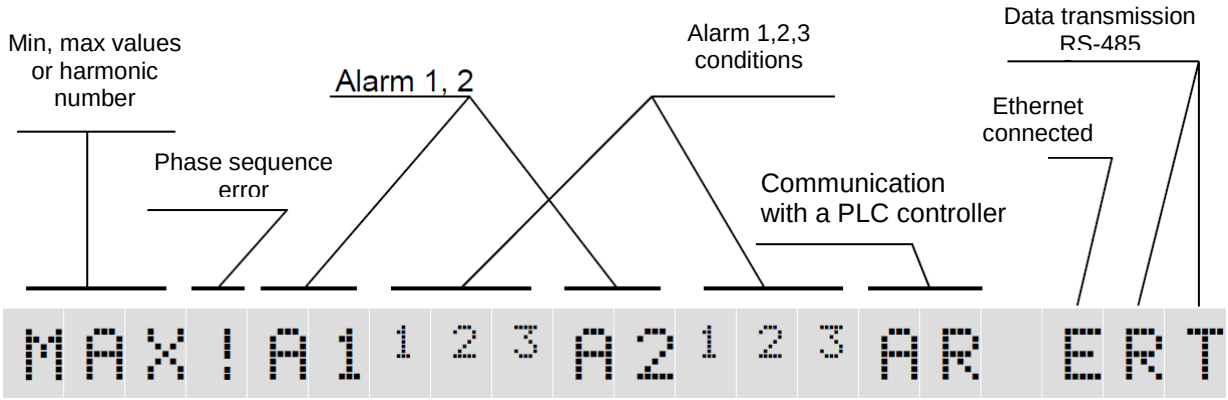

Fig.10. Information bar

Symbol	Information
MIN MAX	Pressing the button displays the minimum, maximum or current value (no symbol) of the displayed quantity.
!	If voltage signals are connected in reverse sequence, the symbol indicating the phase sequence error flashes.
A1, A2	Status of alarm outputs. In the event of an alarm (s), the corresponding symbols are displayed.
1 2 3	Signaling of meeting the alarm conditions
AR	Communication with a PLC controller
E	Ethernet connection symbol
R T	Indicator of receiving and transmitting data to the RS485 line

7.2 Messages after Switching the Supply on

7.3 Starting operation

When power is turned on, the meter displays the logo, NR30PNET meter name, version, current firmware version and MAC address and then switches to measurement mode displaying the page which was set as the last one. Displayed information:

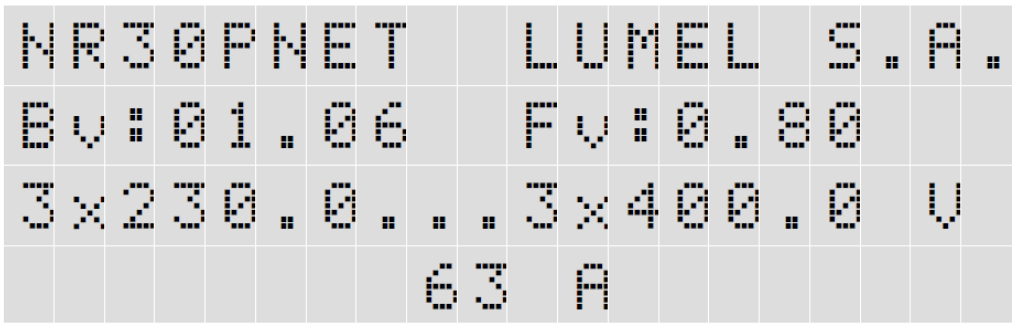

Fig.11. Welcome screen

NR30PNET – meter type, brand

Bv:01.06 – bootloader version no., Fv:0.80 – firmware version no.

U: 3x230.0...3x400.0 V – voltage versions

63 A – current versions

7.4 Language selection

The preset language is English. To select a different language, press and hold the button for about 10 seconds. The language selection menu will then appear. The language selection is made with the or buttons and then confirmed again by pressing the accept button.

8 OPERATING MODES

The NR30PNET meter has 8 operating modes:

Measurement – normal operation mode. The values of quantities are displayed according to pre-programmed pages or pages configured by the user in the Displaying mode.

Parameters – configuration of parameters of the meter,

Alarms – alarm configuration Alarm 1, Alarm 2,

Displaying – configuration of displayed pages,

Ethernet – configuration of Ethernet Profinet interface parameters,

Modbus – configuration of RS485 interface parameters,

Settings – settings: password, language, time, date,

Information – preview of program version, serial no., MAC address,

To enter from the **Measurement** mode into any mode, press and hold the button for about 3 seconds.

Use buttons to select the appropriate mode and accept with

Return to the measuring mode is done by pressing at the same time

Parametrs	Connection wire 3Ph-4W 3Ph-3W 1Ph-2W	Current range 1 A 5 A	Voltage L - N 057.7	Voltage L - L 100.0	VT primary 0000100	VT secondary 00100.0	CT primary 00005	CT secondary 00005	Demand integ. time 15 min 30 min 60 min	AVG synchronization none with RTC
	Volt. Connector 2 U1 U2 U3	Volt. connector 5 U1 U2 U3	Volt. Connector 8 U1 U2 U3	Curr connector 1-3 I1 -I1 I2 -I2 I3 -I3	Curr connector 4-6 I1 -I1 I2 -I2 I3 -I3	Curr connector 7-9 I1 -I1 I2 -I2 I3 -I3	Del energy counters No active reactive apparent all	Del demand values No Yes	Set defaults No Yes	
Alarms **Alarm 1** **Alarm 2**	**Settings**	Logical conditions C1 C1 v C2 v C3 C1 ^ C2 ^ C3 (C1 ^ C2) v C3 (C1 v C2) ^ C3	RLY state if AL on. off. on	Holdback alarm off off on	Disp. alarm event off on.	Set AL defaults No Yes				
	Condition C1 **Condition C2** **Condition C3**	Values U1 I1 P1 Q1 : gg:mm	Condition type n_on noFF on oFF H_on : 3_oF	Lo limit condition[%] +0099.0	Hi limit condition [%] +0101.0	Delay condition on [s] 0000	Delay condition off [s] 0000	Hldbk cond. off->on [s] 0000	Display cond. event off On	

Fig.12a. Programming matrix

Displaying	**Settings**	Backlight off on	Backlight off time [s] 0000	Pages cfg 22 / 23 Page 1 Page 2 Page 3 : Page 23	Set page defaults No Yes
	Page 1 : **Page 22**	...\Page 1 Display field 1 Display field 2 Display field. 3	...\Display field 1 Off U1 I1 P1 : En S		
		...\Page 23 H03 U1 % I1 % U2 % I2 % U3 % I3 %			

Fig.12b. Programming matrix

Ethernet/ Profinet	**Addresses**	IP address 000.000.000.000	Subnet mask 000.000.000.000	Gateway address 000.000.000.000	MAC address aa.bb.cc.00:21:01
	Reset	Reset ◆ No ◇ Yes			

Fig.12c. Programming matrix

Modbus	Address 001	Baudrate ◇ 4800 b/s ◆ 9600 b/s ◇ 19,2 kb/s ◇ 38,4 kb/s ◇ 57,6 kb/s ◇ 115,2 kb/s	Mode ◆ RTU8N2 ◇ RTU8N1 ◇ RTU8O1 ◇ RTU8N1	Set Defaults 42xx ◆ No ◇ Yes					
Settings	Password ****	Language ◇ English ◆ Polski ◇ Deutsch	Time 13.47	Date 15/09/2019	Set defaults ◆ No ◇ Yes				
Information	Type NR30PNET	Order code 11200	Boot Version 1.06	Program Version 0.85	Serial number 18040001	MAC address aa.bb.cc.00:21:01	Name (empty)	IP address 000.000.000.000	Subnet mask 255.255.255.000	Gateway address 000.000.000.000

Fig.12d. Programming matrix

8.1 Measurement mode

In the **Measurement** mode, the values of quantities are displayed acc. to the pre-programmed or user-configured pages in the **Displaying** mode.

The change of the page is done by pressing ▲ (next page) or ▼ button (previous page). Pressing the ↵ button displays the minimum, maximum or current value (no symbol) of the displayed quantity. Resetting minimum values is done by brief pressing the ↵ button, and then ▼; resetting maximum values by pressing respectively ↵ and ▲.

When displaying inductive or capacitive reactive power or energy, a marker is displayed that indicates the nature of the load ”L” at inductive load or “C” at capacitive load.
When displaying active energy, the "+" sign displays active energy import or "-" active energy export.
Exceeding the upper or lower indication range is indicated on the display by ^^^^ or vvvv. When measuring averaged values (P DMD, S DMD, I DMD) single measurements are done with a 0.25 second quantum. Averaging time can be chosen: 15, 30 or 60 minutes. Until the time all averaged samples are obtained, the values are calculated from already measured samples.
The current in the neutral wire IN is calculated from phase current vectors.

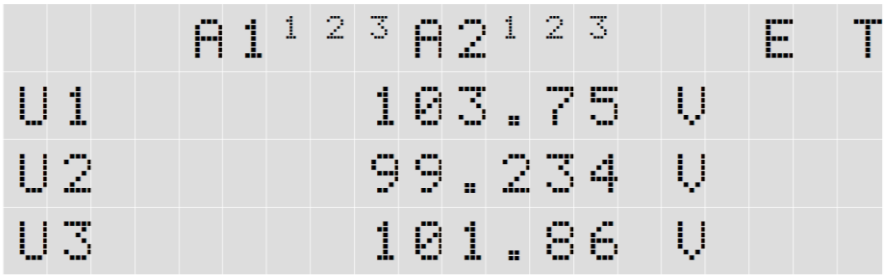

Fig.13. Screen of the measuring mode of the meter

8.1.1 Measurement of voltage and current harmonics

The choice of harmonics is made by selecting page 23 dedicated to displaying harmonic values of voltages U1, U2, U3 and currents I1, I2, I3 simultaneously for 3-phases. The number of the displayed harmonic can be changed in the range 2..51 after pressing the button ↵ and then ▲ or ▼.

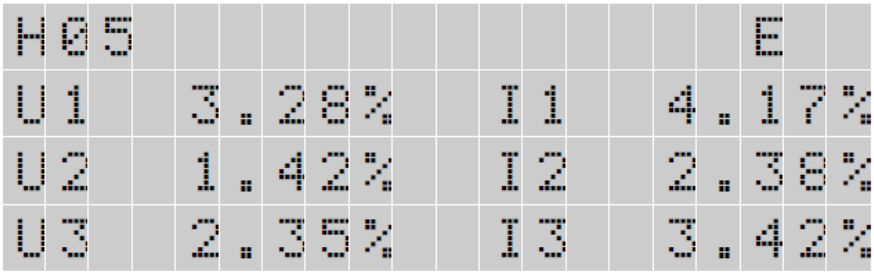

Fig.14 Screen 23 - visualization of harmonics

8.2 Parameters mode

This mode is used to set the meter parameters. To enter the Parameters mode, press the button



Fig.15. Screen for selecting Parameters mode

for approx. 3 seconds, and then press the or select the Parameters mode and accept with the button . Access to configuration of parameters is protected by password, if it has been introduced and is different from zero. When the password is 0000, the password prompt is bypassed. If the password is incorrect, the message "Incorrect password" is displayed. Read-only menu." is displayed. Then you can view the parameters, but the changes are blocked.

When the password is valid or not entered, we can set values according to Table 1.

Using we select a parameter and confirm using the button . Then using we select the parameter feature or the desired parameter values are set. The active position is indicated by the cursor .The selected characteristic or value of the parameter should be confirmed by pressing the button or canceled by simultaneous pressing . To exit the Parameter procedure, press the button or wait for about 120 seconds. Exit the Parameters selection menu after pressing the button again or, after waiting for about 120 seconds.

Table 1

No.	Parameter name	Characteristic / value	Description	Default value
1	Connection wire	3Ph-4W 3Ph-3W 1Ph-2W	Network type 3 phase 4 wire 3 phase 3 wire 1 phase 2 wire	3Ph-4W
2	Current range	1A, 5A	Input range:1A or 5A	5A
3	Voltage L-N	57.7 .. 100.0 V; or 230.0 .. 400.0 V;	Phase input voltage	57.7 V or 230.0 V
4	Voltage L-L	100.0 .. 170.0 V; or 400.0 .. 690.0 V;	Phase-to-phase input voltage	100.0 or 400.0
5	VT primary	1 .. 1245183 V	Primary voltage of transformer	100
6	VT secondary	0.1 .. 01000.0	Secondary voltage of transformer	100.0
7	CT primary	1…20000	Primary current of transformer	5
8	CT secondary	1...1000	Secondary current of transformer	5
9	Demand integ. time	15 min, 30 min, 60 min	Averaging time of active power P DMD, of apparent power S DMD, of current I Demand	15 min
10	AVG synchronization	none, with RTC	Averaging synchronized with real time clock	none
11	Volt. Connector 2	U1, U2, U3		U1
12	Volt. Connector 5	U1, U2, U3		U2
13	Volt. Connector 8	U1, U2, U3		U3
14	Curr connector 1-3	I1,-I1,I2,-I2,I3,-I3		I1
15	Curr connector 4-6	I1,-I1,I2,-I2,I3,-I3		I2
16	Curr connector 7-9	I1,-I1,I2,-I2,I3,-I3		I3
17	Del energy counters	No, active, reactive,	Resetting watt-hour meters	No

		apparent, all		
18	Del demand values	No, Yes	Resetting averaged values	No
19	Set defaults param	No, Yes	Default settings of parameters	No

•During a parameter change, it is checked whether the value is within the range. In the case of setting the value out of range, the value is set to the maximum value (when the value is too high) or to the minimum value (when the value is too low).

•When changing the parameter "Voltage L - N", the parameter "Voltage L - L" is automatically converted (x √3), when changing the parameter "Voltage L - L", the parameter "Voltage L - N" is automatically converted (x √3),

For the configuration of NR30PNET meters you can also use our free eCon software available at www.lumel.com.pl**.**

8.3 Alarm mode

Select the **Alarms** mode in options and approve the choice by pressing .

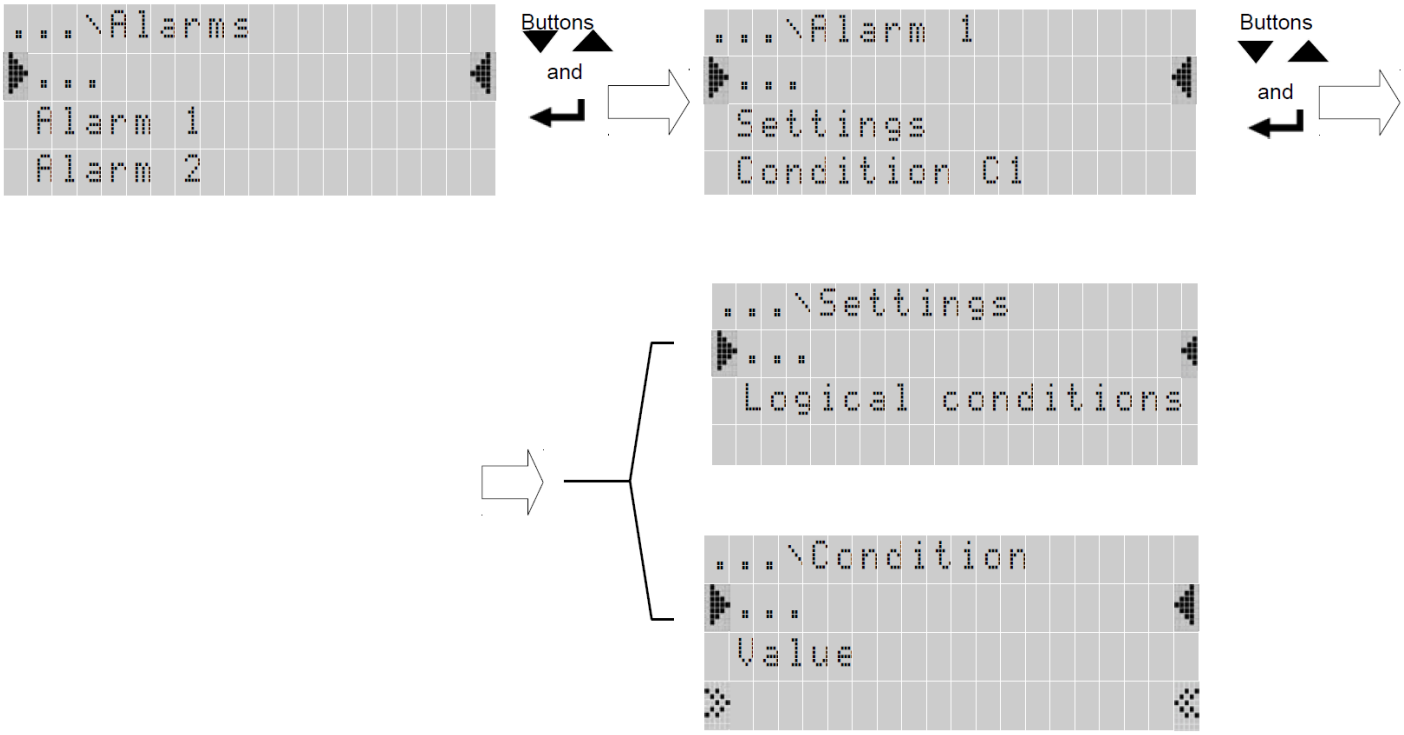

Fig.16. Alarm mode screens

Table 2

No.		Parameter name	range	Notes / description	Default value
1	Settings	Logical conditions	C1 C1 v C2 v C3 C1 ∧ C2 ∧ C3 (C1 ∧ C2) v C3 (C1 v C2) ∧ C3		C1
2		RLY state if AL on	on/off	State of relay with activated alarm Deactivated/Activated	on
3		Holdback alarm off	on/off	Lock of alarm deactivation	off
4		Disp. alarm event	on/off	When the function of alarm signaling is switched on, then after the state of emergency the alarm symbol is not blanked, but it begins to flash. The signaling lasts until pressing the buttons ▲ ▼ The function only applies to the alarm signaling, thus relay contacts will act without maintaining, according to the selected type of alarm.	off
5		Set AL defaults	No / Yes	Default settings of parameters	No
6	Condition C1 / Condition C2	Values	U1,I1,P1,Q1,…,gg:mm	Value at the alarm output, parameter acc. to table 3	U1
7		Condition type	n_on, noFF, on,oFF, H_on, HoFF, 3non, 3noF, 3_on, 3_oF	acc. to Fig. 17	n-on
8		Lo limit condition	-144.0…144.0	Lower value of condition in % of the nominal value of input quantity acc. to table 3	99.0
9		Hi limit condition	-144.0…144.0	Upper value of condition in % of the nominal value of input quantity acc. to table 3	101.0
10		Delay condition on	0 … 3600	Delay of condition act. in seconds	0
11		Delay condition off	0 … 3600	Delay of condition deactivation in seconds	0
12		Hldbk cond. off->on	0 … 3600	Locking the condition reactivation in seconds	0
13	Condition C2	Display cond. event	On/off	Signaling of condition occurrence When the function of maintaining is switched on, after the state of condition is finished, the condition symbol is not blanked, but it begins to flash. The signaling lasts until pressing the buttons ▲ ▼	off

When the entered ”Upper condition value ” is lower than the ”Lower condition value ”, the condition is disabled.

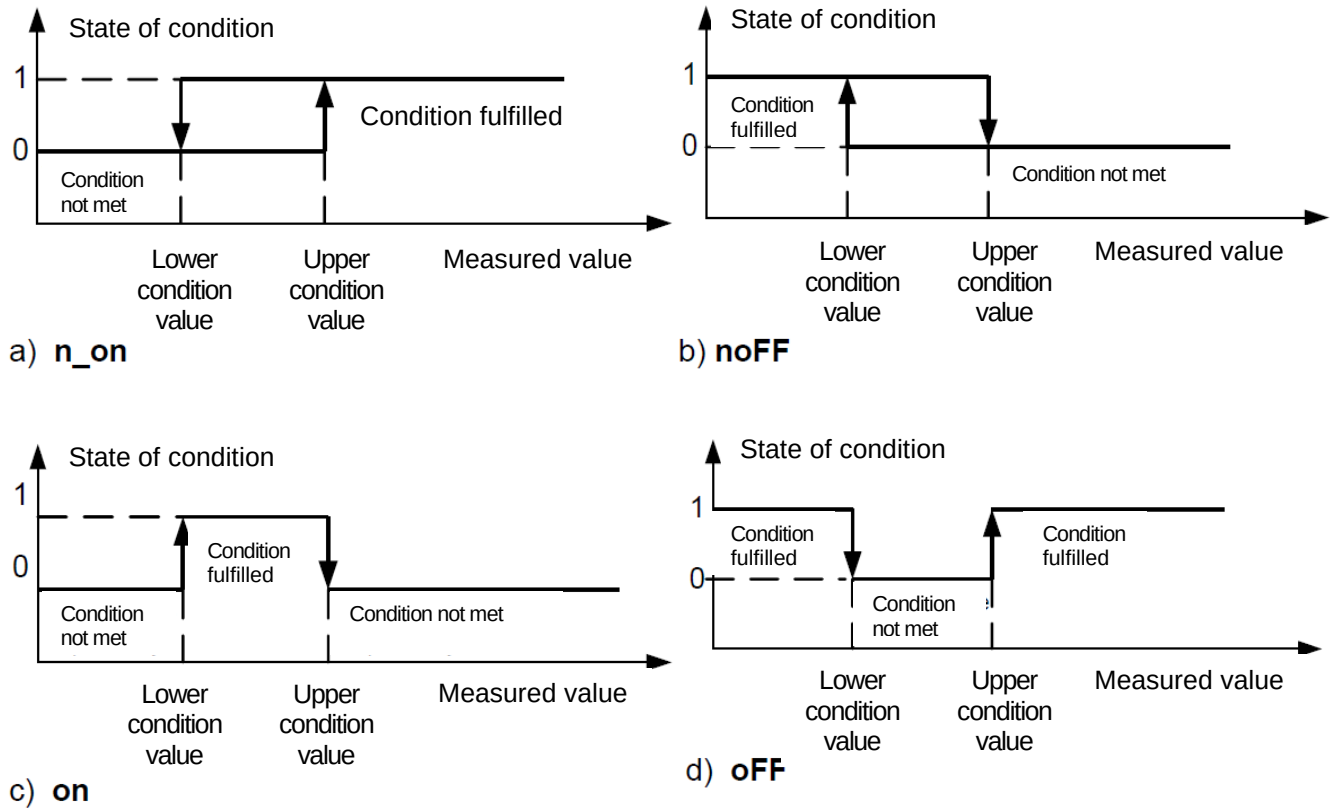

Fig.17. Types of conditions: a) n_on b) noFF c) on d) OFF

Other types of conditions:

- **H_on** – always met;
- **HoFF** – always not met,
- **3non** – when the value of the measured quantity exceeds the "Upper value of condition" at any phase - the condition will be met. The condition is disabled when the value of the measured value at all phases is less than the "Lower value of the condition."
- **3noF** – when the value of the measured quantity is lower than the "Lower value of condition" at any phase - the condition will be met. The condition is disabled when the value of the measured value at all phases is higher than the "Upper value of the condition."
- **3_on** – when the value of the measured quantity at any phase will be between the "Lower value of condition," and "Upper value of condition" - the condition is met. The condition will be disabled if the value of the measured quantity is below the "Lower value of condition" or above the "Upper value of the condition" at all phases.
- **3_oF** – when the value of the measured quantity will be below the "Lower value of condition" or above the "Upper value of condition" at any phase - the condition is met. The condition will be disabled if the value of the measured quantity is between the "Lower value of condition" and the "Upper value of the condition" at all phases.
- In the 3rd series of alarms the alarm value must come from the following ranges: 01-09, 10-18 and 19-27 (acc. to table 7). They work with the same Hysteresis thresholds of the "Lower values of condition" and "Upper value of condition" for each phase. The blanking of alarm signaling occurs after simultaneous pressing of the buttons .

Table 3

Value in register	Dispalyed parameter	Parameter	Percentage value corresponding to 100% of the nominal range.
01	U1	Voltage of phase L1	Un [V] *
02	I1	Current in the L1 phase conductor	In [A] *
03	P1	Active power of phase L1	Un x In x cos(0°) [W] *
04	Q1	Reactive power of phaseL1	Un x In x sin(90°) [Var] *
05	S1	Apparent power of phase L1	Un x In [VA] *
06	PF1	Power factor PF of phas L1	1
07	tg1	tgφ factor of phase L1	1
08	THD U1	THD of voltage in phase L1**	100.00 [%]
09	THD I1	THD of current in phase L1	100.00 [%]
10	U2	voltage of phase L2	Un [V] *
11	I2	current in the L2 phase conductor	In [A] *
12	P2	Active power of phase L2	Un x In x cos(0°) [W] *
13	Q2	Reactive power of phase L2	Un x In x sin(90°) [Var] *
14	S2	Apparent power of phase L2	Un x In [VA] *
15	PF2	Power factor PF of phase L2	1
16	tg2	tgφ factor of phase L2	1
17	THD U2	THD of voltage in phase L2**	100.00 [%]
18	THD I2	THD of current in phase L2	100.00 [%]
19	U3	voltage of phase L3	Un [V] *
20	I3	current in the L3 phase conductor	In [A] *
21	P3	Active power of phase L3	Un x In x cos(0°) [W] *
22	Q3	Reactive power of phase L3	Un x In x sin(90°) [Var] *
23	S3	Apparent power of phase L3	Un x In [VA] *
24	PF3	Power factor PF of phase L3	1
25	tg3	tgφ factor of phase L3	1
26	THD U3	THD of voltage in phase L3**	100.00 [%]
27	THD I3	THD of current in phase L3	100.00 [%]
28	U avg	Mean phase voltage	0.00 [%]
29	I avg	Mean 3-phase current	In [A] *
30	ΣP	3-phase active power (P1+P2+P3)	3 x Un x In x cos(0°) [W] *
31	ΣQ	3-phase reactive power (Q1+Q2+Q3)	3 x Un x In x sin(90°) [Var] *

32	ΣS	3-phase apparent power (S1+S2+S3)	3x Un x In [VA] *
33	PF avg	Factor of 3-phase active power PF	1
34	tg avg	3-phase tgφ factor	1
35	THD U	3-phase THD of voltage**	100,00 [%]
36	THD I	3-phase THD of current	100,00 [%]
37	f	frequency	100 [Hz]
38	U12	Phase-to-phase voltage L1-L2	$\sqrt{3}$ Un [V] *
39	U23	Phase-to-phase voltage L2-L3	$\sqrt{3}$ Un [V] *
40	U31	Phase-to-phase voltage L3-L1	$\sqrt{3}$ Un [V] *
41	U123	Mean phase-to-phase voltage	$\sqrt{3}$ Un [V] *
42	P DMD	Mean active power (P Demand)*	3 x Un x In x cos(0°) [W] *
43	S DMD	Mean apparent power (S Demand)*	3 x Un x In [VA] *
44	I DMD	Mean current (I Demand) *	In [A] *
45	I(N)	Current in neutral conductor	In [A] *
46	T1/ B1	Temperature T1 of input 1 / State of binary input B1	400 [°C] / 1
47	T2/ B2	Temperature T2 of input 2/ State of binary input B2	400 [°C] / 1
48	En P+	Imported 3-phase active energy	100000 [kWh]
49	En P-	Exported 3-phase active energy	100000 [kWh]
50	En Q	Inductive 3-phase active energy	100000 [kvarh]
51	En Q	Capacitive 3-phase apparent energy	100000 [kvarh]
52	En S	3-phase apparent energy	100000 [kVAh]
53	Phase order	Phase order	L1,L2,L3 - 0,00 [%] L1,L3,L2 - 100,00 [%]
54	hh:mm	time, hhx100+mm	2400 - 100 [%]

*Un - rated values of nominal voltages see “Voltage L-N” in table 1

* In - rated values of nominal currents

**In a three-phase 3-wire system (3Ph / 3W) THD U12, THD U23, THD U31, THD U123 respectively

8.4 Display mode

In this mode, we configure the pages displayed in the normal operation mode of the meter Measurement.

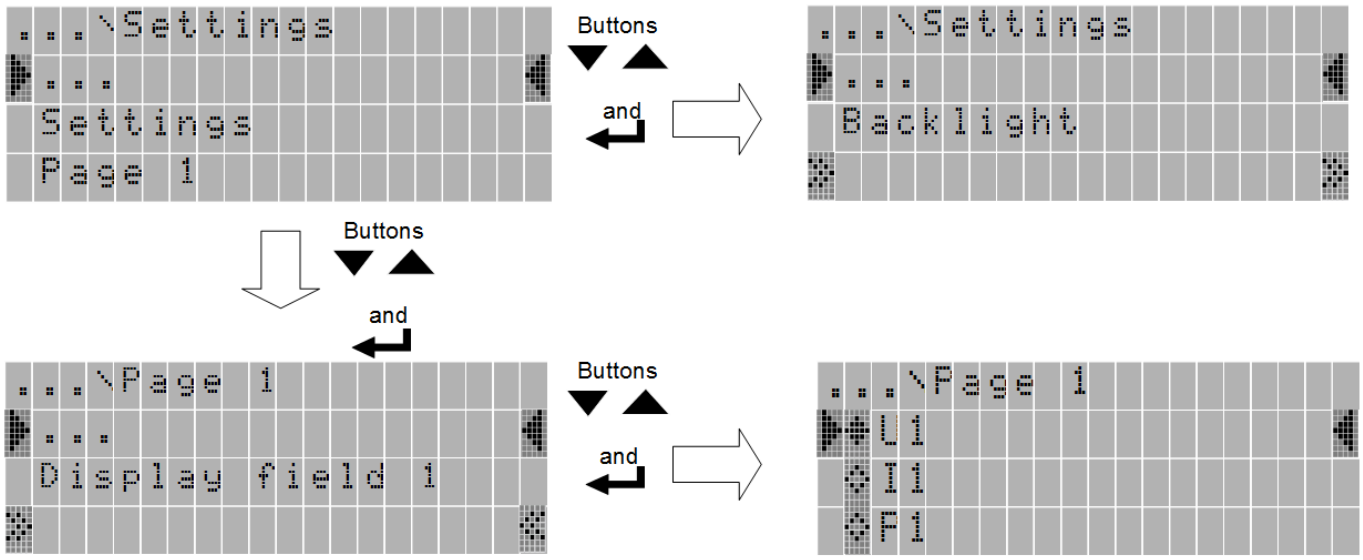

Fig.18. Ethernet mode screens

Table 4

No.		Parameter name	range	Notes / description	Default value
1	Settings	Backlight	On, off	Display backlit Off- Disabled On- Enabled	on
2		Backlight off time	0 .. 9999	Backlight shutdown time in seconds	0
3		Pages cfg	23 / 23 Page 1 Page 2 : Page 11 Page 23*	Selection of pages visualized in Measurement mode.	Page 1 Page 2 : Page 11 Page 23
4		Set page defaults	No Yes	Default settings of pages	No
5	Page 1 : : Page 22	Display field 1 Display field 2 Display field 3	Off U1 I1 P1 Q1 : En S	Selection of quantities displayed on a chosen page and field in accordance with table 5.	Table 6a or 6b or 6c depending on connections layout

*Page 23 is dedicated to displaying the harmonics values of voltages U1, U2, U3 and currents I1, I2, I3 and it is not possible to change the quantity in the selected field. The page can be turned off from the preview: “Settings ->Page Selection” .

Selection of the displayed quantities:

Table 5

No.	Quantity name	Designation	Unit	Signaling	3Ph / 4W	3Ph / 3W	1Ph / 2W
00	no quantity - display field is blank	Off			√	√	√
01	voltage of L1 phase	U1	(M,k)V		√	x	√
02	current in phase wire L1	I1	(k)A		√	√	√
03	active power of L1 phase	P1	(G,M,k)W		√	x	√
04	reactive power of L1 phase	Q1	(G,M,k)var	L/ C	√	x	√
05	apparent power of L1 phase	S1	(G,M,k)VA		√	x	√
06	active power factor of L1 phase (PF1=P1/S1)	PF1			√	x	√
07	tgφ factor of L1 phase (tg1=Q1/P1)	tg1			√	x	√
08	THD of L1* phase voltage	THD U1	%		√	√	√
09	THD of L1 phase current	THD I1	%		√	√	√
10	voltage of L2 phase	U2	(M,k)V		√	x	x
11	current in phase wire L2	I2	(k)A		√	√	x
12	active power of L2 phase	P2	(G,M,k)W		√	x	x
13	reactive power of L2 phase	Q2	(G,M,k)var	L/C	√	x	x
14	apparent power of L2 phase	S2	(G,M,k)VA		√	x	x
15	active power factor of L2 phase (PF2=P2/S2)	PF2	PF		√	x	x
16	tgφ factor of L2 phas (tg2=Q2/P2)	tg2			√	x	x
17	THD of L2* phase voltage	THD U2	%		√	√	x
18	THD of L2 phase current	THD I2	%		√	√	x
19	voltage of L3 phase	U3	(M,k)V		√	x	x
20	current in phase wire L3	I3	(k)A		√	√	x
21	active power of L3 phase	P3	(G,M,k)W		√	x	x
22	reactive power of L3 phase	Q3	(G,M,k)var	L/C	√	x	x
23	apparent power of L3 phase	S3	(G,M,k)VA		√	x	x
24	active power factor of L3 phase (PF3=P3/S3)	PF3			√	x	x
25	tgφ factor of L3 phase (tg3=Q3/P3)	tg3			√	x	x
26	THD of L3* phase voltage	THD U3	V%		√	√	x
27	THD of L3 phase current	THD I3	A%		√	√	x
28	average phase voltage	U avg	(M,k)V		√	x	x
29	average three-phase current	I avg	(k)A		√	√	x
30	three-phase active power	ΣP	(G,M,k)W	+/-	√	√	√
31	three-phase reactive power	ΣQ	(G,M,k)var	L/C	√	√	√
32	three-phase apparent power	ΣS	(G,M,k)VA		√	√	√
33	active power factor 3-phase (PF=P/S)	PF avg			√	√	x
34	tgφ factor 3-phase average (tg=Q/P)	tg avg			√	√	x
35	THDU 3-phase average*	THD U	%		√	√	x
36	THDI 3-phase average	THD I	%		√	√	x
37	Frequency	f	Hz		√	√	√
38	phase-to-phase voltage L1-L2	U12	(M,k)V		√	√	x

39	phase-to-phase voltage L2-L3	U23	(M,k)V		√	√	x
40	phase-to-phase voltage L3-L1	U31	(M,k)V		√	√	x
41	phase-to-phase average voltage	U123	(M,k)V		√	√	x
42	averaged active power (P Demand)	P DMD	(G,M,k)W		√	√	√
43	averaged apparent power (S Demand)	S DMD	(G,M,k)VA		√	√	√
44	averaged current (I Demand)	I DMD	(k)A		√	√	√
45	current in neutral wire	I(N)	(k)A		√	x	x
46	3-phase imported active energy	En P+	kWh		√	√	√
47	3-phase exported active energy	En P-	kWh		√	√	√
48	3-phase reactive inductive energy	En Q ind	kvarh		√	√	√
49	3-phase reactive capacitive energy	En Q cap	kvarh		√	√	√
50	3-phase apparent energy	En S	kVAh		√	√	√

* In 3-phase 3-wire system (3Ph/3W) respectively THD U12, THD U23, THD U31,THD U123

Default settings of the displayed pages in 3-phase 4-wire system Table 6a

P1	**P2**	**P3**	**P4**	**P5**	**P6**	**P7**	**P8**	**P9**	**P10**
U1 V	U12 V	I1 A	P1 W	Q1 var	PF1	tg1	ΣP W	U avg V	PF avg
U2 V	U23 V	I2 A	P2 W	Q2 var	PF2	tg2	ΣQ var	I avg A	tg avg
U3 V	U31 V	I3 A	P3 W	Q3 var	PF3	tg3	ΣS VA	I(N) A	f Hz
P11	**P12**	**P13**	**P14**	**P15**	**P16**	**P17**	**P18**	**P19**	**P20**
U1 V	Q1 var	U2 V	Q2 var	U3 V	Q3 var	P DMD W	ΣP W	ΣQ var	ΣS VA
I1 A	S1 VA	I2 A	S2 VA	I3 A	S3 VA	S DMD W	+En P kWh	EnQ L kvarh	En S kVAh
P1 W	PF1	P2 W	PF2	P3 W	PF3	I DMD A	-En P kWh	EnQ C kvarh	f Hz

P21	**P22**	**P23 (harm.2..51)**
THD U1 %	THD I1 %	U1 % I1 %
THD U2 %	THD I2 %	U2 % I2 %
THD U3 %	THD I3 %	U3 % I3 %

Page 23 is not configurable.

Default settings of the displayed pages in 3-phase 3-wire system Table 6b

P1	**P2**	**P3**	**P4**	**P5**	**P6**	**P7**	**P8**	**P9**	**P10**
U12 V	I1 A	U123 V	ΣP W	PF avg	P DMD W	ΣP W	ΣQ var	THD U12 %	THD I1 %
U23 V	I2 A	I avg A	ΣQ var	tg avg	S DMD W	En P+ kWh	En Q L kvarh	THD U23 %	THD I2 %
U31 V	I3 A	f Hz	ΣS VA	f Hz	I DMD A	En P- kWh	En Q C kvarh	THD U31 %	THD I3 %

Default settings of the displayed pages in 1-phase system Table 6c

P1	P2	P3	P4	P5	P6
U1 V	P1 W	PF1	P DMD W	P1 W	Q1 var
I1 A	Q1 var	tg1	S DMD W	En P+ kWh	En Q L kvarh
f Hz	S1 VA	f Hz	I DMD A	En P- kWh	En Q C kvarh

8.5 Ethernet/ Profinet mode

Select the **Ethernet** mode in options and approve the choice by the  push-button.

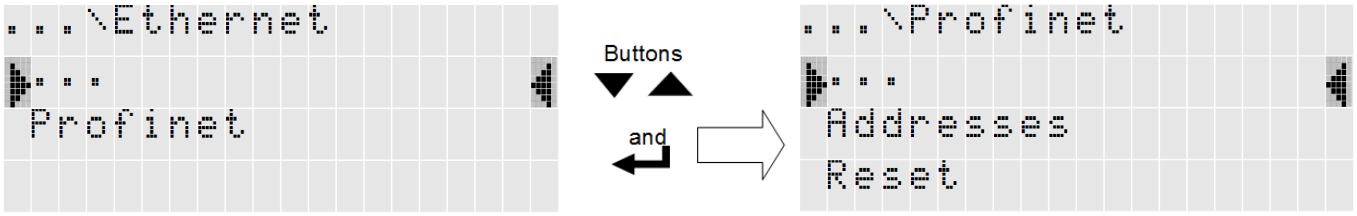

Fig.19. Ethernet mode screen

Table 7

No.		Parameter name	Range	Notes / description	Default value
1	Addresses	IP Address	0.0.0.0...255.255.255.255	10.0.1.161	-
2		Subnet mask	0.0.0.0...255.255.255.255	255.0.0.0	-
3		Default gate	0.0.0.0...255.255.255.255	10.10.10.203	-
4		MAC Address		Aa:Bb:Cc:21:01	-
5	Reset	Reset	No/Yes		No

8.6 Modbus mode

Select the **Modbus** mode in options and approve the choice by the  push-button.

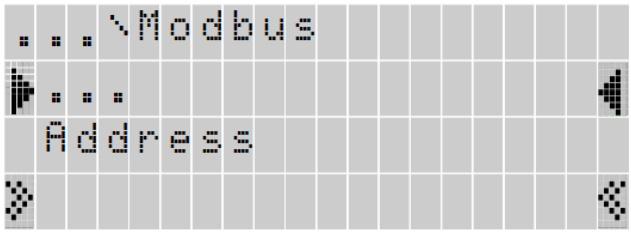

Fig.20. Modbus mode screen

Table 8

No.	Parameter name	Characteristic / value	Description	Default value
1	Address	1…247	Address on the Modbus network.	1
2	Baudrate	4800 b/s, 9600 b/s, 19,2 kb/s, 38,4 kb/s, 57,7 kb/s, 115,2 kb/s	Baud rate	9600 b/s
3	Mode	RTU 8N2, RTU 8N1, RTU 8O1, RTU 8N1	Transmission mode	RTU 8N2
4	Set defaults 42xx	No, Yes	Programmable read-only register group	No

8.7 Settings mode

Select the **Settings** mode in options and approve the choice by the  push-button.

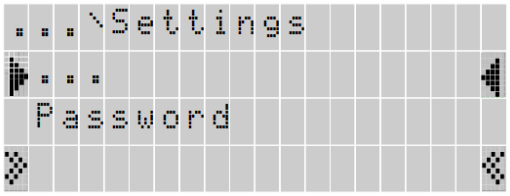

Fig.21. Settings mode screen

Table 9

No.	Parameter name	Characteristic / value	Description	Default value
1	Password	0 ... 9999	0 - off	0
2	Language	English, Polish, Deutsch		English
3	Time	hh:mm	hour:minute	00:00:00
4	Date	dd/mm/yyyy	Day/month/year	15.05.2018
5	Set all defaults	No, Yes		No

8.8 Information mode

Select the **Information** mode in options and approve the choice by the  push-button.

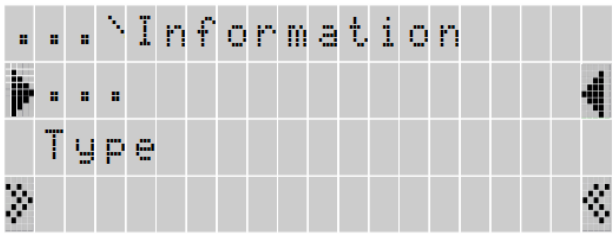

Fig.22. Information mode screen

Table 10

No.	Parameter name	Characteristic / value	Description	Default value
1	Type		Type of meter	NR30PNET
2	Order code		First 5 digits of ordering code	e.g.12200
3	Boot version		Loader version	e.g.1.06
4	Program Version		Version of the main meter program	e.g.0.85
5	Serial Number	ddmmxxxx	Current serial number of the meter day month current number	np.15070006
6	MAC Address	xx:xx:xx:xx:xx:xx	48-bit hardware address of the Ethernet interface written in hexadecimal	e.g.64:0E:0D:0C:0B:0A
7	Name	240 characters	Name: Profinet. First 18 characters are dispayed.	-
8	IP Address	0.0.0.0...255.255.255.255		-
9	Subnet mask	0.0.0.0...255.255.255.255		-
10	Gateway Address	0.0.0.0...255.255.255.255		-

9 SERIAL INTERFACES

9.1 RS485 INTERFACE – the list of parameters

The implemented protocol is in accordance with the PI-MBUS-300 Rev G of Modicon Company. The list of serial link parameters of NR30PNET meter:

- ID 0xE6
- meter address 1..247,
- baud rate 4.8, 9.6, 19.2, 38.4, 57.6, 115.2 kbit/s,
- operation mode Modbus RTU,
- information unit 8N2, 8E1, 8O1, 8N1,
- maximum time to commence the response 600 ms,
- maximum number of read registers in one query
  - 61 registers – 4 byte,
  - 122 registers – 2 byte,
- implemented functions -03, 04, 06, 16, 17,
  - 03, 04 registers reading,
  - 06 one register record
  - 16 n - registers record,
  - 17 device identification

Default settings: address 1, baud rate 9.6 kbit/s, RTU 8N2 mode.

9.2 Examples of registers reading and saving

Readout of n-registers (code 03h)

Example 1 . Readout of 2 16-bit registers of integer type, starting with the register addressed 0FA0h (4000) - registers values 10, 100.

Request:

Device address	Function	Register address		Number of registers		Checksum CRC
		B1	B0	B1	B0	
01	03	0F	A0	00	02	C7 3D

Response:

Device address	Function	Number of bytes	Value from the register 0FA0 (4000)		Value from register 0FA1 (4001)		Checksum CRC
			B1	B0	B1	B0	
01	03	04	00	0A	00	64	E4 6F

Example 2. Readout of 2 32-bit registers of float type as a combination of 2 16-bit registers starting with the register addressed 1B58h (7000) - registers values 10, 100.

Request:

Device address	Function	Register address		Number of registers		Checksum CRC
		B1	B0	B1	B0	
01	03	1B	58	00	04	C3 3E

Response:

Device address	Function	Number of bytes	Value from the register 1B58 (7000)		Value from the register 1B59 (7001)		Value from the register 1B5A (7002)		Value from the register 1B5B (7003)		Checksum CRC
			B3	B2	B1	B0	B3	B2	B1	B0	
01	03	08	41	20	00	00	42	C8	00	00	E4 6F

Example 3 . Readout of 2 32-bit registers of float type as a combination of 2 16-bit registers starting with the register addressed 1770h (6000) - registers values 10, 100.

Request:

Device address	Function	Register address		Number of registers		Checksum CRC
		B1	B0	B1	B0	
01	03	17	70	00	04	4066

Response:

Device address	Function	Number of bytes	Value from the register 1770h(6000)		Value from the register 1770h(6000)		Value from the register 1772h(6002)		Value from the register 1772h(6002)		Checksum CRC
			B1	B0	B3	B2	B1	B0	B3	B2	
01	03	08	00	00	41	20	00	00	42	C8	E4 6F

Example 4. Readout of 2 32-bit registers of float type, starting with the register addressed 1D4Ch(7500) - register values 10, 100.

Request:

Device address	Function	Register address		Number of registers		Checksum CRC
		B1	B0	B1	B0	
01	03	1D	4C	00	02	03 B0

Response:

Device address	Function	Number of bytes	Value from the register 1D4C (7500)				Value from register 1D4D (7501)				Checksum CRC
			B3	B2	B1	B0	B3	B2	B1	B0	
01	03	08	41	20	00	00	42	C8	00	00	E4 6F

Readout of single register (code 06h)

Example 5. Record of 543 (0x021F) value to register 4000 (0x0FA0)

Request:

Device address	Function	Register address		Register value		Checksum CRC
		B1	B0	B1	B0	
01	06	0F	A0	02	1F	CA 54

Response:

Device address	Function	Register address		Register value		Checksum CRC
		B1	B0	B1	B0	
01	06	0F	A0	02	1F	CA 54

Saving to n-registers (code 10h)

Example 6. Readout of 2 registers, starting with the register addressed 0FA3h (4003)

Recording values 20, 2000.

Request:

Device address	Function	Address of reg.Hi	Address of reg.Lo	No. of reg. Hi	No. of reg. Lo	Number of bytes	Value for reg. 0FA3 (4003)		Value for reg. 0FA4 (4004)		Checksum CRC
							B1	B0	B1	B0	
01	10	0F	A3	00	02	04	00	14	07	D0	BB 9A

Response:

Device address	Function	Register address		Number of registers		Checksum CRC
		B1	B0	B1	B0	
01	10	0F	A3	00	02	B2 FE

Report identifying the device (code 11h)

Example 7. Device identification

Request:

Device address	Function	Checksum
01	11	C0 2C

Response:

Address	Function	Number of bytes	ID	Device state	Information field for device software version (e.g. ”NR30PNET-0.85 - NR30PNET device with software version 0.85)		Checksum (CRC)
01	11	1D	EA	FF	NR30PNET-0.85		57 AB
					4E 52 33 30 50 4E 45 54 2D 30 2E 38 35	20 20 20 20 20 20 20 20 20 20 20 20 20	

9.3 Ethernet/ Profinet 10/100-BASE-T

NR30PNET meters are equipped with Fast Ethernet (100Mb/s) interface that allows for connection of the meter (using RJ45 socket) to Ethernet network. Profinet IO standard was used.

In the Profinet each device is identified by name, IP address, MAC address. NR30PNET meter allows you to set:

- name (NameOfStation),
- IP address.

The MAC address is set at the factory without the possibility of changes.

Standard Ethernet parameters of the meter are shown in table 7.

The meter is accompanied by GSDML (Generic Station Description) file containing the description of the properties of the device. The file is used in software used to configure devices in Profinet.

9.3.1 Connection of 10/100 BASE-T interface

To access the Ethernet services, it is required to connect the meter to the network via the RJ45 slot located at the rear/ inside the panel part of the meter, operating in accordance with Profinet protocol.

Description of RJ45 socket LEDs function:

- yellow LED - illuminates when the meter is properly connected to the Ethernet network
  100 Base-T, does not light up when the meter is not connected to the network or is connected to 10-Base-T network.

- green LED - Tx/Rx illuminates when the meter sends and receives data, flickers irregularly, when no data is transmitted the LED lights up permanently

To connect the meter to the network, use wire twisted pair of STP type (shielded) CAT 5 - for high-speed local area networks, frequency bandwidth up to 100 MHz according to the European standard EN 50173 with RJ-45 plug with core color (according to Table 11) in the following standard:

- EIA/TIA 568A for both connectors at the so-called simple connection of NR30PNET to the network hub or switch,
- EIA/TIA 568A for the first connector and EIA/TIA 568B for the second connector at the so-called patch cord connection (crossover) used, among others, when connecting NR30PNET to the computer.

Table 11

Conductor no.	Signal	Conductor color acc. to standard	
		EIA/TIA 568A	EIA/TIA 568B
1	TX+	white-green	white-orange
2	TX-	green	orange
3	RX+	white-orange	white-green
4	EPWR+	blue	blue
5	EPWR+	white-blue	white-blue
6	RX-	orange	green
7	EPWR-	white-brown	white-brown
8	EPWR-	brown	brown

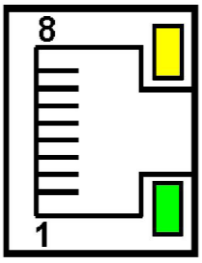

Fig.23 View and numbering of RJ45 slot pins

10 MAP OF REGISTERS OF NR30PNET METER

In NR30PNET meter the data is placed in 16- and 32-bit registers. Process variables and parameters of the meter are located in the address space of registers in a manner dependent on the type of the variable. Bits in 16-bit register are numbered from the youngest to the oldest (b0-b15). 32-bit registers contain floating point numbers in IEEE-754 standard. Byte order 3210 – the oldest is sent first.

Table 12

Address range	Value type	Description
4000 – 4159	Integer (16 bits)	Value placed in one 16-bit register. Registers for meter configuration. Description of registers can be found in table 16. Registers for recording and reading.
4200 – 4260	Integer (16 bits)	Value placed in one 16-bit register. Registers for configuration of programmable read-only register group Registers description can be found in table 15 Registers for recording and reading.
4300 - 4388	Integer (16 bits)	Value placed in one 16-bit register. Registers for configuration of displayed pages, Description of registers can be found in table 19. Registers for recording and reading.
4400- 4485	Integer (16 bits)	Value placed in single 16-bit register. Registers of statuses, energy values, the meter MAC address, configuration data. Description of registers can be found in table 20. Read-only registers.
4500- 4620	Integer (16 bits)	Value placed in single 16-bit register. Name of Profinet device. Description of registers can be found in table 21. Registers for recording and reading.

6000 – 6982	Float (2x16 bits)	Value placed in two successive 16-bit registers. Registers contain the same data as 32-bit registers of 7500 – 7953 range. Read-only registers. Byres order (1-0-3-2)
7000 - 7118	Float (2x16 bits)	Content of registers set in registers 4200 – 4359. Bytes order (3-2-1-0)
7200 – 7318	Float (2x16 bits)	Content of registers set in registers 4200 – 4359. Bytes order (1-0-3-2)
7400 - 7459	Float (32 bits)	Content of registers set in registers 4200 – 4359. Values placed in single 32-bit register.
7500 – 7991	Float (32 bits)	Values placed in single 32-bit register. Description of registers can be found in table 21. Read-only registers.
8000 - 8982	Float (2x16 bits)	Value placed in two successive 16-bit registers. Registers contain the same data as 32-bit registers of 7500 – 7953 range. Read-only registers. Byres order (3-2-1-0)

Table 13

Register address	Ope-rations	Range	Description	Default
4000	RW	0…9999	Protection – password	0
4001	RW	0 .. 1	Connections layout 0 - 3Ph/4W 1 - 3Ph/3W 2 - 1Ph/2W	0
4002	RW	0 .. 2	Voltage at terminal 2: 0 - voltage of the first phase L1 1 - voltage of the second phase L2 2 - voltage of the third phase L3	0
4003	RW	0 .. 2	Voltage at terminal 5: 0 - voltage of the first phase L1 1 - voltage of the second phase L2 2 - voltage of the third phase L3	1
4004	RW	0 .. 2	Voltage at terminal 8: 0 - voltage of the first phase L1 1 - voltage of the second phase L2 2 - voltage of the third phase L3	2
4005	RW	0..5	Current at terminals 1,3: 0 - current of the first phase I_{L1} 1 - reversed current direction of phase L1: $-I_{L1}$ 2 - current of the second phase I_{L2} 3 - reversed current direction of phase L2: $-I_{L2}$ 4 - current of the third phase I_{L3} 5 - reversed current direction of phase L3: $-I_{L3}$	0
4006	RW	0..5	Current at terminals 4,6: 0 - current of the first phase I_{L1} 1 - reversed current direction of phase L1: $-I_{L1}$ 2 - current of the second phase I_{L2} 3 - reversed current direction of phase L2: $-I_{L2}$ 4 - current of the third phase I_{L3} 5 - reversed current direction of phase L3: $-I_{L3}$	2
4007	RW	0..5	Current at terminals 7,9: 0 - current of the first phase I_{L1} 1 - reversed current direction of phase L1: $-I_{L1}$ 2 - current of the second phase I_{L2} 3 - reversed current direction of phase L2: $-I_{L2}$ 4 - current of the third phase I_{L3} 5 - reversed current direction of phase L3: $-I_{L3}$	4
4008	RW	0,1	Current input range: 1A or 5 A: 0 - 1 A, 1 - 5 A or 63 A depending on the version	1

4009	RW		Reserved	
4010	RW	0..18	Primary voltage of transformer, two older bytes	0
4011	RW	0..65535	Primary voltage of transformer, two younger bytes	100
4012	RW	1 .. 10000	Secondary voltage of transformer x 10	1000
4013	RW	1 .. 20000	Primary current of transformer	5
4014	RW	1 .. 1000	Secondary current of transformer	5
4015	RW	0...2	Active power averaging time P Demand, apparent power S Demand, current I Demand 0 – 15, 1- 30, 2- 60 minutes	0
4016	RW	0.1	Synchronization with real time clock 0 - no synchronization 1 - synchronization with the clock	1
4017	RW		Reserved	
4018	RW	577 .. 1000 V or 2300 .. 4000 V	Phase input voltage x10	577 or 2300
4019	RW	1000 .. 1700 V or 4000 .. 6900 V	Phase-to-phase input voltage x10	1000 or 4000
4020	RW		Reserved	
4021	RW		Reserved	
4022	RW		Reserved	
4023	RW		Reserved	
4024	RW	0…4	Resetting energy meters: 0 – no changes, 1- reset active energies, 2 – erase reactive energies, 3 – erase apparent energies, 4 – erase all energies	0
4025	RW	0.1	Resetting averaged parameters P Demand, S Demand, I Demand	0
4026	RW	0.1	Resetting min, max	0
4027	RW	0.1	Resetting alarm signaling maintenance	0
4028	RW		Reserved	
4029	RW		Reserved	
4030	RW	0...4	Alarm output 1- logic actions of conditions 1, 2, 3 0 – C1 1 – C1 v C2 v C3 2 – C1 ∧ C2 ∧ C3 3 – (C1 ∧ C2) v C3 4 – (C1 v C2) ∧ C3	0
4031	RW	0,1	Alarm output 1- state of relay at alarm occurrence: 0 - relay off 1 - relay on	1
4032	RW	0,1	Alarm output 1- lock of alarm deactivation	0
4033	RW	0,1	Alarm output 1 - signaling of alarm occurrence	0
4034	RW	0.1..52	Alarm output 1 – quantity for condition 1 (c1) (code acc. to table 3)	38
4035	RW	0..9	Alarm output 1 – type for condition 1: 0 – n_on, 1 – noFF, 2 – on, 3 – oFF, 4 – H_on, 5 – HoFF, 6 – 3non, 7 – 3noF, 8 – 3_on, 9 – 3_oF	0
4036	RW	-1440..0..1440 [$^{o}/_{oo}$]	Alarm output 1 - lower value of switching condition 1 of input nominal range	900
4037	RW	-1440..0..1440 [$^{o}/_{oo}$]	Alarm output 1 - upper value of switching condition 1 of input nominal range	1100
4038	RW	0..3600 s	Alarm output 1 – delay of condition 1 activation	0
4039	RW	0..3600 s	Alarm output 1 – delay of condition 1 deactivation	0
4040	RW	0..3600 s	Alarm output 1 – lock of condition 1 reactivation	0
4041	RW	0,1	Alarm output 1 – signaling condition 1 occurrence	0
4042	RW		Reserved	

4043	RW	0.1..52	Alarm output 1 – quantity for condition 2 (c2) (code acc. to table 8)	38
4044	RW	0..9	Alarm output 1 – type for condition 2: 0 – n_on, 1 – noFF, 2 – on, 3 – oFF, 4 – H_on, 5 – HoFF, 6 – 3non, 7 – 3noF, 8 – 3_on, 9 – 3_oF	0
4045	RW	-1440..0..1440 [$^{o}/_{oo}$]	Alarm output 1 - lower value of switching condition 2 of input nominal range	900
4046	RW	-1440..0..1440 [$^{o}/_{oo}$]	Alarm output 1 - upper value of switching condition 2 of input nominal range	1100
4047	RW	0..3600 s	Alarm output 1 – delay of condition 2 activation	0
4048	RW	0..3600 s	Alarm output 1 – delay of condition 2 deactivation	0
4049	RW	0..3600 s	Alarm output 1 – lock of condition 2 reactivation	0
4050	RW	0,1	Alarm output 1 – signaling condition 2 occurrence	0
4051	RW		Reserved	
4052	RW	0.1..52	Alarm output 1 – quantity for condition 3 (c3) (code acc. to table 8)	38
4053	RW	0..9	Alarm output 1 – type for condition 3: 0 – n_on, 1 – noFF, 2– on, 3 – oFF, 4 – H_on, 5 – HoFF, 6 – 3non, 7 – 3noF, 8 – 3_on, 9– 3_oF	0
4054	RW	-1440..0..1440 [$^{o}/_{oo}$]	Alarm output 1 - lower value of switching condition 3 of input nominal range	900
4055	RW	-1440..0..1440 [$^{o}/_{oo}$]	Alarm output 1 - upper value of switching condition 3 of input nominal range	1100
4056	RW	0..3600 s	Alarm output 1 – delay of condition 3 activation	0
4057	RW	0..3600 s	Alarm output 1 – delay of condition 3 deactivation	0
4058	RW	0..3600 s	Alarm output 1 – lock of condition 2 reactivation	0
4059	RW	0,1	Alarm output 1 – signaling condition 2 occurrence	0
4060	RW		Reserved	
4061	RW	0...4	Alarm output 2- logic actions of conditions 1, 2, 3 0 – C1 1 – C1 v C2 v C3 2 – C1 ∧ C2 ∧ C3 3 – (C1 ∧ C2) v C3 4 – (C1 v C2) ∧ C3	0
4062	RW	0,1	Alarm output 2- state of relay at alarm occurrence: 0 - relay off 1 - relay on	1
4063	RW	0,1	Alarm output 2- lock of alarm deactivation	0
4064	RW	0,1	Alarm output 2 - signaling of alarm occurrence	0
4065	RW	0.1..52	Alarm output 2 – quantity for condition 1 (c1) (code acc. to table 3)	38
4066	RW	0..9	Alarm output 2 – type for condition 1: 0 – n_on, 1 – noFF, 2 – on, 3 – oFF, 4 – H_on, 5 – HoFF, 6 – 3non, 7 – 3noF, 8 – 3_on, 9 – 3_oF	0
4067	RW	-1440..0..1440 [$^{o}/_{oo}$]	Alarm output 2 - lower value of switching condition 1 of input nominal range	900
4068	RW	-1440..0..1440 [$^{o}/_{oo}$]	Alarm output 2 - upper value of switching condition 1 of input nominal range	1100
4069	RW	0..3600 s	Alarm output 2 – delay of condition 1 activation	0
4070	RW	0..3600 s	Alarm output 2 – delay of condition 1 deactivation	0
4071	RW	0..3600 s	Alarm output 2 – lock of condition 1 reactivation	0
4072	RW	0,1	Alarm output 2– signaling condition 1 occurrence	0
4073	RW		Reserved	
4074	RW	0.1..52	Alarm output 2 – quantity for condition 2 (c2) (code acc. to table 3)	38
4075	RW	0..9	Alarm output 2 – type for condition 2: 0 – n_on, 1 – noFF, 2 – on, 3 – oFF, 4 – H_on, 5 – HoFF, 6 – 3non, 7 – 3noF, 8 – 3_on, 9 – 3_oF	0
4076	RW	-1440..0..1440 [$^{o}/_{oo}$]	Alarm output 2 - lower value of switching condition 2 of input nominal range	900

4077	RW	-1440..0..1440 [$^{o}/_{oo}$]	Alarm output 2 - upper value of switching condition 2 of input nominal range	1100
4078	RW	0..3600 s	Alarm output 2 – delay of condition 2 activation	0
4079	RW	0..3600 s	Alarm output 2 – delay of condition 2 deactivation	0
4080	RW	0..3600 s	Alarm output 2 – lock of condition 2 reactivation	0
4081	RW	0,1	Alarm output 2– signaling condition 2 occurrence	0
4082	RW		Reserved	
4083	RW	0.1..52	Alarm output 2 – quantity for condition 3 (c3) (code acc. to table 3)	38
4084	RW	0..9	Alarm output 2 – type for condition 3: 0 – n_on, 1 – noFF, 2 – on, 3 – oFF, 4 – H_on, 5 – HoFF, 6 – 3non, 7 – 3noF, 8 – 3_on, 9 – 3_oF	0
4085	RW	-1440..0..1440 [$^{o}/_{oo}$]	Alarm output 2 - lower value of switching condition 3 of input nominal range	900
4086	RW	-1440..0..1440 [$^{o}/_{oo}$]	Alarm output 2 - upper value of switching condition 3 of input nominal range	1100
4087	RW	0..3600 s	Alarm output 2 – delay of condition 3 activation	0
4088	RW	0..3600 s	Alarm output 2 – delay of condition 3 deactivation	0
4089	RW	0..3600 s	Alarm output 2 – lock of condition 2 reactivation	0
4090	RW	0,1	Alarm output 2 – signaling condition 2 occurrence	0
4091	RW		Reserved	
4092	RW		Reserved	
4093	RW		Reserved	
4094	RW		Reserved	
4095	RW		Reserved	
4096	RW		Reserved	
4097	RW		Reserved	
4098	RW		Reserved	
4099	RW		Reserved	
4100	RW	1..247	Address on the Modbus network.	1
4101	RW	0..3	Transmission mode: 0->8n2, 1->8e1, 2->8o1, 3->8n1	0
4102	RW	0..5	Baud rate: 0->4800, 1->9600 2->19200, 3->38400, 4->57600, 5->115200	1
4103	RW		Reserved	
4104	RW	0.1	Update the change of transmission parameters	0
4105	RW		Reserved	
4106	RW		Reserved	
4107	RW		Reserved	
4108	RW		Reserved	
4109	RW		Reserved	
4110	RW		Reserved	
4111	RW		Reserved	
4112	RW		Reserved	
4113	RW		Reserved	
4114	RW		Reserved	
4115	RW		Reserved	
4116	RW		Reserved	
4117	RW		Reserved	
4118	RW		Reserved	
4119	RW		Reserved	
4120	RW		Reserved	
4121	RW		Reserved	
4122	RW		Reserved	
4123	RW		Reserved	
4124	RW		Reserved	
4125	RW		Reserved	
4126	RW		Reserved	

4127	RW		Reserved	
4128	RW		Reserved	
4129	RW		Reserved	
4130	RW		Reserved	
4131	RW	0...65535	Third and second byte (B3.B2) of meter IP address, format IPv4 : B3.B2.B1.B0	49320 (0xC0A8 = 192.168)
4132	RW	0...65535	First and zero byte (B1.B0) of meter IP address, format IPv4: B3.B2.B1.B0	356 (0x0164 = 1.100)
4133	RW	0...65535	Third and second byte (B3.B2) of meter subnet mask address, mask format: B3.B2.B1.B0	65535
4134	RW	0...65535	First and zero byte (B1.B0) of meter subnet mask address, mask format: B3.B2.B1.B0	65280
4135	RW	0...65535	Third and second byte (B3.B2) of meter default gateway, gateway address format: B3.B2.B1.B0	49320
4136	RW	0...65535	First and zero byte (B1.B0) of meter default gateway address, gate address format: B3.B2.B1.B0	257
4137	RW	0...65535	Third and second byte (B3.B2) of meter DNS address, format IPv4: B3.B2.B1.B0	0x0808= 8.8
4138	RW	0...65535	First and zero byte (B1.B0) of meter DNS address, format IPv4: B3.B2.B1.B0	0x0808= 8.8
4139	RW		Reserved	
4140	RW		Reserved	
4141	RW	0 .. 2	Ethernet interface baud rate: 0 – automatic selection of baud rate 1 – 10 Mb/s 2 – 100 Mb/s	0
4142	RW		Reserved	
4143	RW		Reserved	
4144	RW		Reserved	
4145	RW		Reserved	
4146	RW		Reserved	
4147	RW		Reserved	
4148	RW		Reserved	
4149	RW	0,1	Memorizing new parameters of Ethernet interface and re-initiating the interface 0 – no changes, 1 – memorizing new parameters and re-initiating Ethernet interface,	0
4150	RW	0..2	Menu language: 0-ENG, 1-PL, 2-DE	0
4151	RW	0,1	Reserved	0
4152	RW	0.1	Recording standard parameters (with reset of energies and min and max averaged parameters), including Ethernet,	0
4153	RW	0..59	Seconds	0
4154	RW	0...2359	Hour *100 + Minutes	0
4155	RW	101…1231	Month * 100 + day	101
4156	RW	2015…2077	Year	2015
4157	RW		Reserved	
4158	RW		Reserved	
4159	RW		Reserved	

The values of alarm conditions switching recorded in registers 4036, 4037, 4054, 4055, 4067, 4068, 4076, 4077, 4085, 4086 are multiplied by 10 e.g. the value of 100 % should be typed as “1000”.

Table 14

Register address	Ope-rations	Range	Description	Default
4200	RW	7500 .. 7957	Register 1 of programmable read-only register group	7500
4201	RW	7500 .. 7957	Register 2 of programmable read-only register group	7501
4202	RW	7500 .. 7957	Register 3 of programmable read-only register group	7502
4203	RW	7500 .. 7957	Register 4 of programmable read-only register group	7503
4204	RW	7500 .. 7957	Register 5 of programmable read-only register group	7504
4205	RW	7500 .. 7957	Register 6 of programmable read-only register group	7505
4206	RW	7500 .. 7957	Register 7 of programmable read-only register group	7506
4207	RW	7500 .. 7957	Register 8 of programmable read-only register group	7507
4208	RW	7500 .. 7957	Register 9 of programmable read-only register group	7508
4209	RW	7500 .. 7957	Register 10 of programmable read-only register group	7509
4210	RW	7500 .. 7957	Register 11 of programmable read-only register group	7510
4211	RW	7500 .. 7957	Register 12 of programmable read-only register group	7511
4212	RW	7500 .. 7957	Register 13 of programmable read-only register group	7512
4213	RW	7500 .. 7957	Register 14 of programmable read-only register group	7513
4214	RW	7500 .. 7957	Register 15 of programmable read-only register group	7514
4215	RW	7500 .. 7957	Register 16 of programmable read-only register group	7515
4216	RW	7500 .. 7957	Register 17 of programmable read-only register group	7516
4217	RW	7500 .. 7957	Register 18 of programmable read-only register group	7517
4218	RW	7500 .. 7957	Register 19 of programmable read-only register group	7518
4219	RW	7500 .. 7957	Register 20 of programmable read-only register group	7519
4220	RW	7500 .. 7957	Register 21 of programmable read-only register group	7520
4221	RW	7500 .. 7957	Register 22 of programmable read-only register group	7521
4222	RW	7500 .. 7957	Register 23 of programmable read-only register group	7522
4223	RW	7500 .. 7957	Register 24 of programmable read-only register group	7523
4224	RW	7500 .. 7957	Register 25 of programmable read-only register group	7524
4225	RW	7500 .. 7957	Register 26 of programmable read-only register group	7525
4226	RW	7500 .. 7957	Register 27 of programmable read-only register group	7526
4227	RW	7500 .. 7957	Register 28 of programmable read-only register group	7527
4228	RW	7500 .. 7957	Register 29 of programmable read-only register group	7528
4229	RW	7500 .. 7957	Register 30 of programmable read-only register group	7529
4230	RW	7500 .. 7957	Register 31 of programmable read-only register group	7530
4231	RW	7500 .. 7957	Register 32 of programmable read-only register group	7531
4232	RW	7500 .. 7957	Register 33 of programmable read-only register group	7532
4233	RW	7500 .. 7957	Register 34 of programmable read-only register group	7533
4234	RW	7500 .. 7957	Register 35 of programmable read-only register group	7534
4235	RW	7500 .. 7957	Register 36 of programmable read-only register group	7535
4236	RW	7500 .. 7957	Register 37 of programmable read-only register group	7536
4237	RW	7500 .. 7957	Register 38 of programmable read-only register group	7537
4238	RW	7500 .. 7957	Register 39 of programmable read-only register group	7538
4239	RW	7500 .. 7957	Register 40 of programmable read-only register group	7539
4240	RW	7500 .. 7957	Register 41 of programmable read-only register group	7540
4241	RW	7500 .. 7957	Register 42 of programmable read-only register group	7541
4242	RW	7500 .. 7957	Register 43 of programmable read-only register group	7542
4243	RW	7500 .. 7957	Register 44 of programmable read-only register group	7543
4244	RW	7500 .. 7957	Register 45 of programmable read-only register group	7544
4245	RW	7500 .. 7957	Register 46 of programmable read-only register group	7545
4246	RW	7500 .. 7957	Register 47 of programmable read-only register group	7546
4247	RW	7500 .. 7957	Register 48 of programmable read-only register group	7547
4248	RW	7500 .. 7957	Register 49 of programmable read-only register group	7548
4249	RW	7500 .. 7957	Register 50 of programmable read-only register group	7549
4250	RW	7500 .. 7957	Register 51 of programmable read-only register group	7550
4251	RW	7500 .. 7957	Register 52 of programmable read-only register group	7551
4252	RW	7500 .. 7957	Register 53 of programmable read-only register group	7552
4253	RW	7500 .. 7957	Register 54 of programmable read-only register group	7553
4254	RW	7500 .. 7957	Register 55 of programmable read-only register group	7554
4255	RW	7500 .. 7957	Register 56 of programmable read-only register group	7559
4256	RW	7500 .. 7957	Register 57 of programmable read-only register group	7560
4257	RW	7500 .. 7957	Register 58 of programmable read-only register group	7561
4258	RW	7500 .. 7957	Register 59 of programmable read-only register group	7566

Register address	Ope-rations	Range	Description	Default
4259	RW	7500 .. 7957	Register 60 of programmable read-only register group	7567
4260	RW	0,1	Restore factory group 0 – no changes, 1 – restore the factory group	0

Table 15

Address of 16-bit registers 2x16 1032/ 2x16 3210	Register address 32 bits	Operations	Description
7200/7000	7400	R	Content of register set in register 4200
7202/7002	7401	R	Content of register set in register 4201
7204/7004	7402	R	Content of register set in register 4202
7206/7006	7403	R	Content of register set in register 4203
7208/7008	7404	R	Content of register set in register 4204
7210/7010	7405	R	Content of register set in register 4205
7212/7012	7406	R	Content of register set in register 4206
7214/7014	7407	R	Content of register set in register 4207
7216/7016	7408	R	Content of register set in register 4208
7218/7018	7409	R	Content of register set in register 4209
7220/7020	7410	R	Content of register set in register 4210
7222/7022	7411	R	Content of register set in register 4211
7224/7024	7412	R	Content of register set in register 4212
7226/7026	7413	R	Content of register set in register 4213
7228/7028	7414	R	Content of register set in register 4214
7230/7030	7415	R	Content of register set in register 4215
7232/7032	7416	R	Content of register set in register 4216
7234/7034	7417	R	Content of register set in register 4217
7236/7036	7418	R	Content of register set in register 4218
7238/7038	7419	R	Content of register set in register 4219
7240/7040	7420	R	Content of register set in register 4220
7242/7042	7421	R	Content of register set in register 4221
7244/7044	7422	R	Content of register set in register 4222
7246/7046	7423	R	Content of register set in register 4223
7248/7048	7424	R	Content of register set in register 4224
7250/7050	7425	R	Content of register set in register 4225
7252/7052	7426	R	Content of register set in register 4226
7254/7054	7427	R	Content of register set in register 4227
7256/7056	7428	R	Content of register set in register 4228
7258/7058	7429	R	Content of register set in register 4229
7260/7060	7430	R	Content of register set in register 4230
7262/7062	7431	R	Content of register set in register 4231
7264/7064	7432	R	Content of register set in register 4232
7266/7066	7433	R	Content of register set in register 4233
7268/7068	7434	R	Content of register set in register 4234
7270/7070	7435	R	Content of register set in register 4235
7272/7072	7436	R	Content of register set in register 4236
7274/7074	7437	R	Content of register set in register 4237
7276/7076	7438	R	Content of register set in register 4238
7278/7078	7439	R	Content of register set in register 4239
7280/7080	7440	R	Content of register set in register 4240
7282/7082	7441	R	Content of register set in register 4241
7284/7084	7442	R	Content of register set in register 4242
7286/7086	7443	R	Content of register set in register 4243
7288/7088	7444	R	Content of register set in register 4244
7290/7090	7445	R	Content of register set in register 4245
7292/7092	7446	R	Content of register set in register 4246
7294/7094	7447	R	Content of register set in register 4247

7296/7096	7448	R	Content of register set in register 4248
7298/7098	7449	R	Content of register set in register 4249
7300/7100	7450	R	Content of register set in register 4250
7302/7102	7451	R	Content of register set in register 4251
7304/7104	7452	R	Content of register set in register 4252
7306/7106	7453	R	Content of register set in register 4253
7308/7108	7454	R	Content of register set in register 4254
7310/7110	7455	R	Content of register set in register 4255
7312/7112	7456	R	Content of register set in register 4256
7314/7114	7457	R	Content of register set in register 4257
7316/7116	7458	R	Content of register set in register 4258
7318/7118	7459	R	Content of register set in register 4259

Table 16

Register address	Operations	Range	Description	Default
4300	RW	0…1	Backlight: 0 – disabled, 1 – enabled	1
4301	RW	0 .. 3600	Backlight shutdown time	0
4302	RW		Reserved	
4303	RW	0x0001...0xFFFF	Enabling displaying pages Bit0 – page 1, Bit1 – page 2, ...Bit15 – page 16	0xFFFF
4304	RW	0x0000...0x007F	Enabling displaying pages Bit0 – page 17, Bit1 – page 18, ...Bit6 – page 23	0x007F
4305	RW	00..50	Page 1 display 1, U1	1
4306	RW	00..50	Page 1 display 2, U2	10
4307	RW	00..50	Page 1 display 3, U3	19
4308	RW	00..50	Page 2 display 1, U12	38
4309	RW	00..50	Page 2 display 2, U23	39
4310	RW	00..50	Page 2 display 3, U31	40
4311	RW	00..50	Page 3 display 1, I1	2
4312	RW	00..50	Page 3 display 2, I2	11
4313	RW	00..50	Page 3 display 3, I3	20
4314	RW	00..50	Page 4 display 1, P1	3
4315	RW	00..50	Page 4 display 2, P2	12
4316	RW	00..50	Page 4 display 3, P3	21
4317	RW	00..50	Page 5 display 1, Q1	4
4318	RW	00..50	Page 5 display 2, Q2	13
4319	RW	00..50	Page 5 display 3, Q3	22
4320	RW	00..50	Page 6 display 1, PF1	6
4321	RW	00..50	Page 6 display 2, PF2	15
4322	RW	00..50	Page 6 display 3, PF3	24
4323	RW	00..50	Page 7 display 1, tg1	7
4324	RW	00..50	Page 7 display 2, tg2	16
4325	RW	00..50	Page 7 display 3, tg3	25
4326	RW	00..50	Page 8 display 1, ΣP	30
4327	RW	00..50	Page 8 display 2, ΣQ	31
4328	RW	00..50	Page 8 display 3, ΣS	32
4329	RW	00..50	Page 9 display 1, U avg	28
4330	RW	00..50	Page 9 display 2, I avg	29
4331	RW	00..50	Page 9 display 3, I(N)	45
4332	RW	00..50	Page 10 display 1, PFavg	33
4333	RW	00..50	Page 10 display 2, tgavg	34
4334	RW	00..50	Page 10 display 3, f	37
4335	RW	00..50	Page 11 display 1, U1	1
4336	RW	00..50	Page 11 display 2, I1	2
4337	RW	00..50	Page 11 display 3, P1	3

Register address	Ope-rations	Range	Description	Default
4338	RW	00..50	Page 12 display 1, Q1	4
4339	RW	00..50	Page 12 display 2, S1	5
4340	RW	00..50	Page 12 display 3, PF1	6
4341	RW	00..50	Page 13 display 1, U2	10
4342	RW	00..50	Page 13 display 2, I2	11
4343	RW	00..50	Page 13 display 3, P2	12
4344	RW	00..50	Page 14 display 1, Q2	13
4345	RW	00..50	Page 14 display 2, S2	14
4346	RW	00..50	Page 14 display 3, PF2	15
4347	RW	00..50	Page 15 display 1, U3	19
4348	RW	00..50	Page 15 display 2, I3	20
4349	RW	00..50	Page 15 display 3, P3	21
4350	RW	00..50	Page 16 display 1, Q3	22
4351	RW	00..50	Page 16 display 2, S3	23
4352	RW	00..50	Page 16 display 3, PF3	24
4353	RW	00..50	Page 17 display 1, P DMD	42
4354	RW	00..50	Page 17display 2, S DMD	43
4355	RW	00..50	Page 17display 3, I DMD	44
4356	RW	00..50	Page 18 display 1, ΣP	30
4357	RW	00..50	Page 18 display 2, En P+	48
4358	RW	00..50	Page 18 display 3, En P-	49
4359	RW	00..50	Page 19 display 1, ΣQ	31
4360	RW	00..50	Page 19 display 2, EnQL	50
4361	RW	00..50	Page 19 display 3, EnQC	51
4362	RW	00..50	Page 20 display 1, ΣS	32
4363	RW	00..50	Page 20 display 2, En S	52
4364	RW	00..50	Page 20 display 3, f	37
4365	RW	00..50	Page 21 display 1, TH U1	8
4366	RW	00..50	Page 21 display 2, TH U2	17
4367	RW	00..50	Page 21 display 3, TH U3	26
4368	RW	00..50	Page 22 display 1, TH I1	9
4369	RW	00..50	Page 22 display 2, TH I2	18
4370	RW	00..50	Page 22 display 3, TH I3	17
4371	RW		Reserved	
4372	RW		Reserved	
4373	RW		Reserved	
4374	RW		Reserved	
4375	RW		Reserved	
4376	RW		Reserved	
4377	RW		Reserved	
4378	RW		Reserved	
4379	RW		Reserved	
4380	RW		Reserved	
4381	RW		Reserved	
4382	RW		Reserved	
4383	RW		Reserved	
4384	RW		Reserved	
4385	RW	0..3	Restore factory pages 0 - no 1 - 3Ph/4W 2 - 3Ph/3W 3 - 1PH/2W	0
4386	RW		Reserved	
4387	RW		Reserved	
4388	RW		Reserved	

Table 20

Register address	Ope-rations	Range	Description	Default
4400	R		Reserved	
4401	R	0..65535	Identifier	EA
4402	R	0..65535	Bootloader version x 100	-
4403	R	0..65535	Program version x100	-
4404	R		Reserved	
4405	R	0..65535	Ordering code	-
4406	R	0..65535	Nominal voltage x10	577/2300
4407	R	0..65535	Nominal voltage x10	1000/4000
4408	R	0..65535	Nominal current x 100	100/6300
4409	R	0..65535	Nominal current x 100	500/6300
4410	R		Reserved	
4411	R	0..65535	Seventh and sixth byte (B7.B6) of serial number , format B7:B6:B5:B4:B3:B2:B1:B0	-
4412	R	0..65535	Fifth and fourth byte (B5.B4) of serial number , format B7:B6:B5:B4:B3:B2:B1:B0	-
4413	R	0..65535	Third and second byte (B3.B2) of serial number , format B7:B6:B5:B4:B3:B2:B1:B0	-
4414	R	0..65535	First and zero byte (B1.B0) of serial number , format B7:B6:B5:B4:B3:B2:B1:B0	-
4415	R	0..65535	Status register 1– description below	0
4416	R	0..65535	Status register 2– description below	0
4417	R	0..65535	Status register 3– description below	0
4418	R	0..65535	Status register 4– description below	0
4419	R	0..65535	Status register 5– description below	0
4420	R	0..65535	Status register 6– description below	0
4421	R	0...65535	Fifth and fourth byte (B5.B4) of meter MAC address, format B5:B4:B3:B2:B1:B0	-
4422	R	0...65535	Third and second byte (B3.B2) of meter MAC address, format B5:B4:B3:B2:B1:B0	-
4423	R	0...65535	First and zero byte (B1.B0) of meter MAC address, format B5:B4:B3:B2:B1:B0	-
4424	R		Reserved	
4425	R		Reserved	
4426	R	0..152	Active imported energy, two older bytes	0
4427	R	0..65535	Active imported energy, two younger bytes	0
4428	R	0..152	Active exported energy, two older bytes	0
4429	R	0..65535	Active exported energy, two younger bytes	0
4430	R	0..152	Reactive inductive energy, two older bytes	0
4431	R	0..65535	Reactive inductive energy, two younger bytes	0
4432	R	0..152	Reactive capacitive energy, two older bytes	0
4433	R	0..65535	Reactive capacitive energy, two younger bytes	0
4434	R	0..152	Apparent energy, two older bytes	0
4435	R	0..65535	Apparent energy, two younger bytes	0
4436	R		Reserved	
4437	R		Reserved	
4438	R		Reserved	
4439	R		Reserved	
4440	R		Reserved	
4441	R		Reserved	
4442	R		Reserved	
4443	R		Reserved	
4444	R		Reserved	
4445	R		Reserved	
4446	R		Reserved	
4447			Reserved	

...				
4461	R		reserved	0
4462	R	0..152	Active imported 3-phase energy for the previous year, two older bytes	0
4463	R	0..65535	Active imported 3-phase energy for the previous year, two younger bytes	0
4464	R	0..152	Active exported 3-phase energy for the previous year, two older bytes	0
4465	R	0..65535	Active exported 3-phase energy for the previous year, two younger bytes	0
4466	R	0..152	Active imported 3-phase energy for the current year, two older bytes	0
4467	R	0..65535	Active imported 3-phase energy for the current year, two younger bytes	0
4468	R	0..152	Active exported 3-phase energy for the current year, two older bytes	0
4469	R	0..65535	Active exported 3-phase energy for the current year, two younger bytes	0
4470	R	0..152	Active imported 3-phase energy for the current month, two older bytes	0
4471	R	0..65535	Active imported 3-phase energy for the current month, two younger bytes	0
4472	R	0..152	Active exported 3-phase energy for the current month, two older bytes	0
4473	R	0..65535	Active exported 3-phase energy for the current month, two younger bytes	0
4474	R	0..152	Active imported 3-phase energy for the current week, two older bytes	0
4475	R	0..65535	Active imported 3-phase energy for the current week, two younger bytes	0
4476	R	0..152	Active exported 3-phase energy for the current week, two older bytes	0
4477	R	0..65535	Active exported 3-phase energy for the current week, two younger bytes	0
4478	R	0..152	Active imported 3-phase energy for the current 48 hours, two older bytes	0
4479	R	0..65535	Active imported 3-phase energy for the current 48 hours, two younger bytes	0
4480	R	0..152	Active exported 3-phase energy for the current 48 hours, two older bytes	0
4481	R	0..65535	Active exported 3-phase energy for the current 48 hours, two younger bytes	0
4482	R	0..152	Active imported 3-phase energy for the current 24 hours, two older bytes	0
4483	R	0..65535	Active imported 3-phase energy for the current 24 hours, two younger bytes	0
4484	R	0..152	Active exported 3-phase energy for the current 24 hours, two older bytes	0
4485	R	0..65535	Active exported 3-phase energy for the current 24 hours, two younger bytes	0

Energy is made available in hundreds of watt-hours (var-hours) in double 16-bit register, and for this reason, they must be divided by 100 when calculating values of particular energy from registers, i.e.:

Imported active energy = (register 4426 value x 65536 + register 4427 value) /100 [kWh]
Exported active energy = (register 4428 value x 65536 + register 4429 value) /100 [kWh]
Reactive inductive energy = (register 4430 value x 65536 + register 4431 value) /100 [kVarh]
Reactive capacitive energy = (register 4432 value x 65536 + register 4433 value) /100 [kVarh]
Apparent energy = (register 4434 value x 65536 + register 4435) value / 100 [kVAh]

Similarly, energy from registers 4462 to 4485 should be converted.

Device status register 1 (address 4415, R):

Bit 15 – “1” – FRAM memory corruption
Bit 14 - "1" - no input calibration
Bit13 - Reserved
Bit 12 – Reserved
Bit 11 – “1” – error in configuration registers
Bit 10 – “1” – error in displayed pages registers
Bit 9 – “1” – error in configuration registers of programmable read-only register group
Bit 8 – “1” – error of energy values
Bit 7 – “1” – error of phase sequence
Bit 6 – “1” – Reserved
Bit 5 – “1” – Reserved
Bit 4 – Reserved
Bit 3 – Reserved
Bit 2 – „1” – presence of Ethernet and internal memory
Bit 1 – “1” – used battery of RTC
Bit 0 – Reserved

Status register 2 (address 4416, R):

Bit 15 - “1” – signaling of condition 3 occurrence for alarm 2
Bit 14 - “1” – signaling of condition 2 occurrence for alarm 2
Bit 13 - “1” – signaling of condition 1 occurrence for alarm 2
Bit 12 - “1” – signaling of alarm 2 occurrence
Bit 11 - “1” – alarm 2 condition 3 active
Bit 10 - “1” – alarm 2 condition 2 active
Bit 9 - “1” – alarm 2 condition 1 active
Bit 8 - “1” – alarm 2 active
Bit 7 - “1” – signaling of condition 3 occurrence for alarm 1
Bit 6 - “1” – signaling of condition 2 occurrence for alarm 1
Bit 5 - “1” – signaling of condition 1 occurrence for alarm 1
Bit 4 - “1” – signaling of alarm 1 occurrence
Bit 3 - “1” – alarm 1 condition 3 active
Bit 2 - “1” – alarm 1 condition 2 active
Bit 1 - “1” – alarm 1 condition 1 active
Bit 0 - “1” – alarm 1 active

Status register 3 (address 4417, R): File archive status

Bit 15 – Ethernet connected
Bit 14…0 – reserved

Status register 4 (address 4418, R) type of reactive power :

Bit 15 – reserved
Bit 14 – “1” – Demand – capacitive 3L maximum
Bit 13 – “1” – Demand – capacitive 3L minimum
Bit 12 – “1” – Demand – capacitive 3L
Bit 11 – “1” – capacitive 3L maximum
Bit 10 – “1” – capacitive 3L minimum
Bit 9 – “1” – capacitive 3L
Bit 8 – “1” – capacitive L3 maximum
Bit 7 – “1” – capacitive L3 minimum
Bit 6 – “1” – capacitive L3
Bit 5 – “1” – capacitive L2 maximum
Bit 4 – “1” – capacitive L2 minimum
Bit 3 – “1” – capacitive L2
Bit 2 – “1” – capacitive L1 maximum
Bit 1 – “1” – capacitive L1 minimum
Bit 0 – “1” – capacitive L1

Status register 5 (address 4419, R):

Bit 8 – “1” – alarm 1, condition 3 for L3 phase active
Bit 7 – “1” – alarm 1, condition 3 for L2 phase active
Bit 6 – “1” – alarm 1, condition 3 for L1 phase active
Bit 5 – “1” – alarm 1, condition 2 for L3 phase active
Bit 4 – “1” – alarm 1, condition 2 for L2 phase active
Bit 3 – “1” – alarm 1, condition 2 for L1 phase active
Bit 2 – “1” – alarm 1, condition 1 for L3 phase active
Bit 1 – “1” – alarm 1, condition 1 for L2 phase active
Bit 0 – “1” – alarm 1, condition 1 for L1 phase active

Status register 6 (address 4420, R):

Bit 8 – “1” – alarm 2, condition 3 for L3 phase active
Bit 7 – “1” – alarm 2, condition 3 for L2 phase active
Bit 6 – “1” – alarm 2, condition 3 for L1 phase active
Bit 5 – “1” – alarm 2, condition 2 for L3 phase active
Bit 4 – “1” – alarm 2, condition 2 for L2 phase active
Bit 3 – “1” – alarm 2, condition 2 for L1 phase active
Bit 2 – “1” – alarm 2, condition 1 for L3 phase active
Bit 1 – “1” – alarm 2, condition 1 for L2 phase active
Bit 0 – “1” – alarm 2, condition 1 for L1 phase active

Table 18

Address of register	Opera-tions	Range	Description	Default
4500	RW	0…65535	2 first signs of the Profinet device name in the system	
⋮	RW	⋮	⋮	
4619	RW		238;239 sign of the Profinet device name in the system	
4620	RW	0.1	Memorizing new parameters of Profinet interface and re-initiating the interface 0 – no changes, 1 – memorizing new parameters and re-initiating Profinet inter-face,	0

Table 19

Address of 16 bit registers 2x16 1032/ 2x16 3210	Address of 32-bit registers	Operations	Description	Unit	3Ph / 4W	3Ph / 3W	1Ph / 2W
6000/8000	7500	R	Voltage of L1 phase	V	√	x	√
6002/8002	7501	R	Current of L1 phase	A	√	√	√
6004/8004	7502	R	Active power of L1 phase	W	√	x	√
6006/8006	7503	R	Reactive power of L1 phase	VAr	√	x	√
6008/8008	7504	R	Apparent power of L1 phase	VA	√	x	√
6010/8010	7505	R	Factor of active power of L1 phase (PF1=P1/S1)	-	√	x	√
6012/8012	7506	R	tg factor φ of L1 phase (tg1 =Q1/P1)	-	√	x	√
6014/8014	7507	R	THD U1*	%	√	x	√
6016/8016	7508	R	THD I1	%	√	x	√
6018/8018	7509	R	Voltage of L2 phase	V	√	x	x
6020/8020	7510	R	Current of L2 phase	A	√	√	x
6022/8022	7511	R	Active power of L2 phase	W	√	x	x
6024/8024	7512	R	Reactive power of L2 phase	VAr	√	x	x
6026/8026	7513	R	Apparent power of L2 phase	VA	√	x	x
6028/8028	7514	R	Factor of active power of L2 phase (PF2=P2/S2)	-	√	x	x
6030/8030	7515	R	tg factor φ of L2 phase (tg2 =Q2/P2)	-	√	x	x
6032/8032	7516	R	THD U2*	%	√	x	x
6034/8034	7517	R	THD I2	%	√	x	x
6036/8036	7518	R	Voltage of L3 phase	V	√	x	x
6038/8038	7519	R	Current of L3 phase	A	√	√	x
6040/8040	7520	R	Active power of L3 phase	W	√	x	x
6042/8042	7521	R	Reactive power of L3 phase	VAr	√	x	x
6044/8044	7522	R	Apparent power of L3 phase	VA	√	x	x
6046/8046	7523	R	Factor of active power of L3 phase (PF3=P3/S3)	-	√	x	x
6048/8048	7524	R	tg factor φ of L3 phase (tg3 =Q3/P3)	-	√	x	x
6050/8050	7525	R	THD U3*	%	√	x	x
6052/8052	7526	R	THD I3	%	√	x	x
6054/8054	7527	R	Average 3-phase voltage	V	√	x	x
6056/8056	7528	R	Average 3-phase current	A	√	√	x
6058/8058	7529	R	3-phase active power (P1+P2+P3)	W	√	√	x
6060/8060	7530	R	3-phase reactive power (Q1+Q2+Q3)	VAr	√	√	x
6062/8062	7531	R	3-phase apparent power (S1+S2+S3)	VA	√	√	x
6064/8064	7532	R	3-phase active power factor (PF=P/S)	-	√	√	x
6066/8066	7533	R	tg factor φ 3-phase average (tg=Q/P)	-	√	√	x
6068/8068	7534	R	THD U* 3-phase average	%	√	x	x
6070/8070	7535	R	THD I 3-phase average	%	√	x	x
6072/8072	7536	R	Frequency	f	√	√	√

6074/8074	7537	R	Phase-to-phase voltage L_{1-2}	V	√	√	x
6076/8076	7538	R	Phase-to-phase voltage L_{2-3}	V	√	√	x
6078/8078	7539	R	Phase-to-phase voltage L3-1	V	√	√	x
6080/8080	7540	R	Average phase-to-phase voltage L1-2	V	√	√	x
6082/8082	7541	R	averaged active power (P Demand)	W	√	√	x
6084/8084	7542	R	averaged apparent power (S Demand)	VA	√	√	x
6086/8086	7543	R	averaged current (I Demand)	A	√	√	x
6088/8088	7544	R	Current in neutral wire (calculated from vectors)	A	√	x	x
6090/8090	7545	R	Active imported energy 3-phase (number of register 7546 overflows, reset after 9999.9 MWh is reached)	100 MWh	√	√	√
6092/8092	7546	R	Active imported energy 3 –phase (counter up to 99999.99 kWh)	kWh	√	√	√
6094/8094	7547	R	Active exported energy 3-phase (number of register 7548 overflows, reset after 9999.9 MWh is reached)	100 MWh	√	√	√
6096/8096	7548	R	Active exported energy 3 –phase (counter up to 99999.99 kWh)	kWh	√	√	√
6098/8098	7549	R	Reactive exported energy 3-phase (number of register 7550 overflows, reset after 9999.9 MVArh is reached)	100 MVArh	√	√	√
6100/8100	7550	R	Reactive inductive energy 3 –phase (counter up to 99999.99 kVArh)	kVArh	√	√	√
6102/8102	7551	R	Reactive capacitive energy 3-phase (number of register 7552 overflows, reset after 9999.9 MVArh is reached)	100 MVArh	√	√	√
6104/8104	7552	R	Reactive capacitive energy 3 –phase (counter up to 99999.99 kVArh)	kVArh	√	√	√
6106/8106	7553	R	Apparent energy 3-phase (number of register 7554 overflows, reset after 9999.9 MVAh is reached)	100 MVAh	√	√	√
6108/8108	7554	R	Apparent energy (caounter up to 99999.99 kVAh)	kVAh	√	√	√
6110/8110	7555	R	Time – seconds	sec	√	√	√
6112/8112	7556	R	Time – hours, minutes		√	√	√
6114/8114	7557	R	Date - month, day		√	√	√
6116/8116	7558	R	Year – 2014 - 2100		√	√	√
6118/8118	7559	R	Status register 1	-	√	√	√
6120/8120	7560	R	Status register 2	-	√	√	√
6122/8122	7561	R	Status register 3	-	√	√	√
6124/8124	7562	R	Status register 4	-	√	√	√
6126/8126	7563	R	Status register 5	-	√	√	√
6128/8128	7564	R	Status register 6	-	√	√	√
6130/8130	7565	R	reserved	-	–	–	-
6132/8132	7566	R	reserved	-	–	–	-
6134/8134	7567	R	reserved	-	–	–	-
6136/8136	7568	R	Voltage L1 min	V	√	x	√
6138/8138	7569	R	Voltage L1 max	V	√	x	√
6140/8140	7570	R	Voltage L2 min	V	√	x	x
6142/8142	7571	R	Voltage L2 max	V	√	x	x
6144/8144	7572	R	Voltage L3 min	V	√	x	x
6146/8146	7573	R	Voltage L3 max	V	√	x	x
6148/8148	7574	R	Current L1 min	A	√	√	x
6150/8150	7575	R	Current L1 max	A	√	√	x
6152/8152	7576	R	Current L2 min	A	√	√	x
6154/8154	7577	R	Current L2 max	A	√	√	x
6156/8156	7578	R	Current L3 min	A	√	√	x
6158/8158	7579	R	Current L3 max	A	√	√	x
6160/8160	7580	R	Active power L1 min	W	√	x	√
6162/8162	7581	R	Active power L1 max	W	√	x	√

6164/8164	7582	R	Active power L2 min	W	√	x	x
6166/8166	7583	R	Active power L2 max	W	√	x	x
6168/8168	7584	R	Active power L3 min	W	√	x	x
6170/8170	7585	R	Active power L3 max	W	√	x	x
6172/8172	7586	R	Reactive power L1 min	Var	√	x	√
6174/8174	7587	R	Reactive power L1 max	Var	√	x	√
6176/8176	7588	R	Reactive power L2 min	Var	√	x	x
6178/8178	7589	R	Reactive power L2 max	Var	√	x	x
6180/8180	7590	R	Reactive power L3 min	Var	√	x	x
6182/8182	7591	R	Reactive power L3 max	Var	√	x	x
6184/8184	7592	R	Apparent power L1 min	VA	√	x	√
6186/8186	7593	R	Apparent power L1 max	VA	√	x	√
6188/8188	7594	R	Apparent power L2 min	VA	√	x	x
6190/8190	7595	R	Apparent power L2 max	VA	√	x	x
6192/8192	7596	R	Apparent power L3 min	VA	√	x	x
6194/8194	7597	R	Apparent power L3 max	VA	√	x	x
6196/8196	7598	R	Power factor (PF) L1 min	-	√	x	√
6198/8198	7599	R	Power factor (PF) L1 max	-	√	x	√
6200/8200	7600	R	Power factor (PF) L2 min	-	√	x	x
6202/8202	7601	R	Power factor (PF) L2 max	-	√	x	x
6204/8204	7602	R	Power factor (PF) L3 min	-	√	x	x
6206/8206	7603	R	Power factor (PF) L3 max	-	√	x	x
6208/8208	7604	R	Ratio of reactive to active power L1 min	-	√	x	√
6210/8210	7605	R	Ratio of reactive to active power L1 max	-	√	x	√
6212/8212	7606	R	Ratio of reactive to active power L2 min	-	√	x	x
6214/8214	7607	R	Ratio of reactive to active power L2 max	-	√	x	x
6216/8216	7608	R	Ratio of reactive to active power L3 min	-	√	x	x
6218/8218	7609	R	Ratio of reactive to active power L3 max	-	√	x	x
6220/8220	7610	R	Phase-to-phase voltage L_{1-2} min	V	√	√	x
6222/8222	7611	R	Phase-to-phase voltage L_{1-2} max	V	√	√	x
6224/8224	7612	R	Phase-to-phase voltage L_{2-3} min	V	√	√	x
6226/8226	7613	R	Phase-to-phase voltage L_{2-3} max	V	√	√	x
6228/8228	7614	R	Phase-to-phase voltage L_{3-1} min	V	√	√	x
6230/8230	7615	R	Phase-to-phase voltage L_{3-1} max	V	√	√	x
6232/8232	7616	R	Average 3-phase voltage min	V	√	x	x
6234/8234	7617	R	Average 3-phase voltage max	V	√	x	x
6236/8236	7618	R	Average 3-phase current min	A	√	√	x
6238/8238	7619	R	Average 3-phase current max	A	√	√	x
6240/8240	7620	R	3-phase active power min	W	√	√	x
6242/8242	7621	R	3-phase active power max	W	√	√	x
6244/8244	7622	R	3-phase reactive power min	var	√	√	x
6246/8246	7623	R	3-phase reactive power max	var	√	√	x
6248/8248	7624	R	3-phase apparent power min	VA	√	√	x
6250/8250	7625	R	3-phase apparent power max	VA	√	√	x
6252/8252	7626	R	Power factor (PF) min	-	√	√	x
6254/8254	7627	R	Power factor (PF) max	-	√	√	x
6256/8256	7628	R	Ratio of reactive to active power 3-phase average min	-	√	√	x
6258/8258	7629	R	Ratio of reactive to active power 3-phase average max	-	√	√	x
6260/8260	7630	R	Frequency min	Hz	√	√	√
6262/8262	7631	R	Frequency max	Hz	√	√	√

6264/8264	7632	R	Average phase-to-phase voltage min	V	√	√	x
6266/8266	7633	R	Average phase-to-phase voltage max	V	√	√	x
6268/8268	7634	R	Averaged active power (P Demand) min	W	√	√	√
6270/8270	7635	R	Averaged active power (P Demand) max	W	√	√	√
6272/8272	7636	R	Averaged apparent power (S Demand) min	VA	√	√	√
6274/8274	7637	R	Averaged apparent power (S Demand) max	VA	√	√	√
6276/8276	7638	R	Averaged current (I Demand) min	A	√	√	√
6278/8278	7639	R	Averaged current (I Demand) max	A	√	√	√
6280/8280	7640	R	Current in neutral wire min	A	√	x	x
6282/8282	7641	R	Current in neutral wire max	A	√	x	x
6284/8284	7642	R	reserved	-	–	–	–
6286/8286	7643	R	reserved	-	–	–	–
6288/8288	7644	R	reserved	-	–	–	–
6290/8290	7645	R	reserved	-	–	–	–
6292/8292	7646	R	THD U1 min	%	√	x	√
6294/8294	7647	R	THD U1 max	%	√	x	√
6296/8296	7648	R	THD U2 min	%	√	x	x
6298/8298	7649	R	THD U2 max	%	√	x	x
6300/8300	7650	R	THD U3 min	%	√	x	x
6302/8302	7651	R	THD U3 max	%	√	x	x
6304/8304	7652	R	THD U min	%	√	x	x
6306/8306	7653	R	THD U max	%	√	x	x
6308/8308	7654	R	THD I1 min	%	√	x	√
6310/8310	7655	R	THD I1 max	%	√	x	√
6312/8312	7656	R	THD I2 min	%	√	x	x
6314/8314	7657	R	THD I2 max	%	√	x	x
6316/8316	7758	R	THD I3 min	%	√	x	x
6318/8318	7759	R	THD I3 max	%	√	x	x
6320/8320	7660	R	THD I min	%	√	x	x
6322/8322	7661	R	THD I max	%	√	x	x
6324/8324	7662	R	HarU1[2] 2nd harmonics of voltage of L1 phase	%	√	x	√
6326/8326	7663	R	HarU1[3] 3rd harmonics of voltage of L1 phase	%	√	x	√
:	:	R	:				
:	:	R	:				
6420/8420	7710	R	HarU1[50] 50th harmonics of voltage of L1 phase	%	√	x	√
6422/8422	7711	R	HarU1[51] 51st harmonics of voltage of L1 phase	%	√	x	√
6424/8424	7712	R	HarU2[2] 2nd harmonics of voltage of L2 phase	%	√	x	x
6426/8426	7713	R	HarU2[3] 3rd harmonics of voltage of L2 phase	%	√	x	x
:	:	R	:				
:	:	R	:				
6520/8520	7760	R	HarU2[50] 50th harmonics of voltage of L2 phase	%	√	x	x
6522/8522	7761	R	HarU2[51] 51st harmonics of voltage of L2 phase	%	√	x	x
6524/8524	7762	R	HarU3[2] 2nd harmonics of voltage of L3 phase	%	√	x	x
6526/8526	7763	R	HarU3[3] 3rd harmonics of voltage of L3 phase	%	√	x	x
:	:	R	:				
:	:	R	:				
6620/8620	7810	R	HarU3[50] 50th harmonics of voltage of L3 phase	%	√	x	x
6622/8622	7811	R	HarU3[51] 51st harmonics of voltage of L3 phase	%	√	x	x
6624/8624	7812	R	HarI1[2] 2nd harmonics of current of L1 phase	%	√	x	√
6626/8626	7813	R	HarI1[3] 3rd harmonics of current of L1 phase	%	√	x	√
:	:	R	:				
:	:	R	:				
6720/8720	7860	R	HarI1[50] 50th harmonics of current of L1 phase	%	√	x	√
6722/8722	7861	R	HarI1[51] 51st harmonics of current of L1 phase	%	√	x	√
6724/8724	7862	R	HarI2[2] 2nd harmonics of current of L2 phase	%	√	x	x

6726/8726	7863	R	HarI2[3] 3rd harmonics of current of L2 phase	%	√	x	x
:	:	R	:				
:	:	R	:				
6820/8820	7910	R	HarI2[50] 50th harmonics of current of L2 phase	%	√	x	x
6822/8822	7911	R	HarI2[51] 51st harmonics of current of L2 phase	%	√	x	x
6824/8824	7912	R	HarI3[2] 2nd harmonics of current of L3 phase	%	√	x	x
6826/8826	7913	R	HarI3[3] 3rd harmonics of current of L3 phase	%	√	x	x
:	:	R	:				
:	:	R	:				
6920/8920	7960	R	HarI3[50] 50th harmonics of current of L3 phase	%	√	x	x
6922/8922	7961	R	HarI3[51] 51st harmonics of current of L3 phase	%	√	x	x
6924/8924	7962	R	Mean reactive power	var	√	√	√
6926/8926	7963	R	Mean reactive power min	var	√	√	√
6928/8928	7964	R	Mean reactive power max	var	√	√	√
6930/8930	7965	R	Mean active power factor	-	√	√	√
6932/8932	7966	R	Mean active power factor min	-	√	√	√
6934/8934	7967	R	Mean active power factor max	-	√	√	√
6936/8936	7968	R	Active imported 3-phase energy for the previous year (overflows number of register 7563, reset after 9999.9 MWh is reached)	100 MWh	√	√	√
6938/8938	7969	R	Active imported 3-phase energy for the previous year (counter up to 9999.99 kWh)	kWh	√	√	√
6940/8940	7970	R	Active exported 3-phase energy for the previous year (overflows number of register 7565, reset after 9999.9 MWh is reached)	100 MWh	√	√	√
6942/8942	7971	R	Active exported 3-phase energy for the previous year (counter up to 9999.99 kWh)	kWh	√	√	√
6944/8944	7972	R	Active imported 3-phase energy for the current year (overflows number of register 7567, reset after 9999.9 MWh is reached)	100 MWh	√	√	√
6946/8946	7973	R	Active imported 3-phase energy for the current year (counter up to 9999.99 kWh)	kWh	√	√	√
6948/8948	7974	R	Active exported 3-phase energy for the current year (overflows number of register 7569, reset after 9999.9 MWh is reached)	100 MWh	√	√	√
6950/8950	7975	R	Active exported 3-phase energy for the current year (counter up to 9999.99 kWh)	kWh	√	√	√
6952/8952	7976	R	Active imported 3-phase energy for the current month (overflows number of register 7571, reset after 9999.9 MWh is reached)	100 MWh	√	√	√
6954/8954	7977	R	Active imported 3-phase energy for the current month (counter up to 9999.99 kWh)	kWh	√	√	√
6956/8956	7978	R	Active exported 3-phase energy for the current month (overflows number of register 7573, reset after 9999.9 MWh is reached)	100 MWh	√	√	√
6958/8958	7979	R	Active exported 3-phase energy for the current month (counter up to 9999.99 kWh)	kWh	√	√	√
6960/8960	7980	R	Active imported 3-phase energy for the current week (overflows number of register 7575, reset after 9999.9 MWh is reached)	100 MWh	√	√	√
6962/8962	7981	R	Active imported 3-phase energy for the current week (counter up to 9999.99 kWh)	kWh	√	√	√
6964/8964	7982	R	Active exported 3-phase energy for the current week (overflows number of register 7577, reset after 9999.9 MWh is reached)	100 MWh	√	√	√
6966/8966	7983	R	Active exported 3-phase energy for the current week (counter up to 9999.99 kWh)	kWh	√	√	√
6968/8968	7984	R	Active imported 3-phase energy for the current 48 hours (overflows number of register 7579, reset after 9999.9 MWh is reached)	100 MWh	√	√	√
6970/8970	7985	R	Active imported 3-phase energy for the current 48 hours (counter up to 9999.99 kWh)	kWh	√	√	√

6972/8972	7986	R	Active exported 3-phase energy for the current 48 hours (overflows number of register 7581, reset after 9999.9 MWh is reached)	100 MWh	√	√	√
6974/8974	7987	R	Active exported 3-phase energy for the current 48 hours (counter up to 9999.99 kWh)	kWh	√	√	√
6976/8976	7988	R	Active imported 3-phase energy for the current 24 hours (overflows number of register 7583, reset after 9999.9 MWh is reached)	100 MWh	√	√	√
6978/8978	7989	R	Active imported 3-phase energy for the current 24 hours (counter up to 9999.99 kWh)	kWh	√	√	√
6980/8980	7990	R	Active exported 3-phase energy for the current 24 hours (overflows number of register 7585, reset after 9999.9 MWh is reached)	100 MWh	√	√	√
6982/8982	7991	R	Active exported 3-phase energy for the current 24 hours (counter up to 9999.99 kWh)	kWh	√	√	√

* In 3-phase 3-wire system (3Ph/3W) respectively THD U12, THD U23, THD U31,THD U123

11 FIRMWARE UPGRADE

11.1 Firmware upgrade - the main program of the meter

NR30PNET meters have a feature that allows the user to upgrade the software using a PC with eCon software. Free eCon software and update files are available at www.lumel.com.pl. Upgrade of the meter software (firmware) can be done via the RS485 interface. The update is done in LUMEL UPDATER tab.

a) b)

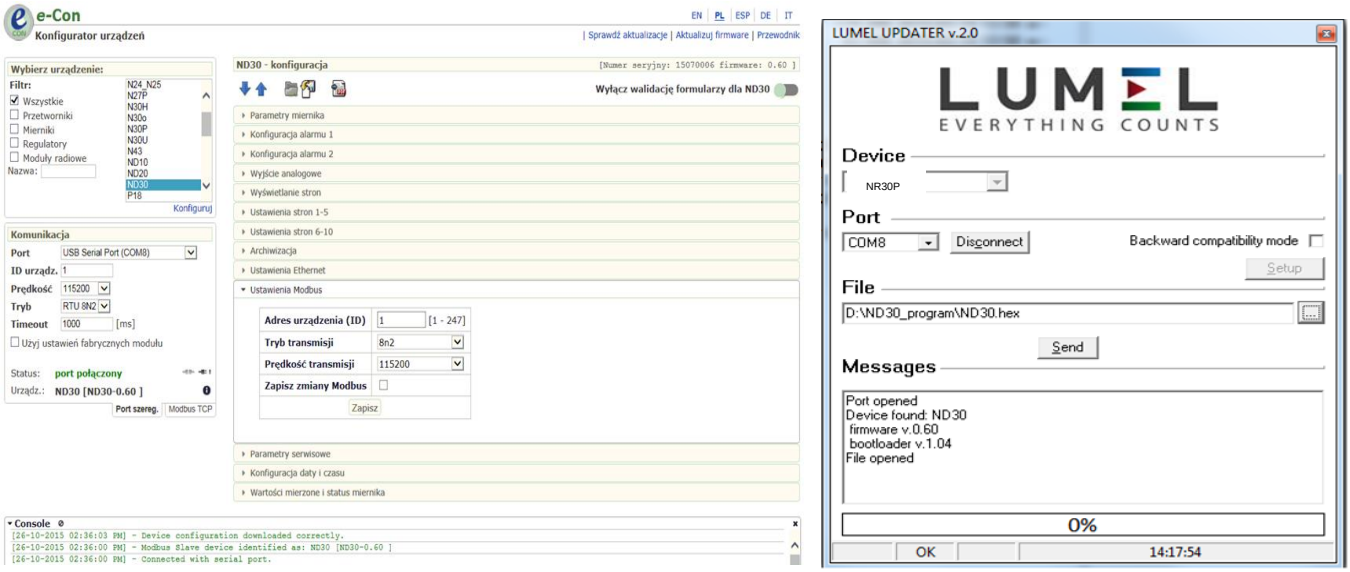

Fig.24. View of program window: a) eCon, b) firmware upgrade

Caution! After upgrading the software, the user should set the factory settings of the meter, therefore it is recommended to preserve the initial meter parameters before the upgrade with the use of eCon software.

After starting eCon the serial port, speed, mode and meter address should be set in the settings. Then select NR30PNET meter and click Configure To read all the settings, click the down arrow, then the floppy icon to save the settings to a file (to restore them later). After selecting *Update firmware* (in the upper right corner of the screen) *Lumel Updater* (LU) window will open - Fig. 24.b. Press *Connect*. *Messages* information window contains info about the progress of the upgrade process. When the port is properly opened the display shows: *Port opened*. There are two ways to enter the upgrade mode: remotely through the LU (based on settings in eCon - address, mode, speed, COM port) and by turning

on the meter power with the button  pushed (when entering the bootloader mode with the button, communication parameters: speed 9600, RTU8N2, address 1). The display will show boot with bootloader version, and LU program will show the message *Device found* and the name and program version of the connected device. Press the „*...”* button and select the meter update file. When the file is properly opened *File opened* message is displayed. Press the Send button. After successful upgrade the meter switches to normal operation, and the information window shows *Done* and the upgrade duration. After closing the LU window, go to *Service Parameters*, select *Set Meter Defaults* and press the *Restore* button. Then press the folder icon to open the previously saved settings file and press the up arrow to save the settings in the meter. The current software version can also be checked by reading the greeting messages of the meter after powering up.
Caution! Turning off the power during the software upgrade may result in permanent damage to the meter!

12 ERROR CODES

During operation of the meter, error messages may appear on the display. The causes of the errors are listed below.

Error:
MEM_FR, CAL_IN, SDCARD – displayed when the memory of the meter is corrupted. The meter must be sent to the manufacturer.
P.CFG – displayed when the operating parameters of the meter are incorrect. The factory settings must be restored (from the menu "Settings -> Set all defaults" or via RS485).
P.PAGE – displayed when the parameters related to the configuration of displayed parameters in the meter are incorrect. The factory settings should be restored (from the menu " Displaying -> Settings -> Set page defaults "or via RS485).
P.READ – displayed when the parameters related to registers from the modbus 42xx group of addresses are incorrect. The factory settings must be restored (from the menu " Modbus -> Set defaults 42xx" or via RS485).
ENERGY – displayed when an error occurs in the value in one of the energy counters of the meter. The factory settings must be restored (from the menu " Parameters -> Del energy counters" or via RS485).

– ^^^^ **–** upper exceeding. The value is measured outside the measurement range.
– vvvv **–** lower exceeding. The value is measured outside the measurement range.

13 TECHNICAL DATA

Measurement ranges and acceptable errors Table 20

Measured quantity	Measuring range	L1	L2	L3	∑	Class
Current I: 1/5 A 1 A~ 5 A~ 63 A~	0,002 ...0,100...1,200 A 0,010 ...0,500... 6.000 A 0.10 ...6.3 ... 70.00 A ...100.00 kA (tr_I≠1)	•	•	•		0.2 (EN 61557-12)
Voltage U L-N: 57.7 V~ 100 V~ 230 V~ 400 V~	5.700...11.500 ...70.000 V 11.000...20.000 ...120.00 V 23.000...46.000 ... 276.00 V 40.000...80.000 … 480.00 V ...1920.0 kV	•	•	•		0.2 (EN 61557-12)
Voltage U L-L: 100 V~ 170 V~ 400 V~ 690 V~	10.000 ...20.000...120.00 V 17.000 ...34.000...204.00 V 40.000...80.00 ... 480.00 V 69.000...138.00 ... 830.00 V ...1999.0 kV (tr_U≠1)	•	•	•		0.5 (EN 61557-12)
Active power P	-19999 MW … 0.000 W ... ...19999 MW (tr_U≠1,tr_I≠1)	•	•	•	•	0.5 (EN 61557-12)
Reactive power Q	-19999 MVar ... 0.000 Var ... ...19999 MVar (tr_U≠1,tr_I≠1)	•	•	•	•	1 (EN 61557-12)
Apparent power S	0.000 ... 1999.9 VA ... …19999 MVA (tr_U≠1,tr_I≠1)	•	•	•	•	0.5 (EN 61557-12)
Active energy EnP / imported or exported /	0.0 ... 99 999 999. 9 kWh				•	0.2S (EN 62053-22)
Reactive energy EnQ /Inductive or capacitive/	0.0 ... 99 9 999, 999 kVarh				•	1 (EN 61557-12)
Apparent energy EnS	0.0 ... 99 999 999. 9 kVAh				•	0.5 (EN 61557-12)
Active power factor PF	-1.00 ... 0 ... 1.00	•	•	•	•	1 (EN 61557-12)
tg factor	-999.99...-1.20... 0 ... 1.20…999.99	•	•	•	•	1
Frequency f	45.000 ...65.000 Hz				•	0.1 (EN 61557-12)
Total harmonic distortion of voltage THDU, and current THDI	0.0 ... 100.0 %	•	•	•	•	5 (EN 61557-12)
Amplitudes of voltage harmonics U_{h2} ...U_{h51} ,and current I_{h2} … I_{h51}	0.0 ... 100.0 %	•	•	•		II (IEC61000-4-7)

tr_I - Ratio of current transformer = Primary current of transformer / Secondary current of current transformer,
tr_U - Ratio of voltage transformer = Primary voltage of transformer / Secondary voltage of voltage transformer,

Power consumption:

- in power supply circuit ≤ 6 VA
- in voltage circuit ≤ 0.5 VA
- in current circuit ≤ 0.1 VA (1/5 A); ≤ 2.0 VA (63 A)

Readout field LCD display 20 x 4 rows; white background, black characters

Relay outputs (A1, A2) 2 programmable relays, volt free NO contacts, resistive load 0.5 A/250 V a.c. or 5 A/30 V d.c.
Number of switchings: mechanical minimum 5×10^6
electric minimum 1×10^5

RS485 serial interface Modbus RTU 8N2,8E1,8O1,8N1. Address: 1..247,
Baud rate: 4.8, 9.6, 19.2, 38.4, 57.6, 115.2 kbit/s
maximum time to commence the response: 600 ms

Ethernet/Profinet interface 10/100 Base-T, RJ45 socket, ICMP (Ping), Profinet version 2.2

Sampling	A/C converter 16-bit Sampling rate 6.4 kHz for 50 Hz 7.68 kHz for 60 Hz Simultaneous sampling across all channels, 128 samples per period
Harmonics	Harmonics series (n) 1..51 The harmonic distortion factor referred to the fundamental component of THD voltage, THD current waveform (n=2..51) 0,0 ..100.0 % FFT analysis (Fast Fourier Transform),
Real-time clock	±20 ppm, battery of real time clock CR1220

Terminals	direct connection (63A)	indirect connection (1/5A)
Cross-section		
wire	2.5 .. 16 mm²	0.2 .. 5.3 mm²
cable	4 .. 16 mm²	0.2 .. 5.3 mm²
Clamping screws	M5	M3.5
Tightening torque	1.2 .. 2.0 Nm	1.0 Nm

Degree of protection provided by housing

from the front side	IP 50
terminals	IP 00
Weight	0.3 kg
Dimensions	105 x 110 x 60 mm

Reference conditions and rated operating conditions.

- power supply	85..253 V a.c. (40..<u>50</u>..400) Hz or 90..300 V d.c. or 20..40 V a.c. or 20..60 V d.c.
- input signal:	0 .. <u>0.1..1.2I_n</u> for versions 1/5A; 0 .. <u>0,...1.1I_n</u> for versions 63A; 0.1..<u>0.2..1.2U_n</u> for current, voltage, PF_i ,tg_i frequency 45 ..<u>50</u> .. <u>60</u> .. 65 Hz; sinusoidal (THD ≤ 8%)
- power factor	<u>-1...0...1</u>
- ambient temperature	-10..<u>23</u>..+55 °C, class K55 acc. to EN61557-12
- storage temperature	-20..+70 °C
- humidity	0 .. <u>40 ..60</u> ..95 % (no condensation))
- acceptable crest factor :	
- current	2
- voltage	2
- external magnetic field	≤ <u>40</u>...400 A/m d.c. ≤ 3A /m a.c. 50/60 Hz
- short-term overload	
voltage inputs 5 sec.	2 Un
voltage inputs 1 sec.	50 A (for versions In 1 A/ 5 A)
1 sec.	630 A (for versions In 63 A)
- operation position	any

- warm-up time 15 min.

Real-time clock battery: CR1220

Additional errors:

in % of intrinsic error

- due to ambient temperature changes < 50 % / 10 °C
- for THD > 8% < 50 %

Standards met by the meter

Electromagnetic compatibility

- immunity in industrial environments EN 61000-6-2

resistance to induced common voltages of radio frequency:

- level 2 in the frequency range of 0.15 ... 1 MHz,
- level 3 in the frequency range of 1 MHz ... 80 MHz,

- noise emission acc. to EN 61000-6-4

Safety requirements:

according to PN-EN 61010-1 standard

- insulation between circuits: basic,
- installation category III for voltages up to 300V in relation to earth
- installation category II for voltages up to 600V in relation to earth
- degree of pollution 2
- maximum operating voltage relative to earth
  - for power circuits and relay outputs 300 V
  - for measurement input 500 V
  - for RS485, Ethernet circuits, analog outputs: 50 V
- altitude < 2000m

14 ORDERING CODES

Ordering code of NR30PNET meter of power network parameters.

Table 21

Meter of Power Network Parameters	**NR30PNET**	**X**	**X**	**X**	**X**	**XX**	**X**	**X**
Input current In:								
1/5 A (X/1; X/5)		1						
63 A		2						
Input voltage (phase/phase-to-phase) Un:								
3x57.7/100 V to 3x100/170 V			1					
3x230/400 V to 3x400/690 V			2					
Interfaces								
RS485 Modbus RTU and Ethernet Profinet				2				
Power supply:								
85..253 V a.c., 90..300 V d.c.					1			
20..40 V a.c., 20..60 V d.c.					2			
Version:								
standard						00		
with S4AO*: 4 current outputs 0/4 .. 20 mA						01		
with S4AO*: 4 voltage outputs 0 .. 10 V						02		
with S4AO*: 4 outputs (2 groups 1 x 0..10 V + 1 x 0/4 .. 20 mA)						03		
custom-made**						XX		
Language								
Polish/ English							M	
other**							X	
Acceptance tests:								
without additional requirements								0
with quality inspection certificate								1
with calibration certificate								2
acc. to customer's requirements**								X

* 4-channel S4AO analog output module will be made in the same power supply as the ordered NR30PNET meter, unless the customer specifies otherwise. The S4AO module communicates with the NR30PNET meter via the RS485 Modbus Master interface, therefore cooperation with S4AO excludes the use the NR30PNET meter RS485 interface for communication with another Master.

**after agreement with the manufacturer

SAMPLE ORDER, code **NR30PNET 112100M0** means:

NR30PNET – NR30PNET meter,
1 – input current 1A/5A (X/1; X/5),
1 – input voltage 3x57.7/100 V to 3x100/170 V,
2 – RS485 Modbus RTU and Ethernet Profinet,
1 – power supply 85..253 V a.c., 90..300 V d.c.
00 – standard version,
M – Polish-English language version,
0 – without additional requirements.

LUMEL

LUMEL S.A.
ul. Sulechowska 1, 65-022 Zielona Góra, Poland
tel.: +48 68 45 75 100, fax +48 68 45 75 508
www.lumel.com.pl

Export department:
tel.: (+48 68) 45 75 139, 45 75 233, 45 75 321, 45 75 386
fax.: (+48 68) 32 54 091
e-mail: export@lumel.com.pl

Calibration & Attestation:
tel.: (68) 45 75 161
e-mail: laboratorium@lumel.com.pl

NR30PNET-09A