EUROTEC
TECNOLOGIE IMPIANTISTICHE - AUTOMAZIONE - TELECONTROLLO

LUMEL
EVERYTHING COUNTS



NR30PNET

RAIL MOUNTED POWER NETWORK METER WITH PROFINET

- **Measurement of 54** power network parameters and **current and voltage harmonics up to 51st**, in 1-phase 2-wire or 3-phase 3 or 4-wire balanced and unbalanced systems.
- Backlit LCD screen **fully configurable by a user** (22 views, 3 parameters in each).
- **High accuracy class (0.2S for active energy).**
- For direct (up to 63A) and indirect measurement (x/1A or x/5A).
- Indications considering values of programmed ratios.
- Memory of minimum and maximum values.
- 2 configurable alarm outputs.
- Optional: with an additional module of analog outputs S4AO (max. 4 current or voltage outputs).
- Digital output RS-485 - MODBUS protocol.
- **Modern and user-friendly Ethernet/Profinet (version 2.2.) interface**.
- Programming of parameters **through USB** using **free eCon software.**
- Battery backup RTC.
- Modular housing for S-rail according to EN 62208 (the meter has a width of 6 modules).

EXAMPLE OF APPLICATION

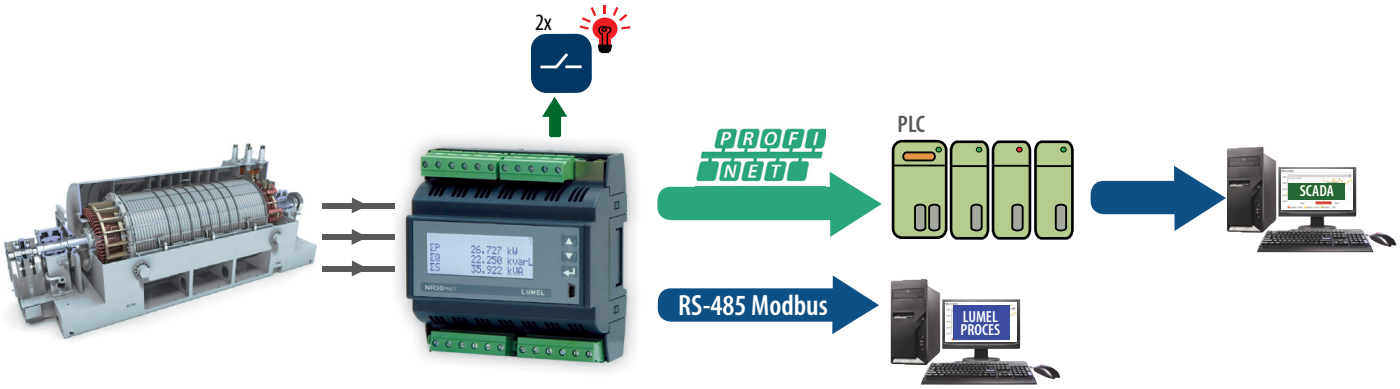

MEASUREMENT AND VISUALIZATION OF POWER NETWORK PARAMETERS

- phase voltages: U_1, U_2, U_3
- phase-to-phase voltages: U_{12}, U_{23}, U_{31}
- phase currents I_1, I_2, I_3
- active phase powers: P_1, P_2, P_3
- reactive phase powers: Q_1, Q_2, Q_3
- apparent phase powers: S_1, S_2, S_3
- active power factors: PF_1, PF_2, PF_3
- reactive/active power factors: $tg\varphi_1$, $tg\varphi_2$, $tg\varphi_3$
- active, reactive and apparent 3-phase power: P, Q, S
- mean 3-phase power factors: PF, $tg\varphi$
- frequency f
- mean 3-phase voltage: U_S
- mean phase-to-phase voltage: U_{mf}
- mean 3-phase current: I_S
- 15, 30, 60 minutes' mean active power: P_{demand}
- mean apparent power S_{demand}
- average current I_{demand}
- active, reactive and apparent 3-phase energy: EnP, EnQ, EnS
- active, reactive and apparent energy from external counter: EnPE
- total harmonic content coefficients for phase voltages and currents THD_{U1}, THD_{U2}, THD_{U3}, THD_{I1}, THD_{I2}, THD_{I3} and for 3-phase voltages and currents THD_U, THD_I
- harmonics for current and phase voltage up to 51 st!

NR30PNET - RAIL MOUNTED POWER NETWORK METER WITH PROFINET

LUMEL
EVERYTHING COUNTS

FEATURES

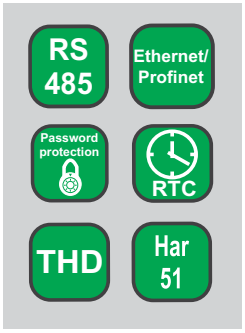

INPUTS



OUTPUTS

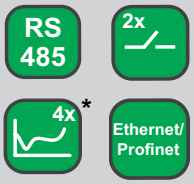

* -available only with an additional S4A0 module

GALVANIC ISOLATION

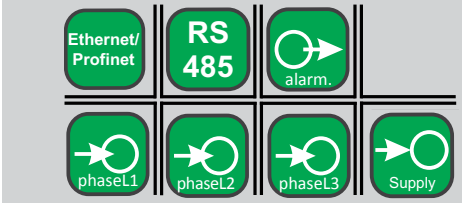

TECHNICAL DATA

MEASURING RANGES

Measured value	Measuring range	L1	L2	L3	Σ	Class
Current 1/5 A 1 A~ 5 A~	0.010 ... 0.100 ...1.200 A (tr_I=1) 0.050 ... 0.500 ... 6.000 A (tr_I=1) ...20.00 kA (tr_I≠1)	•	•	•		0.2 (EN 61557-12)
Voltage L-N 57.7 V~ 230 V~ 400 V~	5.7...11.5 ... 70.0 V (tr_U=1) 23.0... 46 ... 276.0 V (tr_U=1) 40.0...80 ... 480.0 V (tr_U=1) ...480.0 kV (tr_U≠1)	•	•	•		0.2 (EN 61557-12)
Voltage L-L 100 V~ 400 V~ 690 V~	10.0 ... 20 ...120.0 V (tr_U=1) 40.0... 80 ... 480.0 V (tr_U=1) 69.0 ...138 ... 830.0 V (tr_U=1) ...830.0 kV (tr_U≠1)	•	•	•		0.5 (EN 61557-12)
Active power P_i, average active power P_{dt}	... (-)1999.9 W ...(-)1999.9 MW (tr_U≠1.tr_I≠1)	•	•	•	•	0.5 (EN 61557-12)
Reactive power Q_i	... (-)1999.9 Var ...(-)1999.9 MVar (tr_U≠1.tr_I≠1)	•	•	•	•	1 (EN 61557-12)
Apparent power S_i, avarage apparent power S_{dt}	...1999.9 VA ...1999.9 MVA (tr_U≠1.tr_I≠1)	•	•	•	•	0.5 (EN 61557-12)
Active energy EnP (imported or exported)	... (-)1999.9 Wh ...(-)1999.9 MWh (tr_U≠1.tr_I≠1)				•	**0.2S (EN 62053-22)**
Reactive energy EnQ (inductive or capacitive)	... (-)1999.9 Varh ...(-)1999.9 MVarh (tr_U≠1.tr_I≠1)				•	1 (EN 61557-12)
Apparent energy EnS	... 1999.9 VAh ...1999.9 MVAh (tr_U≠1.tr_I≠1)				•	0.5 (EN 61557-12)
Active power factor PF_i	-1.00 ...0 ...1.00	•	•	•	•	1 (EN 61557-12)
Coefficient tg	-999.99 ... -1,20 ... 0 ... 1.20 ... 999.99	•	•	•	•	1
Frequency f	45.00 ... 65.00 Hz				•	0.1 (EN 61557-12)
Total harmonic distortion of voltage THDU and current THDI	0.0 ...100.0 %	•	•	•	•	5 (EN 61557-12)
Amplitudes of the voltage U_{h1} ...U_{h50}, and current I_{h1} ... I_{h50}	0.0 ...100.0 %	•	•	•		II (IEC61000-4-7)

tr_I - Ratio of current transformer = Primary current of transformer / Secondary current of current transformer,
tr_U - Ratio of voltage transformer = Primary voltage of transformer / Secondary voltage of voltage transformer,

OUTPUTS

Output type	Properties
Relay output	2 x programmable relays, non-voltage contacts, load capacity 0.5 A / 250 V a.c. or 5 A / 30 V d.c.

DIGITAL INTERFACE

Interface type	Transmission protocol		Remarks
USB 1.1/2.0	Modbus RTU 8N2		baud rate115.2 kbit/s; firmware update
RS-485	Modbus RTU 8N2, 8E1, 8O1, 8N1	Address 1..247	baud rate: 4.8, 9.6, 19.2 38.4, 57.6, 115.2 kbit/s
Ethernet / Profinet	ICMP (Ping) / Profinet version 2.2		

EXTERNAL FEATURES

Readout field	20 x 4 lines LCD character display; white background, black characters	
Overall dimensions	105 x 110 x 60 mm	
Weight	0.3 kg	
Protection grade	from frontal side: IP50	from terminal side: IP00

RATED OPERATING CONDITIONS

Supply voltage	⎓ 85...253 V a.c. (40...50...400 Hz), 90...300 V d.c. or 20...40 V a.c., 20...60 V d.c.	power consumption ≤ 6 VA
Power consumption	in voltage circuit ≤ 0.5 VA	in current circuit ≤ 0.1 VA (In = 1/5 A); ≤ 2.0 VA (In = 63 A)
Input signal	0...0,1...1,2 In; 0,1...0,2...1,2 Un for current, voltage, PF_i, $tg\varphi_i$	frequency 45...50...60...65 Hz, sinusoidal (THD ≤ 8%)
Power factor	-1...0...1	
Preheating time	5 min.	
Ambient temperature	-10...23...55°C, class K55 acc. to EN61557-12	
Humidity	0...40...65...95%	inadmissible condensation
Operating position	any	
External magnetic field	≤ 40...400 A/m d.c.	≤ 3 A/m a.c. 50/60 Hz
Short-term overload	voltage input: 2 Un (5 sec.)	current input: 50 A for In = 1A/5A (1 sec.) 630 A for In = 63A (1 sec.)
Admissible crest factor	current: 2	voltage: 2
Additional error (in % of the intrinsic error)		from ambient temperature change: < 50% / 10°C

SAFETY AND COMPABILITY REQUIREMENTS

Electromagnetic compatibility	noise immunity	acc. to EN 61000-6-2
	noise emissions	acc. to EN 61000-6-4
Isolation insured by the casing	double	acc. to EN 61010-1
Isolation between circuits	basic	acc. to EN 61010-1
Polution level	2	acc. to EN 61010-1
Installation category	III	acc. to EN 61010-1
Maximal phase-to-earth voltage	• for supply circuit and relay outputs 300 V • for measuring input 500 V • for circuits of RS-485, analog outputs: 50 V	acc. to EN 61010-1
Altitude a.s.l.	< 2000 m	

NR30PNET - RAIL MOUNTED POWER NETWORK METER WITH PROFINET

CONNECTION DIAGRAMS

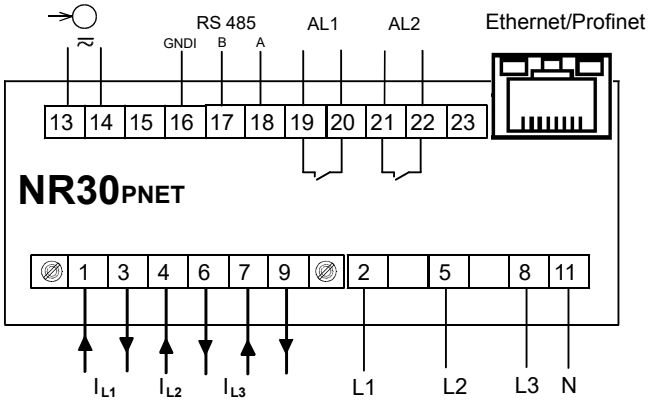

Description of connection strips in the execution of the meter for indirect connections

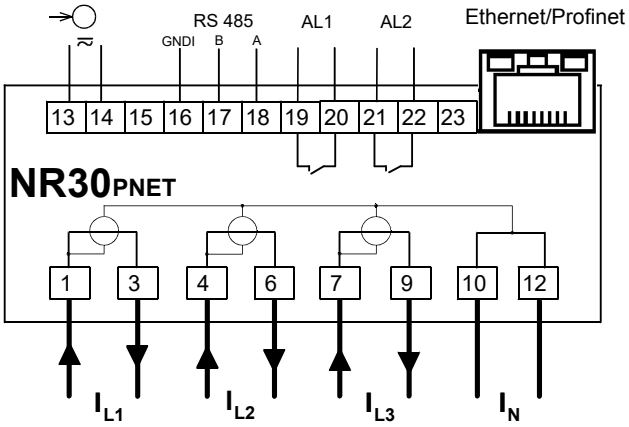

Description of connection strips in the execution of the meter for direct connections 63A

DISPLAING OF MEASUREMENT PARAMETERS

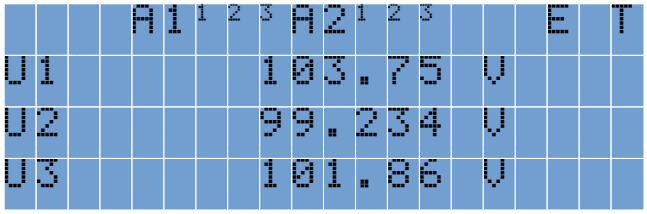

up to 22 programmable screens (3 parameters per page)

easy to use and intuitive menu; information bar with status of: min.max values, phase sequence and interfaces

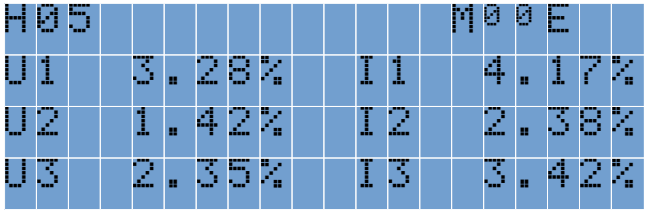

one screen dedicated to harmonics; indication of individual harmonic for voltages and currents (up to 51st)

METER CONFIGURATION WITH FREE eCON SOFTWARE

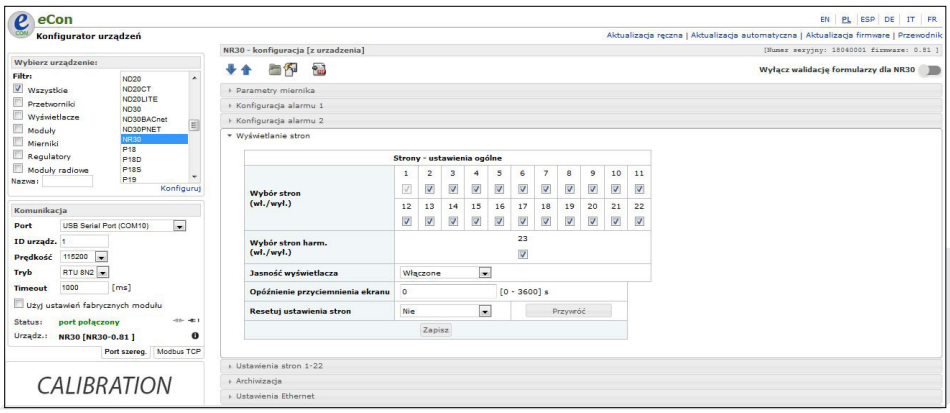

ability to configure and update* NR30PNET with free **eCon** software (via RS-485, USB)

*- update only via USB port

NR30PNET - RAIL MOUNTED POWER NETWORK METER WITH PROFINET

LUMEL EVERYTHING COUNTS

ORDERING CODE

Meter NR30PNET	X	X	X	X	XX	X	X
Input current In:							
1/5 A (X/1 ; X/5)	1						
63 A	2						
Input voltage (phase/phase-to-phase) Un:							
3 x 57.7/ 100 V up to 3 x 100/ 170 V		1					
3 x 230/ 400 V up to 3 x 400/ 690 V		2					
Interface:							
RS-485 Modbus RTU and Ethernet/ Profinet			2				
Supply:							
85...253 V a.c., 90...300 V d.c.				1			
20...40 V a.c., 20...60 V d.c.				2			
Version:							
standard					00		
with S4AO*: 4 current outputs 0/4 .. 20 mA					01		
with S4AO*: 4 voltage outputs 0 .. 10 V					02		
with S4AO*: 4 outputs (2 groups 1 x 0..10 V + 1 x 0/4 .. 20 mA)					03		
custom-made**					XX		
Language:							
Polish/ English						M	
other**						X	
Acceptance tests:							
without additional quality requirements							0
with an extra quality inspection certificate							1
with calibration certificate							2
acc.to customer's request							X

Order example:

The code: **NR30PNET 112100M0** means:

NR30PNET - NR30PNET meter
1 – input current 1/5 A (X/1; X/5)
1 – input voltage 3x57.7/100 V up to 3x100/170 V,
2 – RS485 Modbus RTU and Ethernet/ Profinet,
1 – supply 85..253 V a.c., 90..300 V d.c.
00 – standard version,
M – Polish/English language version,
0 – without additional quality requirements.

* 4-channel S4AO analog output module will be made with the same power supply as the ordered NR30PNET meter, unless the customer specifies otherwise. The S4AO module communicates with the NR30PNET meter via the RS485 Modbus Master interface, therefore cooperation with S4AO excludes the use the NR30PNET meter RS485 interface for communication with another Master.

**after agreement with the manufacturer

Castel Maggiore (BO) 40013
Via Lirone 60/i

e-mail: info@eurotecsrl.com
Tel: +39 051/6321595
Website: www.eurotecsrl.com

C.F.: 04103780377
P.I.: 01596581205

LUMEL EVERYTHING COUNTS