EUROTEC
TECNOLOGIE IMPIANTISTICHE - AUTOMAZIONE - TELECONTROLLO

LUMEL

RAIL MOUNTED POWER NETWORK METER
NR30BAC

USER'S MANUAL

CE

Contents

1 APPLICATION 2
2 METER SET 2
3 BASIC REQUIREMENTS, OPERATIONAL SAFETY 2
4 INSTALLATION 3
5 DESCRIPTION 3
5.1 Current inputs 3
5.2 Voltage inputs 3
5.3 Connection of the meter 4
5.4 External connections diagram 5
6 COOPERATION WITH S4AO 8
7 NR30BAC PROGRAMMING 9
7.1 Frontal panel 9
7.2 Messages after Switching the Supply on 10
7.3 Starting operation 10
7.4 Language selection 11
8 OPERATING MODES 11
8.1 Measurement mode 13
8.1.1 Measurement of voltage and current harmonics 13
8.2 Parameters mode 14
8.3 Alarm mode 15
8.4 Display mode 18
8.5 Ethernet/ BACnet IP mode 23
8.6 Modbus mode 24
8.7 Settings mode 24
8.8 Information mode 25
9 SERIAL INTERFACES 26
9.1 Ethernet/ BACnet IP INTERFACE 26
9.2 Ethernet /BACnet IP interface connection 27
9.3 RS485 INTERFACE – the list of parameters 28
9.4 Examples of registers reading and saving 28
10 METER DATA STRUCTURE 31
10.1 Data structure for the Ethernet / BACnet IP interface 31
10.2 Register structure for RS485 / Modbus interface 35
11 FIRMWARE UPGRADE 62
11. 1 Firmware upgrade - the main program of the meter 62
12 ERROR CODES 63
13 TECHNICAL DATA 63
14 ORDERING CODES 66

1 APPLICATION

NR30BAC meter is a digital programmable instrument designed to measure network parameters of single-phase 2-wire and three-phase 3 and 4-wire balanced and unbalanced systems. The measured values are displayed on a 20 x 4 LCD character display. The meter enables controlling and optimizing the operation of power electronics devices, systems and industrial installations.
It provides measurement of: RMS voltage and current, active, reactive and apparent power, active, reactive and apparent energy, power factors, frequency, harmonic currents and voltages / up to 51st /, THD of current and voltage, average active and apparent power, P Demand, S Demand, averaged current I Demand /15, 30 or 60 minutes/. Voltages and currents are multiplied by given voltage and current ratios of measuring transformers / for indirect connections /. Indications of power and energy take into consideration values of programmed ratios. The values of the measured quantities can be transmitted to the host system through RS485 interface or Ethernet interface, relay outputs signal overruns of the selected parameters.

The meter has a galvanic separation between the individual blocks of:

- power supply,
- voltage inputs,
- current inputs (for versions In 1 A/ 5 A),
- RS485 Interface,
- Ethernet/ BACnet IP Interface:
- alarm outputs,

2 METER SET

Complete set of the Analyzer includes:

1. NR30BAC meter	1 pc.
2. User’s manual	1 pc.

3 BASIC REQUIREMENTS, OPERATIONAL SAFETY

In terms of operational safety, the meter meets the requirements of DIN EN 61010-1.

Safety instructions:

- The meter installation and connection should be made by qualified personnel. All available protection requirements must be taken into consideration.
- Before turning the meter on verify the connections.
- Prior to removing the meter housing, always turn the supply off and disconnect the measurement circuits.
- Removal of the meter housing during the warranty period voids the warranty.
- The meter meets the requirements for electromagnetic compatibility in industrial environment.
- A switch or a circuit-breaker should be installed in the building or facility. It should be located near the device, easily accessible to the operator, and suitably marked.

4 INSTALLATION

The meter is adapted for installation in a modular installation switchgears on a 35 mm support rail. The housing of the meter is made of plastic.

Housing dimensions are 105 x 110 x 60 mm. Outside the meter there are screw terminal strips that allow connection of external wires with a cross-section up to 5.3 mm^2 / indirect measurements/ and up to 16 mm^2 /direct measurements.

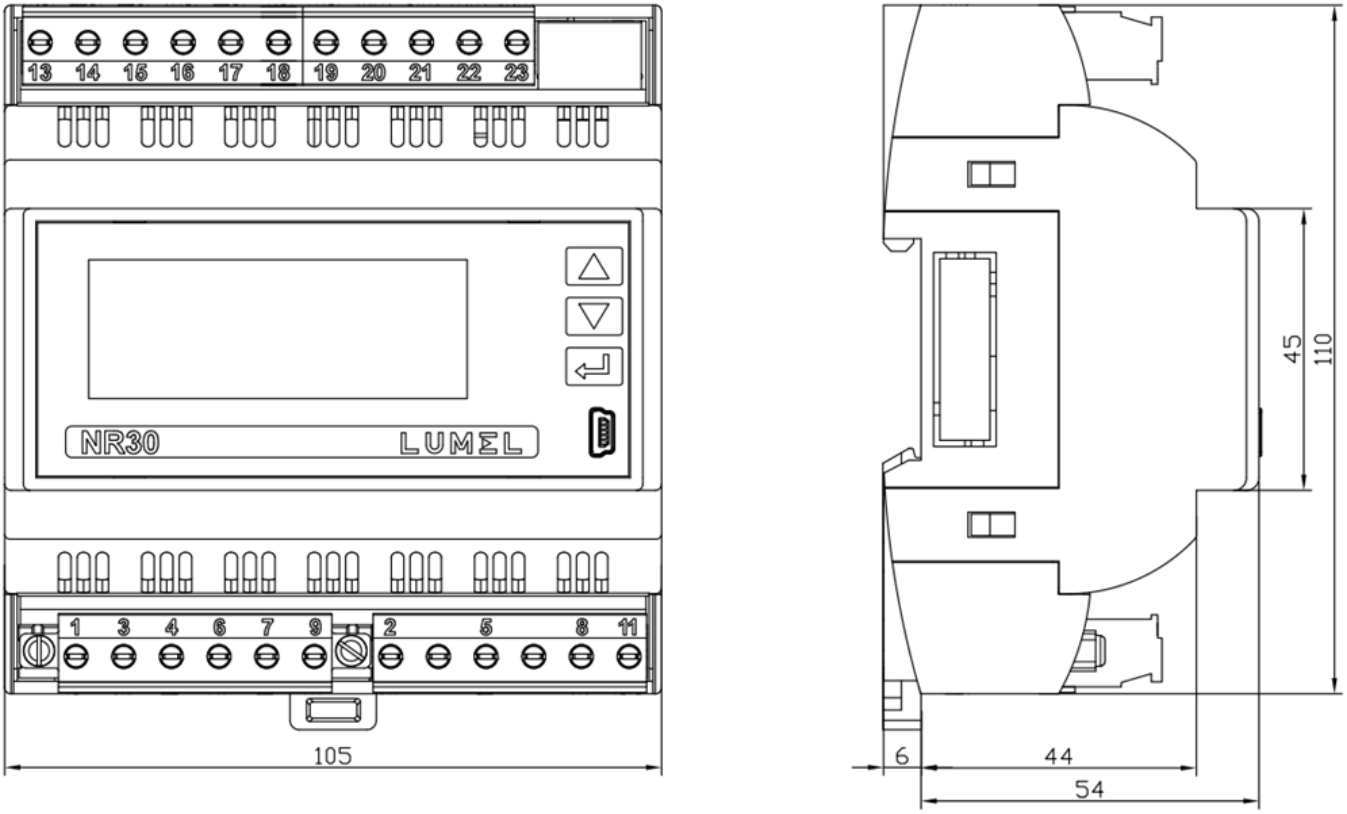

Fig.1. Overall dimensions of NR30BAC meter

5 DESCRIPTION

5.1 *Current inputs*

All current inputs are galvanically isolated (internal current transformers). The meter is adapted for direct connections / up to 63 A / or for use with external current transformers / 1 A or 5 A /. Displayed values of currents and derivative quantities are automatically converted according to the introduced external current transformer ratio.

5.2 *Voltage inputs*

Quantities at voltage inputs are automatically calculated by the amount of introduced ratio of the external voltage transformer. Voltage inputs are defined in the order as 3x57.7/100 V up to 3x100/170 V or 3x230/400 V up to 3x400/690 V.

5.3 Connection of the meter

Description of the meter external terminals is shown in Fig 2.

a)

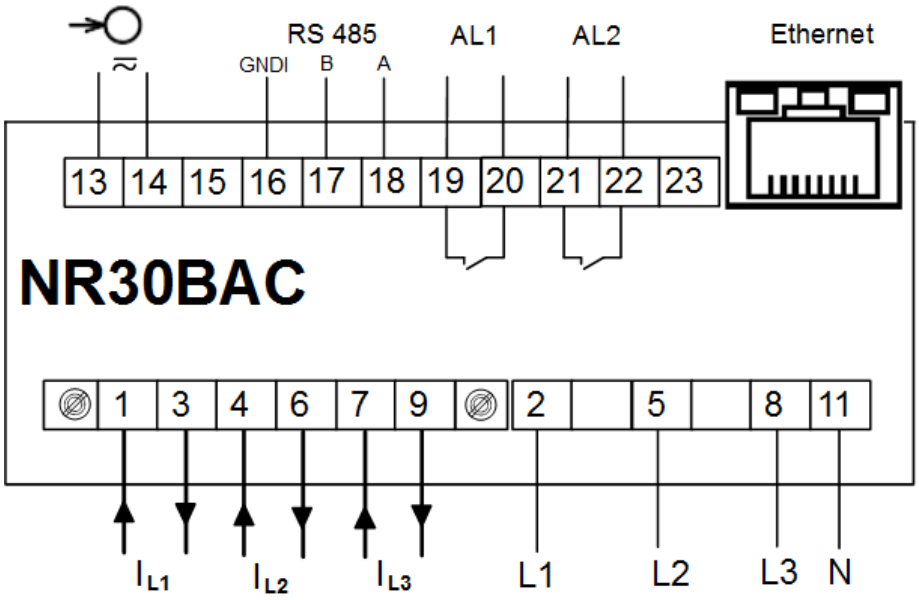

b)

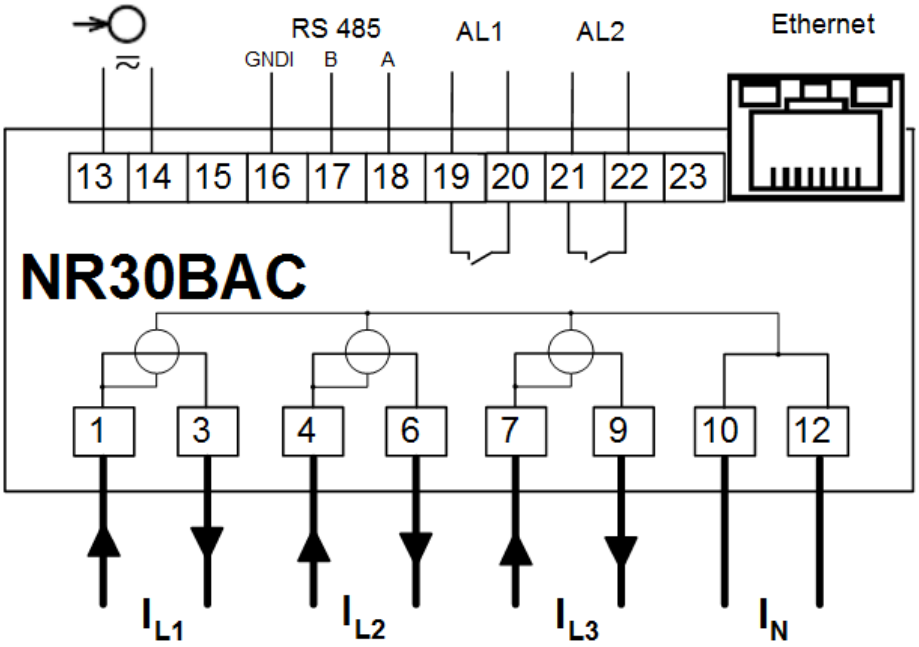

Fig.2. Connection of the meter: a) in the version for indirect connections (1 / 5 A)

b) in the version for direct connections (63 A)

5.4 External connections diagram

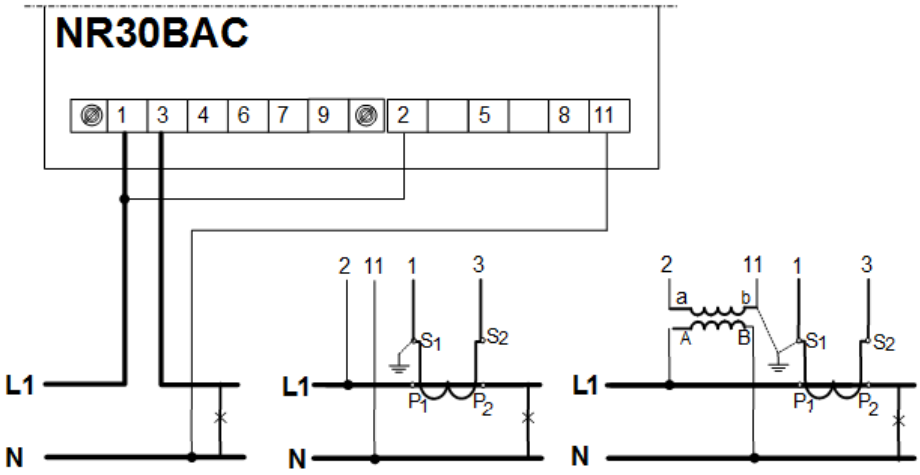

Fig.3. Direct, semi-direct and indirect measurement in 1-phase network

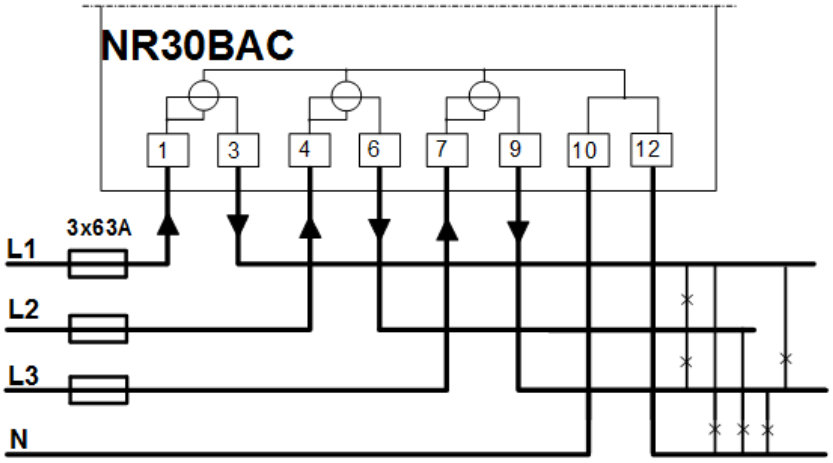

Fig.4. Direct measurement in 4-wire network version 63 A

Direct measurement
in 4-wire network

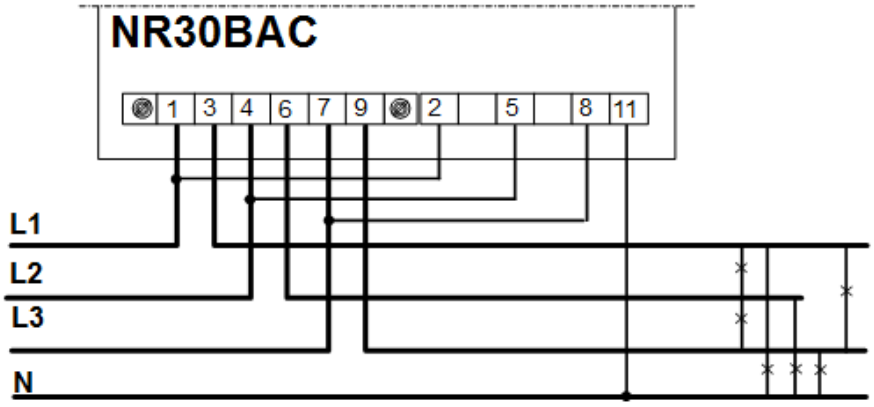

Semi-indirect measurement
in 4-wire network

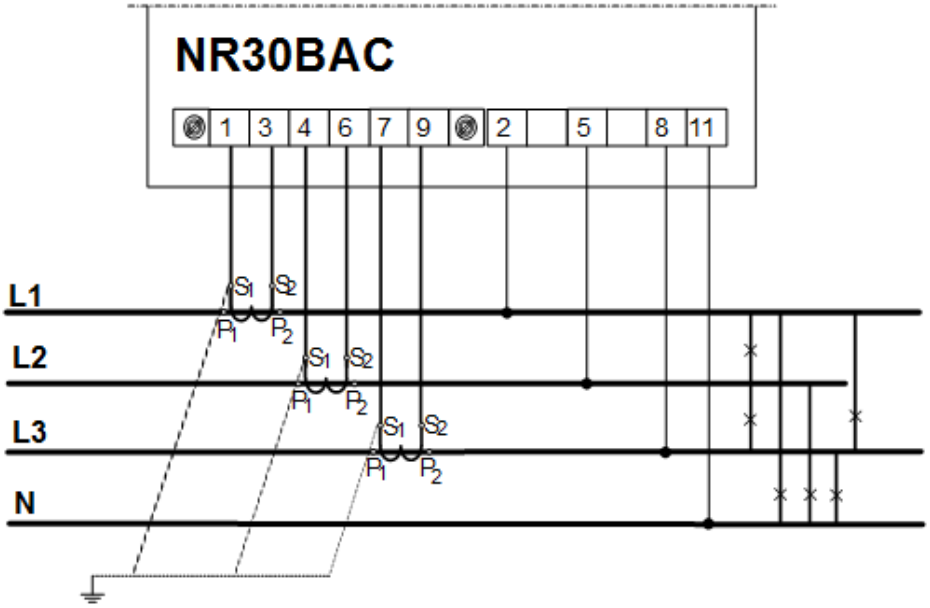

Indirect measurement
in 4-wire network

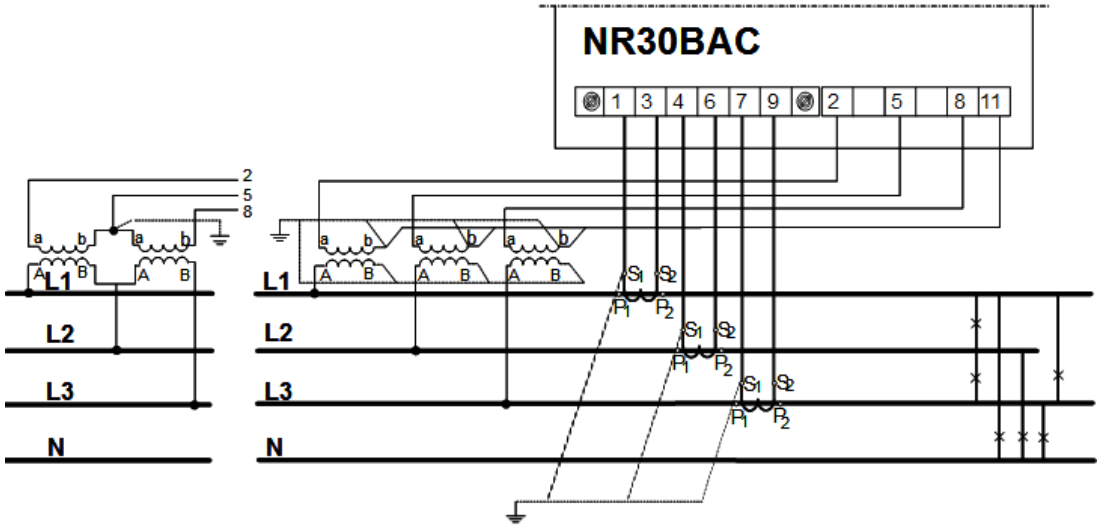

Fig.5. Input signal connection in 3-phase 4 - wire network

Direct measurement in 3 - wire network

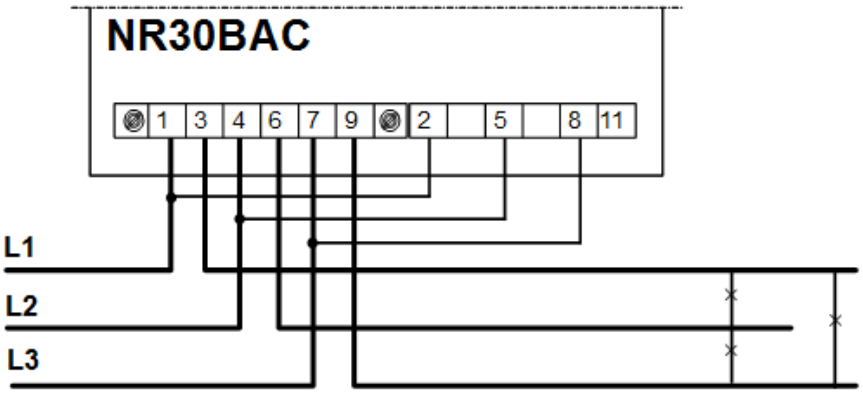

Semi-direct measurement using 2 current transformers in 3 - wire network.

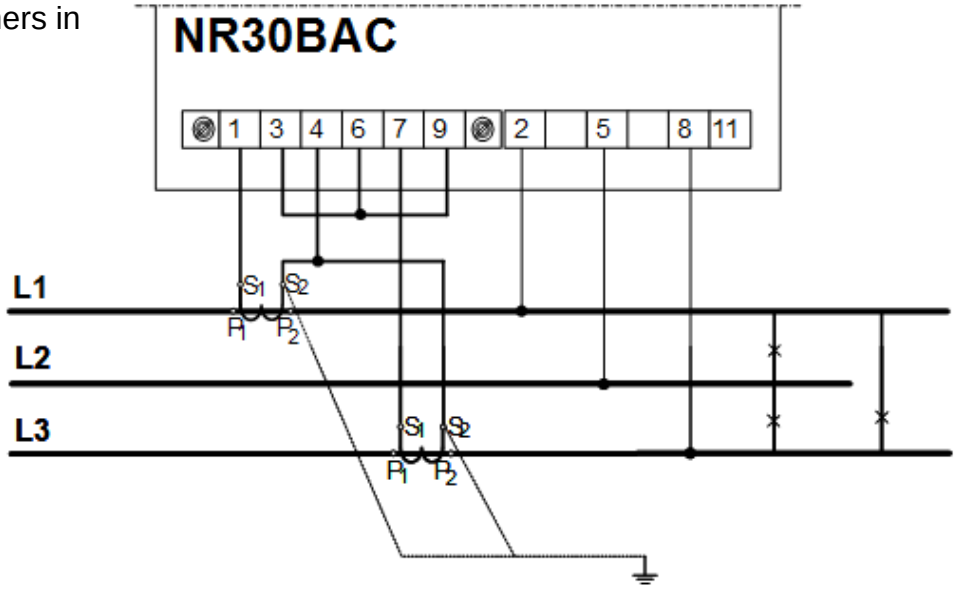

Indirect measurement using 2 current transformers and 2 or 3 voltage transformers in 3 - wire network.

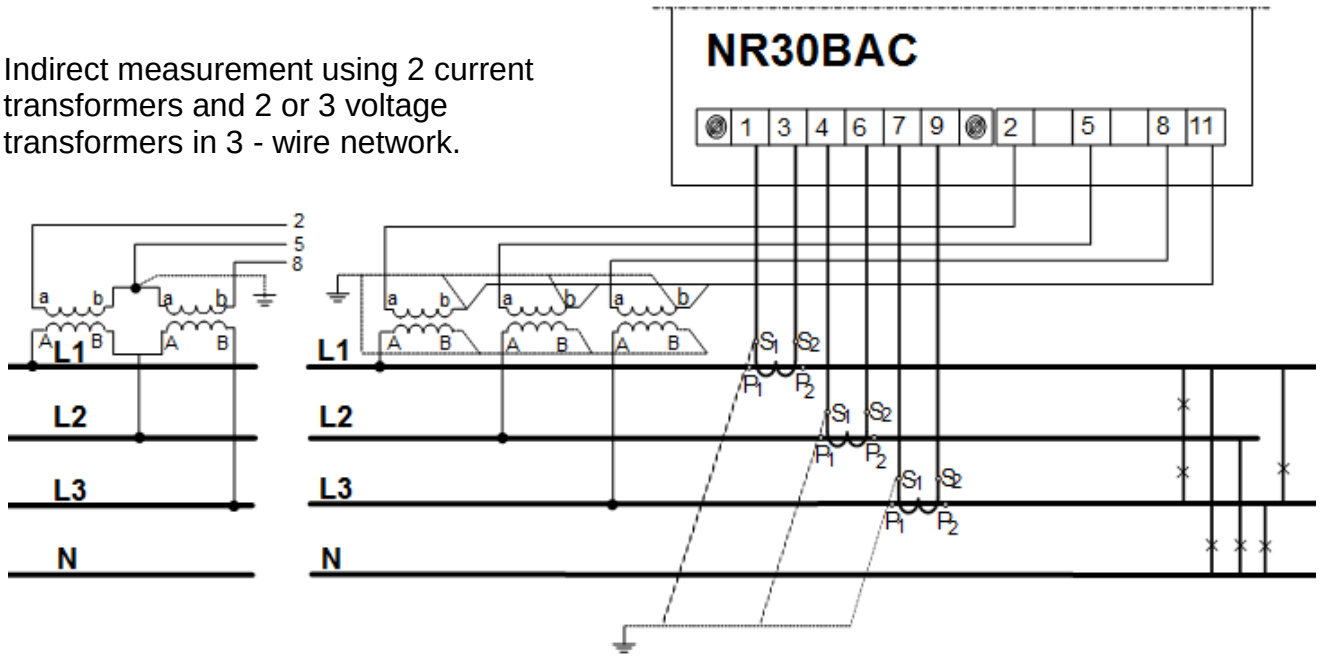

Fig.6. Input signal connection in 3-phase 3 - wire network

6 COOPERATION WITH S4AO

For NR30BAC versions with the S4AO block of 4 analog outputs, side connector for connecting blocks is included. The connector can also be ordered separately: order code 24-171-01-00016

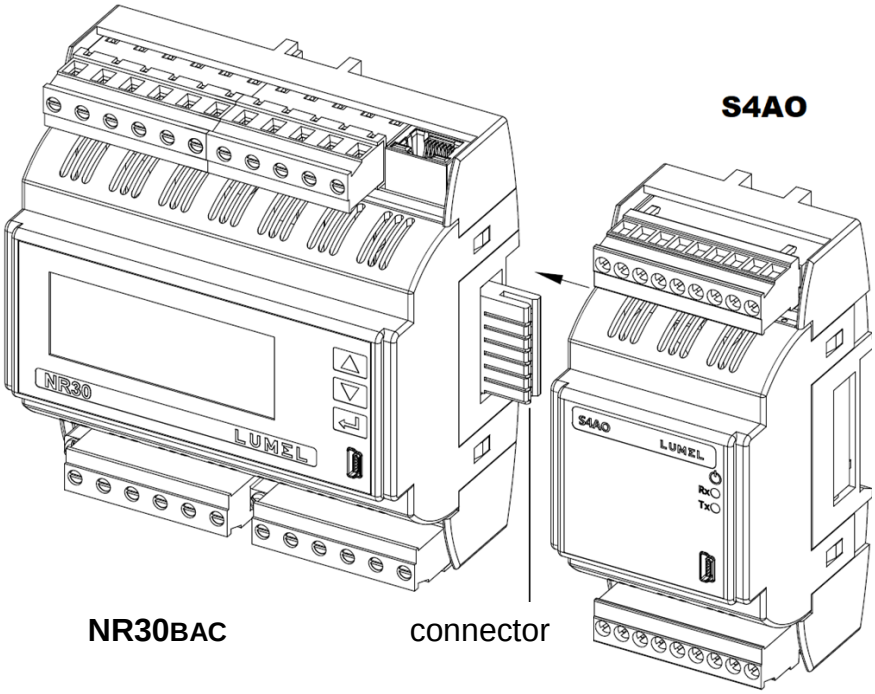

Fig.7. Connecting blocks using the side connector

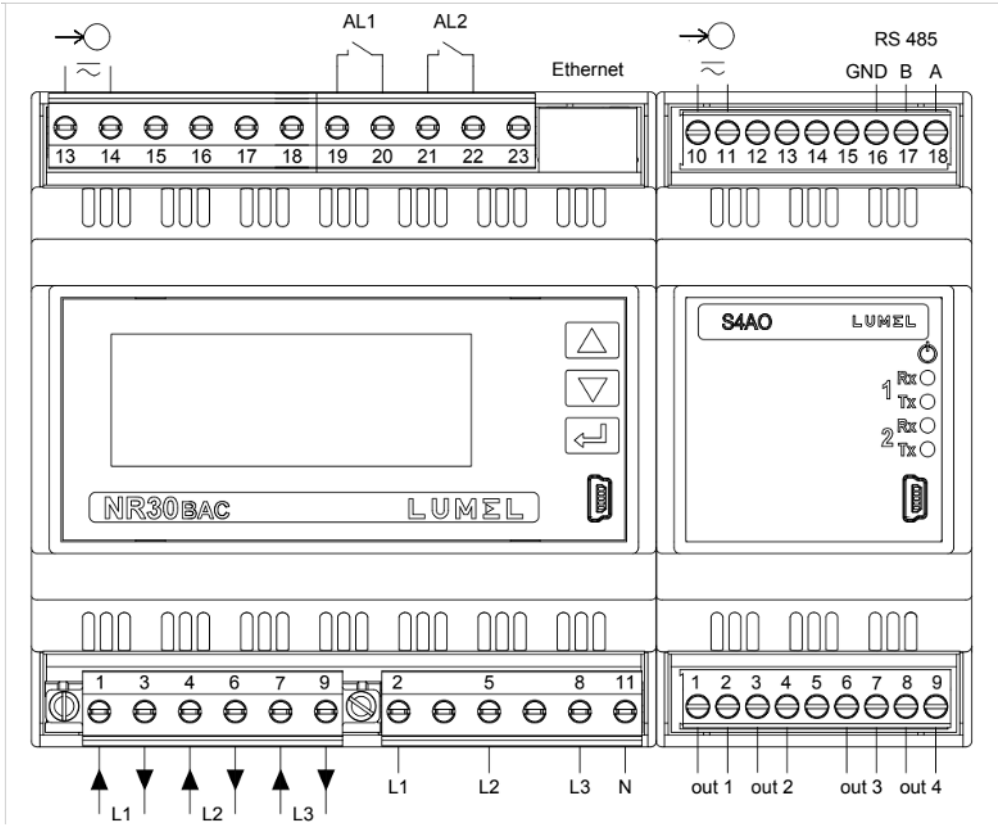

Fig.8. Connection of NR30BAC with S4AO using RS485 interface

The S4AO module communicates with the NR30BAC meter via the RS485 Modbus Master interface, therefore cooperation with S4AO excludes the use the NR30BAC meter RS485 interface for communication with another Master.

7 NR30BAC PROGRAMMING

7.1 Frontal panel

Fig.9. Frontal panel

NR30BAC meter has 3 buttons and a 20 x 4 LCD character display.
Description of the frontal panel:

▲	value increase key and moving up
▼	button to decrease the value and moving down
↵	accept key
	USB socket

V,A,W,var, VA, Wh, varh, Hz,	units of displayed quantities	k, M, G	kilo = 10^3, Mega = 10^6, Giga = 10^9
U1,I1, P1, ...EnQ	Indications of displayed parameters	L, C	markers of the type of load inductive, capacitive

The values of measured parameters are presented on active pages selected by subsequent pressing of the buttons ▲ (next page) or ▼ (previous page).
Page size is determined by any 3 quantities selected from Table 1 and displayed on the screen. Defining pages is described under **Displaying** mode.

The information bar at the top of the screen shows the status of the alarm outputs, alarm conditions. There is also an Ethernet connection symbol on the information bar, indicators of receiving and transmitting data to the RS485 line. In the case of reverse phase sequence, the symbol "!" flashes. When displaying the minimum, maximum or harmonic values, the corresponding information appears.

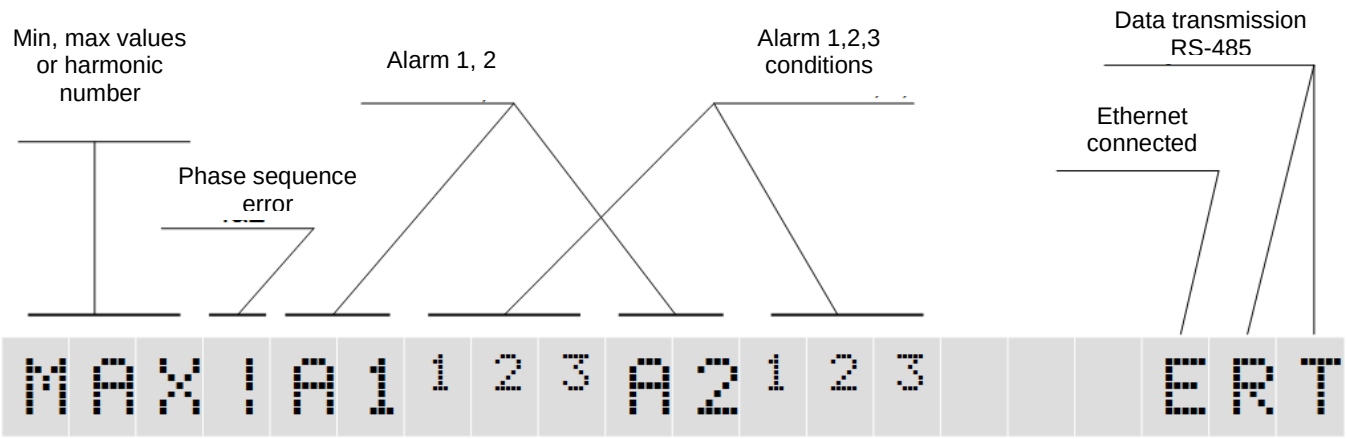

Fig.10. Information bar

Symbol	Information
MIN MAX	Pressing the button displays the minimum, maximum or current value (no symbol) of the displayed quantity.
!	If voltage signals are connected in reverse sequence, the symbol indicating the phase sequence error flashes.
A1, A2	Status of alarm outputs. In the event of an alarm (s), the corresponding symbols are displayed.
1 2 3	Signaling of meeting the alarm conditions
E	Ethernet connection symbol
R T	Indicator of receiving and transmitting data to the RS485 line

7.2 Messages after Switching the Supply on

7.3 Starting operation

When power is turned on, the meter displays the logo, NR30BAC meter name, version, current firmware version and MAC for versions with Ethernet, and then switches to measurement mode displaying the page which was set as the last one. Displayed information:

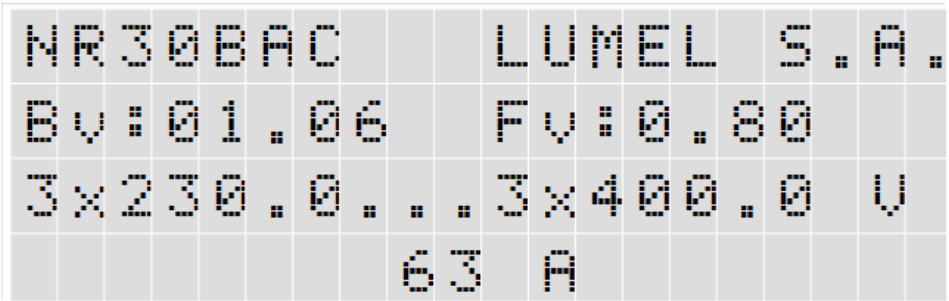

Fig.11. Welcome screen

NR30BAC – meter type, brand

Bv:01.06 – bootloader version no., Fv:0.80 – firmware version no.

U: 3x230.0...3x400.0 V – voltage versions

63 A – current versions

7.4 Language selection

The preset language is English. To select a different language, press and hold the button ↵ for about 10 seconds. The language selection menu will then appear. The language selection is made with the ▲ or ▼ buttons and then confirmed again by pressing the accept button.

8 OPERATING MODES

The NR30BAC meter has 9 operating modes:

Measurement – normal operation mode. The values of quantities are displayed according to pre-programmed pages or pages configured by the user in the Displaying mode.

Parameters – configuration of parameters of the meter,

Alarms – alarm configuration Alarm 1, Alarm 2,

Displaying – configuration of displayed pages,

Ethernet – configuration of Ethernet interface parameters,

Modbus – configuration of RS485 interface parameters,

Settings – settings: password, language, time, date,

Information – preview of program version, serial no., MAC address,

To enter from the **Measurement** mode into any mode, press and hold the ↵ button for about 3 seconds.

Use buttons ▲ ▼ to select the appropriate mode and accept with ↵

Return to the measuring mode is done by pressing at the same time ▲ ▼

Parametrs	Connection wire 3Ph-4W 3Ph-3W 1Ph-2W	Current range 1 A 5 A	Voltage L - N 057.7	Voltage L - L 100.0	VT primary 0000100	VT secondary 00100.0	CT primary 00005	CT secondary 00005	Demand integ. time 15 min 30 min 60 min	AVG synchronization none with RTC
	Volt. Connector 2 U1 U2 U3	Volt. connector 5 U1 U2 U3	Volt. Connector 8 U1 U2 U3	Curr connector 1-3 I1 -I1 I2 -I2 I3 -I3	Curr connector 4-6 I1 -I1 I2 -I2 I3 -I3	Curr connector 7-9 I1 -I1 I2 -I2 I3 -I3	Del energy counters No active reactive apparent all	Del demand values No Yes	Set defaults No Yes	
Alarms **Alarm 1** **Alarm 2**	**Settings**	Logical conditions C1 C1 v C2 v C3 C1 ∧ C2 ∧ C3 (C1 ∧ C2) v C3 (C1 v C2) ∧ C3	RLY state if AL on. off. on	Holdback alarm off off on	Disp. alarm event off on.	Set AL defaults No Yes				
	Condition C1 **Condition C2** **Condition C3**	Values U1 I1 P1 Q1 : gg:mm	Condition type n_on noFF on oFF H_on : 3_oF	Lo limit condition[%] +0099.0	Hi limit condition [%] +0101.0	Delay condition on [s] 0000	Delay condition off [s] 0000	Hldbk cond. off->on [s] 0000	Display cond. event off On	

Fig.12a. Programming matrix

Displaying	**Settings**	Backlight off on	Backlight off time [s] 0000	Pages cfg 22 / 23 Page 1 Page 2 Page 3 : Page 23	Set page defaults No Yes
	Page 1 : **Page 22**	...\Page 1 Display field 1 Display field 2 Display field. 3	...\Display field 1 Off U1 I1 P1 : En S		
		...\Page 23 H03 U1 % I1 % U2 % I2 % U3 % I3 %			

Fig.12b. Programming matrix

Ethernet / BACnet IP	**Adresses**	DHCP Off On	Mode Auto 10 Mb/s 100 Mb/s	IP address 000.000.000.000	Subnet Mask 000.000.000.000	Gateway Address 000.000.000.000	DNS Address 008.008.008.008	MAC address aa.bb.cc.00:21:01
				Obtained from DHCP or entered manually when DHCP disabled				
	Device ID	Instance number 99999	Device name NR30BAC					

Fig.12c. Programming matrix

Modbus	Address 001	Baud rate 4800 b/s 9600 b/s 19.3 kb/s 38.4 kb/s 57.6 kb/s 115.2 kb/s	Mode RTU 8N2 RTU 8N1 RTU 801 RTU 8N1	Set 42xx defaults No Yes							
Settings	Password ****	Language English Polski Deutsch	Time 13.47	Date 15/05/2018	Set all defaults No Yes						
Informa-tion	Type NR30BAC	Order code 1121	Boot Ver-sion 1.06	Program Version 0.80	Serial number 18040001	MAC address aa.bb.cc.00:21:01	DHCP On Off	IP address 000.000.000.000	Subnet mask 255.255.255.000	Gateway Address 000.000.000.000	DNS address
								Obtained from DHCP or entered manually when DHCP disabled			

Fig.12d. Programming matrix

8.1 Measurement mode

In the **Measurement** mode, the values of quantities are displayed acc. to the pre-programmed or user-configured pages in the **Displaying** mode.

The change of the page is done by pressing ▲ (next page) or ▼ button (previous page). Pressing the ↵ button displays the minimum, maximum or current value (no symbol) of the displayed quantity. Resetting minimum values is done by brief pressing the ↵ button, and then ▼; resetting maximum values by pressing respectively ↵ and ▲.

When displaying inductive or capacitive reactive power or energy, a marker is displayed that indicates the nature of the load ”L” at inductive load or “C” at capacitive load.
When displaying active energy, the "+" sign displays active energy import or "-" active energy export.
Exceeding the upper or lower indication range is indicated on the display by ^^^^ or vvvv. When measuring averaged values (P DMD, S DMD, I DMD) single measurements are done with a 0.25 second quantum. Averaging time can be chosen: 15, 30 or 60 minutes. Until the time all averaged samples are obtained, the values are calculated from already measured samples.
The current in the neutral wire IN is calculated from phase current vectors.

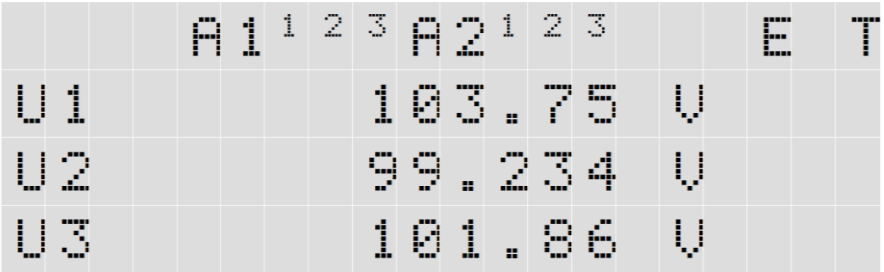

Fig.13. Screen of the measuring mode of the meter

8.1.1 Measurement of voltage and current harmonics

The choice of harmonics is made by selecting page 23 dedicated to displaying harmonic values of voltages U1, U2, U3 and currents I1, I2, I3 simultaneously for 3-phases. The number of the displayed harmonic can be changed in the range 2..51 after pressing the button ↵ and then ▲ or ▼.

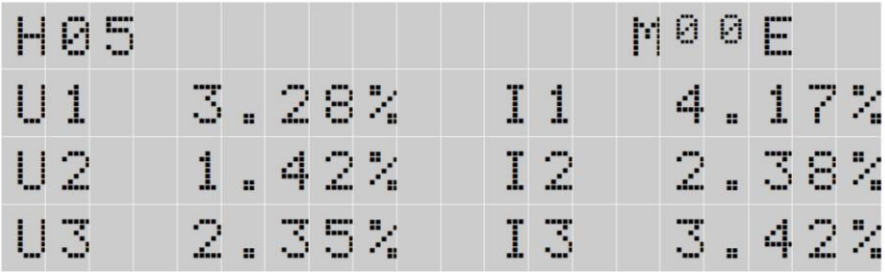

Fig.14 Screen 23 - visualization of harmonics

8.2 Parameters mode

Fig.15. Screen for selecting Parameters mode

This mode is used to set the meter parameters. To enter the Parameters mode, press the button for approx. 3 seconds, and then press the or select the Parameters mode and accept with the button . Access to configuration of parameters is protected by password, if it has been introduced and is different from zero. When the password is 0000, the password prompt is bypassed. If the password is incorrect, the message "Incorrect password" is displayed. Read-only menu." is displayed. Then you can view the parameters, but the changes are blocked.

When the password is valid or not entered, we can set values according to Table 1.

Using we select a parameter and confirm using the button . Then using we select the parameter feature or the desired parameter values are set. The active position is indicated by the cursor .The selected characteristic or value of the parameter should be confirmed by pressing the button or canceled by simultaneous pressing . To exit the Parameter procedure, press the button or wait for about 120 seconds. Exit the Parameters selection menu after pressing the button again or, after waiting for about 120 seconds.

Table 1

No.	Parameter name	Characteristic / value	Description	Default value
1	Connection wire	3Ph-4W 3Ph-3W 1Ph-2W	Network type 3 phase 4 wire 3 phase 3 wire 1 phase 2 wire	3Ph-4W
2	Current range	1A, 5A	Input range:1A or 5A	5A
3	Voltage L-N	57.7 .. 100.0 V; or 230.0 .. 400.0 V;	Phase input voltage	57.7 V or 230.0 V
4	Voltage L-L	100.0 .. 170.0 V; or 400.0 .. 690.0 V;	Phase-to-phase input voltage	100.0 or 400.0
5	VT primary	1 .. 1245183 V	Primary voltage of transformer	100
6	VT secondary	0.1 .. 01000.0	Secondary voltage of transformer	100.0
7	CT primary	1…20000	Primary current of transformer	5
8	CT secondary	1...1000	Secondary current of transformer	5
9	Demand integ. time	15 min, 30 min, 60 min	Averaging time of active power P DMD, of apparent power S DMD, of current I Demand	15 min
10	AVG synchronization	none, with RTC	Averaging synchronized with real time clock	none
11	Volt. Connector 2	U1, U2, U3		U1
12	Volt. Connector 5	U1, U2, U3		U2
13	Volt. Connector 8	U1, U2, U3		U3
14	Curr connector 1-3	I1,-I1,I2,-I2,I3,-I3		I1
15	Curr connector 4-6	I1,-I1,I2,-I2,I3,-I3		I2
16	Curr connector 7-9	I1,-I1,I2,-I2,I3,-I3		I3

17	Del energy counters	No, active, reactive, apparent, all	Resetting watt-hour meters	No
18	Del demand values	No, Yes	Resetting averaged values	No
19	Set defaults param	No, Yes	Default settings of parameters	No

- During a parameter change, it is checked whether the value is within the range. In the case of setting the value out of range, the value is set to the maximum value (when the value is too high) or to the minimum value (when the value is too low).
- When changing the parameter "Voltage L - N", the parameter "Voltage L - L" is automatically converted (x √3), when changing the parameter "Voltage L - L", the parameter "Voltage L - N" is automatically converted (x √3),
- For the configuration of NR30BAC meters you can also use our free eCon software available at www.lumel.com.pl.

8.3 Alarm mode

Select the **Alarms** mode in options and approve the choice by pressing .

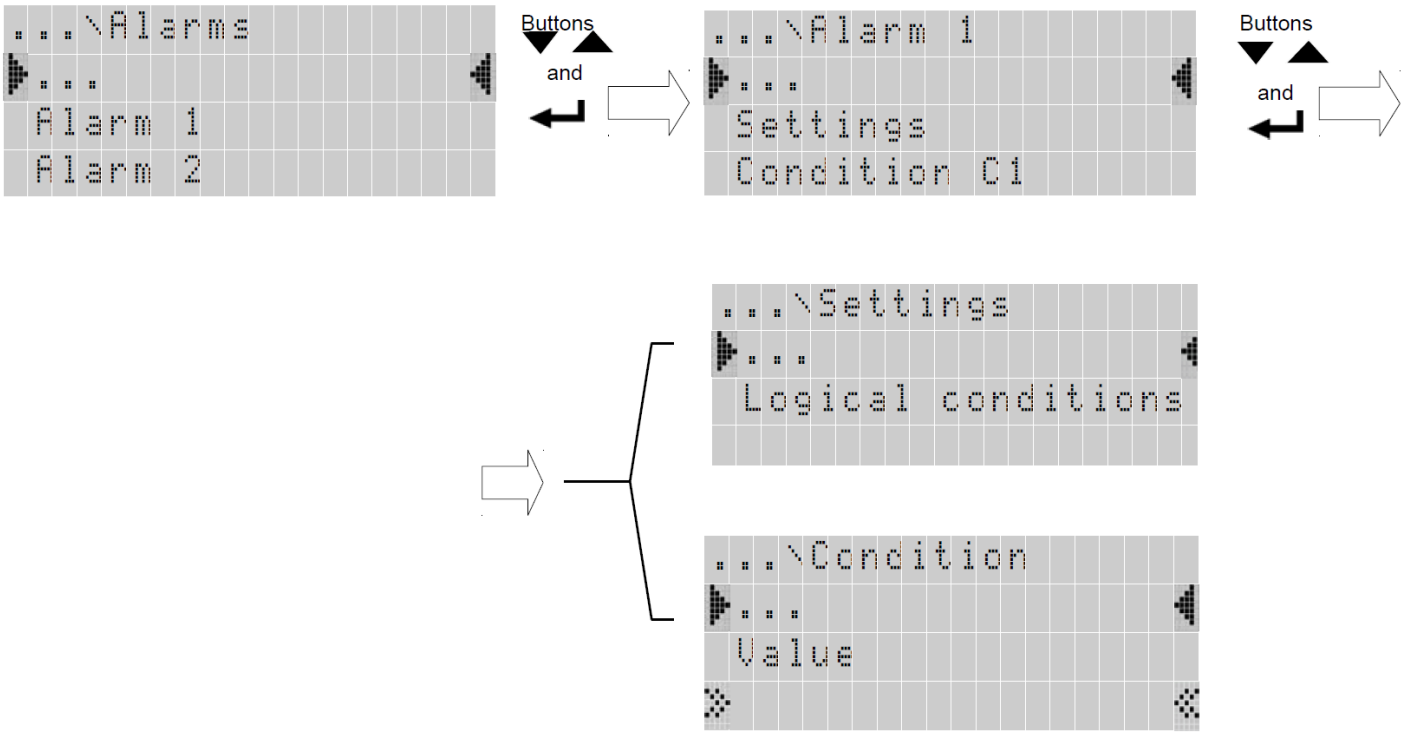

Fig.16. Alarm mode screens

Table 2

No.		Parameter name	range	Notes / description	Default value
1	Settings	Logical conditions	C1 C1 v C2 v C3 C1 ∧ C2 ∧ C3 (C1 ∧ C2) v C3 (C1 v C2) ∧ C3		C1
2		RLY state if AL on	on/off	State of relay with activated alarm Deactivated/Activated	on
3		Holdback alarm off	on/off	Lock of alarm deactivation	off
4		Disp. alarm event	on/off	When the function of alarm signaling is switched on, then after the state of emergency the alarm symbol is not blanked, but it begins to flash. The signaling lasts until pressing the buttons ▲ ▼ The function only applies to the alarm signaling, thus relay contacts will act without maintaining, according to the selected type of alarm.	off
5		Set AL defaults	No / Yes	Default settings of parameters	No
6	Condition C1	Values	U1,I1,P1,Q1,…,hh:mm	Value at the alarm output, parameter acc. to table 6	U1
7		Condition type	n_on, noFF, on,oFF, H_on,HoFF, 3non, 3noF, 3_on, 3_oF	acc. to Fig. 17	n-on
8		Lo limit condition	-144.0…144.0	Lower value of condition in % of the nominal value of input quantity acc. to table 6	99.0
9		Hi limit condition	-144.0…144.0	Upper value of condition in % of the nominal value of input quantity acc. to table 6	101.0
10		Delay condition on	0 … 3600	Delay of condition act. in seconds	0
11	Condition C2	Delay condition off	0 … 3600	Delay of condition deactivation in seconds	0
12		Hldbk cond. off->on	0 … 3600	Locking the condition reactivation in seconds	0
13	Condition C2	Display cond. event	On/off	Signaling of condition occurrence When the function of maintaining is switched on, after the state of condition is finished, the condition symbol is not blanked, but it begins to flash. The signaling lasts until pressing the buttons ▲ ▼	off

When the entered ”Upper condition value ” is lower than the ”Lower condition value ”, the condition is disabled.

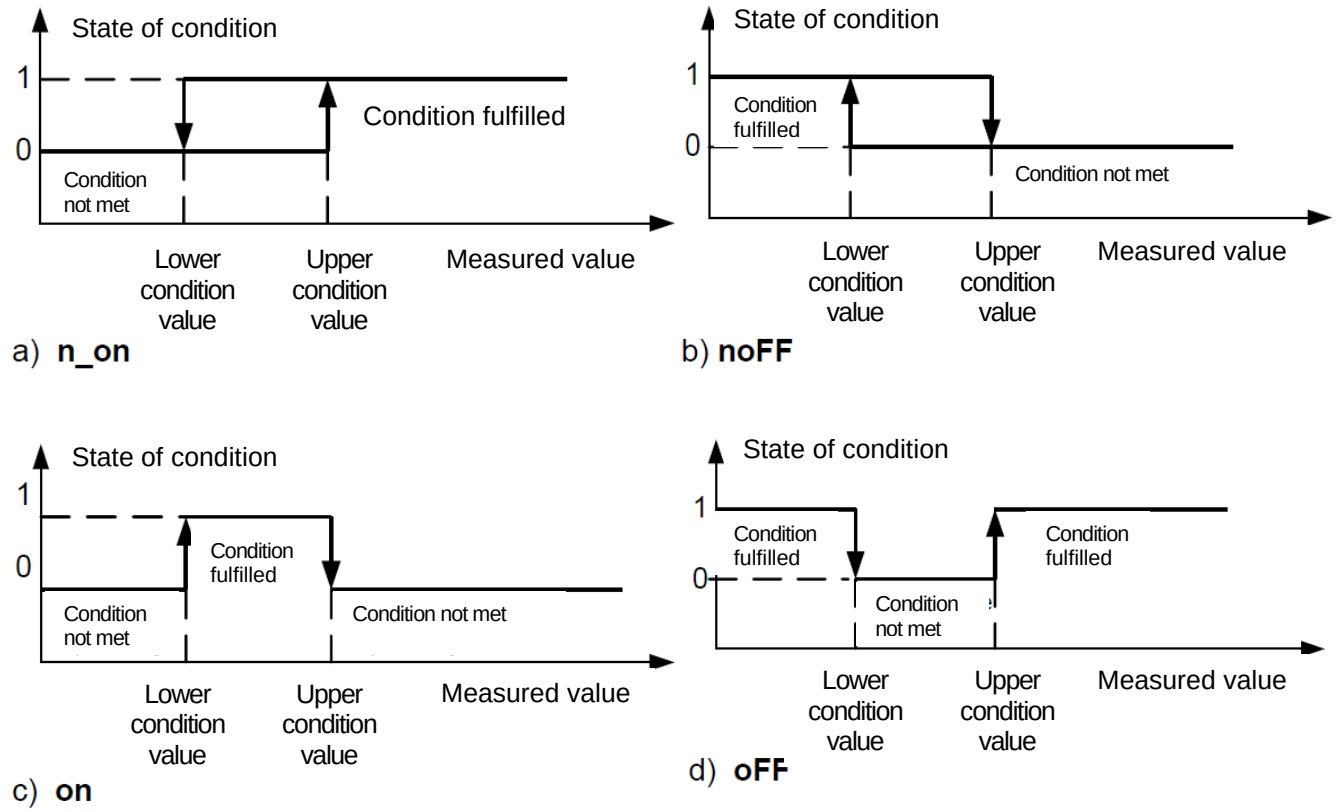

Fig.17. Types of conditions: a) n_on b) noFF c) on d) OFF

Other types of conditions:

- **H_on** – always met;
- **HoFF** – always not met,
- **3non** – when the value of the measured quantity exceeds the "Upper value of condition" at any phase - the condition will be met. The condition is disabled when the value of the measured value at all phases is less than the "Lower value of the condition."
- **3noF** – when the value of the measured quantity is lower than the "Lower value of condition" at any phase - the condition will be met. The condition is disabled when the value of the measured value at all phases is higher than the "Upper value of the condition."
- **3_on** – when the value of the measured quantity at any phase will be between the "Lower value of condition," and "Upper value of condition" - the condition is met. The condition will be disabled if the value of the measured quantity is below the "Lower value of condition" or above the "Upper value of the condition" at all phases.
- **3_oF** – when the value of the measured quantity will be below the "Lower value of condition" or above the "Upper value of condition" at any phase - the condition is met. The condition will be disabled if the value of the measured quantity is between the "Lower value of condition" and the "Upper value of the condition" at all phases.
- In the 3rd series of alarms the alarm value must come from the following ranges: 01-09, 10-18 and 19-27 (acc. to table 7). They work with the same Hysteresis thresholds of the "Lower values of condition" and "Upper value of condition" for each phase. The blanking of alarm signaling occurs after simultaneous pressing of the buttons ▲ ▼ .

8.4 Display mode

In this mode, we configure the pages displayed in the normal operation mode of the meter Measurement,

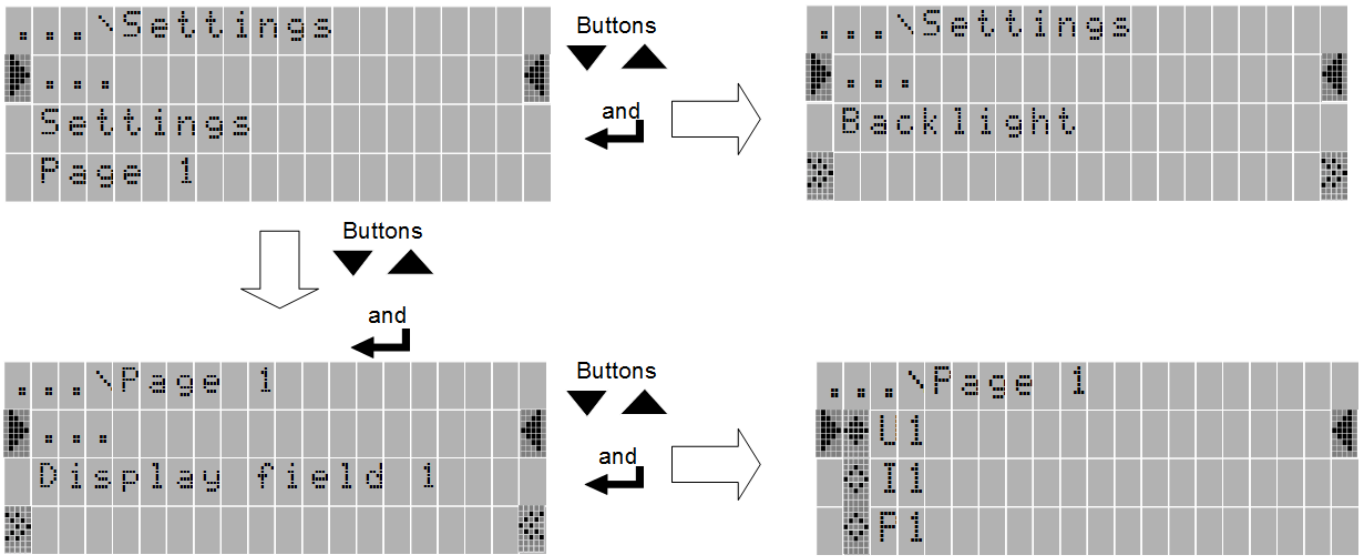

Fig.18. Ethernet mode screens

Table 3

No.		Parameter name	range	Notes / description	Default value
1	Settings	Backlight:	On, off	Display backlit Off- Disabled On- Enabled	on
		Backlight off time	0 .. 9999	Backlight shutdown time in seconds	0
		Pages cfg	23 / 23 Page 1 Page 2 : Page 11 Page 23*	Selection of pages visualized in Measurement mode.	Page 1 Page 2 : Page 11 Page 23
2		Set page defaults	No Yes	Default settings of pages	No
4	Page 1 : : Page 22	Display field 1 Display field 2 Display field 3	Off U1 I1 P1 Q1 : En S	Selection of quantities displayed on a chosen page and field in accordance with table 4.	Table 5a or 5b or 5c depending on connections layout

*Page 23 is dedicated to displaying the harmonics values of voltages U1, U2, U3 and currents I1, I2, I3 and it is not possible to change the quantity in the selected field. The page can be turned off from the preview: “Settings ->Page Selection” .

Selection of the displayed quantities:

Table 4

No.	Quantity name	Designation	Unit	Sign aling	3Ph / 4W	3Ph / 3W	1Ph / 2W
00	no quantity - display field is blank	Off			√	√	√
01	voltage of L1 phase	U1	(M,k)V		√	x	√
02	current in phase wire L1	I1	(k)A		√	√	√
03	active power of L1 phase	P1	(G,M,k)W		√	x	√
04	reactive power of L1 phase	Q1	(G,M,k)var	L/ C	√	x	√
05	apparent power of L1 phase	S1	(G,M,k)VA		√	x	√
06	active power factor of L1 phase (PF1=P1/S1)	PF1			√	x	√
07	tgφ factor of L1 phase (tg1=Q1/P1)	tg1			√	x	√
08	THD of L1* phase voltage	THD U1	%		√	√	√
09	THD of L1 phase current	THD I1	%		√	√	√
10	voltage of L2 phase	U2	(M,k)V		√	x	x
11	current in phase wire L2	I2	(k)A		√	√	x
12	active power of L2 phase	P2	(G,M,k)W		√	x	x
13	reactive power of L2 phase	Q2	(G,M,k)var	L/C	√	x	x
14	apparent power of L2 phase	S2	(G,M,k)VA		√	x	x
15	active power factor of L2 phase (PF2=P2/S2)	PF2	PF		√	x	x
16	tgφ factor of L2 phas (tg2=Q2/P2)	tg2			√	x	x
17	THD of L2* phase voltage	THD U2	%		√	√	x
18	THD of L2 phase current	THD I2	%		√	√	x
19	voltage of L3 phase	U3	(M,k)V		√	x	x
20	current in phase wire L3	I3	(k)A		√	√	x
21	active power of L3 phase	P3	(G,M,k)W		√	x	x
22	reactive power of L3 phase	Q3	(G,M,k)var	L/C	√	x	x
23	apparent power of L3 phase	S3	(G,M,k)VA		√	x	x
24	active power factor of L3 phase (PF3=P3/S3)	PF3			√	x	x
25	tgφ factor of L3 phase (tg3=Q3/P3)	tg3			√	x	x
26	THD of L3* phase voltage	THD U3	V%		√	√	x
27	THD of L3 phase current	THD I3	A%		√	√	x
28	average phase voltage	U avg	(M,k)V		√	x	x
29	average three-phase current	I avg	(k)A		√	√	x
30	three-phase active power	ΣP	(G,M,k)W	+/-	√	√	√
31	three-phase reactive power	ΣQ	(G,M,k)var	L/C	√	√	√
32	three-phase apparent power	ΣS	(G,M,k)VA		√	√	√
33	active power factor 3-phase (PF=P/S)	PF avg			√	√	x
34	tgφ factor 3-phase average (tg=Q/P)	tg avg			√	√	x
35	THDU 3-phase average*	THD U	%		√	√	x
36	THDI 3-phase average	THD I	%		√	√	x
37	Frequency	f	Hz		√	√	√
38	phase-to-phase voltage L1-L2	U12	(M,k)V		√	√	x

39	phase-to-phase voltage L2-L3	U23	(M,k)V		√	√	x
40	phase-to-phase voltage L3-L1	U31	(M,k)V		√	√	x
41	phase-to-phase average voltage	U123	(M,k)V		√	√	x
42	averaged active power (P Demand)	P DMD	(G,M,k)W		√	√	√
43	averaged apparent power (S Demand)	S DMD	(G,M,k)VA		√	√	√
44	averaged current (I Demand)	I DMD	(k)A		√	√	√
45	current in neutral wire	I(N)	(k)A		√	x	x
46	3-phase imported active energy	En P+	kWh		√	√	√
47	3-phase exported active energy	En P-	kWh		√	√	√
48	3-phase reactive inductive energy	En Q ind	kvarh		√	√	√
49	3-phase reactive capacitive energy	En Q cap	kvarh		√	√	√
50	3-phase apparent energy	En S	kVAh		√	√	√

* In 3-phase 3-wire system (3Ph/3W) respectively THD U12, THD U23, THD U31,THD U123

Default settings of the displayed pages in 3-phase 4-wire system Table 5a

P1	**P2**	**P3**	**P4**	**P5**	**P6**	**P7**	**P8**	**P9**	**P10**
U1 V	U12 V	I1 A	P1 W	Q1 var	PF1	tg1	ΣP W	U avg V	PF avg
U2 V	U23 V	I2 A	P2 W	Q2 var	PF2	tg2	ΣQ var	I avg A	tg avg
U3 V	U31 V	I3 A	P3 W	Q3 var	PF3	tg3	ΣS VA	I(N) A	f Hz
P11	**P12**	**P13**	**P14**	**P15**	**P16**	**P17**	**P18**	**P19**	**P20**
U1 V	Q1 var	U2 V	Q2 var	U3 V	Q3 var	P DMD W	ΣP W	ΣQ var	ΣS VA
I1 A	S1 VA	I2 A	S2 VA	I3 A	S3 VA	S DMD W	+En P kWh	EnQ L kvarh	En S kVAh
P1 W	PF1	P2 W	PF2	P3 W	PF3	I DMD A	-En P kWh	EnQ C kvarh	f Hz

P21	**P22**	**P23 (harm.2..51)**
THD U1 %	THD I1 %	U1 % I1 %
THD U2 %	THD I2 %	U2 I2 ...
THD U3 %	THD I3 %	U3 I3 ...

Page 23 is not configurable.

Default settings of the displayed pages in 3-phase 3-wire system Table 5b

P1	**P2**	**P3**	**P4**	**P5**	**P6**	**P7**	**P8**	**P9**	**P10**
U12 V	I1 A	U123 V	ΣP W	PF avg	P DMD W	ΣP W	ΣQ var	THD U12 %	THD I1 %
U23 V	I2 A	I avg A	ΣQ var	tg avg	S DMD W	En P+ kWh	En Q L kvarh	THD U23 %	THD I2 %
U31 V	I3 A	f Hz	ΣS VA	f Hz	I DMD A	En P- kWh	En Q C kvarh	THD U31 %	THD I3 %

Default settings of the displayed pages in 1-phase system Table 5c

P1	P2	P3	P4	P5	P6
U1 V	P1 W	PF1	P DMD W	P1 W	Q1 var
I1 A	Q1 var	tg1	S DMD W	En P+ kWh	En Q L kvarh
f Hz	S1 VA	f Hz	I DMD A	En P- kWh	En Q C kvarh

The choice of parameters on alarm and analog outputs is shown in table 6.

Table 6

Value in register	Dispalyed parameter	Parameter	Percentage value corre-sponding to 100% of the nominal range.
01	U1	Voltage of phase L1	Un [V] *
02	I1	Current in the L1 phase conductor	In [A] *
03	P1	Active power of phase L1	Un x In x cos(0°) [W] *
04	Q1	Reactive power of phaseL1	Un x In x sin(90°) [Var] *
05	S1	Apparent power of phase L1	Un x In [VA] *
06	PF1	Power factor PF of phas L1	1
07	tg1	tgφ factor of phase L1	1
08	THD U1	THD of voltage in phase L1**	100.00 [%]
09	THD I1	THD of current in phase L1	100.00 [%]
10	U2	voltage of phase L2	Un [V] *
11	I2	current in the L2 phase conductor	In [A] *
12	P2	Active power of phase L2	Un x In x cos(0°) [W] *
13	Q2	Reactive power of phase L2	Un x In x sin(90°) [Var] *
14	S2	Apparent power of phase L2	Un x In [VA] *
15	PF2	Power factor PF of phase L2	1
16	tg2	tgφ factor of phase L2	1
17	THD U2	THD of voltage in phase L2**	100.00 [%]
18	THD I2	THD of current in phase L2	100.00 [%]
19	U3	voltage of phase L3	Un [V] *
20	I3	current in the L3 phase conductor	In [A] *
21	P3	Active power of phase L3	Un x In x cos(0°) [W] *
22	Q3	Reactive power of phase L3	Un x In x sin(90°) [Var] *
23	S3	Apparent power of phase L3	Un x In [VA] *
24	PF3	Power factor PF of phase L3	1

25	tg3	tgφ factor of phase L3	1
26	THD U3	THD of voltage in phase L3**	100.00 [%]
27	THD I3	THD of current in phase L3	100.00 [%]
28	U avg	Mean phase voltage	0.00 [%]
29	I avg	Mean 3-phase current	In [A] *
30	ΣP	3-phase active power (P1+P2+P3)	3 x Un x In x cos(0°) [W] *
31	ΣQ	3-phase reactive power (Q1+Q2+Q3)	3 x Un x In x sin(90°) [Var] *
32	ΣS	3-phase apparent power (S1+S2+S3)	3x Un x In [VA] *
33	PF avg	Factor of 3-phase active power PF	1
34	tg avg	3-phase tgφ factor	1
35	THD U	3-phase THD of voltage**	100,00 [%]
36	THD I	3-phase THD of current	100,00 [%]
37	f	frequency	100 [Hz]
38	U12	Phase-to-phase voltage L1-L2	$\sqrt{3}$ Un [V] *
39	U23	Phase-to-phase voltage L2-L3	$\sqrt{3}$ Un [V] *
40	U31	Phase-to-phase voltage L3-L1	$\sqrt{3}$ Un [V] *
41	U123	Mean phase-to-phase voltage	$\sqrt{3}$ Un [V] *
42	P DMD	Mean active power (P Demand)*	3 x Un x In x cos(0°) [W] *
43	S DMD	Mean apparent power (S Demand)*	3 x Un x In [VA] *
44	I DMD	Mean current (I Demand) *	In [A] *
45	I(N)	Current in neutral conductor	In [A] *
46	T1/ B1	Temperature T1 of input 1 / State of binary input B1	400 [°C] / 1
47	T2/ B2	Temperature T2 of input 2/ State of binary input B2	400 [°C] / 1
48	En P+	Imported 3-phase active energy	100000 [kWh]
49	En P-	Exported 3-phase active energy	100000 [kWh]
50	En Q	Inductive 3-phase active energy	100000 [kvarh]
51	En Q	Capacitive 3-phase apparent energy	100000 [kvarh]
52	En S	3-phase apparent energy	100000 [kVAh]
53	Phase order	Phase order	L1,L2,L3 - 0,00 [%] L1,L3,L2 - 100,00 [%]
54	hh:mm	time, hhx100+mm	2400 - 100 [%]

*Un,In -rated values of nominal voltages and currents

**In a three-phase 3-wire system (3Ph / 3W) THD U12, THD U23, THD U31, THD U123 respectively

8.5 Ethernet/ BACnet IP mode

Select the **Ethernet/ BACnet IP** mode in options and approve the choice by the push-button.

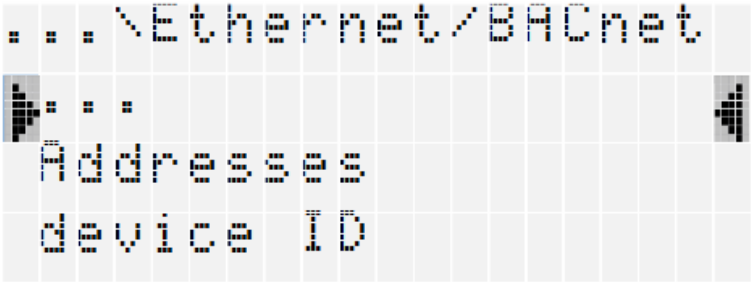

Fig.19. Ethernet mode screen

Table 7

No.		Parameter name	range	Notes / description		Default value
1	Addresses	DHCP	Off/on	Enabling/Disabling DHCP Client (service of automatic acquiring of the meter Ethernet IP protocol parameters from External DHCP Servers within the same Local Area Network)		off
2		Mode	Auto, 10Mb/s, 100Mb/s			Auto
3		IP Address	0.0.0.0...255.255.255.255	10.0.1.161	Acquired from DHCP or entered manually when DHCP is deactivated.	-
4		Subnet mask	0.0.0.0...255.255.255.255	255.0.0.1		-
5		Default gate	0.0.0.0...255.255.255.255	0.0.0.0		-
6		DNS Address	0.0.0.0...255.255.255.255	10.0.0.44		-
7		MAC Address		Aa:bb:cc:00:21:01		-
8	Device ID	Instance number	0-0x3FFFFF	123456		99999
9		Device name	100 characters	NR30 BACnet IP device		NR30BACnet

8.6 Modbus mode

Select the **Modbus** mode in options and approve the choice by the ↵ push-button.

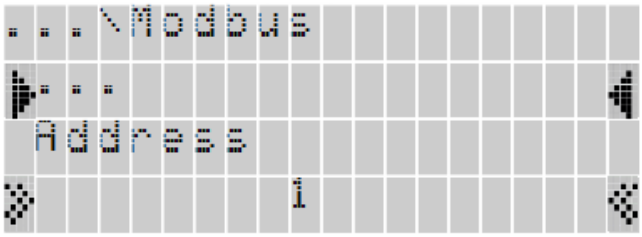

Fig.20. Modbus mode screen

Table 8

No.	Parameter name	Characteristic / value	Description	Default value
1	Address	1…247	Address on the Modbus network.	1
2	Baudrate	4800 b/s, 9600 b/s, 19,2 kb/s, 38,4 kb/s, 57,7 kb/s, 115,2 kb/s	Baud rate	9600 b/s
3	Mode	RTU 8N2, RTU 8N1, RTU 8O1, RTU 8N1	Transmission mode	RTU 8N2
4	Set defaults 42xx	No, Yes	Programmable read-only register group	No

8.7 Settings mode

Select the **Settings** mode in options and approve the choice by the ↵ push-button.

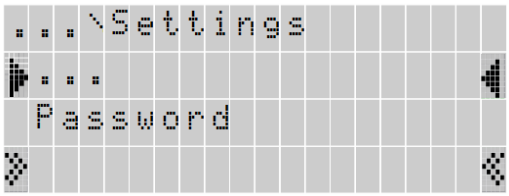

Fig.21. Settings mode screen

Table 9

No.	Parameter name	Characteristic / value	Description	Default value
1	Password	0 ... 9999	0 - off	0
2	Language	English, Polish, Deutsch		English
3	Time	hh:mm	hour:minute	00:00:00
4	Date	dd/mm/yyyy	Day/month/year	15.05.2018
5	Set all defaults	No, Yes		No

8.8 Information mode

Select the **Information** mode in options and approve the choice by the push-button.

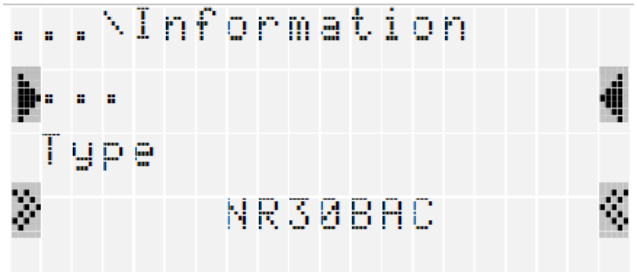

Fig.24. Information mode screen

Table 10

No.	Parameter name	Characteristic / value	Description		Default value
1	Type		Type of meter		NR30BAC
2	Order code		First 5 digits of ordering code		e.g.12200
3	Boot version		Loader version		e.g.1.04
4	Program Version		Version of the main meter program		e.g.0.60
5	Serial Number	ddmmxxxx	Current serial number of the meter day month current number		np.15070006
6	MAC Address	xx:xx:xx:xx:xx:xx	48-bit hardware address of the Ethernet interface written in hexadecimal		e.g.64:0E:0D:0C:0B:0A
7	DHCP	Off-on	Enabling/disabling DHCP client (the service of automatic acquiring the parameters of Ethernet interface IP protocol of the meter from external DHCP servers located within the same LAN network).		off
8	IP Address	0.0.0.0...255.255.255.255	10.0.1.161	Acquired from DHCP or entered manually when deactivated	-
9	Subnet mask	0.0.0.0...255.255.255.255	255.0.0.1		-
10	Gateway Address	0.0.0.0...255.255.255.255	0.0.0.0		-
11	DNS Address	0.0.0.0...255.255.255.255	10.0.0.44		-

9 SERIAL INTERFACES

9.1 *Ethernet/ BACnet IP INTERFACE*

The NR30BAC meters are equipped with a Fast Ethernet interface (100 Mb/s) enabling the meter connection (using the RJ45 socket) to the Ethernet network. The BACnet IP communication standard described in EN ISO 16484-5 was used.

In a BACnet IP network based on an Ethernet interface, each device is identified by its IP address and port number, as well as by the device name and instance number. The port number is set permanently and amounts to 47808. Parameters that the meter allows to modify from the Menu level are the meter IP address, device name of the Device object, instance number of the Device object. Table 11 below contains the most important information about the properties of the implemented BACnet IP protocol. The functional blocks used (Annex K of the standard) can be found in table 12.

Table 11

Protocoll version	1.0
Protocol revision number	12
Device profile (Annex L of the standard)	BACnet Application Specific Controller (B-ASC)
Standard objects used by the meter	Device Object, Analog Input Object
Data Link Layer	BACnet IP, (attachment J of the standard)
coding	ANSI X3.4 (UTF-8)
Packet fragmentation	lack
The ability to dynamically add objects	lack

Table 12

Data exchange	**Device management**
ReadProperty-B (DS-RP-B)	TimeSynchronization-B (DM-TS-B)
ReadPropertyMultiple-B (DS-RPM-B)	Dynamic Device Binding-B (DM-DDB-B)
WriteProperty-B (DS-WP-B)	
WritePropertyMultiple-B (DS-WPM-B)	
Change Of Value-B (DS-COV-B)*	

* The maximum subscription time is 1 year and the maximum number of subscriptions is 64.

Optional properties used by the Device to Location object, Description , while optional properties used by the Analog Input to Description object. For the Device object it is not possible to use the *ReadPropertyMultiple* function because of the lack of frame fragmentation mechanism. More information about the Analog Input objects and the measured values they represent can be found in Chapter 9. The PICS file for the device can be downloaded from www.lumel.com.pl.

9.2 Ethernet /BACnet IP interface connection

To access the Ethernet services, it is required to connect the meter to the network via the RJ45 slot located at the rear part of the meter, operating in accordance with protocol acc. to EN ISO 16484-5 standard.

Description of RJ45 socket LEDs function:

- yellow LED - illuminates when the meter is properly connected to the Ethernet network 100 Base-T, does not light up when the meter is not connected to the network or is connected to 10-Base-T network.
- green LED - Tx/Rx illuminates when the meter sends and receives data, flickers irregularly, when no data is transmitted the LED lights up permanently

In order to connect the meter to the network the user should use twisted pair cable.

- U/FTP – twisted pair cable with each pair foiled,
- F/FTP – twisted pair cable with each pair foiled, additionally cable with foil shield,
- S/FTP (formerly SFTP) – twisted pair cable with each pair foiled, additionally cable with wire mesh shield,
- SF/FTP (formerly S-STP) – twisted pair cable with each pair foiled, additionally with foil and wire mesh shield,

Categories of twisted pair cable according to the European standard EN 50173 minimum: Class D (category 5) - for high-speed local area networks, includes applications using the frequency band up to 100 MHz. For Ethernet interface the user should use twisted pair cable of STP type (shielded) category 5 with RJ-45 connector with conductors colors (in accordance with the colors described in table 13) acc. to the following standard:

- EIA/TIA 568A for both connectors at the so-called simple connection of NR30BAC to the network hub or switch,
- EIA/TIA 568A for the first connector and EIA/TIA 568B for the second connector at the so-called patch cord connection (crossover) used, among others, when connecting NR30BAC to the computer.

Table 13

Conductor no.	Signal	Conductor color acc. to standard	
		EIA/TIA 568A	EIA/TIA 568B
1	TX+	white-green	white-orange
2	TX-	green	orange
3	RX+	white-orange	white-green
4	EPWR+	blue	blue
5	EPWR+	white-blue	white-blue
6	RX-	orange	green
7	EPWR-	white-brown	white-brown
8	EPWR-	brown	brown

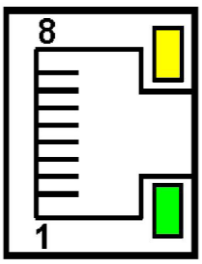

Fig.23 View and numbering of RJ45 slot pins

9.3 RS485 INTERFACE – the list of parameters

The implemented protocol is in accordance with the PI-MBUS-300 Rev G of Modicon Company. The list of serial link parameters of NR30BAC meter:

- ID 0xE6
- meter address 1..247,
- baud rate 4.8, 9.6, 19.2, 38.4, 57.6, 115.2 kbit/s,
- operation mode Modbus RTU,
- information unit 8N2, 8E1, 8O1, 8N1,
- maximum time to commence the response 600 ms,
- maximum number of read registers in one query
  - 61 registers – 4 byte,
  - 122 registers – 2 byte,
- implemented functions -03, 04, 06, 16, 17,
  - 03, 04 registers reading,
  - 06 one register record
  - 16 n - registers record,
  - 17 device identification

Default settings: address 1, baud rate 9.6 kbit/s, RTU 8N2 mode,

9.4 Examples of registers reading and saving

Readout of n-registers (code 03h)

Example 1 . Readout of 2 16-bit registers of integer type, starting with the register addressed 0FA0h (4000) - registers values 10, 100.

Request:

Device address	Function	Register address		Number of registers		Checksum CRC
		B1	B0	B1	B0	
01	03	0F	A0	00	02	C7 3D

Response:

Device address	Function	Number of bytes	Value from the register 0FA0 (4000)		Value from register 0FA1 (4001)		Checksum CRC
			B1	B0	B1	B0	
01	03	04	00	0A	00	64	E4 6F

Example 2. Readout of 2 32-bit registers of float type as a combination of 2 16-bit registers starting with the register addressed 1B58h (7000) - registers values 10, 100.

Request:

Device address	Function	Register address		Number of registers		Checksum CRC
		B1	B0	B1	B0	
01	03	1B	58	00	04	C3 3E

Response:

Device address	Function	Number of bytes	Value from the register 1B58 (7000)		Value from the register 1B59 (7001)		Value from the register 1B5A (7002)		Value from the register 1B5B (7003)		Checksum CRC
			B3	B2	B1	B0	B3	B2	B1	B0	
01	03	08	41	20	00	00	42	C8	00	00	E4 6F

Example 3 . Readout of 2 32-bit registers of float type as a combination of 2 16-bit registers starting with the register addressed 1770h (6000) - registers values 10, 100.

Request:

Device address	Function	Register address		Number of registers		Checksum CRC
		B1	B0	B1	B0	
01	03	17	70	00	04	4066

Response:

Device address	Function	Number of bytes	Value from the register 1770h(6000)		Value from the register 1770h(6000)		Value from the register 1772h(6002)		Value from the register 1772h(6002)		Checksum CRC
			B1	B0	B3	B2	B1	B0	B3	B2	
01	03	08	00	00	41	20	00	00	42	C8	E4 6F

Example 4. Readout of 2 32-bit registers of float type, starting with the register addressed 1D4Ch (7500) - register values 10, 100.

Request:

Device address	Function	Register address		Number of registers		Checksum CRC
		B1	B0	B1	B0	
01	03	1D	4C	00	02	03 B0

Response:

Device address	Function	Number of bytes	Value from the register 1D4C (7500)				Value from register 1D4D (7501)				Checksum CRC
			B3	B2	B1	B0	B3	B2	B1	B0	
01	03	08	41	20	00	00	42	C8	00	00	E4 6F

Readout of single register (code 06h)

Example 5. Record of 543 (0x021F) value to register 4000 (0x0FA0)

Request:

Device address	Function	Register address		Register value		Checksum CRC
		B1	B0	B1	B0	
01	06	0F	A0	02	1F	CA 54

Response:

Device address	Function	Register address		Register value		Checksum CRC
		B1	B0	B1	B0	
01	06	0F	A0	02	1F	CA 54

Saving to n-registers (code 10h)

Example 6. Readout of 2 registers, starting with the register addressed 0FA3h (4003)

Recording values 20, 2000.

Request:

Device address	Function	Address of reg.Hi	Address of reg.Lo	No. of reg. Hi	No. of reg. Lo	Number of bytes	Value for reg. 0FA3 (4003)		Value for reg. 0FA4 (4004)		Checksum CRC
							B1	B0	B1	B0	
01	10	0F	A3	00	02	04	00	14	07	D0	BB 9A

Response:

Device address	Function	Register address		Number of registers		Checksum CRC
		B1	B0	B1	B0	
01	10	0F	A3	00	02	B2 FE

Report identifying the device (code 11h)

Example 7. Device identification

Request:

Device address	Function	Checksum
01	11	C0 2C

Response:

Address	Function	Number of bytes	ID	Device state	Information field for device software version (e.g. "NR30-0.92 - NR30 device with software version 0.92)		Checksum (CRC)
01	11	19	EB	FF	NR30BAC-0.92		166C
					4E 52 33 30 42 41 43 2D 30 2E 39 32	20 20 20 20 20 20 20 20 20 20 20 20 20 20	

10 METER DATA STRUCTURE

In the NR30BAC meter, data can be read using the BACnet IP protocol by reading the properties of individual objects configured in the device. Data can also be read via the RS485 interface and Modbus protocol by reference to individual registers.

10.1 Data structure for the Ethernet / BACnet IP interface

The meter has two types of objects. They are DEVICE type object and ANALOG INPUT type objects. From the DEVICE object you can read basic information about the meter, such as device name, instance number. ANALOG INPUT objects are used to read measurement data. The measured value is contained in the property called Present Value. Table 14 contains a list of the most important properties of ANALOG INPUT objects.

Table 14

Object instance number	Object name	Description	Units
0	U1	Voltage of L1 phase	V
1	I1	Current of L1 phase	A
2	P1	Active power of L1 phase	W
3	Q1	Reactive power of L1 phase	var
4	S1	Apparent power of L1 phase	VA
5	PF1	Factor of active power of L1 phase (PF1=P1/S1)	-
6	tg1	tgφ factor of L1 phase (tg1 =Q1/P1)	-
7	THD U1(U12)	THD U1*	%
8	THD I1	THD I1	%
9	U2	Voltage of L2 phase	V
10	I2	Current of L2 phase	A
11	P2	Active power of L2 phase	W
12	Q2	Reactive power of L2 phase	var
13	S2	Apparent power of L2 phase	VA
14	PF2	Factor of active power of L2 phase (PF2=P2/S2)	-
15	tg2	tgφ factor of L2 phase (tg2 =Q2/P2)	-
16	THD U2(U23)	THD U2*	%
17	THD I2	THD I2	%
18	U3	Voltage of L3 phase	V
19	I3	Current of L3 phase	A
20	P3	Active power of L3 phase	W
21	Q3	Reactive power of L3 phase	var
22	S3	Apparent power of L3 phase	VA
23	PF3	Factor of active power of L3 phase (PF3=P3/S3)	-
24	tg3	tgφ factor of L3 phase (tg3 =Q3/P3)	-

25	THD U3(U31)	THD U3*	%
26	THD I3	THD I3	%
27	Uavg	Average 3-phase voltage	V
28	Iavg	Average 3-phase current	A
29	P	3-phase active power (P1+P2+P3)	W
30	Q	3-phase reactive power (Q1+Q2+Q3)	var
31	S	3-phase apparent power (S1+S2+S3)	VA
32	PF	3-phase active power factor (PF=P/S)	-
33	tg	tgφ factor 3-phase average (tg=Q/P)	-
34	THD U	THD U* 3-phase average	%
35	THD I	THD I 3-phase average	%
36	f	Frequency	Hz
37	U12	Phase-to-phase voltage L_{1-2}	V
38	U23	Phase-to-phase voltage L_{2-3}	V
39	U31	Phase-to-phase voltage L_{3-1}	V
40	U123	Average phase-to-phase voltage L1-2	V
41	P DMD	averaged active power (P Demand)	W
42	S DMD	averaged apparent power (S Demand)	VA
43	I_DMD	averaged current (I Demand)	A
44	I_N	Current in neutral wire (calculated from vectors)	A
45	CntEnP+	3-phase active imported energy (number of register 7546 overflows, reset after 9999.9 MWh is reached)	100 MWh
46	EnP+	3 –phase active imported energy (counter up to 99999.99 kWh)	kWh
47	CntEnP-	3-phase active exported energy (number of register 7548 overflows, reset after 9999.9 MWh is reached)	100 MWh
48	EnP-	3 –phase active exported energy (counter up to 99999.99 kWh)	kWh
49	CntEnQl	3-phase reactive inductive energy (number of register 7550 overflows, reset after 9999.9 MVArh is reached)	100 Mvarh
50	EnQl	Reactive inductive energy 3 –phase (counter up to 99999.99 kVArh)	kvarh
51	CntEnQc	3-phase reactive capacitive energy (number of register 7552 overflows, reset after 9999.9 MVArh is reached)	100 Mvarh
52	EnQc	Reactive capacitive energy 3 –phase (counter up to 99999.99 kVArh)	kvarh
53	CntEnS	Apparent energy (number of register 7554 overflows, reset after 9999.9 MVAh is reached)	100 MVAh
54	EnS	Apparent energy (counter up to 99999,99 kVAh)	kVAh
55	Status1	Status register 1	-
56	Status2	Status register 2	-
57	Status3	Status register 3	-
58	Status4	Status register 4	-
59	Status5	Status register 5	-
60	Status6	Status register 6	-
61	RESERVED	RESERVED	-
62	RESERVED	RESERVED	-
63	RESERVED	RESERVED	-

64	U1_min	Voltage L1 min	V
65	U1_max	Voltage L1 max	V
66	U2_min	Voltage L2 min	V
67	U2_max	Voltage L2 max	V
68	U3_min	Voltage L3 min	V
69	U3_max	Voltage L3 max	V
70	I1_min	Current L1 min	A
71	I1_max	Current L1 max	A
72	I2_min	Current L2 min	A
73	I2_max	Current L2 max	A
74	I3_min	Current L3 min	A
75	I3_max	Current L3 max	A
76	P1_min	Active power L1 min	W
77	P1_max	Active power L1 max	W
78	P2_min	Active power L2 min	W
79	P2_max	Active power L2 max	W
80	P3_min	Active power L3 min	W
81	P3_max	Active power L3 max	W
82	Q1_min	Reactive power L1 min	var
83	Q1_max	Reactive power L1 max	var
84	Q2_min	Reactive power L2 min	var
85	Q2_max	Reactive power L2 max	var
86	Q3_min	Reactive power L3 min	var
87	Q3_max	Reactive power L3 max	var
88	S1_min	Apparent power L1 min	VA
89	S1_max	Apparent power L1 max	VA
90	S2_min	Apparent power L2 min	VA
91	S2_max	Apparent power L2 max	VA
92	S3_min	Apparent power L3 min	VA
93	S3_max	Apparent power L3 max	VA
94	PF1_min	Power factor (PF) L1 min	-
95	PF1_max	Power factor (PF) L1 max	-
96	PF2_min	Power factor (PF) L2 min	-
97	PF2_max	Power factor (PF) L2 max	-
98	PF3_min	Power factor (PF) L3 min	-
99	PF3_max	Power factor (PF) L3 max	-
100	tg1_min	Ratio of reactive to active power L1 min	-
101	tg1_max	Ratio of reactive to active power L1 max	-
102	tg2_min	Ratio of reactive to active power L2 min	-
103	tg2_max	Ratio of reactive to active power L2 max	-
104	tg3_min	Ratio of reactive to active power L3 min	-
105	tg3_max	Ratio of reactive to active power L3 max	-
106	U12_min	Phase-to-phase voltage L_{1-2} min	V
107	U12_max	Phase-to-phase voltage L_{1-2} max	V

108	U23_min	Phase-to-phase voltage L_{2-3} min	V
109	U23_max	Phase-to-phase voltage L_{2-3} max	V
110	U31_min	Phase-to-phase voltage L_{3-1} min	V
111	U31_max	Phase-to-phase voltage L_{3-1} max	V
112	Uavg_min	Average 3-phase voltage min	V
113	Uavg_max	Average 3-phase voltage max	V
114	Iavg_min	Average 3-phase current min	A
115	Iavg_max	Average 3-phase current max	A
116	3P_min	3-phase active power min	W
117	3P_max	3-phase active power max	W
118	3Q_min	3-phase reactive power min	var
119	3Q_max	3-phase reactive power max	var
120	3S_min	3-phase apparent power min	VA
121	3S_max	3-phase apparent power max	VA
122	3PF_min	Power factor (PF) min	-
123	3PF_max	Power factor (PF) max	-
124	3tg_min	3-phase average min. ratio of reactive to active power	-
125	3tg_max	3-phase average max. ratio of reactive to active power	-
126	f_min	Frequency min	Hz
127	f_max	Frequency max	Hz
128	U123_min	Average phase-to-phase voltage min	V
129	U123_max	Average phase-to-phase voltage max	V
130	P DMD min	Averaged active power (P Demand) min	W
131	P DMD max	Averaged active power (P Demand) max	W
132	S DMD min	Averaged apparent power (S Demand) min	VA
133	S DMD max	Averaged apparent power (S Demand) max	VA
134	I_DMD min	Averaged current (I Demand) min	A
135	I_DMD max	Averaged current (I Demand) max	A
136	I_N min	Current in neutral wire min	A
137	I_N max	Current in neutral wire max	A
138	RESERVED	RESERVED	-
139	RESERVED	RESERVED	-
140	RESERVED	RESERVED	-
141	RESERVED	RESERVED	-
142	THD U1(U12) min	THD U1 min	%
143	THD U1(U12) max	THD U1 max	%
144	THD U2(U23) min	THD U2 min	%
145	THD U2(U23) max	THD U2 max	%
146	THD U3(U31) min	THD U3 min	%
147	THD U3(U31) max	THD U3 max	%
148	THD U min	THD U min	%
149	THD U max	THD U max	%
150	THD I1 min	THD I1 min	%
151	THD I1 max	THD I1 max	%

152	THD I2 min	THD I2 min	%
153	THD I2 max	THD I2 max	%
154	THD I3 min	THD I3 min	%
155	THD I3 max	THD I3 max	%
156	THD I min	THD I min	%
157	THD I max	THD I max	%
158	U1h2	2nd harmonics of voltage of L1 phase	%
...	...	…	...
207	U1h51	51st harmonics of voltage of L1 phase	%
208	U2h2	2nd harmonics of voltage of L2 phase	%
...	...	...	...
257	U2h51	51st harmonics of voltage of L2 phase	%
258	U3h2	2nd harmonics of voltage of L3 phase	%
...	...	...	...
307	U3h51	51st harmonics of voltage of L3 phase	%
308	I1h2	2nd harmonics of current of L1 phase	%
...	...	...	...
357	I1h51	51st harmonics of current of L1 phase	%
358	I2h2	2nd harmonics of current of L2 phase	%
...	...	...	...
407	I2h51	51st harmonics of current of L2 phase	%
408	I3h2	2nd harmonics of current of L3 phase	%
...	...	...	...
457	I3h51	51st harmonics of current of L3 phase	%
458	Q DMD	Averaged reactive power (Q Demand)	var
459	Q DMD min	Averaged reactive power (Q Demand) max	var
460	Q DMD max	Averaged reactive power (Q Demand) min	var
461	PFa	Average active power factor (PF1+PF2+PF3)/3)	-
462	PFa_min	Average active power factor min	-
463	PFa_max	Average active power factor max	-

* In 3-phase 3-wire system (3P/3W) accordingly THD U12, THD U23, THD U31, THD U123

10.2 Register structure for RS485 / Modbus interface

In the NR30BAC meter, data are placed in 16 and 32-bit registers. Process variables and meter parameters are placed in the address area of registers in a way depended on the variable value type. Bits in 16-bit register are numbered from the youngest to the oldest (b0-b15). The 32-bit registers contain numbers of float type in IEEE-754 standard. 3210 byte sequence - the oldest is sent first.

Table 15

Address range	Value type	Description
4000 – 4159	Integer (16 bits)	Value set in the 16-bit register. Registers for meter configuration. Description of registers is shown in Table 17. Registers for writing and readout.
4200 – 4260	Integer (16 bits)	Value set in the 16-bit register. Registers for configuration of programmable group of registers for readout. Description of registers is shown in Table 18. Registers for writing and readout.
4300 - 4385	Integer (16 bits)	Value set in the 16-bit register. Registers for displayed pages configuration. Description of registers is shown in Table 20. Registers for writing and readout.
4400- 4485	Integer (16 bits)	Value set in the 16-bit register. Status registers, energy value, MAC address of the meter, configuration data. Description of registers is shown in Table 21. Readout registers.
6000 – 6982	Float (2x16 bits)	Value is set in the two following 16-bit registers. Registers contain exactly the same data, as 32-bit registers of 7500 – 7953 range. Readout registers. Bytes sequence (1-0-3-2)
7000 - 7118	Float (2x16 bits)	Content of the registers set in the registers 4200 – 4359. Bytes sequence (3-2-1-0) (see table 19)
7200 – 7318	Float (2x16 bits)	Content of the registers set in the registers 4200 – 4359. Bytes sequence (1-0-3-2) (see table 19)
7400 - 7459	Float (32 bits)	Content of the registers set in the registers 4200 – 4359. Values set in one 32-bit register. (see table 19)
7500 – 7991	Float (32 bits)	Values set in one 32-bit register. Description of registers is shown in Table 22. Readout registers.
8000 - 8982	Float (2x16 bits)	Value is set in the two following 16-bit registers. Registers contain exactly the same data, as 32-bit registers of 7500 – 7953 range. Readout registers. Bytes sequence (3-2-1-0)

Table 16

Register address	Operations	Range	Description	Default
4000	RW	0…9999	Protection - password	0
4001	RW	0 .. 1	Type of connection 0 - 3Ph/4W 1 - 3Ph/3W 2 - 1Ph/2W	0
4002	RW	0 .. 2	Voltage on terminal 2 0 - first L1 phase voltage 1 - second L2 phase voltage 2 - third L3 phase voltage	0

4003	RW	0 .. 2	Voltage on terminal 5 0 - first L1 phase voltage 1 - second L2 phase voltage 2 - third L3 phase voltage	1
4004	RW	0 .. 2	Voltage on terminal 8 0 - first L1 phase voltage 1 - second L2 phase voltage 2 - third L3 phase voltage	2
4005	RW	0..5	Current on terminals 1, 3: 0 - first phase I_{L1} current 1 - reversed direction of the current of phase L1: $-I_{L1}$ 2 - second phase I_{L2} current 3 - reversed direction of the current of phase L2: $-I_{L2}$ 4 - third phase I_{L3} current 5 - reversed direction of the current of phase L3: $-I_{L3}$	0
4006	RW	0..5	Current on terminals 4, 6: 0 - first phase I_{L1} current 1 - reversed direction of the current of phase L1: $-I_{L1}$ 2 - second phase I_{L2} current 3 - reversed direction of the current of phase L2: $-I_{L2}$ 4 - third phase I_{L3} current 5 - reversed direction of the current of phase L3: $-I_{L3}$	2
4007	RW	0..5	Current on terminals 7, 9: 0 - first phase I_{L1} current 1 - reversed direction of the current of phase L1: $-I_{L1}$ 2 - second phase I_{L2} current 3 - reversed direction of the current of phase L2: $-I_{L2}$ 4 - third phase I_{L3} current 5 - reversed direction of the current of phase L3: $-I_{L3}$	4
4008	RW	0,1	Input current range: 1 A or 5 A: 0 - 1 A, 1 - 5 A or 63A depending on the version	1
4009	RW		reserved	
4010	RW	0..18	Transformer primary voltage, two older bytes	0
4011	RW	0..65535	Transformer primary voltage, two younger bytes	100
4012	RW	1 .. 10000	Transformer secondary voltage x 10	1000
4013	RW	1 .. 20000	Transformer primary current	5
4014	RW	1 .. 1000	Transformer secondary current	5
4015	RW	0…2	Averaging time of the active power P Demand apparent power S Demand current I Demand 0 – 15, 1- 30, 2- 60 minutes	0
4016	RW	0.1	Synchronizationwith real-time clock 0 - no synchronization 1 - synchronization with a clock	1
4017	RW		Reserved	
4018	RW	577..1000 V or 2300 .. 4000 V	Phase input voltage x10	577 or 2300

4019	RW	1000 .. 1700 V or 4000 .. 6900 V	Phase-to-phase input voltage x10	1000 or 4000
4020	RW		reserved	
4021	RW		reserved	
4022	RW		reserved	
4023	RW		reserved	
4024	RW	0…4	Energy counters erasing 0 – no changes, 1 – erase active energies 2 – erase reactive energies, 3 – erase apparent energies, 4 – erase all energies	0
4025	RW	0.1	Erasing averaged parameters P Demand, S Demand, I Demand	0
4026	RW	0.1	Min, max erasing	0
4027	RW	0.1	Erasing alarm signalization latch	0
4028	RW		reserved	
4029	RW		reserved	
4030	RW	0…4	Alarm output 1 - Logic tasks of the conditions 1, 2, 3 0 – C1 1 – C1 v C2 v C3 2 – C1 ∧ C2 ∧ C3 3 – (C1 ∧ C2) v C3 4 – (C1 v C2) ∧ C3	0
4031	RW	0,1	Alarm output 1 - State of the relay at the alarm switched on: 0 - relay disabled 1 - relay enabled	1
4032	RW	0,1	Alarm output 1 - alarm deactivation lock	0
4033	RW	0,1	Alarm output 1 - alarm signalization	0
4034	RW	0.1..43	Alarm output 1 - value for the condition 1 (c1) (code as in Table 6)	38
4035	RW	0..9	Alarm output 1 - type for the condition 1: 0 – n_on, 1 – noFF, 2 – on, 3 – oFF, 4 – H_on, 5 – HoFF, 6 – 3non, 7 – 3noF, 8 – 3_on, 9 – 3_oF	0
4036	RW	-1440..0..1440 [$^{o}/_{oo}$]	Alarm output 1 - lower value of the condition 1 switch of the rated input range	900
4037	RW	-1440..0..1440 [$^{o}/_{oo}$]	Alarm output 1 - upper value of the condition 1 switch of the rated input range	1100
4038	RW	0..3600 s	Alarm output 1 - condition 1 activation delay	0
4039	RW	0..3600 s	Alarm output 1 - condition 1 deactivation delay	0
4040	RW	0..3600 s	Alarm output 1 - condition 1 re-activation lock	0
4041	RW	0,1	Alarm output 1 - condition 1 signalization	0
4042	RW		reserved	
4043	RW	0.1..52	Alarm output 1 - value for the condition 2 (c2) (code as in Table 6)	38

4044	RW	0..9	Alarm output 1 - type for the condition 2: 0 – n_on, 1 – noFF, 2 – on, 3 – oFF, 4 – H_on, 5 – HoFF, 6 – 3non, 7 – 3noF, 8 – 3_on, 9 – 3_oF	0
4045	RW	-1440..0..1440 [°/oo]	Alarm output 1 - lower value of the condition 2 switch of the rated input range	900
4046	RW	-1440..0..1440 [°/oo]	Alarm output 1 - upper value of the condition 2 switch of the rated input range	1100
4047	RW	0..3600 s	Alarm output 1 - condition 2 activation delay	0
4048	RW	0..3600 s	Alarm output 1 - condition 2 deactivation delay	0
4049	RW	0..3600 s	Alarm output 1 - condition 2 re-activation lock	0
4050	RW	0,1	Alarm output 1– condition 2 signalization	0
4051	RW		reserved	
4052	RW	0.1..52	Alarm output 1 - value for the condition 3 (c3) (code as in Table 8)	38
4053	RW	0..9	Alarm output 1 - type for the condition 3: 0 – n_on, 1 – noFF, 2– on, 3 – oFF, 4 – H_on, 5 – HoFF, 6 – 3non, 7 – 3noF, 8 – 3_on, 9– 3_oF	0
4054	RW	-1440..0..1440 [°/oo]	Alarm output 1 - lower value of the condition 3 switch of the rated input range	900
4055	RW	-1440..0..1440 [°/oo]	Alarm output 1 - upper value of the condition 3 switch of the rated input range	1100
4056	RW	0..3600 s	Alarm output 1 - condition 3 activation delay	0
4057	RW	0..3600 s	Alarm output 1 - condition 3 deactivation delay	0
4058	RW	0..3600 s	Alarm output 1 - condition 2 re-activation lock	0
4059	RW	0,1	Alarm output 1– condition 2 signalization	0
4060	RW		reserved	
4061	RW	0…4	Alarm output 2 - Logic tasks of the conditions 1, 2, 3 0 – C1 1 – C1 v C2 v C3 2 – C1 ∧ C2 ∧ C3 3 – (C1 ∧ C2) v C3 4 – (C1 v C2)∧ C3	0
4062	RW	0,1	Alarm output 2 - State of the relay at the alarm switched on: 0 - relay disabled 1 - relay enabled	1
4063	RW	0,1	Alarm output 2 - alarm deactivation lock	0
4064	RW	0,1	Alarm output 2 - alarm signalization	0
4065	RW	0.1..43	Alarm output 2 - value for the condition 1 (c1) (code as in Table 6)	38
4066	RW	0..9	Alarm output 2 - type for the condition 1: 0 – n_on, 1 – noFF, 2 – on, 3 – oFF, 4 – H_on, 5 – HoFF, 6 – 3non, 7 – 3noF, 8 – 3_on, 9 – 3_oF	0
4067	RW	-1440..0..1440 [°/oo]	Alarm output 2 - lower value of the condition 1 switch of the rated input range	900

4068	RW	-1440..0..1440 [°/oo]	Alarm output 2 - upper value of the condition 1 switch of the rated input range	1100
4069	RW	0..3600 s	Alarm output 2 - condition 1 activation delay	0
4070	RW	0..3600 s	Alarm output 2 - condition 1 deactivation delay	0
4071	RW	0..3600 s	Alarm output 2 - condition 1 re-activation lock	0
4072	RW	0,1	Alarm output 2– condition 1 signalization	0
4073	RW		reserved	
4074	RW	0.1..43	Alarm output 2 - value for the condition 2 (c2) (code as in Table 6)	38
4075	RW	0..9	Alarm output 2 - type for the condition 2: 0 – n_on, 1 – noFF, 2 – on, 3 – oFF, 4 – H_on, 5 – HoFF, 6 – 3non, 7 – 3noF, 8 – 3_on, 9 – 3_oF	0
4076	RW	-1440..0..1440 [°/oo]	Alarm output 2 - lower value of the condition 2 switch of the rated input range	900
4077	RW	-1440..0..1440 [°/oo]	Alarm output 2 - upper value of the condition 2 switch of the rated input range	1100
4078	RW	0..3600 s	Alarm output 2 - condition 2 activation delay	0
4079	RW	0..3600 s	Alarm output 2 - condition 2 deactivation delay	0
4080	RW	0..3600 s	Alarm output 2 - condition 2 re-activation lock	0
4081	RW	0,1	Alarm output 2– condition 2 signalization	0
4082	RW		Reserved	
4083	RW	0.1..43	Alarm output 2 - value for the condition 3 (c3) (code as in Table 6)	38
4084	RW	0..9	Alarm output 2 - type for the condition 3: 0 – n_on, 1 – noFF, 2 – on, 3 – oFF, 4 – H_on, 5 – HoFF, 6 – 3non, 7 – 3noF,8 – 3_on, 9 – 3_oF	0
4085	RW	-1440..0..1440 [°/oo]	Alarm output 2 - lower value of the condition 3 switch of the rated input range	900
4086	RW	-1440..0..1440 [°/oo]	Alarm output 2 - upper value of the condition 3 switch of the rated input range	1100
4087	RW	0..3600 s	Alarm output 2 - condition 3 activation delay	0
4088	RW	0..3600 s	Alarm output 2 - condition 3 deactivation delay	0
4089	RW	0..3600 s	Alarm output 2 - condition 2 re-activation lock	0
4090	RW	0,1	Alarm output 2 - condition 2 signalization	0
4091	RW		reserved	
4092	RW		reserved	
4093	RW		reserved	
4094	RW		reserved	

4095	RW		reserved	
4096	RW		reserved	
4097	RW		reserved	
4098	RW		reserved	
4099	RW		reserved	
4100	RW	1..247	Modbus Network Address	1
4101	RW	0..3	Transmission mode: 0->8n2, 1->8e1, 2->8o1, 3->8n1	0
4102	RW	0..5	Baud rate: 0->4800, 1->9600 2->19200, 3->38400, 4->57600, 5->115200	1
4103	RW		reserved	
4104	RW	0.1	Upgrade change of transmission parameters	0
4105	RW		reserved	
:	:	:	:::::::	:
4130	RW	0,1	Enabling / disabling the DHCP Client (supports automatic obtaining of IP protocol parameters of the meter's Ethernet interface from external DHCP servers in the same LAN) 0 - DHCP disabled - you should manually configure the IP address and subnet mask of the meter; 1 - DHCP enabled, the meter will automatically receive the IP address, subnet mask, and gateway address from the DHCP server when switching the supply on or selecting APPL option from the menu or entering the value "1" to the register 4099. The gateway address is the address of the server that assigned the parameters to the meter;	1
4131	RW	0…65535	The third and the second byte (B3.B2) of the IP address of the meter, the IPv4 address format: B3.B2.B1.B0	49320 (0xC0A8 = 192.168)
4132	RW	0…65535	The first and zero byte (B1.B0) of the IP address of the meter, the IPv4 address format: B3.B2.B1.B0	356 (0x0164 = 1.100)
4133	RW	0…65535	The third and the second byte (B3.B2) of the subnet mask of the meter, the mask format: B3.B2.B1.B0	65535
4134	RW	0…65535	The first and zero byte (B1.B0) of the subnet mask of the meter, the mask format: B3.B2.B1.B0	65280
4135	RW	0…65535	The third and the second byte (B3.B2) of the default gate-way of the meter, the gateway address format: B3.B2.B1.B0	49320
4136	RW	0…65535	The first and zero byte (B1.B0) of the default gateway of the meter, the gateway address format: B3.B2.B1.B0	257
4137	RW	0…65535	The third and the second byte (B3.B2) of the DNS address of the meter, the IPv4 address format: B3.B2.B1.B0	0x0808=8.8
4138	RW	0…65535	The first and zero byte (B1.B0) of the DNS address of the meter, the IPv4 address format: B3.B2.B1.B0	0x0808=8.8
4139	RW		reserved	

4140	RW		reserved	
4141	RW	0 .. 2	Baud rate of the Ethernet interface: 0 – automatic selection of the baud rate 1 – 10 Mb/s 2 – 100 Mb/s	0
4142	RW	20...65535	FTP server command port number	21
4143	RW	20...65535	FTP server data port number	1025
4144	RW	1...4	Maximum number of simultaneous connections with the Modbus TCP / IP service	1
4145	RW	10...600	Modbus TCP / IP service port closing time, value expressed in seconds	60
4146	RW	0...255	Device address for Modbus TCP / IP protocol	1
4147	RW	0...65535	Modbus TCP port number	502
4148	RW	80...65535	The server's port number	80
4149	RW	0,1	Saving the new parameters and initiate Ethernet interface 0 – no changes 1 - saving the new parameters and initiate the Ethernet interface	0
4150	RW	0..2	Menu language: 0-ENG, 1-PL, 2-DE	0
4151	RW	0,1	reserved	0
4152	RW	0.1	Saving default parameters (complete with resetting energy as well as min, max and mean power to 0) and Ethernet,	0
4153	RW	0..59	Seconds	0
4154	RW	0…2359	Hour *100 + minutes	0
4155	RW	101…1231	Month * 100 + day	101
4156	RW	2015…2077	Year	2015
4157	RW		reserved	
4158	RW		reserved	
4159	RW		reserved	

The values of switching the alarm conditions saved in registers 4036, 4037, 4054, 4055, 4067, 4068, 4076, 4077, 4085, 4086 are multiplied by 10, e.g. the value 100% should be written "1000".

Table 17

Register address	Operations	Range	Description	Default
4200	RW	7500 .. 7957	Register 1 of programmable group of registers for readout	7500
4201	RW	7500 .. 7957	Register 2 of programmable group of registers for readout	7501
4202	RW	7500 .. 7957	Register 3 of programmable group of registers for readout	7502
4203	RW	7500 .. 7957	Register 4 of programmable group of registers for readout	7503
4204	RW	7500 .. 7957	Register 5 of programmable group of registers for readout	7504
4205	RW	7500 .. 7957	Register 6 of programmable group of registers for readout	7505
4206	RW	7500 .. 7957	Register 7 of programmable group of registers for readout	7506
4207	RW	7500 .. 7957	Register 8 of programmable group of registers for readout	7507
4208	RW	7500 .. 7957	Register 9 of programmable group of registers for readout	7508
4209	RW	7500 .. 7957	Register 10 of programmable group of registers for readout	7509
4210	RW	7500 .. 7957	Register 11 of programmable group of registers for readout	7510
4211	RW	7500 .. 7957	Register 12 of programmable group of registers for readout	7511
4212	RW	7500 .. 7957	Register 13 of programmable group of registers for readout	7512
4213	RW	7500 .. 7957	Register 14 of programmable group of registers for readout	7513
4214	RW	7500 .. 7957	Register 15 of programmable group of registers for readout	7514
4215	RW	7500 .. 7957	Register 16 of programmable group of registers for readout	7515
4216	RW	7500 .. 7957	Register 17 of programmable group of registers for readout	7516
4217	RW	7500 .. 7957	Register 18 of programmable group of registers for readout	7517
4218	RW	7500 .. 7957	Register 19 of programmable group of registers for readout	7518
4219	RW	7500 .. 7957	Register 20 of programmable group of registers for readout	7519
4220	RW	7500 .. 7957	Register 21 of programmable group of registers for readout	7520
4221	RW	7500 .. 7957	Register 22 of programmable group of registers for readout	7521
4222	RW	7500 .. 7957	Register 23 of programmable group of registers for readout	7522
4223	RW	7500 .. 7957	Register 24 of programmable group of registers for readout	7523
4224	RW	7500 .. 7957	Register 25 of programmable group of registers for readout	7524
4225	RW	7500 .. 7957	Register 26 of programmable group of registers for readout	7525
4226	RW	7500 .. 7957	Register 27 of programmable group of registers for readout	7526
4227	RW	7500 .. 7957	Register 28 of programmable group of registers for readout	7527
4228	RW	7500 .. 7957	Register 29 of programmable group of registers for readout	7528
4229	RW	7500 .. 7957	Register 30 of programmable group of registers for readout	7529
4230	RW	7500 .. 7957	Register 31 of programmable group of registers for readout	7530
4231	RW	7500 .. 7957	Register 32 of programmable group of registers for readout	7531

Register address	Operations	Range	Description	Default
4232	RW	7500 .. 7957	Register 33 of programmable group of registers for readout	7532
4233	RW	7500 .. 7957	Register 34 of programmable group of registers for readout	7533
4234	RW	7500 .. 7957	Register 35 of programmable group of registers for readout	7534
4235	RW	7500 .. 7957	Register 36 of programmable group of registers for readout	7535
4236	RW	7500 .. 7957	Register 37 of programmable group of registers for readout	7536
4237	RW	7500 .. 7957	Register 38 of programmable group of registers for readout	7537
4238	RW	7500 .. 7957	Register 39 of programmable group of registers for readout	7538
4239	RW	7500 .. 7957	Register 40 of programmable group of registers for readout	7539
4240	RW	7500 .. 7957	Register 41 of programmable group of registers for readout	7540
4241	RW	7500 .. 7957	Register 42 of programmable group of registers for readout	7541
4242	RW	7500 .. 7957	Register 43 of programmable group of registers for readout	7542
4243	RW	7500 .. 7957	Register 44 of programmable group of registers for readout	7543
4244	RW	7500 .. 7957	Register 45 of programmable group of registers for readout	7544
4245	RW	7500 .. 7957	Register 46 of programmable group of registers for readout	7545
4246	RW	7500 .. 7957	Register 47 of programmable group of registers for readout	7546
4247	RW	7500 .. 7957	Register 48 of programmable group of registers for readout	7547
4248	RW	7500 .. 7957	Register 49 of programmable group of registers for readout	7548
4249	RW	7500 .. 7957	Register 50 of programmable group of registers for readout	7549
4250	RW	7500 .. 7957	Register 51 of programmable group of registers for readout	7550
4251	RW	7500 .. 7957	Register 52 of programmable group of registers for readout	7551
4252	RW	7500 .. 7957	Register 53 of programmable group of registers for readout	7552
4253	RW	7500 .. 7957	Register 54 of programmable group of registers for readout	7553
4254	RW	7500 .. 7957	Register 55 of programmable group of registers for readout	7554
4255	RW	7500 .. 7957	Register 56 of programmable group of registers for readout	7559
4256	RW	7500 .. 7957	Register 57 of programmable group of registers for readout	7560
4257	RW	7500 .. 7957	Register 58 of programmable group of registers for readout	7561
4258	RW	7500 .. 7957	Register 59 of programmable group of registers for readout	7566
4259	RW	7500 .. 7957	Register 60 of programmable group of registers for readout	7567
4260	RW	0,1	Restore default group 0 – no changes, 1 – restore default group	0

Table 18

16-bit register address 2x16 1032/ 2x16 3210	Register address 32-bit	Operations	Description
7200/7000	7400	R	Content of the register set in the registers 4200
7202/7002	7401	R	Content of the register set in the registers 4201
7204/7004	7402	R	Content of the register set in the registers 4202
7206/7006	7403	R	Content of the register set in the registers 4203
7208/7008	7404	R	Content of the register set in the registers 4204
7210/7010	7405	R	Content of the register set in the registers 4205
7212/7012	7406	R	Content of the register set in the registers 4206
7214/7014	7407	R	Content of the register set in the registers 4207
7216/7016	7408	R	Content of the register set in the registers 4208
7218/7018	7409	R	Content of the register set in the registers 4209
7220/7020	7410	R	Content of the register set in the registers 4210
7222/7022	7411	R	Content of the register set in the registers 4211
7224/7024	7412	R	Content of the register set in the registers 4212
7226/7026	7413	R	Content of the register set in the registers 4213
7228/7028	7414	R	Content of the register set in the registers 4214
7230/7030	7415	R	Content of the register set in the registers 4215
7232/7032	7416	R	Content of the register set in the registers 4216
7234/7034	7417	R	Content of the register set in the registers 4217
7236/7036	7418	R	Content of the register set in the registers 4218
7238/7038	7419	R	Content of the register set in the registers 4219
7240/7040	7420	R	Content of the register set in the registers 4220
7242/7042	7421	R	Content of the register set in the registers 4221
7244/7044	7422	R	Content of the register set in the registers 4222
7246/7046	7423	R	Content of the register set in the registers 4223
7248/7048	7424	R	Content of the register set in the registers 4224
7250/7050	7425	R	Content of the register set in the registers 4225
7252/7052	7426	R	Content of the register set in the registers 4226
7254/7054	7427	R	Content of the register set in the registers 4227
7256/7056	7428	R	Content of the register set in the registers 4228
7258/7058	7429	R	Content of the register set in the registers 4229
7260/7060	7430	R	Content of the register set in the registers 4230

7262/7062	7431	R	Content of the register set in the registers 4231
7264/7064	7432	R	Content of the register set in the registers 4232
7266/7066	7433	R	Content of the register set in the registers 4233
7268/7068	7434	R	Content of the register set in the registers 4234
7270/7070	7435	R	Content of the register set in the registers 4235
7272/7072	7436	R	Content of the register set in the registers 4236
7274/7074	7437	R	Content of the register set in the registers 4237
7276/7076	7438	R	Content of the register set in the registers 4238
7278/7078	7439	R	Content of the register set in the registers 4239
7280/7080	7440	R	Content of the register set in the registers 4240
7282/7082	7441	R	Content of the register set in the registers 4241
7284/7084	7442	R	Content of the register set in the registers 4242
7286/7086	7443	R	Content of the register set in the registers 4243
7288/7088	7444	R	Content of the register set in the registers 4244
7290/7090	7445	R	Content of the register set in the registers 4245
7292/7092	7446	R	Content of the register set in the registers 4246
7294/7094	7447	R	Content of the register set in the registers 4247
7296/7096	7448	R	Content of the register set in the registers 4248
7298/7098	7449	R	Content of the register set in the registers 4249
7300/7100	7450	R	Content of the register set in the registers 4250
7302/7102	7451	R	Content of the register set in the registers 4251
7304/7104	7452	R	Content of the register set in the registers 4252
7306/7106	7453	R	Content of the register set in the registers 4253
7308/7108	7454	R	Content of the register set in the registers 4254
7310/7110	7455	R	Content of the register set in the registers 4255
7312/7112	7456	R	Content of the register set in the registers 4256
7314/7114	7457	R	Content of the register set in the registers 4257
7316/7116	7458	R	Content of the register set in the registers 4258
7318/7118	7459	R	Content of the register set in the registers 4259

Table 19

Register address	Operations	Range	Description	Default
4300	RW	0…1	Luminosity: 0 – Off, 1- On	1
4301	RW	0 .. 3600	Time to min. luminosity	0
4302	RW		reserved	
4303	RW	0x0001...0xFFFF	Enabling page display Bit0 – page 1, Bit1 – page 2, ...Bit15 – page 16	0xFFFF
4304	RW	0x0000...0x007F	Enabling page display Bit0 – page 17, Bit1 – page 18, ...Bit6 – page 23	0x007F
4305	RW	00...50	Page 1 display 1, U1	1
4306	RW	00...50	Page 1 display 2, U2	10
4307	RW	00...50	Page 1 display 3, U3	19
4308	RW	00...50	Page 2 display 1, U12	38
4309	RW	00...50	Page 2 display 2, U23	39
4310	RW	00...50	Page 2 display 3, U31	40
4311	RW	00...50	Page 3 display 1, I1	20
4312	RW	00...50	Page 3 display 2, I2	28
4313	RW	00...50	Page 3 display 3, I3	38
4314	RW	00...50	Page 4 display 1, P1	39
4315	RW	00...50	Page 4 display 2, P2	40
4316	RW	00...50	Page 4 display 3, P3	41
4317	RW	00...50	Page 5 display 1, Q1	30
4318	RW	00...50	Page 5 display 2, Q2	31
4319	RW	00...50	Page 5 display 3, Q3	32
4320	RW	00...50	Page 6 display 1, PF1	33
4321	RW	00...50	Page 6 display 2, PF2	3
4322	RW	00...50	Page 6 display 3, PF3	12
4323	RW	00...50	Page 7 display 1, tg1	21
4324	RW	00...50	Page 7 display 2, tg2	30
4325	RW	00...50	Page 7 display 3, tg3	6
4326	RW	00...50	Page 8 display 1, ΣP	15
4327	RW	00...50	Page 8 display 2, ΣQ	24
4328	RW	00...50	Page 8 display 3, ΣS	33
4329	RW	00...50	Page 9 display 1, U avg	3

Register address	Operations	Range	Description	Default
4330	RW	00...50	Page 9 display 2, I avg	12
4331	RW	00...50	Page 9 display 3, I(N)	21
4332	RW	00...50	Page 10 display 1, PFavg	30
4333	RW	00...50	Page 10 display 2, tgavg	4
4334	RW	00...50	Page 10 display 3, f	13
4335	RW	00...50	Page 11 display 1, U1	22
4336	RW	00...50	Page 11 display 2, I1	31
4337	RW	00...50	Page 11 display 3, P1	8
4338	RW	00...50	Page 12 display 1, Q1	17
4339	RW	00...50	Page 12 display 2, S1	26
4340	RW	00...50	Page 12 display 3, PF1	35
4341	RW	00...50	Page 13 display 1, U2	9
4342	RW	00...50	Page 13 display 2, I2	18
4343	RW	00...50	Page 13 display 3, P2	27
4344	RW	00...50	Page 14 display 1, Q2	36
4345	RW	00...50	Page 14 display 2, S2	1
4346	RW	00...50	Page 14 display 3, PF2	2
4347	RW	00...50	Page 15 display 1, U3	3
4348	RW	00...50	Page 15 display 2, I3	4
4349	RW	00...50	Page 15 display 3, P3	5
4350	RW	00...50	Page 16 display 1, Q3	6
4351	RW	00...50	Page 16 display 2, S3	7
4352	RW	00...50	Page 16 display 3, PF3	37
4353	RW	00...50	Page 17 display 1, P DMD	10
4354	RW	00...50	Page 17display 2, S DMD	11
4355	RW	00...50	Page 17display 3, I DMD	12
4356	RW	00...50	Page 18 display 1, ΣP	13
4357	RW	00...50	Page 18 display 2, En P+	14
4358	RW	00...50	Page 18 display 3, En P-	15
4359	RW	00...50	Page 19 display 1, ΣQ	16
4360	RW	00...50	Page 19 display 2, EnQL	37
4361	RW	00...50	Page 19 display 3, EnQC	19
4362	RW	00...50	Page 20 display 1, ΣS	20

Register address	Operations	Range	Description	Default
4363	RW	00...50	Page 20 display 2, En S	21
4364	RW	00...50	Page 20 display 3, f	22
4365	RW	00...50	Page 21 display 1, TH U1	23
4366	RW	00...50	Page 21 display 2, TH U2	24
4367	RW	00...50	Page 21 display 3, TH U3	25
4368	RW	00...50	Page 22 display 1, TH I1	37
4369	RW	00...50	Page 22 display 2, TH I2	30
4370	RW	00...50	Page 22 display 3, TH I3	31
4371	RW	00...50	reserved	29
4372	RW	00...50	reserved	45
4373	RW	00...50	reserved	42
4374	RW	00...50	reserved	43
4375	RW	00...50	reserved	44
4376	RW	00...50	reserved	37
4377	RW	00...50	reserved	30
4378	RW	00...50	reserved	31
4379	RW	00...50	reserved	32
4380	RW	00...50	reserved	52
4381	RW	00...50	reserved	48
4382	RW	00...50	reserved	49
4383	RW	00...50	reserved	50
4384	RW	00...50	reserved	51
4385	RW	0..3	Restore factory pages 0 - no 1 - 3Ph/4W 2 - 3Ph/3W 3 - 1PH/2W	0
4386	RW		reserved	
4387	RW		reserved	
4388	RW		reserved	

Table 20

Register address	Operations	Range	Description	Default
4400	R		reserved	
4401	R	0..65535	Identifier	E6
4402	R	0..65535	Bootloader version x 100	-
4403	R	0..65535	Program version x100	-
4404	R		reserved	
4405	R	0..65535	Ordering codes	-
4406	R	0..65535	Nominal voltage x10	577/2300
4407	R	0..65535	Nominal voltage x10	1000/4000
4408	R	0..65535	Nominal current (1 A) x 100	100/6300
4409	R	0..65535	Nominal current (5 A) x 100	500/6300
4410	R		reserved	
4411	R	0..65535	Seventh and sixth byte (B7.B6) of a serial number, format B7:B6:B5:B4:B3:B2:B1:B0	-
4412	R	0..65535	Fifth and fourth byte (B5.B4) of a serial number, format B7:B6:B5:B4:B3:B2:B1:B0	-
4413	R	0..65535	Third and second byte (B3.B2) of a serial number, format B7:B6:B5:B4:B3:B2:B1:B0	-
4414	R	0..65535	First and zero byte (B1.B0) of a serial number, format B7:B6:B5:B4:B3:B2:B1:B0	-
4415	R	0..65535	Status 1 Register – see description below	0
4416	R	0..65535	Status 2 Register – see description below	0
4417	R	0..65535	Status 3 Register – see description below	0
4418	R	0..65535	Status 4 Register – see description below	0
4419	R	0..65535	Status 5 Register – see description below	0
4420	R	0..65535	Status 6 Register – see description below	0
4421	R	0…65535	Fifth and fourth byte (B5.B4) of MAC address of the meter, format B5:B4:B3:B2:B1:B0	-
4422	R	0…65535	Third and second byte (B3.B2) of MAC address of the meter, format B5:B4:B3:B2:B1:B0	-
4423	R	0…65535	The fifth and fourth byte (B1.B0) of MAC address of the meter, format B5:B4:B3:B2:B1:B0	-
4424	R	0…65535	Status 7 Register – see description below	0
4425	R		reserved	0
4426	R	0..152	Active import energy, two older bytes	0
4427	R	0..65535	Active import energy, two younger bytes	0

4428	R	0..152	Active export energy, two older bytes	0
4429	R	0..65535	Active export energy, two younger bytes	0
4430	R	0..152	Reactive inductive energy, two older bytes	0
4431	R	0..65535	Reactive inductive energy, two younger bytes	0
4432	R	0..152	Reactive capacity energy, two older bytes	0
4433	R	0..65535	Reactive capacity energy, two younger bytes	0
4434	R	0..152	Apparent energy, two older bytes	0
4435	R	0..65535	Apparent energy , two younger bytes	0
4436	R		reserved	
4437	R		reserved	
4438	R		reserved	-
4439	R		reserved	-
4440	R		reserved	
:	:		:::::::	
4446	R		reserved	
4447	R		reserved	0
...				
4461	R		reserved	0
4462	R	0..152	Active imported 3-phase energy for the previous year, two older bytes	0
4463	R	0..65535	Active imported 3-phase energy for the previous year, two younger bytes	0
4464	R	0..152	Active exported 3-phase energy for the previous year, two older bytes	0
4465	R	0..65535	Active exported 3-phase energy for the previous year, two younger bytes	0
4466	R	0..152	Active imported 3-phase energy for the current year, two older bytes	0
4467	R	0..65535	Active imported 3-phase energy for the current year, two younger bytes	0
4468	R	0..152	Active exported 3-phase energy for the current year, two older bytes	0
4469	R	0..65535	Active exported 3-phase energy for the current year, two younger bytes	0
4470	R	0..152	Active imported 3-phase energy for the current month, two older bytes	0
4471	R	0..65535	Active imported 3-phase energy for the current month, two younger bytes	0
4472	R	0..152	Active exported 3-phase energy for the current month,	0

			two older bytes	
4473	R	0..65535	Active exported 3-phase energy for the current month, two younger bytes	0
4474	R	0..152	Active imported 3-phase energy for the current week, two older bytes	0
4475	R	0..65535	Active imported 3-phase energy for the current week, two younger bytes	0
4476	R	0..152	Active exported 3-phase energy for the current week, two older bytes	0
4477	R	0..65535	Active exported 3-phase energy for the current week, two younger bytes	0
4478	R	0..152	Active imported 3-phase energy for the current 48 hours, two older bytes	0
4479	R	0..65535	Active imported 3-phase energy for the current 48 hours, two younger bytes	0
4480	R	0..152	Active exported 3-phase energy for the current 48 hours, two older bytes	0
4481	R	0..65535	Active exported 3-phase energy for the current 48 hours, two younger bytes	0
4482	R	0..152	Active imported 3-phase energy for the current 24 hours, two older bytes	0
4483	R	0..65535	Active imported 3-phase energy for the current 24 hours, two younger bytes	0
4484	R	0..152	Active exported 3-phase energy for the current 24 hours, two older bytes	0
4485	R	0..65535	Active exported 3-phase energy for the current 24 hours, two younger bytes	0

Energy is made available in hundreds of watt-hours (var-hours) in double 16-bit register, and for this reason, you should divide them by 100 when calculating values of particular energy from registers, e.g.:
Active import energy = (reg. value 4426 x 65536 + reg. value 4427) / 100 [kWh]
Active export energy = (reg. value 4428 x 65536 + reg. value 4429) / 100 [kWh]
Reactive inductive energy = (reg. value 4430 x 65536 + reg. value 4431) / 100 [kVarh]
Reactive capacity energy = (reg. value 4432 x 65536 + reg. value 4433) / 100 [kVarh]
Apparent energy = (reg. value 4434 x 65536 + reg. value 4435) / 100 [kVAh]
Similarly, energy from registers 4462 to 4485 should be converted

Status 1 Register of a device (address 4415, R):

Bit 15 – "1" – FRAM memory damage

Bit 14 – "1" – no calibration of the input

Bit 13 – reserved

Bit 12 – reserved

Bit 11 – "1" – error in configuration registers

Bit 10 – "1" – error in displayed pages registers

Bit 9 – "1" – error in registers for configuration of programmable group of registers for readout

Bit 8 – "1" – energy value error

Bit 7 – "1" – phase sequence error

Bit 6 – reserved

Bit 5 – reserved

Bit 4 – reserved

Bit 3 – reserved

Bit 2 – "1" – present Ethernet and internal memory

Bit 1 – "1" – used battery of RTC

Bit 0 – reserved

Status 2 Register – (address 4416, R):

Bit 15 – "1" – condition 3 for alarm 2 signalization
Bit 14 – "1" – condition 2 for alarm 2 signalization
Bit 13 – "1" – condition 1 for alarm 2 signalization
Bit 12 – "1" – alarm 2 signalization
Bit 11 – "1" – alarm 2 condition 3 activated
Bit 10 – "1" – alarm 2 condition 2 activated
Bit 9 – "1" – alarm 2 condition 1 activated
Bit 8 – "1" – alarm 2 activated

Bit 7 – "1" – condition 3 for alarm 1 signalization
Bit 6 – "1" – condition 2 for alarm 1 signalization
Bit 5 – "1" – condition 1 for alarm 1 signalization
Bit 4 – "1" – alarm 1 signalization
Bit 3 – "1" – alarm 1 condition 3 activated
Bit 2 – "1" – alarm 1 condition 2 activated
Bit 1 – "1" – alarm 1 condition 1 activated
Bit 0 – "1" – alarm 1 activated

Status 3 Register – (address 4417, R): Files archive status

Bit 15 – Ethernet connected
Bit 14 ...0 – reserved

Status 4 Register – (address 4418, R) reactive power characteristics:

Bit 15 – reserved
Bit 14 – "1" - Demand- capacity 3L maximum
Bit 13 – "1" - Demand- capacity 3L minimum
Bit 12 – "1" - Demand- capacity 3L
Bit 11 – "1" – capacity 3L maximum
Bit 10 – "1" – capacity 3L minimum
Bit 9 – "1" – capacity 3L
Bit 8 – "1" – capacity L3 maximum

Bit 7 – "1" – capacity L3 minimum
Bit 6 – "1" – capacity L3
Bit 5 – "1" – capacity L2 maximum
Bit 4 – "1" – capacity L2 minimum
Bit 3 – "1" – capacity L2
Bit 2 – "1" – capacity L1 maximum
Bit 1 – "1" – capacity L1 minimum
Bit 0 – "1" – capacity L1

Status 5 Register – (address 4419, R)

Bit 8 – "1" – alarm 1, condition 3 for phase L3 active
Bit 7 – "1" – alarm 1, condition 3 for phase L2 active
Bit 6 – "1" – alarm 1, condition 3 for phase L1 active
Bit 5 – "1" – alarm 1, condition 2 for phase L3 active
Bit 4 – "1" – alarm 1, condition 2 for phase L2 active
Bit 3 – "1" – alarm 1, condition 2 for phase L1 active
Bit 2 – "1" – alarm 1, condition 1 for phase L3 active
Bit 1 – "1" – alarm 1, condition 1 for phase L2 active
Bit 0 – "1" – alarm 1, condition 1 for phase L1 active

Status 6 Register – (address 4420, R)

Bit 8 – "1" – alarm 2, condition 3 for phase L3 active
Bit 7 – "1" – alarm 2, condition 3 for phase L2 active
Bit 6 – "1" – alarm 2, condition 3 for phase L1 active
Bit 5 – "1" – alarm 2, condition 2 for phase L3 active
Bit 4 – "1" – alarm 2, condition 2 for phase L2 active
Bit 3 – "1" – alarm 2, condition 2 for phase L1 active
Bit 2 – "1" – alarm 2, condition 1 for phase L3 active
Bit 1 – "1" – alarm 2, condition 1 for phase L2 active
Bit 0 – "1" – alarm 2, condition 1 for phase L1 active

Status 7 Register – (address 4424, R):

Bit 8 ...0 – reserved

Table 21

16-bit register address 2x16 1032/ 2x16 3210	Register address 32-bit	Operations	Description	Unit	3Ph / 4W	3Ph / 3W	1Ph / 2W
6000/8000	7500	R	L1 phase voltage	V	√	x	√
6002/8002	7501	R	L1 phase current	A	√	√	√
6004/8004	7502	R	L1 phase active power	W	√	x	√
6006/8006	7503	R	L1 phase reactive power	VAr	√	x	√
6008/8008	7504	R	L1 phase apparent power	VA	√	x	√
6010/8010	7505	R	L1 phase active power factor (PF1=P1/S1)	-	√	x	√
6012/8012	7506	R	tgφ factor of L1 phase (tg1=Q1/P1)	-	√	x	√
6014/8014	7507	R	THD U1*	%	√	x	√
6016/8016	7508	R	THD I1	%	√	x	√
6018/8018	7509	R	L2 phase voltage	V	√	x	x
6020/8020	7510	R	L2 phase current	A	√	√	x
6022/8022	7511	R	L2 phase active power	W	√	x	x
6024/8024	7512	R	L2 phase reactive power	VAr	√	x	x
6026/8026	7513	R	L2 phase apparent power	VA	√	x	x
6028/8028	7514	R	L2 phase active power factor (PF2=P2/S2)	-	√	x	x
6030/8030	7515	R	tgφ factor of L2 phase (tg2=Q2/P2)	-	√	x	x
6032/8032	7516	R	THD U2*	%	√	x	x
6034/8034	7517	R	THD I2	%	√	x	x
6036/8036	7518	R	L3 phase voltage	V	√	x	x
6038/8038	7519	R	L3 phase current	A	√	√	x
6040/8040	7520	R	L3 phase active power	W	√	x	x
6042/8042	7521	R	L3 phase reactive power	VAr	√	x	x
6044/8044	7522	R	L3 phase apparent power	VA	√	x	x
6046/8046	7523	R	L3 phase active power factor (PF3=P3/S3)	-	√	x	x
6048/8048	7524	R	tgφ factor of L3 phase (tg3=Q3/P3)	-	√	x	x
6050/8050	7525	R	THD U3*	%	√	x	x
6052/8052	7526	R	THD I3	%	√	x	x
6054/8054	7527	R	Mean 3-phase voltage	V	√	x	x

6056/8056	7528	R	Mean 3-phase current	A	√	√	x
6058/8058	7529	R	3-phase active power (P1+P2+P3)	W	√	√	x
6060/8060	7530	R	3-phase reactive power (Q1+Q2+Q3)	VAr	√	√	x
6062/8062	7531	R	3-phase apparent power (S1+S2+S3)	VA	√	√	x
6064/8064	7532	R	3-phase active power factor (PF=P/S)	-	√	√	x
6066/8066	7533	R	Mean tg factor φ for 3 phases (tg=Q/P)	-	√	√	x
6068/8068	7534	R	THD U* mean 3-phase	%	√	x	x
6070/8070	7535	R	THD I mean 3-phase	%	√	x	x
6072/8072	7536	R	Frequency	f	√	√	√
6074/8074	7537	R	Phase-to-phase voltage L_{1-2}	V	√	√	x
6076/8076	7538	R	Phase-to-phase voltage L_{2-3}	V	√	√	x
6078/8078	7539	R	Phase-to-phase voltage L_{3-1}	V	√	√	x
6080/8080	7540	R	Mean phase-to-phase voltage	V	√	√	x
6082/8082	7541	R	Active power averaged (P Demand)	W	√	√	x
6084/8084	7542	R	Reactive power averaged (S Demand)	VA	√	√	x
6086/8086	7543	R	Current averaged (I Demand)	A	√	√	x
6088/8088	7544	R	Neutral wire current (calculated from vectors)	A	√	x	x
6090/8090	7545	R	Active 3-phase import energy (no. of register 7546 overflows, resets to 0 after reaching 9999.9 MWh)	100 MWh	√	√	√
6092/8092	7546	R	Active 3-phase import energy (counter counting up to 99999.99 kWh)	kWh	√	√	√
6094/8094	7547	R	Active 3-phase export energy (no. of register 7548 overflows, resets to 0 after reaching 9999.9 MWh)	100 MWh	√	√	√
6096/8096	7548	R	Active 3-phase export energy (counter counting up to 99999.99 kWh)	kWh	√	√	√
6098/8098	7549	R	Reactive 3-phase inductive energy (no. of register 7550 overflows, resets to 0 after reaching 9999.9 MVArh).	100 MVArh	√	√	√
6100/8100	7550	R	Reactive 3-phase inductive energy (counter counting up to 99999.99 kVArh)	kVArh	√	√	√
6102/8102	7551	R	Reactive 3-phase capacity energy (no. of register 7552 overflows, resets to 0 after reaching 9999.9 MVArh)	100 MVArh	√	√	√
6104/8104	7552	R	Reactive 3-phase capacity energy (counter counting up to 99999.99 kVArh)	kVArh	√	√	√
6106/8106	7553	R	Apparent energy (no. of register 7554 overflows, resets to 0 after reaching 9999.9 MVAh)	100 MVAh	√	√	√
6108/8108	7554	R	Apparent energy (counter counting up to 99999.99 kVAh)	kVAh	√	√	√

6110/8110	7555	R	Time – seconds	sec	√	√	√
6112/8112	7556	R	Time – hours, minutes		√	√	√
6114/8114	7557	R	Date – month, day		√	√	√
6116/8116	7558	R	Year – 2014 - 2100		√	√	√
6118/8118	7559	R	Status 1 register	-	√	√	√
6120/8120	7560	R	Status 2 register	-	√	√	√
6122/8122	7561	R	Status 3 register	-	√	√	√
6124/8124	7562	R	Status 4 register	-	√	√	√
6126/8126	7563	R	Status 5 register	-	√	√	√
6128/8128	7564	R	Status 6 register	-	√	√	√
6130/8130	7565	R	reserved	-	-	-	-
6132/8132	7566	R	reserved	-	-	-	-
6134/8134	7567	R	reserved	-	-	-	-
6136/8136	7568	R	Voltage L1 min	V	√	x	√
6138/8138	7569	R	Voltage L1 max	V	√	x	√
6140/8140	7570	R	Voltage L2 min	V	√	x	x
6142/8142	7571	R	Voltage L2 max	V	√	x	x
6144/8144	7572	R	Voltage L3 min	V	√	x	x
6146/8146	7573	R	Voltage L3 max	V	√	x	x
6148/8148	7574	R	Current L1 min	A	√	√	x
6150/8150	7575	R	Current L1 max	A	√	√	x
6152/8152	7576	R	Current L2 min	A	√	√	x
6154/8154	7577	R	Current L2 max	A	√	√	x
6156/8156	7578	R	Current L3 min	A	√	√	x
6158/8158	7579	R	Current L3 max	A	√	√	x
6160/8160	7580	R	Active power L1 min	W	√	x	√
6162/8162	7581	R	Active power L1 max	W	√	x	√
6164/8164	7582	R	Active power L2 min	W	√	x	x
6166/8166	7583	R	Active power L2 max	W	√	x	x
6168/8168	7584	R	Active power L3 min	W	√	x	x
6170/8170	7585	R	Active power L3 max	W	√	x	x
6172/8172	7586	R	Reactive power L1 min	Var	√	x	√
6174/8174	7587	R	Reactive power L1 max	Var	√	x	√
6176/8176	7588	R	Reactive power L2 min	Var	√	x	x
6178/8178	7589	R	Reactive power L2 max	Var	√	x	x

6180/8180	7590	R	Reactive power L3 min	Var	√	x	x
6182/8182	7591	R	Reactive power L3 max	Var	√	x	x
6184/8184	7592	R	Apparent power L1 min	VA	√	x	√
6186/8186	7593	R	Apparent power L1 max	VA	√	x	√
6188/8188	7594	R	Apparent power L2 min	VA	√	x	x
6190/8190	7595	R	Apparent power L2 max	VA	√	x	x
6192/8192	7596	R	Apparent power L3 min	VA	√	x	x
6194/8194	7597	R	Apparent power L3 max	VA	√	x	x
6196/8196	7598	R	Power factor (PF) L1 min	-	√	x	√
6198/8198	7599	R	Power factor (PF) L1 max	-	√	x	√
6200/8200	7600	R	Power factor (PF) L2 min	-	√	x	x
6202/8202	7601	R	Power factor (PF) L2 max	-	√	x	x
6204/8204	7602	R	Power factor (PF) L3 min	-	√	x	x
6206/8206	7603	R	Power factor (PF) L3 max	-	√	x	x
6208/8208	7604	R	Reactive to active power ratio L1 min	-	√	x	√
6210/8210	7605	R	Reactive to active power ratio L1 max	-	√	x	√
6212/8212	7606	R	Reactive to active power ratio L1 min	-	√	x	x
6214/8214	7607	R	Reactive to active power ratio L2 max	-	√	x	x
6216/8216	7608	R	Reactive to active power ratio L3 min	-	√	x	x
6218/8218	7609	R	Reactive to active power ratio L3 max	-	√	x	x
6220/8220	7610	R	Phase-to-phase voltage L_{1-2} min	V	√	√	x
6222/8222	7611	R	Phase-to-phase voltage L_{1-2} max	V	√	√	x
6224/8224	7612	R	Phase-to-phase voltage L_{2-3} min	V	√	√	x
6226/8226	7613	R	Phase-to-phase voltage L_{2-3} max	V	√	√	x
6228/8228	7614	R	Phase-to-phase voltage L_{3-1} min	V	√	√	x
6230/8230	7615	R	Phase-to-phase voltage L_{3-1} max	V	√	√	x
6232/8232	7616	R	Mean 3-phase voltage (min)	V	√	x	x
6234/8234	7617	R	Mean 3-phase voltage (max)	V	√	x	x
6236/8236	7618	R	Mean 3-phase current (min)	A	√	√	x
6238/8238	7619	R	Mean 3-phase current (max)	A	√	√	x
6240/8240	7620	R	3-phase active power (min)	W	√	√	x
6242/8242	7621	R	3-phase active power (max)	W	√	√	x
6244/8244	7622	R	3-phase reactive power (min)	var	√	√	x
6246/8246	7623	R	3-phase reactive power (max)	var	√	√	x
6248/8248	7624	R	3-phase apparent power (min)	VA	√	√	x

6250/8250	7625	R	3-phase apparent power (max)	VA	√	√	x
6252/8252	7626	R	Power factor (PF) min	-	√	√	x
6254/8254	7627	R	Power factor (PF) max	-	√	√	x
6256/8256	7628	R	Reactive to active power ratio (3-phase mean min.)	-	√	√	x
6258/8258	7629	R	Reactive to active power ratio (3-phase mean max.)	-	√	√	x
6260/8260	7630	R	Min. frequency	Hz	√	√	√
6262/8262	7631	R	Frequency max	Hz	√	√	√
6264/8264	7632	R	Mean phase-to-phase voltage (min.)	V	√	√	x
6266/8266	7633	R	Mean phase-to-phase voltage (max.)	V	√	√	x
6268/8268	7634	R	Active power averaged (P Demand) min	W	√	√	√
6270/8270	7635	R	Active power averaged (P Demand) max	W	√	√	√
6272/8272	7636	R	Apparent power averaged (S Demand) min	VA	√	√	√
6274/8274	7637	R	Apparent power averaged (S Demand) max	VA	√	√	√
6276/8276	7638	R	Current averaged (I Demand) min	A	√	√	√
6278/8278	7639	R	Current averaged (I Demand) max	A	√	√	√
6280/8280	7640	R	Neutral wire current (min.)	A	√	x	x
6282/8282	7641	R	Neutral wire current (max.)	A	√	x	x
6284/8284	7642	R	reserved	-	-	-	-
6286/8286	7643	R	reserved	-	-	-	-
6288/8288	7644	R	reserved	-	-	-	-
6290/8290	7645	R	reserved	-	-	-	-
6292/8292	7646	R	THD U1 min	%	√	x	√
6294/8294	7647	R	THD U1 max	%	√	x	√
6296/8296	7648	R	THD U2 min	%	√	x	x
6298/8298	7649	R	THD U2 max	%	√	x	x
6300/8300	7650	R	THD U3 min	%	√	x	x
6302/8302	7651	R	THD U3 max	%	√	x	x
6304/8304	7652	R	THD U min	%	√	x	x
6306/8306	7653	R	THD U max	%	√	x	x
6308/8308	7654	R	THD I1 min	%	√	x	√
6310/8310	7655	R	THD I1 max	%	√	x	√
6312/8312	7656	R	THD I2 min	%	√	x	x
6314/8314	7657	R	THD I2 max	%	√	x	x
6316/8316	7758	R	THD I3 min	%	√	x	x
6318/8318	7759	R	THD I3 max	%	√	x	x

6320/8320	7660	R	THD I min	%	√	x	x
6322/8322	7661	R	THD I max	%	√	x	x
6324/8324	7662	R	HarU1[2] 2nd harmonic of L1 phase voltage	%	√	x	√
6326/8326	7663	R	HarU1[3] 3rd harmonic of L1 phase voltage	%	√	x	√
:	:	R	:				
:	:	R	:				
6420/8420	7710	R	HarU1[50] 50th harmonic of L1 phase voltage	%	√	x	√
6422/8422	7711	R	HarU1[51] 51st harmonic of L1 phase voltage	%	√	x	√
6424/8424	7712	R	HarU2[2] 2nd harmonic of L2 phase voltage	%	√	x	x
6426/8426	7713	R	HarU2[3] 3rd harmonic of L2 phase voltage	%	√	x	x
:	:	R	:				
:	:	R	:				
6520/8520	7760	R	HarU2[50] 50th harmonic of L2 phase voltage	%	√	x	x
6522/8522	7761	R	HarU2[51] 51st harmonic of L2 phase voltage	%	√	x	x
6524/8524	7762	R	HarU3[2] 2nd harmonic of L3 phase voltage	%	√	x	x
6526/8526	7763	R	HarU3[3] 3rd harmonic of L3 phase voltage	%	√	x	x
:	:	R	:				
:	:	R	:				
6620/8620	7810	R	HarU3[50] 50th harmonic of L3 phase voltage	%	√	x	x
6622/8622	7811	R	HarU3[51] 51st harmonic of L3 phase voltage	%	√	x	x
6624/8624	7812	R	Harl1U1[2] 2nd harmonic of L1 phase current	%	√	x	√
6626/8626	7813	R	Harl1U1[3] 3rd harmonic of L1 phase current	%	√	x	√
:	:	R	:				
:	:	R	:				
6720/8720	7860	R	Harl1U1[50] 50th harmonic of L1 phase current	%	√	x	√
6722/8722	7861	R	Harl1[51] 51st harmonic of L1 phase current	%	√	x	√
6724/8724	7862	R	Harl2[2] 2nd harmonic of L2 phase current	%	√	x	x
6726/8726	7863	R	Harl2[3] 3rd harmonic of L2 phase current	%	√	x	x
:	:	R	:				
:	:	R	:				
6820/8820	7910	R	Harl2[50] 50th harmonic of L2 phase current	%	√	x	x
6822/8822	7911	R	Harl2[51] 51st harmonic of L2 phase current	%	√	x	x
6824/8824	7912	R	Harl3[2] 2nd harmonic of L3 phase current	%	√	x	x
6826/8826	7913	R	Harl3[3] 3rd harmonic of L3 phase current	%	√	x	x
:	:	R	:				

:	:	R	:				
6920/8920	7960	R	Harl3[50] 50th harmonic of L3 phase current	%	√	x	x
6922/8922	7961	R	Harl3[51] 51st harmonic of L3 phase current	%	√	x	x
6924/8924	7962	R	Mean reactive power	var	√	√	√
6926/8926	7963	R	Mean reactive power min	var	√	√	√
6928/8928	7964	R	Mean reactive power max	var	√	√	√
6930/8930	7965	R	Mean active power factor	-	√	√	√
6932/8932	7966	R	Mean active power factor min	-	√	√	√
6934/8934	7967	R	Mean active power factor max	-	√	√	√
6936/8936	7968	R	Active imported 3-phase energy for the previous year (overflows number of register 7563, reset after 9999.9 MWh is reached)	100 MWh	√	√	√
6938/8938	7969	R	Active imported 3-phase energy for the previous year (counter up to 9999.99 kWh)	kWh	√	√	√
6940/8940	7970	R	Active exported 3-phase energy for the previous year (overflows number of register 7565, reset after 9999.9 MWh is reached)	100 MWh	√	√	√
6942/8942	7971	R	Active exported 3-phase energy for the previous year (counter up to 9999.99 kWh)	kWh	√	√	√
6944/8944	7972	R	Active imported 3-phase energy for the current year (overflows number of register 7567, reset after 9999.9 MWh is reached)	100 MWh	√	√	√
6946/8946	7973	R	Active imported 3-phase energy for the current year (counter up to 9999.99 kWh)	kWh	√	√	√
6948/8948	7974	R	Active exported 3-phase energy for the current year (overflows number of register 7569, reset after 9999.9 MWh is reached)	100 MWh	√	√	√
6950/8950	7975	R	Active exported 3-phase energy for the current year (counter up to 9999.99 kWh)	kWh	√	√	√
6952/8952	7976	R	Active imported 3-phase energy for the current month (overflows number of register 7571, reset after 9999.9 MWh is reached)	100 MWh	√	√	√
6954/8954	7977	R	Active imported 3-phase energy for the current month (counter up to 9999.99 kWh)	kWh	√	√	√
6956/8956	7978	R	Active exported 3-phase energy for the current month (overflows number of register 7573, reset after 9999.9 MWh is reached)	100 MWh	√	√	√
6958/8958	7979	R	Active exported 3-phase energy for the current month (counter up to 9999.99 kWh)	kWh	√	√	√
6960/8960	7980	R	Active imported 3-phase energy for the current week (overflows number of register 7575, reset after 9999.9 MWh is reached)	100 MWh	√	√	√
6962/8962	7981	R	Active imported 3-phase energy for the current week (counter up to 9999.99 kWh)	kWh	√	√	√

6964/8964	7982	R	Active exported 3-phase energy for the current week (overflows number of register 7577, reset after 9999.9 MWh is reached)	100 MWh	√	√	√
6966/8966	7983	R	Active exported 3-phase energy for the current week (counter up to 9999.99 kWh)	kWh	√	√	√
6968/8968	7984	R	Active imported 3-phase energy for the current 48 hours (overflows number of register 7579, reset after 9999.9 MWh is reached)	100 MWh	√	√	√
6970/8970	7985	R	Active imported 3-phase energy for the current 48 hours (counter up to 9999.99 kWh)	kWh	√	√	√
6972/8972	7986	R	Active exported 3-phase energy for the current 48 hours (overflows number of register 7581, reset after 9999.9 MWh is reached)	100 MWh	√	√	√
6974/8974	7987	R	Active exported 3-phase energy for the current 48 hours (counter up to 9999.99 kWh)	kWh	√	√	√
6976/8976	7988	R	Active imported 3-phase energy for the current 24 hours (overflows number of register 7583, reset after 9999.9 MWh is reached)	100 MWh	√	√	√
6978/8978	7989	R	Active imported 3-phase energy for the current 24 hours (counter up to 9999.99 kWh)	kWh	√	√	√
6980/8980	7990	R	Active exported 3-phase energy for the current 24 hours (overflows number of register 7585, reset after 9999.9 MWh is reached)	100 MWh	√	√	√
6982/8982	7991	R	Active exported 3-phase energy for the current 24 hours (counter up to 9999.99 kWh)	kWh	√	√	√

*In the 3-phase 3-wire (3Ph / 3W) respectively THD U12, THD U23, THD U31, THD U123

11 FIRMWARE UPGRADE

11. 1 Firmware upgrade - the main program of the meter

NR30BAC meters have a feature that allows the user to upgrade the software using a PC with eCon software. Free eCon software and update files are available at www.lumel.com.pl. Upgrade of the meter software (firmware) can be done via the RS485 interface. The update is done in LUMEL UPDATER tab.

a) b)

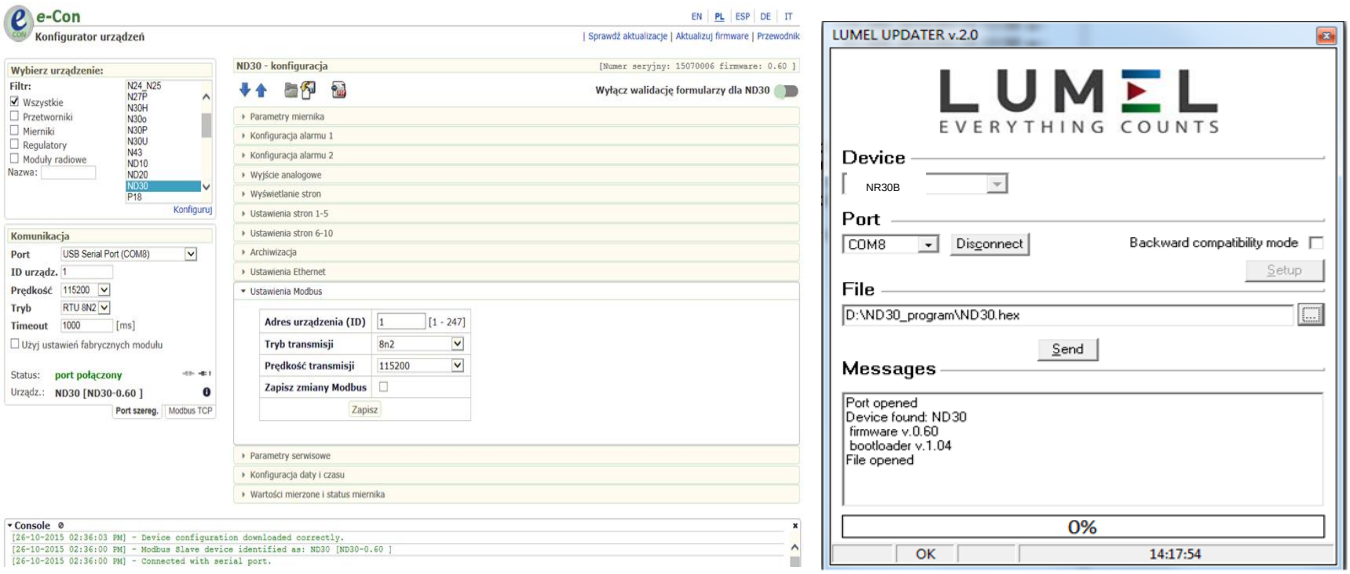

Fig.24. View of program window: a) eCon, b) firmware upgrade

Caution! After upgrading the software, the user should set the factory settings of the meter, thus it is recommended to preserve the initial meter parameters before the upgrade with the use of eCon software.

After starting eCon the serial port, speed, mode and meter address should be set in the settings. Then select NR30BAC meter and click Configure To read all the settings, click the down arrow, then the floppy icon to save the settings to a file (to restore them later). After selecting *Update firmware* (in the upper right corner of the screen) *Lumel Updater* (LU) window will open - Fig. 24.b. Press *Connect*. *Messages* information window contains info about the progress of the upgrade process. When the port is properly opened the display shows: *Port opened*. There are two ways to enter the upgrade mode: remotely through the LU (based on settings in eCon - address, mode, speed, COM port) and by turning on the meter power with the button pushed (when entering the bootloader mode with the button, communication parameters: speed 9600, RTU8N2, address 1). The display will show boot with bootloader version, and LU program will show the message *Device found* and the name and program version of the connected device. Press the „*...*" button and select the meter update file. When the file is properly opened *File opened* message is displayed. Press the Send button. After successful upgrade the meter switches to normal operation, and the information window shows *Done* and the upgrade duration. After closing the LU window, go to *Service Parameters*, select *Set Meter Defaults* and press the *Restore* button. Then press the folder icon to open the previously saved settings file and press the up arrow to save the settings in the meter. The current software version can also be checked by reading the greeting messages of the meter after powering up.

Caution! Turning off the power during the software upgrade may result in permanent damage to the meter!

12 ERROR CODES

During operation of the meter, error messages may appear on the display. The causes of the errors are listed below.

Error:
MEM_FR, CAL_IN – displayed when the memory of the meter is corrupted. The meter must be sent to the manufacturer.
P.CFG – displayed when the operating parameters of the meter are incorrect. The factory settings must be restored (from the menu "Settings -> Set all defaults" or via RS485).
P.PAGE – displayed when the parameters related to the configuration of displayed parameters in the meter are incorrect. The factory settings should be restored (from the menu " Displaying -> Settings -> Set page defaults "or via RS485).
P.READ – displayed when the parameters related to registers from the modbus 42xx group of addresses are incorrect. The factory settings must be restored (from the menu " Modbus -> Set defaults 42xx" or via RS485).
ENERGY – displayed when an error occurs in the value in one of the energy counters of the meter. The factory settings must be restored (from the menu " Parameters -> Del energy counters" or via RS485).

– ^^^^ **–** upper exceeding. The value is measured outside the measurement range.
– vvvv **–** lower exceeding. The value is measured outside the measurement range.

13 TECHNICAL DATA

Measurement ranges and acceptable errors Table 22

Measured quantity	Measuring range	L1	L2	L3	∑	Class
Current I: 1/5 A 1 A~ 5 A~ 63 A~	0,002 ...0,100...1,200 A 0,010 ...0,500... 6.000 A 0.10 ...6.3 ... 70.00 A ...100.00 kA (tr_I≠1)	•	•	•		0.2 (EN 61557-12)
Voltage U L-N: 57.7 V~ 100 V~ 230 V~ 400 V~	5.700...11.500 ...70.000 V 11.000...20.000 ...120.00 V 23.000...46.000 ... 276.00 V 40.000...80.000 … 480.00 V ...1920.0 kV	•	•	•		0.2 (EN 61557-12)
Voltage U L-L: 100 V~ 170 V~ 400 V~ 690 V~	10.000 ...20.000…120.00 V 17.000 ...34.000...204.00 V 40.000...80.00 ... 480.00 V 69.000...138.00 … 830.00 V ...1999.0 kV (tr_U≠1)	•	•	•		0.5 (EN 61557-12)
Active power P	-19999 MW ... 0.000 W ... ...19999 MW (tr_U≠1,tr_I≠1)	•	•	•	•	0.5 (EN 61557-12)
Reactive power Q	-19999 MVar ... 0.000 Var ... …19999 MVar (tr_U≠1,tr_I≠1)	•	•	•	•	1 (EN 61557-12)
Apparent power S	0.000 … 1999.9 VA ... ...19999 MVA (tr_U≠1,tr_I≠1)	•	•	•	•	0.5 (EN 61557-12)
Active energy EnP / imported or exported /	0.0 … 99 999 999. 9 kWh				•	0.2S (EN 62053-22)
Reactive energy EnQ /Inductive or capacitive/	0.0 ... 99 9 999, 999 kVarh				•	1 (EN 61557-12)
Apparent energy EnS	0.0 ... 99 999 999. 9 kVAh				•	0.5 (EN 61557-12)
Power factor active PF	-1.00 ... 0 ... 1.00	•	•	•	•	1 (EN 61557-12)
tg factor	-999.99 ...-1.20 ... 0 ... 1.20...999.,99	•	•	•	•	1
Frequency f	45.000 ...65.000 Hz				•	0.1 (EN 61557-12)

Total harmonic distortion of voltage THDU, and current THDI	0.0 .. 100.0 %	•	•	•	•	5 (EN 61557-12)
Amplitudes of voltage harmonics U_{h2} ...U_{h51} , and current I_{h2} … I_{h51}	0.0 .. 100.0 %	•	•	•		II (IEC61000-4-7)

tr_I - Ratio of current transformer = Primary current of transformer / Secondary current of current transformer,
tr_U - Ratio of voltage transformer = Primary voltage of transformer / Secondary voltage of voltage transformer,

Power consumption:
- in power supply circuit ≤ 6 VA
- in voltage circuit ≤ 0.5 VA
- in current circuit ≤ 0.1 VA (1/5 A); ≤ 2.0 VA (63 A)

Readout field LCD display 20 x 4 rows; white background, black characters

Relay outputs (A1, A2) 2 programmable relays, volt free NO contacts, resistive load 0.5 A/250 V a.c. or 5 A/30 V d.c.
Number of switchings: mechanical minimum 5×10^{6}
electric minimum 1×10^{5}

RS485 serial interface Modbus RTU 8N2,8E1,8O1,8N1. Address 1..247,
Baud rate 4.8, 9.6, 19.2, 38.4, 57.6, 115.2 kbit/s
maximum time to commence the response: 600 ms

Ethernet Interface 10/100 Base-T, RJ45 socket, ICMP (Ping),
BACnet IP (protocol ver. 1, rev. 12)

Sampling A/C converter 16-bit
Sampling rate 6.4 kHz for 50 Hz
7.68 kHz for 60 Hz
Simultaneous sampling across all channels,
128 samples per period

Harmonics Harmonics series (n) 1..51
The harmonic distortion factor referred to the fundamental component of THD voltage, THD current waveform (n=2..51)
0.0 ..100.0 %
FFT analysis (Fast Fourier Transform),

Real-time clock ±20 ppm, battery of real time clock CR1220

Terminals	direct connection (63A)	indirect connection (1/5A)
Cross-section		
wire	2.5 .. 16 mm²	0.2 .. 5.3 mm²
cable	4 .. 16 mm²	0.2 .. 5.3 mm²
Clamping screws	M5	M3.5
Tightening torque	1.2 .. 2.0 Nm	1.0 Nm

Degree of protection provided by housing

from the front side	IP 50
terminals	IP 00

Weight 0.3 kg
Dimensions 105 x 110 x 60 mm

Reference conditions and rated operating conditions.

- power supply	85..253 V a.c. (40..50..400) Hz or 90..300 V d.c. or 20..40 V a.c. or 20..60 V d.c.
- input signal:	0 .. 0.1..1.2I_n for versions 1/5A; 0 .. 0,...1.1I_n for versions 63A; 0.1..0.2..1.2U_n for current, voltage, PF_i ,tg_i frequency 45 ..50 .. 60 .. 65 Hz; sinusoidal (THD ≤ 8%)
- power factor	-1...0...1
- ambient temperature	-10..23..+55 °C, class K55 acc. to EN61557-12
- storage temperature	-20..+70 °C
- humidity	0 .. 40 ..60 ..95 % (no condensation)
- acceptable crest factor :	
- current	2
- voltage	2
- external magnetic field	≤ 40...400 A/m d.c. ≤ 3 A/m a.c. 50/60 Hz
- short-term overload	
voltage inputs 5 sec.	2 Un
voltage inputs 1 sec.	50 A (for versions In 1 A/ 5 A)
1 sec.	630 A (for versions In 63 A)
- operation position	any
- warm-up time	15 min.

Real-time clock battery: CR1220

Additional errors:

in % of intrinsic error

- due to ambient temperature changes < 50 % / 10 °C
- for THD > 8% < 50 %

Standards met by the meter

Electromagnetic compatibility

- immunity in industrial environments EN 61000-6-2

resistance to induced common voltages of radio frequency:

- level 2 in the frequency range of 0.15 .. 1 MHz,
- level 3 in the frequency range of 1 MHz .. 80 MHz,

- noise emission acc. to EN 61000-6-4

Safety requirements:

according to EN 61010-1 standard

- insulation between circuits: basic,
- installation category III for voltages up to 300V in relation to earth
- installation category II for voltages up to 600V in relation to earth
- degree of pollution 2
- maximum operating voltage relative to earth
  - for power circuits and relay outputs 300 V

- for measurement input 500 V
- for RS485, Ethernet circuits, analog outputs: 50 V

- altitude < 2000m

14 ORDERING CODES

Ordering code of NR30BAC meter of power network parameters.

Table 23

Meter of Power Network Parameters	**NR30BAC**	**X**	**X**	**X**	**X**	**XX**	**X**	**X**
Input current In								
1/5 A (X/1; X/5)		1						
63 A		2						
Input voltage (phase/phase-to-phase) Un								
3x57.7/100 V to 3x100/170 V			1					
3x230/400 V to 3x400/690 V			2					
Interfaces								
BACnet IP and RS485 (Modbus RTU)				2				
Power supply								
85..253 V a.c., 90..300 V d.c.					1			
20..40 V a.c., 20..60 V d.c.					2			
Version								
standard						00		
with S4AO*: 4 current outputs 0/4 .. 20 mA						01		
with S4AO*: 4 voltage outputs 0 .. 10 V						02		
with S4AO*: 4 outputs (2 groups 1 x 0..10 V + 1 x 0/4 .. 20 mA)						03		
custom-made**						XX		
Language								
Polish/ English							M	
other**							X	
Acceptance tests:								
without additional requirements								0
with quality inspection certificate								1
with calibration certificate								2
acc. to customer's requirements**								X

* 4-channel S4AO analog output module will be made in English language version with the same power supply as the ordered NR30BAC meter, unless the customer specifies otherwise. The S4AO module communicates with the NR30BAC meter via the RS485 Modbus Master interface, therefore cooperation with S4AO excludes the use the NR30BAC meter RS485 interface for communication with another Master.

**after agreement with the manufacturer

SAMPLE ORDER, code **NR30BAC 112100M0** means:
NR30BAC – NR30BAC meter,
1 – input current 1A/5A (X/1; X/5),
1 – input voltage 3x57.7/100 V to 3x100/170 V,
2 – BACnet IP and RS485 (Modbus RTU),
1 – power supply 85..253 V a.c., 90..300 V d.c.
00 – standard version,
M – Polish-English language version,
0 – without additional requirements.

LUMEL S.A.
ul. Sulechowska 1, 65-022 Zielona Góra, Poland
tel.: +48 68 45 75 100, fax +48 68 45 75 508
www.lumel.com.pl

Export department:
tel.: (+48 68) 45 75 139, 45 75 233, 45 75 321, 45 75 386
fax.: (+48 68) 32 54 091
e-mail: export@lumel.com.pl

Calibration & Attestation:
tel.: (68) 45 75 161
e-mail: laboratorium@lumel.com.pl

NR30BAC-09A