EUROTEC
TECNOLOGIE IMPIANTISTICHE - AUTOMAZIONE - TELECONTROLLO

LUMEL
EVERYTHING COUNTS

DIN RAIL MULTIFUNCTION POWER METER

# NR10

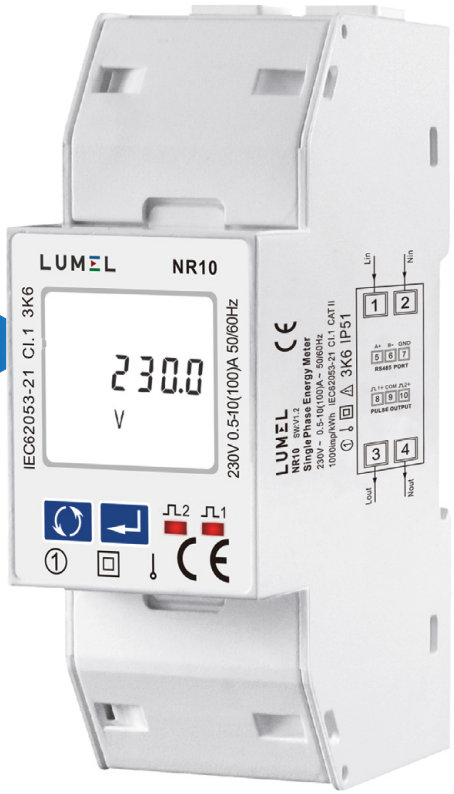


## SERVICE MANUAL

## MODBUS PROTOCOL

CE

# Protocol

1. NR10 Protocol Implementation
    1.1 Modbus Protocol Overview
    1.2 Input register
    1.2.1 NR10 Input Registers
    1.3 Modbus Protocol Holding Registers and Digital meter set up:
    1.3.1 MODBUS Protocol Holding Register Parameters

2 RS485 General Information
    2.1 Half Duplex
    2.2 Connecting the Instruments
    2.3 A and B terminals
    2.4 Troubleshooting

3 MODBUS Protocol General Information
    3.1 MODBUS Protocol Message Format
    3.2 Serial Transmission Modes
    3.3 MODBUS Protocol Message Timing (RTU Mode)
    3.4 How Characters are Transmitted Serially
    3.5 Error Checking Methods
        3.5.1 Parity Checking
        3.5.2 CRC Checking
    3.6 Function Codes
    3.7 IEEE floating point format
    3.8 MODBUS Protocol Commands supported
        3.8.1 Read Input Registers
    3.9 Holding Registers
        3.9.1 Read Holding Registers
        3.9.2 Write Holding Registers
    3.10 Exception Response
    3.11 Exception Codes
        3.11.1 Table of Exception Codes
    3.12 Diagnostics

# 1. NR10 Smart Meter Modbus Protocol Implementation

## 1.1 Modbus Protocol Overview

This section provides basic information for interfacing the Smart meter to a Modbus Protocol network. If background information or more details of the Smart implementation is required please refer to section 2 and 3 of this document.

RS485 is a bidirectional, full or half-duplex communication bus structure consisting of a single Master and at least one Slave. The maximum number of slaves can vary widely from system to system however; most manufacturers cap the max number of slaves between 16 and 32. Most RS485 signals operate ideally on a DC bias of 5 volts. The signals are driven alternately from each other. That is, each line operates inversely from the other and each is also referenced to the other from an electrical standpoint. The receiver looks at the difference, not the absolute voltage value, of the two signals. This is referred to as the "Line Bias" and it is critical in RS-485 applications. A bias difference of higher than 0.3v is generally accepted as valid but can be as high as 0.7v, depending on the system. Absolute values below this are considered "undefined" or "grey" and may result in either a high or low reading by the receiver. In many non-isolated applications, a "signal ground" or "shield" connection is provided in addition to the 2 data lines however, this is not necessary as the signals are referenced to each other and not to absolute ground. It is only provided as a ground point for the communication cable shielding. It is important to note that the shield ground should only be connected at a single trunk end in non-isolated applications. If grounds are tied together in non-isolated systems, even a slight voltage difference, between the absolute ground points, will create a "ground loop" condition which can cause serious damage to the equipment. Note that in isolated equipment, the above does not apply as there is no direct connection between the ground points however, in all applications, proper cable shield grounding should be practiced to eliminate and/or reduce electrical interference.

Our NR10 offers the option of an RS485 communication facility for direct connection to SCADA or other communications systems using the Modbus Protocol RTU salve protocol. The Modbus Protocol establishes the format for the master's query by placing into it the device address, a function code defining the requested action, any data to be sent, and an error checking field. The slave's response message is also constructed using Modbus Protocol. It contains fields confirming the action taken, any data to be returned, and an error-checking field. If an error occurs in receipt of the message, the NR10 will make no response. If the NR10 is unable to perform the requested action, it will construct an error message and send it as the response.

The electrical interface is 2-wire RS485, via 2 screw terminals. Connection should be made using twisted pair screened cable (Typically 22 gauge Belden 8761 or equivalent). All "A" and "B" connections are daisy chained together. Line topology may or may not require terminating loads depending on the type and length of cable used. Loop (ring) topology does not require any termination load. The impedance of the termination load should match the impedance of the cable and be at both ends of the line. The cable should be terminated at each end with a 120 ohm (0.25 Watt min.) resistor. A total maximum length of 3900 feet (1200 meters) is allowed for the RS485 network. A maximum of 32 electrical nodes can be connected, including the controller. The address of each the NR10 can be set to any value between 1 and 247. Broadcast mode (address 0) is not supported.

The format for each byte in RTU mode is:

| | |
|---|---|
| Coding System: | 8-bit per byte |
| Data Format: | 4 bytes (2 registers) per parameter. |
| | Floating point format ( to IEEE 754) |
| | Most significant register first (Default). The default may be changed if required -See Holding Register "Register Order" parameter. |
| Error Check Field: | 2 byte Cyclical Redundancy Check (CRC) |
| Framing: | 1 start bit |
| | 8 data bits, least significant bit sent first |
| | 1 bit for even/odd parity (or no parity) |
| | 1 stop bit if parity is used; 1 or 2 bits if no parity |

Data Coding

All data values in the NR10 meter are transferred as 32 bit IEEE754 floating point numbers, (input and output) therefore each NR10 meter value is transferred using two Modbus Protocol registers. All register read requests and data write requests must specify an even number of registers. Attempts to read/write an odd number of registers prompt the NR10 to return a Modbus Protocol exception message. However, for compatibility with some SCADA systems, the NR10 will respond to any single input or holding register read with an instrument type specific value.

The NR10 can transfer a maximum of 40 values in a single transaction; therefore the maximum number of registers requestable is 80. Exceeding this limit prompts the NR10 to generate an exception response.

Data transmission speed is selectable between 2400, 4800, 9600, 19200, 38400 baud.

## 1.2 Input register

Input registers are used to indicate the present values of the measured and calculated electrical quantities. Each parameter is held in two consecutive16 bit register. The following table details the 3X register address, and the values of the address bytes within the message. A (√) in the column indicates that the parameter is valid for the particular wiring system. Any parameter with a cross (X) will return the value zero. Each parameter is held in the 3X registers. Modbus Protocol function code 04 is used to access all parameters.

| | | | |
|---|---|---|---|
| For example, to request: | Amps 1 | Start address | =0006 |
| | | No. of registers | =0002 |
| | Amps 2 | Start address | =0008 |
| | | No. of registers | =0002 |

Each request for data must be restricted to 40 parameters or less. Exceeding the 40 parameter limit will cause a Modbus Protocol exception code to be returned.

## 1.2.1 NR10 Input Registers

| Address (Register) | NR10 Input Register Parameter | | Modbus Protocol Start Address Hex | |
|---|---|---|---|---|
| | Description | Units | Hi Byte | Lo Byte |
| 30085 | Total system power demand | W | 00 | 54 |
| 30087 | Maximum total system power demand | W | 00 | 56 |
| 30089 | Current system positive power demand | W | 00 | 58 |
| 30091 | Maximum system positive power demand | W | 00 | 5A |
| 30093 | Current system reverse power demand | W | 00 | 5C |
| 30095 | Maximum system reverse power demand | W | 00 | 5E |
| 30259 | Current demand | Amps | 01 | 02 |
| 30001 | Line to neutral volts | Volts | 00 | 00 |
| 30007 | Current | Amps | 00 | 06 |
| 30013 | Active Power | Watts | 00 | 0C |
| 30019 | Apparent Power | VoltAmps | 00 | 12 |
| 30025 | Reactive Power | VAr | 00 | 18 |
| 30031 | Power Factor | None | 00 | 1E |
| 30037 | Phase Angle | Degrees | 00 | 24 |
| 30071 | Frequency | Hz | 00 | 46 |
| 30073 | Import Active Energy | kWh | 00 | 48 |
| 30075 | Export Active Energy | kWh | 00 | 4A |
| 30077 | Import Reactive Energy | kVArh | 00 | 4C |
| 30265 | Maximum current Demand | Amps | 01 | 08 |
| 30079 | Export Reactive Energy | kVArh | 00 | 4E |
| 30343 | Total Active Energy | kWh | 01 | 56 |
| 30345 | Total Reactive Energy | kVArh | 01 | 58 |

1.3 Modbus Protocol Holding Registers and Digital meter set up:

Holding registers are used to store and display instrument configuration settings. All holding registers not listed in the table below should be considered as reserved for manufacturer use and no attempt should be made to modify their values.

The holding register parameters may be viewed or changed using the Modbus Protocol. Each parameter is held in two consecutive 4X registers. Modbus Protocol Function Code 03 is used to read the parameter and Function Code 16 is used to write. Write to only one parameter per message.

## 1.3.1 MODBUS Protocol Holding Register Parameters

| Address Register | Parameter | Modbus Protocol Start Address Hex | | Valid range | Mode |
|---|---|---|---|---|---|
| | | High Byte | Low Byte | | |
| 40013 | Relay Pulse Width | 00 | OA | Write relay on period in milliseconds: 60, 100 or 200, default 200. | r/w |
| 40019 | Network Parity Stop | 00 | 12 | Write the network port parity/stop bits for MODBUS Protocol, where:<br>0 = One stop bit and no parity, default. 1 = One stop bit and even parity. 2 = One stop bit and odd parity.3 = Two stop bits and no parity. Requires a restart to become effective. | r/w |
| 40021 | Network Node | 00 | 14 | Write the network port node address: 1 to 247 for MODBUS Protocol, default 1. Requires a restart to become effective. Note, both the MODBUS Protocol and Johnson Controls node addresses can be changed via the display setup menus. | r/w |
| 40029 | Network Baud Rate | 00 | 1C | Write the network port baud rate for MODBUS Protocol, where:<br>0 = 2400 baud. 1 = 4800 baud.<br>2 = 9600 baud, default.<br>3 = 19200 baud. 4 = 38400 baud. Requires a restart to become effective | r/w |
| 462721 | Demand Interval, Slide Time, Automatic Scroll Display Interval (Scroll Time), Backlight Time | F5 | 00 | Data Format: BCD<br>min-min-s-min<br>Scroll Time=0: the display does not scroll automatically<br>Backlight Time=0: Backlight is Always On. | r/w |
| 463761 | System Power | F9 | 10 | Default Format: Hex<br>0000: 0.001kWh (kVArh) /imp (default)<br>0001: 0.01kWh (kVArh) /imp<br>0002: 0.1kWh (kVArh) /imp<br>0003: 1kWh (kVArh) /imp | r/w |

| | | | | | |
|---|---|---|---|---|---|
| 463776 | Measurement Mode | F9 | 20 | Data Format: Hex<br>0001: Mode 1 (Total = Import)<br>0002: Mode 2 (Total = Import + Export)<br>0003: Mode 3 (Total = Import - Export) | r/w |
| 363792 | Pulse Output & LED Indicator Mode | F9 | 30 | Data Format: Hex<br>0000: Import & Export Energy, LED flashes for Import & Export Energy<br>0001: Import Energy, LED flashes for Import Energy only<br>0002: Export Energy, LED flashes for Export Energy only | ro |

The Following information in this section relates to the NR10 and is included to assist where a mixed network is implemented. RS485 or EIA (Electronic Industries Association) RS485 is a balanced line, half-duplex transmission system allowing transmission distances of up to 1.2 km. The following table summarizes the RS-485 Standard:

| PARAMETER | |
|---|---|
| Mode of Operation | Differential |
| Number of Drivers and Receivers | 32 Drivers, 32 Receivers |
| Maximum Cable Length | 1200 m |
| Maximum Data Rate | 10 M baud |
| Maximum Common Mode Voltage | 12 V to –7 V |
| Minimum Driver Output Levels (Loaded) | +/– 1.5 V |
| Minimum Driver Output Levels (Unloaded) | +/– 6 V |
| Drive Load | Minimum 60 ohms |
| Driver Output Short Circuit Current Limit | 150 mA to Gnd,<br>250 mA to 12 V<br>250 mA to –7 V |
| Minimum Receiver Input Resistance | 12 kohms |
| Receiver Sensitivity | +/– 200 mV |

Further information relating to RS485 may be obtained from either the EIA or the various RS485 device manufacturers, for example Texas Instruments or Maxim Semiconductors. This list is not exhaustive.

## 2.1 Half Duplex

Half duplex is a system in which one or more transmitters (talkers) can communicate with one or more receivers (listeners) with only one transmitter being active at any one time. For example, a "conversation" is started by asking a question, the person who has asked the question will then listen until he gets an answer or until he decides that the individual who was asked the question is not going to reply.

In a 485 network the "master" will start the "conversation" with a "query" addressed to a specific "slave", the "master" will then listen for the "slave's" response. If the "slave" does not respond within a pre-defined period, (set by control software in the "master"), the "master" will abandon the "conversation".

## 2.2 Connecting the Instruments

If connecting an RS485 network to a PC use caution if contemplating the use of an RS232 to 485 converters together with a USB to RS485 adapter. Consider either an RS232 to RS485 converter, connected directly to a suitable RS232 jack on the PC, or use a USB to RS485 converter or, for desktop PCs a suitable plug in RS485 card. (Many 232:485 converters draw power from the RS232 socket. If using a USB to RS232 adapter, the adapter may not have enough power available to run the 232:485 converter.)

Screened twisted pair cable should be used. For longer cable runs or noisier environments, use of a cable specifically designed for RS485 may be necessary to achieve optimum performance. All "A" terminals should be connected together using one conductor of the twisted pair cable, all "B" terminals should be connected together using the other conductor in the pair.

A Belden 9841 (Single pair) or 9842 (Two pair) or similar cable with a characteristic impedance of 120 ohms is recommended. The cable should be terminated at each end with a 120 ohm, quarter watt (or greater) resistor. Note: Diagram shows wiring topology only. Always follow terminal identification as per the wiring diagram lasered on the side of the NR10.

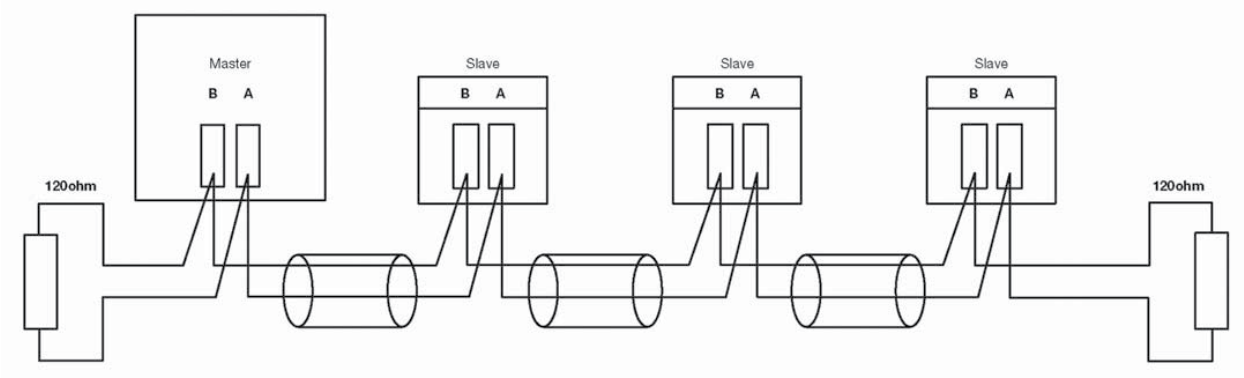


There must be no more than two wires connected to each terminal, this ensures that a "Daisy Chain or "straight line" configuration is used. A "Star" or a network with "Stubs (Tees)" is not recommended as reflections within the cable may result in data corruption.

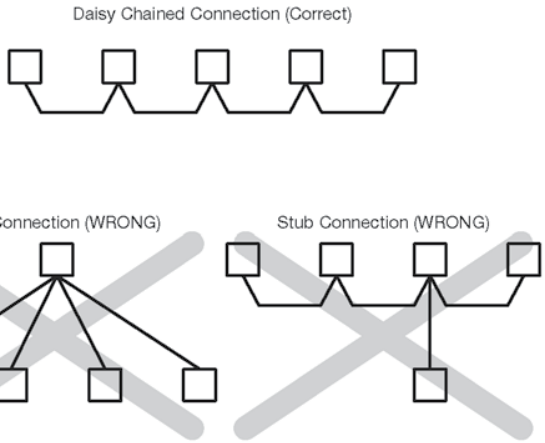


## 2.3 A and B terminals

The A and B connections to the NR10 Digital meter products can be identified by the signals present on them whilst there is activity on the RS485 bus:

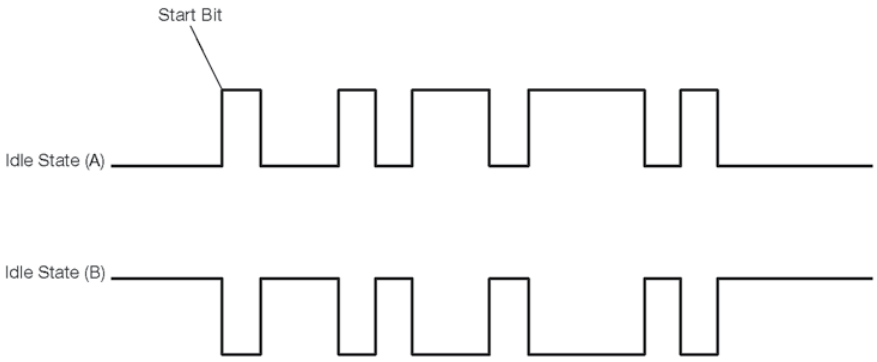


## 2.4 Troubleshooting

- Start with a simple network, one master and one slave. With the NR10 Digital meter this is easily achieved as the network can be left intact whilst individual instruments are disconnected by removing the RS485 connection from the rear of the instrument.
- Check that the network is connected together correctly. That is all of the "A's" are connected together, and all of the "B's" are connected together. Confirm that the data "transmitted" onto

the RS485 is not echoed back to the PC on the RS232 lines. (This facility is sometimes a link option within the converter). Many PC based packages seem to not perform well when they receive an echo of the message they are transmitting. SpecView and PCView (PC software) with a RS232 to RS485 converter are believed to include this feature.

- Confirm that the Address of the instrument is the same as the "master" is expecting.
- If the "network" operates with one instrument but not more than one check that each instrument has a unique address.
- Each request for data must be restricted to 40 parameters or less. Violating this requirement will impact the performance of the instrument and may result in a response time in excess of the specification.
- Check that the MODBUS Protocol mode (RTU or ASCII) and serial parameters (baud rate, number of data bits, number of stop bits and parity) are the same for all devices on the network.
- Check that the "master" is requesting floating-point variables (pairs of registers placed on floating point boundaries) and is not "splitting" floating point variables.
- Check that the floating-point byte order expected by the "master" is the same as that used by the NR10. (PCView and Citect packages can use a number of formats including that supported by this meter).
- If possible obtain a second RS232 to RS485 converter and connect it between the RS485 bus and an additional PC equipped with a software package, which can display the data on the bus. Check for the existence of valid requests.

Communication on a MODBUS Protocol Network is initiated (started) by a "Master" sending a query to a "Slave". The "Slave", which is constantly monitoring the network for queries addressed to it, will respond by performing the requested action and sending a response back to the "Master". Only the "Master" can initiate a query.

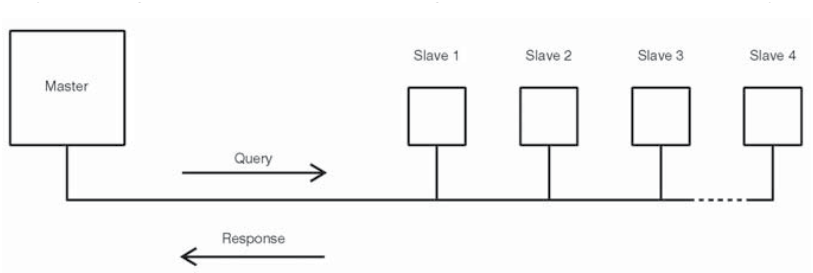


In the MODBUS Protocol the master can address individual slaves, or, using a special "Broadcast" address, can initiate a broadcast message to all slaves. The NR10 Digital meter do not support the broadcast address.

## 3.1 MODBUS Protocol Message Format

The MODBUS Protocol defines the format for the master's query and the slave's response.
The query contains the device (or broadcast) address, a function code defining the requested action, any data to be sent, and an error-checking field.

The response contains fields confirming the action taken, any data to be returned, and an error-checking field. If an error occurred in receipt of the message then the message is ignored, if the slave is unable to perform the requested action, then it will construct an error message and send it as its response. The MODBUS Protocol functions used by the NR10 Digital meters copy 16 bit register values between master and slaves. However, the data used by the NR10 Digital meter is in 32 bit IEEE 754 floating point format. Thus each instrument parameter is conceptually held in two adjacent MODBUS Protocol registers. Query

The following example illustrates a request for a single floating point parameter i.e. two 16-bit Modbus Protocol Registers.

First Byte Last Byte

| Slave Address | Function Code | Start Address (Hi) | Start Address (Lo) | Number of Points (Hi) | Number of Points (Lo) | Error Check (Lo) | Error Check (Hi) |
|---|---|---|---|---|---|---|---|

Slave Address: 8-bit value representing the slave being addressed (1 to 247), 0 is reserved for the broadcast address. The Digital meters do not support the broadcast address.
Function Code: 8-bit value telling the addressed slave what action is to be performed. (3, 4, 8 or 16 are valid for Digital meter)
Start Address (Hi): The top (most significant) eight bits of a 16-bit number specifying the start address of the data being requested.
Start Address (Lo): The bottom (least significant) eight bits of a 16-bit number specifying the start address of the data being requested. As registers are used in pairs and start at zero, then this must be an even number.
Number of Points (Hi): The top (most significant) eight bits of a 16-bit number specifying the number of registers being requested.
Number of Points (Lo): The bottom (least significant) eight bits of a 16-bit number specifying the number of registers being requested. As registers are used in pairs, then this must be an even number.
Error Check (Lo): The bottom (least significant) eight bits of a 16-bit number representing the error check value.
Error Check (Hi): The top (most significant) eight bits of a 16-bit number representing the error check value.

Response

The example illustrates the normal response to a request for a single floating point parameter i.e. two 16-bit Modbus Protocol Registers.

First Byte Last Byte

| Slave Address | Function Code | Byte Count | First Register Hi) | First Register (Lo) | Second Register (Hi) | Second Register (Lo) | Error Check (Lo) | Error Check (HI) |
|---|---|---|---|---|---|---|---|---|

Slave Address: 8-bit value representing the address of slave that is responding.
Function Code: 8-bit value which, when a copy of the function code in the query, indicates that the slave recognized the query and has responded. (See also Exception Response).
Byte Count: 8-bit value indicating the number of data bytes contained within this response
First Register (Hi)*: The top (most significant) eight bits of a 16-bit number representing the first register requested in the query.
First Register (Lo)*: The bottom (least significant) eight bits of a 16-bit number representing the first register requested in the query.
Second Register (Hi)*: The top (most significant) eight bits of a 16-bit number representing the
second register requested in the query.
Second Register (Lo)*: The bottom (least significant) eight bits of a 16-bit number representing the second register requested in the query.
Error Check (Lo): The bottom (least significant) eight bits of a 16-bit number representing the
error check value.
Error Check (Hi): The top (most significant) eight bits of a 16-bit number representing the error
check value.
*These four bytes together give the value of the floating point parameter requested.

Exception Response

If an error is detected in the content of the query (excluding parity errors and Error Check mismatch), then an error response (called an exception response), will be sent to the master. The exception response is identified by the function code being a copy of the query function code but with the most-significant bit set. The data contained in an exception response is a single byte error code.

First Byte Last Byte

| Slave Address | Function Code | Error Code | Error Check (Lo) | Error Check (Hi) |
|---|---|---|---|---|

Slave Address: 8-bit value representing the address of slave that is responding.
Function Code: 8 bit value which is the function code in the query OR'ed with 80 hex, indicating that the slave either does not recognize the query or could not carry out the action Requested.
Error Code: 8-bit value indicating the nature of the exception detected. (See "Table Of
Exception Codes" later).
Error Check (Lo): The bottom (least significant) eight bits of a 16-bit number representing the error check value.
Error Check (Hi): The top (most significant) eight bits of a 16-bit number representing the error
check value.

## 3.2 Serial Transmission Modes

There are two MODBUS Protocol serial transmission modes, ASCII and RTU. The NR10 Digital meter do not support the ASCII mode.

In RTU (Remote Terminal Unit) mode, each 8-bit byte is used in the full binary range and is not limited to ASCII characters as in ASCII Mode. The greater data density allows better data throughput for the same baud rate, however each message must be transmitted in a continuous stream. This is very unlikely to be a problem for modern communications equipment.

Coding System: Full 8-bit binary per byte. In this document, the value of each byte will be shown as two hexadecimal characters each in the range 0-9 or A-F.
Line Protocol: 1 start bit, followed by the 8 data bits. The 8 data bits are sent with least significant bit first.
User Option Of Parity No Parity and 2 Stop Bits
And Stop Bits: No Parity and 1 Stop Bit
Even Parity and 1 Stop Bit
Odd Parity and 1 Stop Bit.
User Option of Baud 4800 ; 9600 ; 19200 ; 38400
Rate: Digital meters do not support 38400 but do offer 2400 instead)

The baud rate, parity and stop bits must be selected to match the master's settings.

## 3.3 MODBUS Protocol Message Timing (RTU Mode)

A MODBUS Protocol message has defined beginning and ending points. The receiving devices recognizes the start of the message, reads the "Slave Address" to determine if they are being addressed and knowing when the message is completed they can use the Error Check bytes and parity bits to confirm the integrity of the message. If the Error Check or parity fails then the message is discarded.

In RTU mode, messages starts with a silent interval of at least 3.5 character times.

The first byte of a message is then transmitted, the device address.

Master and slave devices monitor the network continuously, including during the 'silent' intervals. When the first byte (the address byte) is received, each device checks it to find out if it is the addressed device. If the device determines that it is the one being addressed it records the whole message and acts accordingly, if it is not being addressed it continues monitoring for the next message.

Following the last transmitted byte, a silent interval of at least 3.5 character times marks the end of the message. A new message can begin after this interval.
In the NR10 1000 and 2000, a silent interval of 60msec minimum is required in order to guarantee successful reception of the next request.

The entire message must be transmitted as a continuous stream. If a silent interval of more than 1.5 character times occurs before completion of the message, the receiving device flushes the incomplete message and assumes that the next byte will be the address byte of a new message.

Similarly, if a new message begins earlier than 3.5 character times following a previous message, the receiving device may consider it a continuation of the previous message. This will result in an error, as the value in the final CRC field will not be valid for the combined messages.

## 3.4 How Characters are Transmitted Serially

When messages are transmitted on standard MODBUS Protocol serial networks each byte is sent in this order (left to right):

Transmit Character = Start Bit + Data Byte + Parity Bit + 1 Stop Bit (11 bits total):

Least Significant Bit (LSB) Most Significant Bit (MSB)

| Start | 1 | 2 | 3 | 4 | 5 | 6 | 7 | 8 | Party | Stop |
|---|---|---|---|---|---|---|---|---|---|---|

Transmit Character = Start Bit + Data Byte + 2 Stop Bits (11 bits total):

| Start | 1 | 2 | 3 | 4 | 5 | 6 | 7 | 8 | Party | Stop |
|---|---|---|---|---|---|---|---|---|---|---|

The NR10 Digital meter additionally support No parity, One stop bit.

Transmit Character = Start Bit + Data Byte + 1 Stop Bit (10 bits total):

| Start | 1 | 2 | 3 | 4 | 5 | 6 | 7 | 8 | Party | Stop |
|---|---|---|---|---|---|---|---|---|---|---|

The master is configured by the user to wait for a predetermined timeout interval. The master will wait for this period of time before deciding that the slave is not going to respond and that the transaction should be aborted. Care must be taken when determining the timeout period from both the master and the slaves' specifications. The slave may define the 'response time' as being the period from the receipt of the last bit of the query to the transmission of the first bit of the response. The master may define the 'response time' as period between transmitting the first bit of the query to the receipt of the last bit of the response. It can be seen that message transmission time, which is a function of the baud rate, must be included in the timeout calculation.

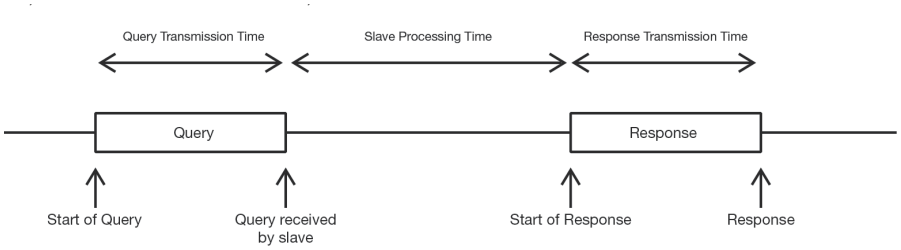


## 3.5 Error Checking Methods

Standard MODBUS Protocol serial networks use two error checking processes, the error check bytes mentioned above check message integrity whilst Parity checking (even or odd) can be applied to each byte in the message.

### 3.5.1 Parity Checking

If parity checking is enabled – by selecting either Even or Odd Parity - the quantity of "1's" will be counted in the data portion of each transmit character. The parity bit will then be set to a 0 or 1 to result in an Even or Odd total of "1's".

Note that parity checking can only detect an error if an odd number of bits are picked up or dropped in a transmit character during transmission, if for example two 1's are corrupted to 0's the parity check will not find the error.

If No Parity checking is specified, no parity bit is transmitted and no parity check can be made. Also, if No Parity checking is specified and one stop bit is selected the transmit character is effectively shortened by one bit.

### 3.5.2 CRC Checking

The error check bytes of the MODBUS Protocol messages contain a Cyclical Redundancy Check (CRC) value that is used to check the content of the entire message. The error check bytes must always be present to comply with the MODBUS Protocol, there is no option to disable it.

The error check bytes represent a 16-bit binary value, calculated by the transmitting device. The receiving device must recalculate the CRC during receipt of the message and compare the calculated value to the value received in the error check bytes. If the two values are not equal, the message should be discarded.

The error check calculation is started by first pre-loading a 16-bit register to all 1's (i.e. Hex (FFFF)) each successive 8-bit byte of the message is applied to the current contents of the register. Note: only the eight bits of data in each transmit character are used for generating the CRC, start bits, stop bits and the parity bit, if one is used, are not included in the error check bytes.

During generation of the error check bytes, each 8-bit message byte is exclusive OR'ed with the lower half of the 16 bit register. The register is then shifted eight times in the direction of the least significant bit (LSB), with a zero filled into the most significant bit (MSB) position. After each shift the LSB prior to the shift is extracted and examined. If the LSB was a 1, the register is then exclusive OR'ed with a pre-set, fixed value. If the LSB was a 0, no exclusive OR takes place.

This process is repeated until all eight shifts have been performed. After the last shift, the next 8-bit message byte is exclusive OR'ed with the lower half of the 16 bit register, and the process repeated. The final contents of the register, after all the bytes of the message have been applied, is the error check value. In the following pseudo code "Error Word" is a 16-bit value representing the error check values.

```
BEGIN
    Error Word = Hex (FFFF)
    FOR Each byte in message
        Error Word = Error Word XOR byte in message
        FOR Each bit in byte
            LSB = Error Word AND Hex (0001)
            IF LSB = 1 THEN Error Word = Error Word – 1
            Error Word = Error Word / 2
            IF LSB = 1 THEN Error Word = Error Word XOR Hex (A001)
        NEXT bit in byte
NEXT Byte in message
END
```

## 3.6 Function Codes

The function code part of a MODBUS Protocol message defines the action to be taken by the slave. The NR10 Digital meter support the following function codes:

| Code | MODBUS Protocol name | Description |
|---|---|---|
| 03 | Read Holding Registers | Read the contents of read/write location (4X references) |
| 04 | Read Input Registers | Read the contents of read only location (3X references) |
| 08 | Diagnostics | Only sub-function zero is supported. This returns the data element of the query unchanged. |
| 15 | Pre-set Multiple Registers | Set the contents of read/write location (4X references) |

## 3.7 IEEE floating point format

The MODBUS Protocol defines 16 bit "Registers" for the data variables. A 16-bit number would prove too restrictive, for energy parameters for example, as the maximum range of a 16-bit number is 65535.

However, there are a number of approaches that have been adopted to overcome this restriction. The NR10 Digital meters use two consecutive registers to represent a floating-point number, effectively expanding the range to +/- 1x1037.

The values produced by The NR10 Digital meters can be used directly without any requirement to "scale" the values, for example, the units for the voltage parameters are volts, the units for the power parameters are watts etc.

What is a floating point Number?
A floating-point number is a number with two parts, a mantissa and an exponent and is written in the form 1.234 x 105. The mantissa (1.234 in this example) must have the decimal point moved to the right with the number of places determined by the exponent (5 places in this example) i.e. 1.234x 105 = 123400. If the exponent is negative the decimal point is moved to the left.

What is an IEEE 754 format floating-point number?

An IEEE 754 floating point number is the binary equivalent of the decimal floating-point number shown above. The major difference being that the most significant bit of the mantissa is always arranged to be 1 and is thus not needed in the representation of the number. The process by which the most significant bit is arranged to be 1 is called normalization, the mantissa is thus referred to as a "normal mantissa". During normalization the bits in the mantissa are shifted to the left whilst the exponent is decremented until the most significant bit of the mantissa is one.
In the special case where the number is zero both mantissa and exponent are zero.

The bits in an IEEE 754 format have the following significance:

| Data Hi Reg, Hi Byte. | Data Hi Reg, Lo Byte. | Data Lo Reg, Hi Byte. | Data Lo Reg, Lo Byte. |
|---|---|---|---|
| SEEE EEEE | EMMM MMMM | MMMM MMMM | MMMM MMMM |

Where:
S represents the sign bit where 1 is negative and 0 is positive
E is the 8-bit exponent with an offset of 127 i.e. an exponent of zero is represented by 127, an exponent of 1 by 128 etc.
M is the 23-bit normal mantissa. The 24th bit is always 1 and, therefore, is not stored.

Using the above format the floating point number 240.5 is represented as 43708000 hex:

| Data Hi Reg, Hi Byte. | Data Hi Reg, Lo Byte. | Data Lo Reg, Hi Byte. | Data Lo Reg, Lo Byte. |
|---|---|---|---|
| 43 | 70 | 80 | 00 |

The following example demonstrates how to convert IEEE 754 floating-point numbers from their hexadecimal form to decimal form. For this example, we will use the value for 240.5 shown above

Note that the floating-point storage representation is not an intuitive format. To convert this value to decimal, the bits should be separated as specified in the floating-point number storage format table shown above.

For example:

| Data Hi Reg, Hi Byte. | Data Hi Reg, Lo Byte. | Data Lo Reg, Hi Byte. | Data Lo Reg, Lo Byte. |
|---|---|---|---|
| 0100 0011 | 0111 0000 | 1000 0000 | 0000 0000 |

From this you can determine the following information.
- The sign bit is 0, indicating a positive number.
- The exponent value is 10000110 binary or 134 decimal. Subtracting 127 from 134 leaves 7, which is the actual exponent.
- The mantissa appears as the binary number 11100001000000000000000

There is an implied binary point at the left of the mantissa that is always preceded by a 1. This bit is not stored in the hexadecimal representation of the floating-point number. Adding 1 and the binary point to the beginning of the mantissa gives the following:
1.11100001000000000000000

Now, we adjust the mantissa for the exponent. A negative exponent moves the binary point to the left. A positive exponent moves the binary point to the right. Because the exponent is 7, the mantissa is adjusted as follows:
11110000.1000000000000000
Finally, we have a binary floating-point number. Binary bits that are to the left of the binary point represent
the power of two corresponding to their position. For example, 11110000 represents (1 x 27) + (1 x 26) + (1x 25) + (1 x 24) + (0 x 23)+ (0 x 22) + (0 x 21)+ (0 x 20) = 240.
Binary bits that are to the right of the binary point also represent a power of 2 corresponding to their position. As the digits are to the right of the binary point the powers are negative. For example: .100 represents (1 x 2-1) + (0 x 2-2)+ (0 x 2-3) + … which equals 0.5.
Adding these two numbers together and making reference to the sign bit produces the number +240.5.

For each floating point value requested two MODBUS Protocol registers (four bytes) must be requested. The received order and significance of these four bytes for the NR10 is shown below:

| | | | |
|---|---|---|---|
| Data Hi Reg,<br>Hi Byte. | Data Hi Reg,<br>Lo Byte. | Data Lo Reg,<br>Hi Byte. | Data Lo Reg,<br>Lo Byte. |

## 3.8 MODBUS Protocol Commands supported

The NR10 Digital meters support the "Read Input Register" (3X registers), the "Read Holding Register" (4X registers) and the "Pre-set Multiple Registers" (write 4X registers) commands of the MODBUS Protocol RTU protocol. All values stored and returned are in floating point format to IEEE 754 with the most significant register first.

### 3.8.1 Read Input Registers

MODBUS Protocol code 04 reads the contents of the 3X registers.
Example
The following query will request 'Volts 1' from an instrument with node address 1:

| Field Name | Example(Hex) |
|---|---|
| Slave Address | 01 |
| Function | 04 |
| Starting Address High | 00 |
| Starting Address Low | 00 |
| Number of Points High | 00 |
| Number of Points Low | 02 |
| Error Check Low | 71 |
| Error Check High | CB |

Note: Data must be requested in register pairs i.e. the "Starting Address" and the "Number of Points" must be even numbers to request a floating point variable. If the "Starting Address" or the "Number of points" is odd then the query will fall in the middle of a floating point variable the product will return an error message.
The following response returns the contents of Volts 1 as 230.2. But see also "Exception Response" later.

| Field Name | Example (Hex) |
|---|---|
| Slave Address | 01 |
| Function | 04 |
| Byte Count | 04 |
| Data, High Reg, High Byte | 43 |
| Data, High Reg, Low Byte | 66 |
| Data, Low Reg, High Byte | 33 |
| Data, Low Reg, Low Byte | 34 |
| Error Check Low | 1B |
| Error Check High | 38 |

## 3.9 Holding Registers

### 3.9.1 Read Holding Registers

MODBUS Protocol code 03 reads the contents of the 4X registers.
Example
The following query will request the prevailing 'Demand Time':

| Field Name | Example (Hex) |
|---|---|
| Slave Address | 01 |
| Function | 03 |
| Starting Address High | 00 |
| Starting Address Low | 00 |
| Number of Points High | 00 |
| Number of Points Low | 02 |
| Error Check Low | C4 |
| Error Check High | 0B |

Note: Data must be requested in register pairs i.e. the "Starting Address" and the "Number of Points" must be even numbers to request a floating point variable. If the "Starting Address" or the "Number of points" is odd then the query will fall in the middle of a floating point variable the product will return an error message.

The following response returns the contents of Demand Time as 1, But see also "Exception Response" later.

| Field Name | Example (Hex) |
|---|---|
| Slave Address | 01 |

| | |
|---|---|
| Function | 03 |
| Byte Count | 04 |
| Data, High Reg, High Byte | 3F |
| Data, High Reg, Low Byte | 80 |
| Data, Low Reg, High Byte | 00 |
| Data, Low Reg, Low Byte | 00 |
| Error Check Low | F7 |
| Error Check High | CF |

## 3.9.2 Write Holding Registers

MODBUS Protocol code 10 (16 decimal) writes the contents of the 4X registers.
Example
The following query will set the Demand Period to 60, which effectively resets the Demand Time:

| Field Name | Example (Hex) |
|---|---|
| Slave Address | 01 |
| Function | 10 |
| Starting Address High | 00 |
| Starting Address Low | 02 |
| Number of Registers High | 00 |
| Number of Registers Low | 02 |
| Byte Count | 04 |
| Data, High Reg, High Byte | 42 |
| Data, High Reg, Low Byte | 70 |
| Data, Low Reg, High Byte | 00 |
| Data, Low Reg, Low Byte | 00 |
| Error Check Low | 67 |
| Error Check High | D5 |

Note: Data must be written in register pairs i.e. the "Starting Address" and the "Number of Points" must be even numbers to write a floating point variable. If the "Starting Address" or the "Number of points" is odd then the query will fall in the middle of a floating point variable the product will return an error message. In general only one floating point value can be written per query

The following response indicates that the write has been successful. But see also "Exception Response later.

| | Example (Hex) |
|---|---|
| Slave Address | 01 |
| Function | 10 |
| Starting Address High | 00 |
| Starting Address Low | 02 |
| Number of Registers High | 00 |
| Number of Registers Low | 02 |
| Error Check Low | E0 |
| Error Check High | 08 |

## 3.10 Exception Response

If the slave in the "Write Holding Register" example above, did not support that function then it would have replied with an Exception Response as shown below. The exception function code is the original function code from the query with the MSB set i.e. it has had 80 hex logically ORed with it. The exception code indicates the reason for the exception. The slave will not respond at all if there is an error with the parity or CRC of the query. However, if the slave can not process the query then it will respond with an exception. In this case a code 01, the requested function is not support by this slave.

| Field Name | Example (Hex) |
|---|---|
| Slave Address | 01 |
| Function | 10 OR 80 = 90 |
| Exception Code | 01 |
| Error Check Low | 8D |
| Error Check High | C0 |

## 3.11 Exception Codes

### 3.11.1 Table of Exception Codes

Digital meters support the following function codes:

| Exception Code | MODBUS Protocol name | Description |
|---|---|---|
| 01 | Illegal Function | The function code is not supported by the product |
| 02 | Illegal Data Address | Attempt to access an invalid address or an attempt to read or write part of a floating point value |
| 03 | Illegal Data Value | Attempt to set a floating point variable to an invalid value |
| 05 | Slave Device Failure | An error occurred when the instrument attempted to store an update to it's configuration |

## 3.12 Diagnostics

MODBUS Protocol code 08 provides a number of diagnostic sub-functions. Only the "Return Query Data" sub-function (sub-function 0) is supported on the NR10 Digital meters.
Example

The following query will send a diagnostic "return query data" query with the data elements set to Hex(AA) and Hex(55) and will expect these to be returned in the response:

| Field Name | Example (Hex) |
|---|---|
| Slave Address | 01 |
| Function | 08 |
| Sub-Function High | 00 |
| Sub-Function Low | 00 |
| Data Byte 1 | AA |
| Data Byte 2 | 55 |
| Error Check Low | 5E |
| Error Check High | 94 |

Note: Exactly one register of data (two bytes) must be sent with this function.

The following response indicates the correct reply to the query, i.e. the same bytes as the query.

| Field Name | Example (Hex) |
|---|---|
| Slave Address | 01 |
| Function | 08 |
| Sub-Function High | 00 |
| Sub-Function Low | 00 |
| Data Byte 1 | AA |
| Data Byte 2 | 55 |
| Error Check Low | 5E |
| Error Check High | 94 |

**LUMEL S.A.**
ul. Słubicka 4, 65-127 Zielona Góra, Poland
tel.: +48 68 45 75 100, fax +48 68 45 75 508
www.lumel.com.pl

**Technical support:**
tel.: (+48 68) 45 75 143, 45 75 141, 45 75 144, 45 75 140
e-mail: export@lumel.com.pl

**Export department:**
tel.: (+48 68) 45 75 130, 45 75 131, 45 75 132
e-mail: export@lumel.com.pl

**Calibration & Attestation:**
e-mail: laboratorium@lumel.com.pl