MULTIFUNCTION POWER MONITOR

NR10



USER'S MANUAL

CE

1 Introduction

The multifunction power meter NR10 is a top new-generation dinrail mounted meter, used not only in the electricity transmission and power distribution system but also in the power consumption measurement and analysis in high voltage intelligent power grid.

This document provides operating, maintenance and installation instructions for the NR10. The unit measures and displays the characteristics of single phase two wires including voltage, frequency, current, power, active and reactive energy, imported or exported. Energy is measured in terms of kWh, kVArh. Maximum demand power can be measured over preset periods of up to 60 minutes.

The NR10 features a two built-in pulsed outputs and RS485 Modbus RTU output. Configuration is password protected.

1.1 Unit Characteristics

The NR10 can measure and display:
- Voltage
- Frequency
- Current
- Power, maximum power demand and power factor
- Active energy imported and exported
- Reactive energy imported and exported

The unit has password-protected set-up screens for:
- Changing password
- Demand Interval time
- Reset for demand measurements
- Pulse output duration

A pulse output indicates real-time energy measurement. An RS485 output allows remote monitoring from another display or a computer.

1.2 RS485 Serial – Modbus RTU

This uses an RS485 serial port with Modbus RTU protocol to provide a means of remotely monitoring and controlling the NR10. Set-up screens are provided for setting up the RS485 port. See section 4.8

1.3 Pulse output

This provides 2 pulse outputs those clocks up measured active and reactive energy. The constant for reactive energy is 5000imp/kVarh. The pulse width for active energy can be set from the Set-up menu.

2 Start Up Screens

Σ T8 IMP EXP MD 1 2 888:8.8:8.8 PF Hz MkVArh MkWh	The first screen lights all display segments and can be used as a display check
2P1t 2.1	The second screen indicates the firmware installed in the unit and its build number.
Add 001	Next the unit will display the set Modbus address.
bd 9600	Finally the meter will display the configured baud rate.

*After a short delay, the screen will display the total active energy measurement.

3 Buttons

The buttons operate as follows:

	This is the button used to rotate through the different parameter options. This is also the button used to cycle through numbers when in selection mode. Holding this button when in selection mode will exit selection without saving.
	This is the button that is held to enter an input, to confirm your selection change and to access the set up menu. This is also the button used to move right when in selection mode.

3.1 Measurements

Each successive press of the button selects a new parameter:

Σ 000000.00 kWh	Total active energy (Σ kWh).
IMP 000000.00 kWh	Imported active energy (kWh).
EXP 000000.00 kWh	Exported active energy (kWh).
Σ r 000000.00 kWh	Partial active energy (Σ r kWh).
Σ 000000.00 kVArh	Total reactive energy (Σ kVArh).
IMP 000000.00 kVArh	Imported reactive energy (kVArh).
EXP 000000.00 kVArh	Exported reactive energy (kVArh).
Σ r 000000.00 kVArh	Partial reactive energy (Σ r kVArh).
Σ MD 2400 W	Total Maximum Demand (W).
230.0 V	Voltage Input (V).
0.000 A	Current Input (A).
0 W	Instantaneous Active Power (W).
0 VAr	Instantaneous Reactive Power (VAr).
0 VA	Instantaneous Apparent Power (VA).
0.999 PF	Power Factor.
50.00 Hz	Frequency (Hz)
cSt.1000	Pulse Constant
Add 001	Modbus Address (001-241)
bd 9600	Modbus Baud Rate
Σ 0.0h	Hours Run (Σ h)

4 Set Up

To enter set-up mode, press the button for 3 seconds, until the password screen appears.

PAS0000	The set-up menu is password-protected so you must enter the correct password (default '1000') before proceeding.
PAS0000	Use the button to change the selected number, use the button to move right.
PAS 1000	Once you have inputted the correct password hold the button to confirm your selection.
Err	If the inputted password is correct, access will be granted to the set up menu. If an incorrect password is inputted an error screen will appear and you will be prompted to try again.

To exit the set-up menu, press & hold until the measurement screen is restored.

4.1 Menu Option Selection

1. Use the button to scroll through to the required item in the menu. The menu scrolls through on a loop.
2. Once on the desired menu option, press & hold to confirm your selection.
3. If an item flashes, then it can be adjusted by the button. If not, there maybe a further layer.
4. Once you have changed the selection to the desired option, press & hold to confirm your selection. Once the option stops flashing it will set.
5. Having completed a parameter setting, press & hold the button to exit the set-up menu.

4.2 Number Entry Procedure

When setting up the unit, some screens require the entering of a number. In particular, on entry to the set-up menu, a password must be entered. Digits are set individually, from left to right. The procedure is as follows:

1. The current digit to be set will start flashing and is set using the button.
2. Press to move right to the next digit.
3. After setting the last digit, press & hold the button to confirm the change.

4.3 Set Modbus Address

This sets the Modbus address of the specific meter so that clients using a Modbus system can differentiate between meters. Available options are 001-241.

Add 001	Use the button to choose the Modbus Address menu option.
Add 001	Press & hold the button to edit the menu option. The Modbus address screen will appear with the first digit flashing.
Add 241	Use the button to set the first digit and press to move to the next digit.
Good	Press & hold the button to confirm the change to the option you have selected.

To exit the set-up menu, press & hold until the measurement screen is restored.

4.4 Set Baud Rate

The baud rate of a data communications system is the number of symbols per second transferred.

bd 9600	Use the button to choose the Baud Rate menu option.
bd 9600	Press & hold the button to edit the menu option. The baud rate option will appear flashing.
bd 4800	Use the button to cycle through the available options. Available options are 1200, 2400, 4800 & 9600.
Good	Press & hold the button to confirm the change to the option you have selected.

To exit the set-up menu, press & hold until the measurement screen is restored.

Warnings

Important Safety Information is contained in the Maintenance section. Familiarize yourself with this information before attempting installation or other procedures. Symbols used in this document:

Risk of Danger: These instructions contain important safety information. Read them before starting installation or servicing of the equipment.

Caution: Risk of Electric Shock

4.3 Set Parity

Available options are none (N), even (E) & odd (O).

PrtY n	Use the button to choose the Parity menu option.
PrtY n	Press & hold the button to edit the menu option. The parity option will appear flashing.
PrtY E	Use the button to cycle through the available options.
Good	Press & hold the button to confirm the change to the option you have selected.

To exit the set-up menu, press & hold until the measurement screen is restored.

4.6 Set Pulsed Output

The NR10 comes with 2 built-in pulsed outputs. One of the pulsed outputs is settable by the user, the other pulsed output is fixed. Available options for editable pulsed outputs are kWh, kVArh, Import kWh, Export kWh, Import kVArh & Export kVArh.

Please note there are limitations that need to be factored in when setting the pulsed output. This is based upon the relay output only being able to pulse 2 times in one second.

PLS oUt kWh	Use the button to choose the Pulsed Output menu option.
PLS oUt kWh	Press & hold the button to edit the menu option. The Pulsed output option will appear flashing.
EXP PLS oUt kVArh	Use the button to cycle through the available options.
Good	Press & hold the button to confirm the change to the option you have selected.

To exit the set-up menu, press & hold until the measurement screen is restored.

4.7 Set Pulse Constant

The Pulse Constant is the menu setting that allows you to set how many times the meter will pulse to produce 1 pulsed output. Available options are 1, 10, 100 & 1000. For example, if you have set the Pulsed Output (see 4.4) to kWh, and the Pulse Constant is set to 10, the meter will pulse 10 times per kWh pulsed output.

PLS cSt	Use the button to choose the Pulse Constant menu option.
cSt 1000	Press & hold the button to edit the menu option. The Pulse constant option will appear flashing.
cSt 1	Use the button to cycle through the available options.
Good	Press & hold the button to confirm the change to the option you have selected.

To exit the set-up menu, press & hold until the measurement screen is restored.

4.8 Set Pulse Duration

The Pulse Duration option that allows you to set how long the contact of the pulse is open for per pulse. Available options are 60, 100 & 200mS.

PLS t	Use the button to choose the Baud Rate menu option.
PLSt 200	Press & hold the button to edit the menu option. The Pulse duration option will appear flashing.
PLSt 100	Use the button to cycle through the available options.
Good	Press & hold the button to confirm the change to the option you have selected.

To exit the set-up menu, press & hold until the measurement screen is restored.

4.9 DIT - Demand Integration Time

This sets the period in minutes over which the power readings are integrated for maximum demand measurement.

dIt SEt	Use the button to choose the DIT SET menu option.
dIt 15	Press & hold the button to edit the menu option. The screen will display a flashing number.
dIt 30	Use the button to cycle through the available options. The options are: off, 5, 10,15 30,60 minutes.
Good	Press & hold the button to confirm the change to the option you have selected.

To exit the set-up menu, press & hold until the measurement screen is restored.

4.10 Automatic Scroll Time Interval

Use this section to set the time interval for the meter to scroll through the different parameters.

ScrL t	Use the button to choose the Scrl T menu option.
t 00 5	Press & hold the button to edit the menu option. The screen will display a flashing number.
t 30 5	Use the button to cycle through the available options.
Good	Press & hold the button to confirm the change to the option you have selected.

To exit the set-up menu, press & hold until the measurement screen is restored.

4.11 LP - Light Period

This sets the period in minutes over which the backlight on the meter stays on for.

LP SEt	Use the button to choose the LP SET menu option.
LP OFF	Press & hold the button to edit the menu option. The screen will display a flashing number.
LP 60	Use the button to cycle through the available options. The options are: off, 5, 10,15 30,60 minutes. The option OFF means that the backlight stays on continuously.
Good	Press & hold the button to confirm the change to the option you have selected.

To exit the set-up menu, press & hold until the measurement screen is restored.

4.12 Reset (Clr)

Within this menu option, you can clear the Maximum Demand Power (W), you can reset the Partial Active Energy (Σ kWh) and the Partial Reactive Energy (Σ kVArh).

clr	Use the button to choose the Clear menu option.
MD clr	Press & hold the button to edit the menu option. The first option will appear flashing.
M r clr	Use the button to cycle through the available options.
Good	Press & hold the button to confirm the selection. Once the meter has cleared the reading, it will appear saying "good".

To exit the set-up menu, press & hold until the measurement screen is restored.

4.13 Change Password

SEtPASS	Use the button to choose the change password option.
PAS 1000	Press & hold the button to edit the password. The new password screen will appear with the first digit flashing.
PAS 1000	Use the button to set the first digit and press to move to the next digit.
PAS 1234	Repeat the procedure for the remaining three digits.
Good	After setting the last digit, press & hold the button to confirm your change.

To exit the set-up menu, press & hold until the measurement screen is restored.

5 Specifications

The NR10 can monitor and display the following parameters of a single phase supply:

5.1.1 Voltage and Current

Voltage inputs through 2 way fixed connectors with 35mm² maximum stranded wire capacity

- Phase to neutral voltage 176 to 276V a.c.
- Phase current

5.1.2 Power factor and Frequency and Max. Demand

- Frequency in Hz
- Instantaneous Power Power 0 to999MW
- Reactive Power 0 to 999MVAr
- Volt-amps 0 to 999 MVA
- Maximum demanded power since last Demand reset Power factor

5.1.3 Energy Measurements

• Imported active energy	0 to 99999.9 kWh
• Exported active energy	0 to 99999.9 kWh
• Imported reactive energy	0 to 99999.9 kVArh
• Exported reactive energy	0 to 99999.9 kVArh
• Total active energy	0 to 99999.9 kWh
• Total reactive energy	0 to 99999.9 kVArh

5.2 Accuracy

• Voltage	0·5% of range maximum
• Current	0·5% of nominal
• Frequency	0·2% of mid-frequency
• Power factor	1% of unity (0.01)
• Active power (W)	±1% of range maximum
• Reactive power (VAr)	±2% of range maximum
• Apparent power (VA)	±1% of range maximum
• Active energy (Wh)	Class 1 IEC 62053-21
• Reactive energy (VARh)	±2% of range maximum
• Total harmonic distortion	1% up to 31st harmonic
• Temperature co-efficient	Voltage and current = 0.013%/°C typical
• Active energy	= 0·018%/°C, typical
• Response time to step input	1s, typical, to >99% of final reading, at 50 Hz.

5.3 Interfaces for External Monitoring

Three interfaces are provided:

- RS485 communication channel that can be programmed for Modbus RTU protocol
- Relay output indicating real-time measured energy. (configurable)
- Pulse output 5000imp/kWh (not configurable)

The Modbus configuration (Baud rate etc.) and the pulse relay output assignments (kW/kVArh, import/export etc.) are configured through the Set-up screens.

5.5.1 Pulse Output

Opto-coupler with potential free SPST-NO Contact
(Contact rating 5-27V DC / Max current input: Imin 2mA and Imax 27mA DC). The pulse relay output can be set to generate pulses to represent kWh or kVArh.

Rate can be set to generate 1 pulse per:
1 = 1 kWh/kVArh
10 = 10 kWh/kVArh
100 = 100 kWh/kVArh
1000 = 1000 kWh/kVArh

Pulse width 200/100/60 ms.

5.5.2 RS485 Output for Modbus RTU

For Modbus RTU, the following RS485 communication parameters can be configured from the set-up menu:

Baud rate 1200, 2400, 4800, 9600,

Parity none / odd / even

RS485 network address 3-digit number, 1 to 247

Modbus™ Word order Hi/Lo byte order is set automatically to normal or reverse. It cannot be configured from the set-up menu.

5.6 Reference Conditions of Influence Quantities

Influence Quantities are variables that affect measurement errors to a minor degree. Accuracy is verified under nominal value (within the specified tolerance) of these conditions.

• Ambient temperature	23°C ±1°C
• Input waveform	50 or 60Hz ±2%
• Input waveform	Sinusoidal (distortion factor < 0·005)
• Magnetic field of external origin	Terrestrial flux

5.7 Environment

• Operating temperature	-25°C to +55°C*
• Storage temperature	-40°C to +70°C*
• Relative humidity	0 to 90%, non-condensing
• Altitude	Up to 2000m
• Warm up time	1 minute
• Vibration	10Hz to 50Hz, IEC 60068-2-6, 2g
• Shock	30g in 3 planes

*Maximum operating and storage temperatures are in the context of typical daily and seasonal variation.

5.8 Declaration of Conformity

We, LUMEL, declare under our sole responsibility as the manufacturer that the single phase multifunction electrical energy meter "NR10", corresponds to the production model described in the EC-type examination certificate and to the requirements of the Directive 2004/22/EC EC type examination certificate number 0120/SGS0219. Identifcation number of the NB 0120.

6 Meter

6.1 Dimensions

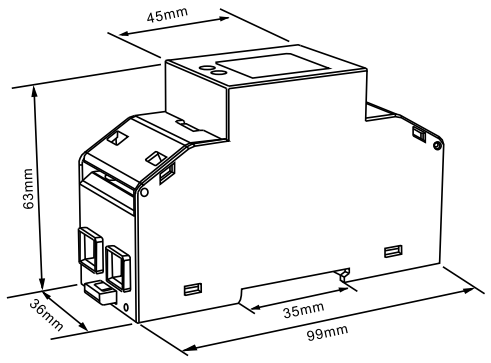

7 Wiring Diagram

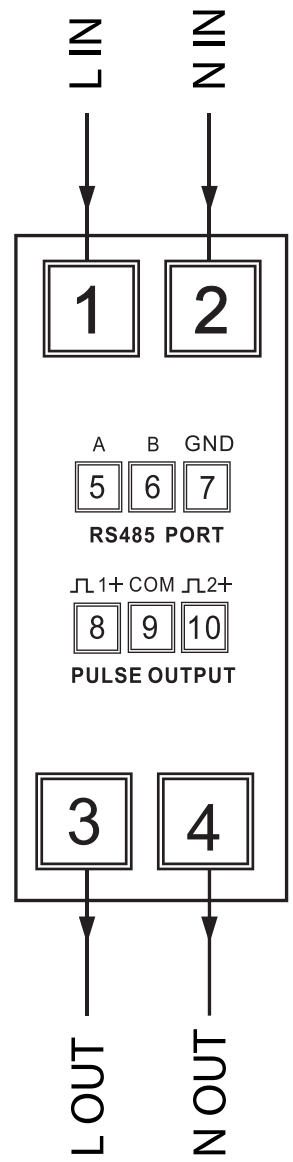

8 Installation / Maintenance

Read these instructions carefully and look at the equipment to become familiar with the device before trying to install "HAZARD OF ELECTRIC SHOCK, EXPLOSION, OR ARC FLASH"

Apply appropriate personal protective equipment and follow safe electrical work practices applicable to local standards. Turn off all power supplying this device and the equipment in which it is installed before working on it. Always use a properly rated voltage sensing device to confirm that all power is off. Do not exceed the device's ratings for maximum limits. Do not use this device for critical control or protection applications where human or equipment safety relies on the operation of the control circuit. Do not allow the total additive current flowing through the device to exceed maximum continuous current rating. Failure to follow these instructions will result in death or serious injury.

8.1

Turn off all power supplying this device and the equipment in which it is installed before working on it. 2. Always use a properly rated voltage sensing device to confirm that all power is off.

8.2 Input Wiring and Fusing

Choose fuses of a type and with a breaking capacity appropriate to the supply and in accordance with local regulations.

A switch or circuit breaker allowing isolation of supplies to the unit must be provided where practical. In primary metering applications, ensure the supply is isolated before any maintenance on the product. Tampering with the product seals may contravene local laws.

8.3 Wire Size / Torque

Connections	Cable size (mm² / AWG)	Recommended Torque
A B GND 1+ COM 2+ / 5 6 7 8 9 10 / RS485 PORT PULSE OUTPUT	22 Gauge Belden 8761 or equivalent	0.6 Nm
L IN N IN / 1 2 3 4 / L OUT N OUT	25mm²	2 - 2.5 Nm

8.4 Maintenance

The front of the case should be wiped with a dry cloth only, using minimal pressure. If necessary wipe the rear case with a dry cloth.

No user serviceable parts

LUMEL
EVERYTHING COUNTS

Via Lirone 60/i, Castel Maggiore (BO) 40013
e-mail: info@eurotecsrl.com Website: www.eurotecsrl.com
Tel: +39 051/6321595 C.F. 04103780377 P.I. 01596581205