

NR10

DIN RAIL MULTIFUNCTION POWER METER

Features

- Measures kWh, Kvarh, KW, Kvar, KVA, PF, Hz, dmd, V, A, and more
- Bi-directional measurement IMP & EXP
- Two pulse outputs
- Din Rail mounted
- 100A direct connected
- Class 1.0 accuracy
- 36mm width 2 modual

NR10 is a 100A, single phase energy meter with bi-directional energy measurement ideal for Solar PV metering. With a Modbus communication port, the unit allows for remote monitoring and can measure a wide variety of parameters. The blue back-lighted LCD screen for perfect reading makes this device suitable for industrial, residential, and utility applications.

1. Parameters

- Phase to Neutral voltage
- Frequency
- Current Max Demand
- kW,kVA & kVAr
- Power Max Demand
- Power Factor
- Import kWh
- Export kWh
- Import kVarh
- Export kVArh
- Total kWh (Active Energy)
- Total kVarh (Reactive Energy)
- Hours Run

2. Specifications

Measured Parameters
The unit can monitor and display the following parameters of a single phase two wire (1p2w) system.

Voltage and Current
- Phase to neutral voltages 176 to 276V a.c.
- Imin-Iref (Max) 0.5-10(100A)

This meter is certified and tested at class 1 (Accurate to within ±1%). If the meter has a load smaller than the Imin (minimum current) we cannot guarantee class 1 accuracy.

Power factor and Frequency and Max. Demand
- Frequency in Hz
- Instantaneous power:
- Power 0 to 3600 MW
- Reactive power 0 to 3600 MVAr
- Volt-amps 0 to 3600 MVA
- Maximum demanded power since last Demand reset Power factor

Energy Measurements

Imported/Exported active energy	0 to 99999.99 kWh
Imported/Exported reactive energy	0 to 99999.99 kVArh
Total active energy	0 to 99999.99 kWh
Total reactive energy	0 to 99999.99 kVArh

Measured Inputs

Voltage inputs through 2 way fixed connectors with 35mm² maximum stranded wire capacity.

Nominal Voltage Input	(Ph+N) 176 to 276V
Max Continuous Voltage	120% of nominal
Nominal Input Current	0.5-10(100)A
Max Continuous Current	120% of nominal
Nominal Input Current Burden	0.5VA
Frequency	50/60Hz(±10%)

Accuracy

Voltage	0·5% of range maximum
Current	0·5% of nominal
Frequency	0·2% of mid-frequency
Power factor	1% of unity (0.01)
Active power (W)	±1% of range maximum
Reactive power (VAr)	±1% of range maximum
Apparent power (VA)	±1% of range maximum
Active energy (Wh)	Class 1 IEC 62053-21
Reactive energy (VARh)	±1% of range maximum

Interfaces for External Monitoring

Two interfaces are provided:

- RS485 communication channel that can be programmed for Modbus RTU protocol
- Relay output indicating real-time measured energy.(configurable)

The Modbus configuration (baud rate etc.) and the pulse relay output assignments (kW/kVArh, import/export etc.) are configured through the set-up screens

Pulse Output

The meter provides two pulsed outputs, both pulsed outputs are passive type. The first pulsed output is configurable. The pulsed output can be set to read total / import / export/ kWh /kVarh. The pulse constant can be set to generate 1 pulse per: 0.001(default) /0.01/0.1/1kWh/kVarh. The second pulsed output is non-configurable. It is fixed to read total kWh.

Rate can be set to generate 1 pulse per:
0.001 = 1 Wh/VArh (default)
0.01 = 10 Wh/VArh
0.1 = 100 Wh/VArh
1 = 1 kWh/kVArh

Pulse width 200/100/60 ms.

RS485 Output for Modbus RTU

For Modbus RTU, the following RS485 communication parameters can be configured from the set-up menu:

Baud rate 1200, 2400, 4800, 9600.
Parity none (default) / odd / even
Stop bits 1 or 2
RS485 network address 3-digit number, 1 to 247

Reference Conditions of Influence Quantities

Influence Quantities are variables that affect measurement errors to a minor degree. Accuracy is verified under nominal value (within the specified tolerance) of these conditions.

Ambient temperature	23°C ±1°C
Input waveform	50/60Hz ±2%
Input waveform	Sinusoidal (distortion factor < 0·005)
Auxiliary supply voltage	Nominal ±1%
Auxiliary supply frequency	Nominal ±1%
Auxiliary supply waveform (if AC)	Sinusoidal (distortion factor < 0·05)
Magnetic field of external origin	Terrestrial flux

Environment

Operating temperature Storage temperature	-25°C to +55°C∗ -40°C to +70°C∗
Relative humidity	0 to 95%, non-condensing
Altitude	Up to 3000m
Warm up time	1 minute
Vibration	10Hz to 50Hz, IEC 60068-2-6, 2g
Shock	30g in 3 planes

∗Maximum operating and storage temperatures are in the context of typical daily and seasonal variation.

Mechanics

DIN rail dimensions	mm x mm (WxH) per DIN 43880
Mounting	DIN rail (DIN 43880)
Sealing	IP51 indoor
Material	Self-extinguishing UL 94 V-0Energy Measurements

NR10

DIN RAIL MULTIFUNCTION POWER METER

3. Dimensions

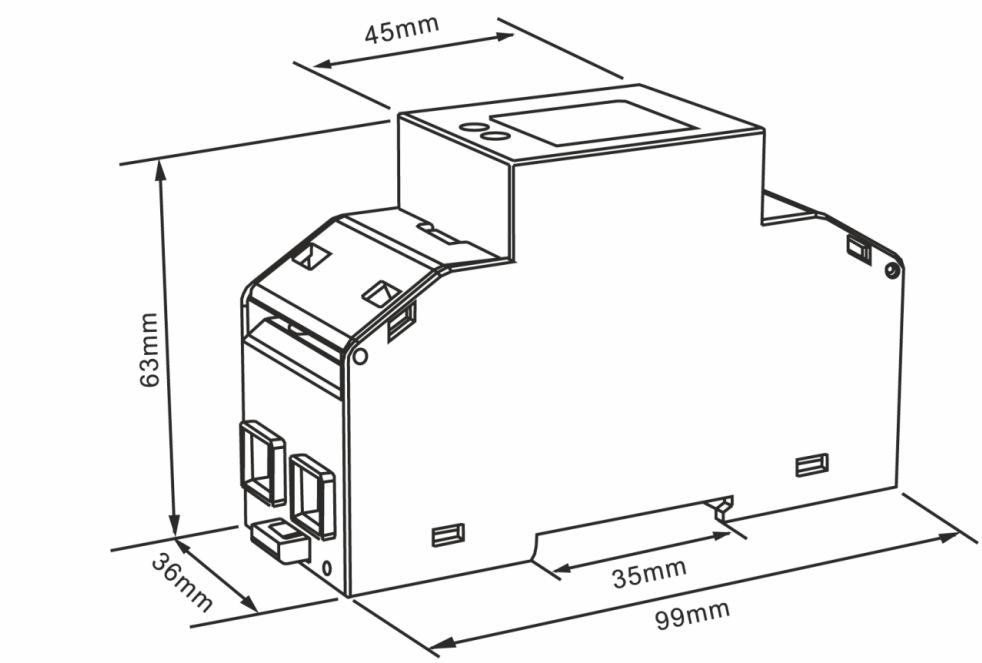

4. Installation

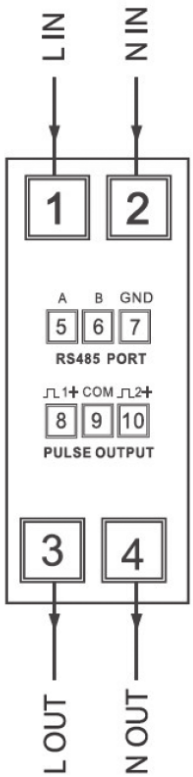

5. Ordering code

Ordering code: **NR10**

The code **NR10** means**:** DIN rail multifunction power meter NR10.

Castel Maggiore (BO) 40013
Via Lirone 60/i

e-mail: info@eurotecsrl.com
Tel: +39 051/6321595
Website: www.eurotecsrl.com

C.F.: 04103780377
P.I.: 01596581205