EUROTEC
TECNOLOGIE IMPIANTISTICHE - AUTOMAZIONE - TELECONTROLLO

LUMEL
EVERYTHING COUNTS

ND25

POWER NETWORK METER

Modbus RTU

Modbus TCP/IP

BACnet

ND25 - POWER NETWORK METER

LUMEL
EVERYTHING COUNTS

ND25 *measures important electrical parameters in 3 phase 4 wire,3 phase 3 wire and1 phase 2 wire Network*. It displays many parameters at a glance. *It measures electrical parameters like Active / Reactive / Apparent energy , power and all basic parameter. The instrument has two optional outputs. It can be configured as pulse output for energy measurement , limit output , timer function and RTC relay.*

Applications:

- Internal Energy billing/monitoring/auditing
- Sub-metering
- Electrical load monitoring
- Genset, TestBenches and Laboratories

Product Features:

Energy as per IEC 62053:

- *ND25 is available in Accuracy class 0.2s or 0.5s option.*
- *Active Energy accuracy 0.5s as per 62053-22 or optional 0.2s as per 62053-22*
- *Independent Import and Export Energy counter. Active energy (kWh), Reactive energy (kVArh), Apparent energy (kVAh) measurement.*

THD and Individual Harmonics Measurement:

- *The instrument measures per phase THD and individual harmonic up to 31st harmonics for voltage & current .*

Limit (Alarm) or Pulse or RTC relay or Timer Relay Output (optional)

- *Potential free, very fast acting relay contact. Configurable as pulse output which can be used to drive an external counter for energy measurement. Configurable as limit (alarm) switch.*
- *RTC relay can be used to control some instrument automatically over the period of a week repetitively.*
- *Timer output can be used to operate relay in cyclic manner.*

USB Interface:

- *Isolated USB Interface for configuration of the Instrument, onsite access of measured parameter and downloading of logged data.*

User Assignable Screens

- *Instrument measures more than 85 parameters and these parameters are displayed through 28 different screens. For some applications user does not require all 28 screens, only few screens are required.*
- *So to have flexibility, Lumel has added feature "User assignable screens". In which user can select minimum 1no. and maximum 10 nos. of screens out of 28 screens as per application requirement.*
- *For example: If 5 screens are selected out of 28 screens, then display will scroll among that 5 selected screens.*

RTC(Real Time Clock):

- *Inbuilt real time clock for display of date and time, along with time stamping for data logging and Event recording.*

Data logging:

Meter has inbuilt 8MB Flash for datalogging.

- **Event Logging***: Previous 5 events of factory default parameters can be logged with Date and time.*
- **Time based logging***: User selectable parameters (1 to 30) can be logged at regular intervals(1 to 60min) with Date and Time stamp in internal memory and and can be accessed via Modbus or Ethernet or USB.*
- *If 1 Parameter for example energy is selected with logging interval of 15 minutes, log of maximum 948 days are available for user.*
- *If 30 Parameters are selected with logging interval of 60 minutes, log of maximum 355 days are available for user.*
- **Load Profile logging** *: Logging of energy consumed and peak Demand(Power and Current) in a day and in month for efficient tracking of load behaviors. Maximum 1 year daily and 14years of monthly log is available for user.*

Big LCD display with Back-lit :

- *LCD shows* 4 measurement parameters along with 9 digit energy parameter at a glance. It also shows load graphics and phase rotation symbol

Direct remote access(Optional):

- *Remote configuration of the Instrument and access of measured parameter via Modbus or through Ethernet interface(Modbus TCP/IP) or BACnet protocol.*

Compliance to International Safety standards

- *Compliance to International Safety standard IEC 61010-1- 2010*

EMC Compatibility

- *Compliance to International standard IEC 61326*

Dimensions Details:

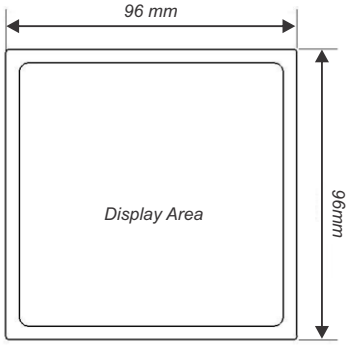

Front View

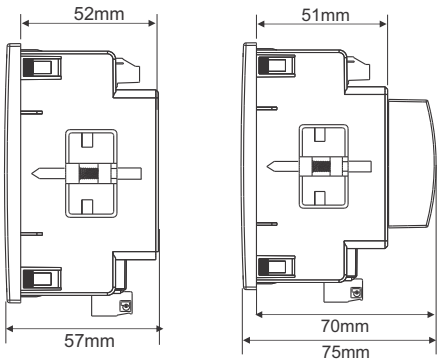

Side View

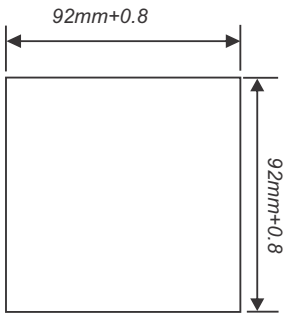

Panel Cutout

Technical Specifications:

Input Voltage:	
Nominal input voltage (AC RMS) programmable on site.	100VLL to 600 VLL 57.5VLN to 346.42 VLN
System PT primary values	100VLL to 1200kVLL programmable on site.
Max continuous input voltage	120% of nominal value
Overload Withstand:	2 x rated value for 1 second, repeated 10 times at 10 second intervals
Overload Indication	"-OL-" >121% of Nominal value
Nominal input voltage burden	< 0.3VA approx. per phase(at nominal 240V)
Input Current:	
Nominal input current	1A / 5A onsite programmable
System CT primary values	From 1A to 9999A
Max continuous input current	120% of nominal value
Overload Indication	"-OL-" >121% of Nominal value
Nominal input current burden	< 0.3VA approx. per phase
Overload Withstand:	20 x rated value for 1 second, repeated 5 times at 5 minute intervals
Auxiliary Supply:	
Auxiliary supply range	100-550V AC/DC
Aux Supply frequency	45 to 65 Hz range
Auxiliary Supply burden (at 230V AC DC)	
With Addon card	< 6VA approx.
With Ethernet card	< 8 VA approx.
Operating Measuring Ranges:	
Current (Energy Measurement)	1....120% of nominal value
Starting current : as per Standard IEC62053-22(0.5s)	
as per Standard IEC62053-22(Class 0.2s)(optional)	
Voltage	20... 120% of nominal value
Power Factor	0.5 Lag ... 1... 0.8 Lead
Frequency	45Hz to 66Hz
Reference Conditions for Accuracy	
Reference temperature	23°C +/- 2°C
Input Waveform	Sinusoidal(distortion factor 0.005)
Input frequency	50/60 Hz ± 2%
Auxilary supply frequency	50/60 Hz ± 1%
Total Harmonic distortion	50% up to 15th Harmonics 10% up to 31st Harmonics (Current range 20%...100% of nominal value)
Voltage range	50%.....100% of nominal value
Accuracy	
Active Energy	Class 0.5s as per IEC 62053 - 22 Class 0.2s as per IEC 62053- 22(optional)
Apparent Energy	Class 1
Reactive Energy	Class 2 as per IEC 62053 - 23

LUMEL
EVERYTHING COUNTS

Electrical Connection:

Network Types :

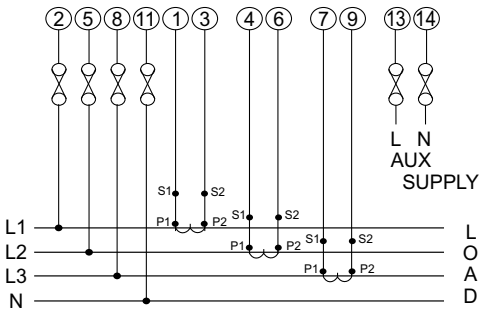

a) 3 Phase 4 Wire

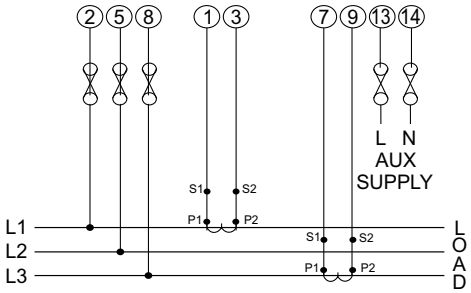

b) 3 Phase 3 Wire

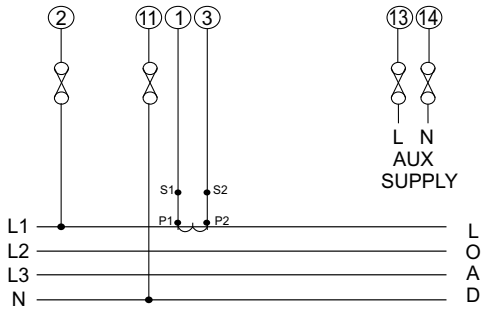

c) Single Phase Load

It is recommended that the wires used for connections to the instrument should have lugs soldered at the end. That is, the connections should be made with Lugged wires for secure connections.

Technical Specifications:

Accuracy

	Class 0.5s (Standard)	Class 0.2s (on request)
Voltage	± 0.5% of Nominal value	± 0.2% of Nominal value
Current	± 0.5% of Nominal value	± 0.2% of Nominal value
Frequency	± 0.2% of mid frequency	± 0.2 % of mid frequency
Active Power	± 0.5% of Nominal value	± 0.2% of Nominal value
Re-Active Power	± 1.0% of Nominal value	± 1.0% of Nominal value
Apparent Power	± 0.5% of Nominal value	± 0.2% of Nominal value
Power Factor/ angle	±3°	±3°
THD (Voltage / Current)	±3%	±3%

Display update rate:

Response time to step input	*1 sec approx.*

Applicable Standards:

EMC	*IEC 61326 - 1 : 2012*
Immunity	*IEC 61000-4-3. 10V/m – Level 3 industrial Low level*
Safety	*IEC 61010-1-2010 , Permanently connected use*
IP for water & dust	*IEC60529*
Pollution degree:	*2*
Installation category:	*III*

Isolation:

Protective Class	*2*
High voltage test	
Input+Aux Vs Surface	*4kV RMS, 50Hz,1min*
Input Vs Remaining Circuit	*3.3kV RMS,50Hz,1min*

Environmental

Operating temperature	*-20 to +70°C*
Storage temperature	*-25 to +75°C*
Relative humidity	*0... 95%RH (non condensing)*
Warm up time	*Minimum 3 minute*
Shock (As per IEC60068-2-27)	*Half sine wave, Peak acceleration 30gn (300 m/s^2),duration 18ms.*
Vibration	*10... 150...10 Hz, 0.15mm amplitude*
Number of Sweep cycles	*10 per axis*
Enclosure	*IP 20 (Terminal side) and IP50(Front side)*

Interfaces

Impulse Led	For Energy testing
Relay(Optional)	*250 VAC,5 A AC 30VDC, 5A DC*
Modbus (Optional)	*RS485,max.1200m Baud rate : 4.8k,9.6k,19.2k,38.4k ,57.6kbps.*
Ethernet (Optional)	*Ethernet access on Modbus TCP/IP Protocol. or BACnet IP version 12*

Memory calculations for Time based datalogging :

Max Memory Locations = 273030

Actual parameter stored in Each log = Date +time+Number of parameter selected by user

for ex. Number of parameter selected by user = 1.

Actual parameter stored in Each log = 1(Date) +1(time)+ 1 = 3

Maximum log that can be stored = Max Memory Location/Actual parameter stored in Each log

=273030/3= 91010

Timelog Interval setting = 15 minutes

*Log in one day = (60 /Timelog Interval setting) * 24*

*=(60/15)*24 = 96*

Max Days = Maximum log that can be stored / log in one day

= 91010/ 96 = 948.20 days

Measured Parameter System wise:

✓ : *Available* × : *Not Available*

Sr No	Parameters	3 Phase 4Wire	3Phase 3Wire	1Phase 2Wire
1.	Import Active Energy[1]	✓	✓	✓
2.	Export Active Energy[1]	✓	✓	✓
3.	Inductive Reactive Energy[1]	✓	✓	✓
4.	Capacitive Reactive Energy[1]	✓	✓	✓
5.	Apparent Energy[1]	✓	✓	✓
6.	System Active Power (kW)	✓	✓	✓
7.	Active Power L1 (kW)	✓	×	×
8.	Active Power L2 (kW)	✓	×	×
9.	Active Power L3 (kW)	✓	×	×
10.	System Re-active Power (kVAr)	✓	✓	✓
11.	Re-active Power L1 (kVAr)	✓	×	×
12.	Re-active Power L2 (kVAr)	✓	×	×
13.	Re-active Power L3 (kVAr)	✓	×	×
14.	System Apparent Power (kVA)	✓	✓	✓
15.	Apparent Power L1 (kVA)	✓	×	×
16.	Apparent Power L2 (kVA)	✓	×	×
17.	Apparent Power L3 (kVA)	✓	×	×
18.	System Power Factor	✓	✓	✓
19.	Power Factor L1	✓	×	×
20.	Power Factor L2	✓	×	×
21.	Power Factor L3	✓	×	×
22.	System Phase Angle	✓	✓	✓
23.	Phase Angle L1	✓	×	×
24.	Phase Angle L2	✓	×	×
25.	Phase Angle L3	✓	×	×
26.	Current Demand	✓	✓	✓
27.	kVA Demand	✓	✓	✓
28.	Import kW Demand	✓	✓	✓
29.	Export kW Demand	✓	✓	✓
30.	Inductive Var Demand	✓	✓	✓
31.	Capacitive Var Demand	✓	✓	✓
32.	Max Current Demand	✓	✓	✓
33.	Max kVA Demand	✓	✓	✓
34.	Max Import kW Demand	✓	✓	✓
35.	Max Export kW Demand	✓	✓	✓

LUMEL EVERYTHING COUNTS

Measured Parameter System wise:

✓ : Available × : Not Available

Sr No	Parameters	3 Phase 4Wire	3Phase 3Wire	1Phase 2Wire
36.	Max Inductive Var Demand	✓	✓	✓
37.	Max Inductive Var Demand	✓	✓	✓
38.	Run Hour	✓	✓	✓
39.	On Hour	✓	✓	✓
40.	Number of Interruptions	✓	✓	✓
41.	System Voltage	✓	✓	✓
42.	Voltage L1	✓	×	×
43.	Voltage L2	✓	×	×
44.	Voltage L3	✓	×	×
45.	Voltage L12	✓	✓	×
46.	Voltage L23	✓	✓	×
47.	Voltage L31	✓	✓	×
48.	System Voltage THD	✓	✓	✓
49.	Voltage L1 THD	✓	✓	×
50.	Voltage L2 THD	✓	✓	×
51.	Voltage L3 THD	✓	✓	×
52.	System Current	✓	✓	✓
53.	Current L1	✓	✓	×
54.	Current L2	✓	✓	×
55.	Current L3	✓	✓	×
56.	System Current THD	✓	✓	✓
57.	Current L1 THD	✓	✓	×
58.	Current L2 THD	✓	×	×
59.	Current L3 THD	✓	✓	×
60.	Individual Harmonics of VL1(Up to 31st Harmonics)	✓	✓	✓
61.	Individual Harmonics of VL2 (Up to 31st Harmonics)	✓	✓	×
62.	Individual Harmonics VL3 (Up to 31st Harmonics)	✓	✓	×
63.	Individual Harmonics IL1(Up to 31st Harmonics)	✓	✓	✓
64.	Individual Harmonics IL2(Up to 31st Harmonic)	✓	×	×
65.	Individual Harmonics IL3(Up to 31st Harmonics	✓	✓	×
66.	Neutral Current	✓	×	×
67.	Frequency	✓	✓	✓
68.	RPM	✓	✓	✓
69.	Phase Reversal Indication	✓	×	×
70.	Current Reversal Indication	✓	×	✓
71.	Phase Absent Indication	✓	×	×
72.	Old Import Active Energy[2]	✓	✓	✓
73.	Old Export Active Energy[2]	✓	✓	✓
74.	Old Inductive Reactive Energy[2]	✓	✓	✓
75.	Old Capacitive Reactive Energy[2]	✓	✓	✓
76.	Old Apparent Energy[2]	✓	✓	✓
77.	Old Run Hour[2]	✓	✓	✓
78.	Old On Hour[2]	✓	✓	✓
79.	Old Number of Interruptions[2]	✓	✓	✓
80.	Old Max kW Import Demand[2]	✓	✓	✓
81.	Old Max kW Export Demand[2]	✓	✓	✓
82.	Old Max Var Inductive Demand[2]	✓	✓	✓
83.	Old Max Var Capacitive Demand[2]	✓	✓	✓
84.	Old Max VA Demand[2]	✓	✓	✓
85.	Old Max A Demand[2]	✓	✓	✓

Note: 1. Energy on display is autoranging & unit for Energy parameters on modbus are dependent on CT PT ratio or unit selected by user.
2. Parameters are available only on modbus.

Measured Parameter Model wise:

✓ : Available × : Not Available

Sr No	Parameters	Advanced version	Basic version
1.	Import Active Energy[1]	✓	✓
2.	Export Active Energy[1]	✓	✓
3.	Inductive Reactive Energy[1]	✓	✓
4.	Capacitive Reactive Energy[1]	✓	✓
5.	Apparent Energy[1]	✓	✓
6.	System Active Power (kW)	✓	✓
7.	Active Power L1 (kW)	✓	✓
8.	Active Power L2 (kW)	✓	✓
9.	Active Power L3 (kW)	✓	✓
10.	System Re-active Power (kVAr)	✓	✓
11.	Re-active Power L1 (kVAr)	✓	✓
12.	Re-active Power L2 (kVAr)	✓	✓
13.	Re-active Power L3 (kVAr)	✓	✓
14.	System Apparent Power (kVA)	✓	✓
15.	Apparent Power L1 (kVA)	✓	✓
16.	Apparent Power L2 (kVA)	✓	✓
17.	Apparent Power L3 (kVA)	✓	✓
18.	System Power Factor	✓	✓
19.	Power Factor L1	✓	×
20.	Power Factor L2	✓	×
21.	Power Factor L3	✓	×
22.	System Phase Angle	✓	✓
23.	Phase Angle L1	✓	×
24.	Phase Angle L2	✓	×
25.	Phase Angle L3	✓	×
26.	Current Demand	✓	×
27.	kVA Demand	✓	×
28.	Import kW Demand	✓	×
29.	Export kW Demand	✓	×
30.	Inductive Var Demand	✓	×
31.	Capacitive Var Demand	✓	×
32.	Max Current Demand	✓	×
33.	Max kVA Demand	✓	×
34.	Max Import kW Demand	✓	×
35.	Max Export kW Demand	✓	×
36.	Max Inductive Var Demand	✓	×
37.	Max Capacitive Var Demand	✓	×
38.	Run Hour	✓	✓
39.	On Hour	✓	✓
40.	Number of Interruptions	✓	✓
41.	System Voltage	✓	✓
42.	Voltage L1	✓	✓
43.	Voltage L2	✓	✓
44.	Voltage L3	✓	✓
45.	Voltage L12	✓	✓
46.	Voltage L23	✓	✓
47.	Voltage L31	✓	✓
48.	System Voltage THD	✓	✓
49.	Voltage L1 THD	✓	×
50.	Voltage L2 THD	✓	×
51.	Voltage L3 THD		

LUMEL
EVERYTHING COUNTS

Measured Parameter Model wise:

✓ : Available *× : Not Available*

Sr No	Parameters	Advanced version	Basic version
52.	System Current	✓	✓
53.	Current L1	✓	✓
54.	Current L2	✓	✓
55.	Current L3	✓	✓
56.	System Current THD	✓	✓
57.	Current L1 THD	✓	×
58.	Current L2 THD	✓	×
59.	Current L3 THD	✓	×
60.	Individual Harmonics of VL1(Up to 31st Harmonics)	✓	×
61.	Individual Harmonics of VL2 (Up to 31st Harmonics)	✓	×
62.	Individual Harmonics VL3 (Up to 31st Harmonics)	✓	×
63.	Individual Harmonics IL1(Up to 31st Harmonics)	✓	×
64.	Individual Harmonics IL2(Up to 31st Harmonic)	✓	×
65.	Individual Harmonics IL3(Up to 31st Harmonics	✓	×
66.	Neutral Current	✓	✓
67.	Frequency	✓	✓
68.	RPM	✓	✓
69.	Phase Reversal Indication	✓	✓
70.	Current Reversal Indication	✓	✓
71.	Phase Absent Indication	✓	✓
72.	Old Import Active Energy [2]	✓	×
73.	Old Export Active Energy [2]	✓	×
74.	Old Inductive Reactive Energy [2]	✓	×
75.	Old Capacitive Reactive Energy [2]	✓	×
76.	Old Apparent Energy [2]	✓	×
77.	Old Run Hour [2]	✓	×
78.	Old On Hour [2]	✓	×
79.	Old Number of Interruptions [2]	✓	×
80.	Old Max Current Demand [2]	✓	×
81.	Old Max VA Demand [2]	✓	×
82.	Old Max Import W Demand [2]	✓	×
83.	Old Max Export W Demand [2]	✓	×
84.	Old Max Inductive VAr Demand [2]	✓	×
85.	Old Max Capacitive VAr Demand [2]	✓	×

Note: 1. Energy on display is autoranging & unit for Energy parameters on modbus are dependent on CT PT ratio or unit selected by user.
2. Parameters are available only on modbus.

ND25 - POWER NETWORK METER

LUMEL
EVERYTHING COUNTS

Order Code:

ND25	X	3	01	02	X	H	X	00	X	X

Variant:

Basic variant*	3
Advanced variant	4

System:

3PH 3W/4W	3

Input Voltage:

100-600VLL	01

Input Current:

CT-1/5A	02

Communication:

RS485+2P	R
Ethernet	E
Ethernet+DL+RTC	D
RS485+2P+USB+DL+RTC	U
BACnet IP protocol+DL+RTC	B
Not used	Z

Power Supply:

100-550AC/DC	H

Class:

0.2S	2
0.5S*	5

Version:

standard	00

Language:

Polish	P
English	E

Acceptance tests:

without additional quality requirements	0
with an extra quality inspection certificate	1
with a calibration certificate	2

* variant not available in the BACnet meter version

Castel Maggiore (BO) 40013
Via Lirone 60/i

e-mail: info@eurotecsrl.com
Tel: +39 051/6321595
Website: www.eurotecsrl.com

C.F.: 04103780377
P.I.: 01596581205

LUMEL
EVERYTHING COUNTS