EUROTEC
TECNOLOGIE IMPIANTISTICHE - AUTOMAZIONE - TELECONTROLLO

LUMEL
EVERYTHING COUNTS

POWER NETWORK METER

ND20CT

USER'S MANUAL

CE

Contents

1 APPLICATION 3
2 METER SET 3
3 BASIC REQUIREMENTS, OPERATIONAL SAFETY 3
4 INSTALLATION 4
5 METER DESCRIPTION 5
5.1 Current inputs 5
5.2 Voltage inputs 5
5.3 Connection diagrams 5
6 ND20CT PROGRAMMING 9
6.1 Frontal panel 9
6.2 Messages after Switching the Supply on 10
6.3 Monitoring of Parameters 10
6.4 Operating Modes: 13
6.5 Parameter Settings 14
6.5.1 Setting of Meter Parameters 16
6.5.2 Setting of Output Parameters 17
6.5.3 Setting of Alarm Parameters 18
6.5.4 Setting displayed quantities 22
7 UPDATING SOFTWARE 23
8 RS-485 INTERFACE 24
8.1 MAP OF ND20CT REGISTERS 26
9 ERROR CODES 34
10 TECHNICAL DATA 35
11 ORDERING CODES 38
12 ACCESSORIES 38
12.1 LJ series current transformers with RJ12 connector 38
12.2 Current transformers of L3xx series for screw terminal connection 40
12.3 Splitter 42

1 APPLICATION

ND20CT meter is a digital programmable panel meter designed to measure parameters of single-phase 2-wire and three-phase 3 and 4-wire power networks, working with external current transformers:
- 3-phase with RJ12 connector and 100 mA output, LJ series integrated in one housing,
- 1 phase with RJ11 connector and 100 mA LJ output, via splitter,
- 3-phase with wires for screw terminals and 250 mA output, L3xx series integrated in one housing,

The use of RJ12 connectors makes the connection of the current transformers fast, easy, reliable and eliminates faulty connections.
Measured values are shown on a dedicated LCD display. The meter enables controlling and optimizing the operation of power electronics devices, systems and industrial installations.
It provides measurement of: RMS voltage and current, active, reactive and apparent power, active and reactive energy, power factor, frequency, 15-, 30-, 60-minute mean active power, THD measurement. Additionally, the current value in the neutral wire is calculated. Voltages and currents are multiplied by given voltage and current ratios of measuring transformers Indications of power and energy take into consideration values of programmed ratios. The value of each measured quantity can be transmitted to the master system through the RS-485 interface. The relay output signals the overflow of the chosen quantity, and the impulse output can be used for the consumption check of 3-phase active and reactive energy. The meter has the detection and signaling of an incorrect phase sequence.
The meter has a galvanic separation between respective blocks:
- power supply,
- RS-485 output,
- impulse output,
- analog output,
- voltage and current inputs.

The voltage and current inputs are not separated from each other - they are on a common potential.

2 METER SET

Complete set of the Analyzer includes:

- ND20CT meter	1 pc.
- User’s Manual:	1 pc.
- warranty card	1 pc
- seal	1 pc
- holders to fix the meter in the panel	4 pcs.

3 BASIC REQUIREMENTS, OPERATIONAL SAFETY

In terms of operational safety, the meter meets the requirements of EN 61010-1.

Safety instructions:

- The meter installation and connection should be made by qualified personnel. All available protection requirements must by taken into consideration.
- Before turning on the meter verify the connections.
- Prior to removing the meter housing, always turn the supply off and disconnect the measurement circuits.
- Before removing the connection cable from the RJ12 connector, make sure that the circuit is disconnected because hazardous voltage can occur on the plug of the connecting cable.
- Removal of the meter housing during the warranty period voids the warranty.
- The meter meets the requirements for electromagnetic compatibility in industrial environment.
- A switch or a circuit-breaker should be installed in the building or facility. It should be located near the device, easily accessible to the operator, and suitably marked.

4 INSTALLATION

The synchronizing unit is adapted to be fixed to the panel by means of holders, according to fig. 1. The housing of the meter is made of plastic.

Housing dimensions are 96 x 96 x 77 mm. Outside the meter there are screw terminal strips that allow connection of external wires with a cross-section up to 2.5 mm^2.

A cut-out of 92.5+0.6 x 92.5+0.6 mm must be made in the panel. The thickness of the material from which the panel is made must not exceed 6 mm. The meter should be inserted from the front of the panel with the power supply disconnected. After inserting into the hole, fix the meter by means of holders

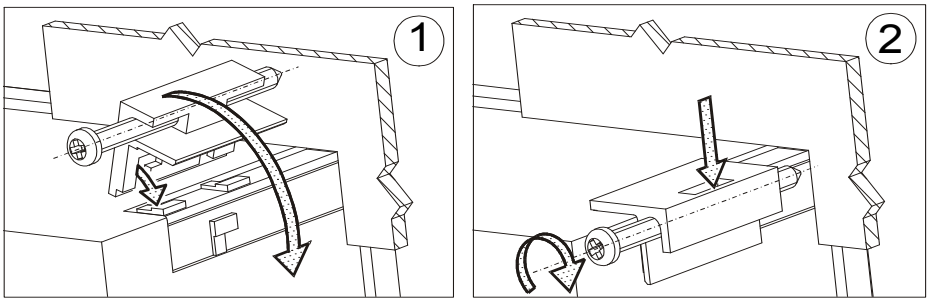

Fig. 1: Meter fitting

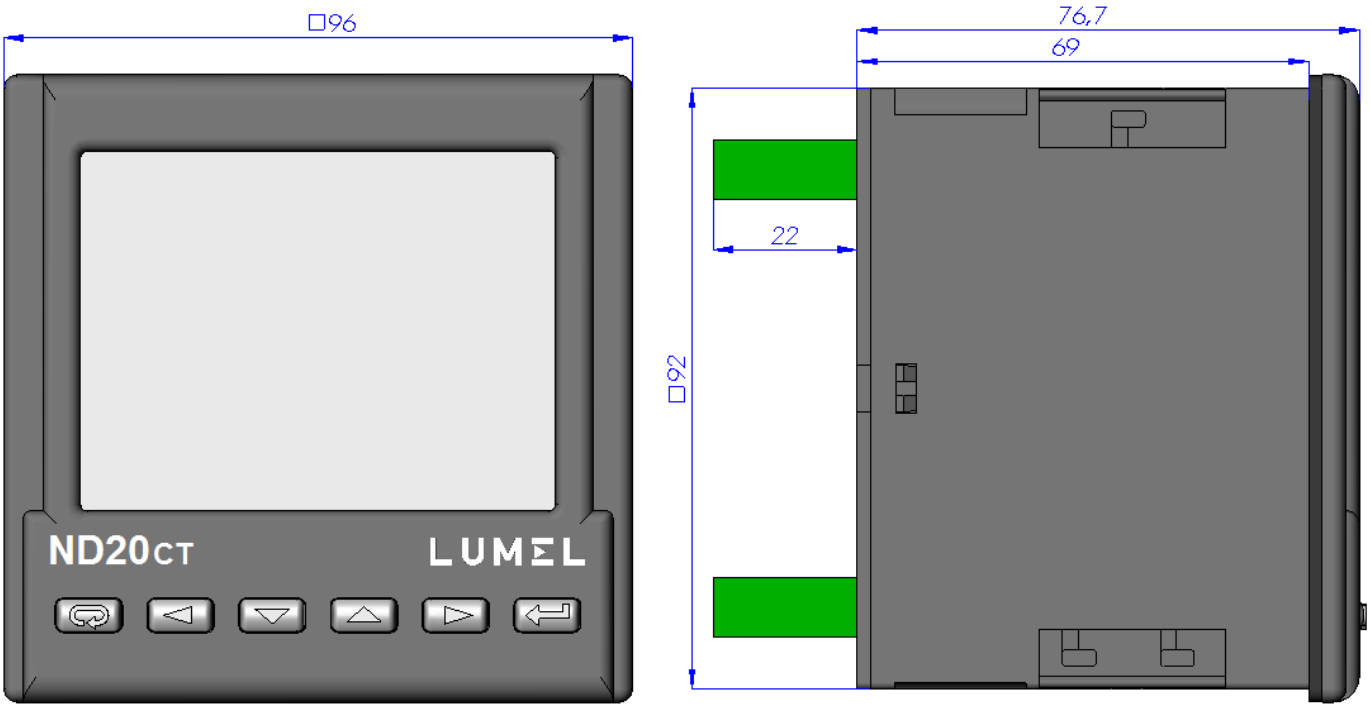

Fig. 2: Meter overall dimensions

5 METER DESCRIPTION

5.1 Current inputs

The meter is adjusted to work with external measuring current transformers with 100 mA outputs (RJ12 connector) or 250 mA outputs (screw terminals). Displayed values of currents and derivative quantities are automatically converted according to the introduced external current transformer ratio.

5.2 Voltage inputs

Quantities on voltage inputs are automatically converted acc. to the introduced ratio of the external voltage transformer Voltage inputs are defined in the order as 3 x 57.7/100 V or 3 x 230/400 V.

5.3 Connection diagrams

a)

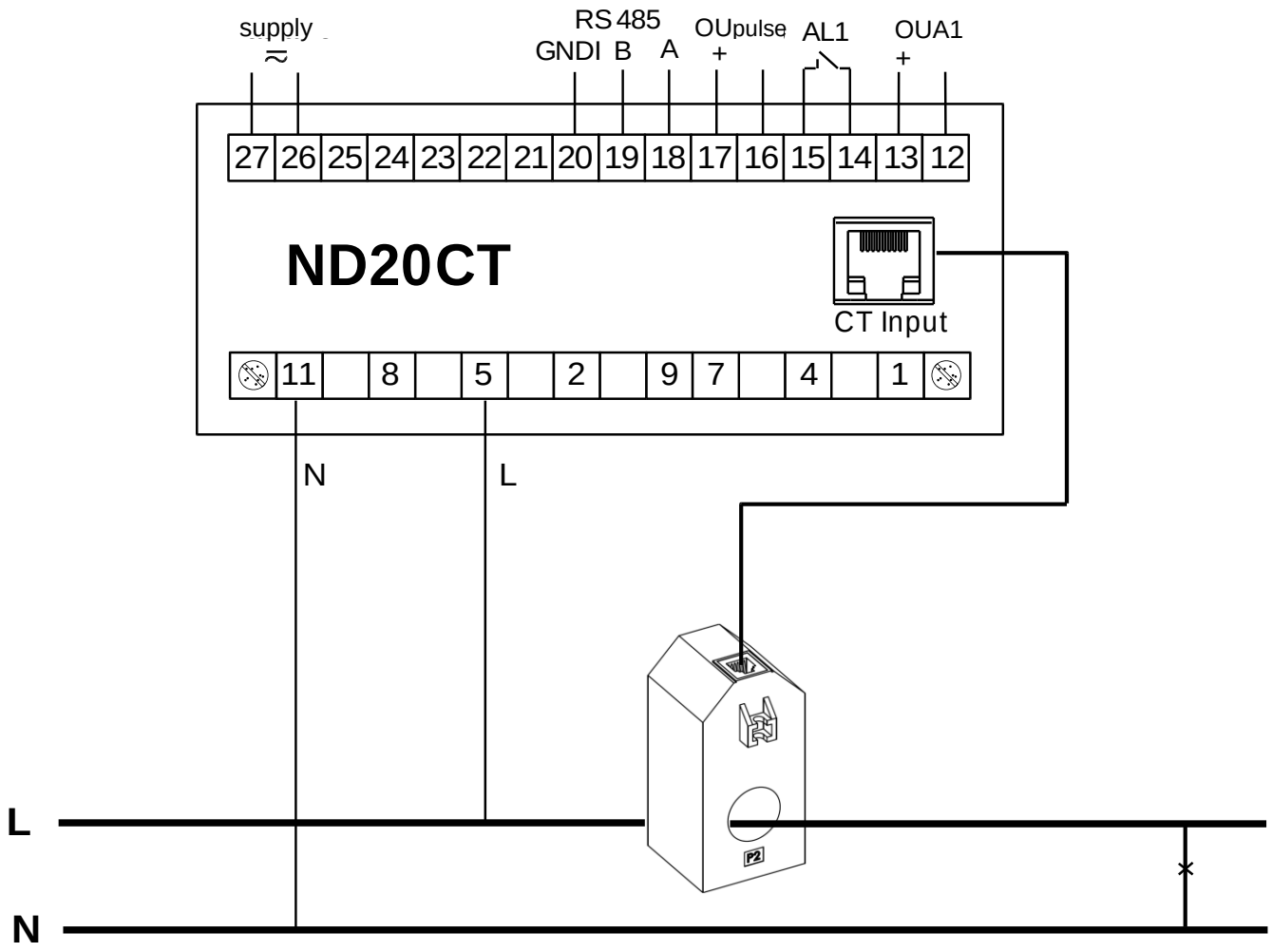

b)

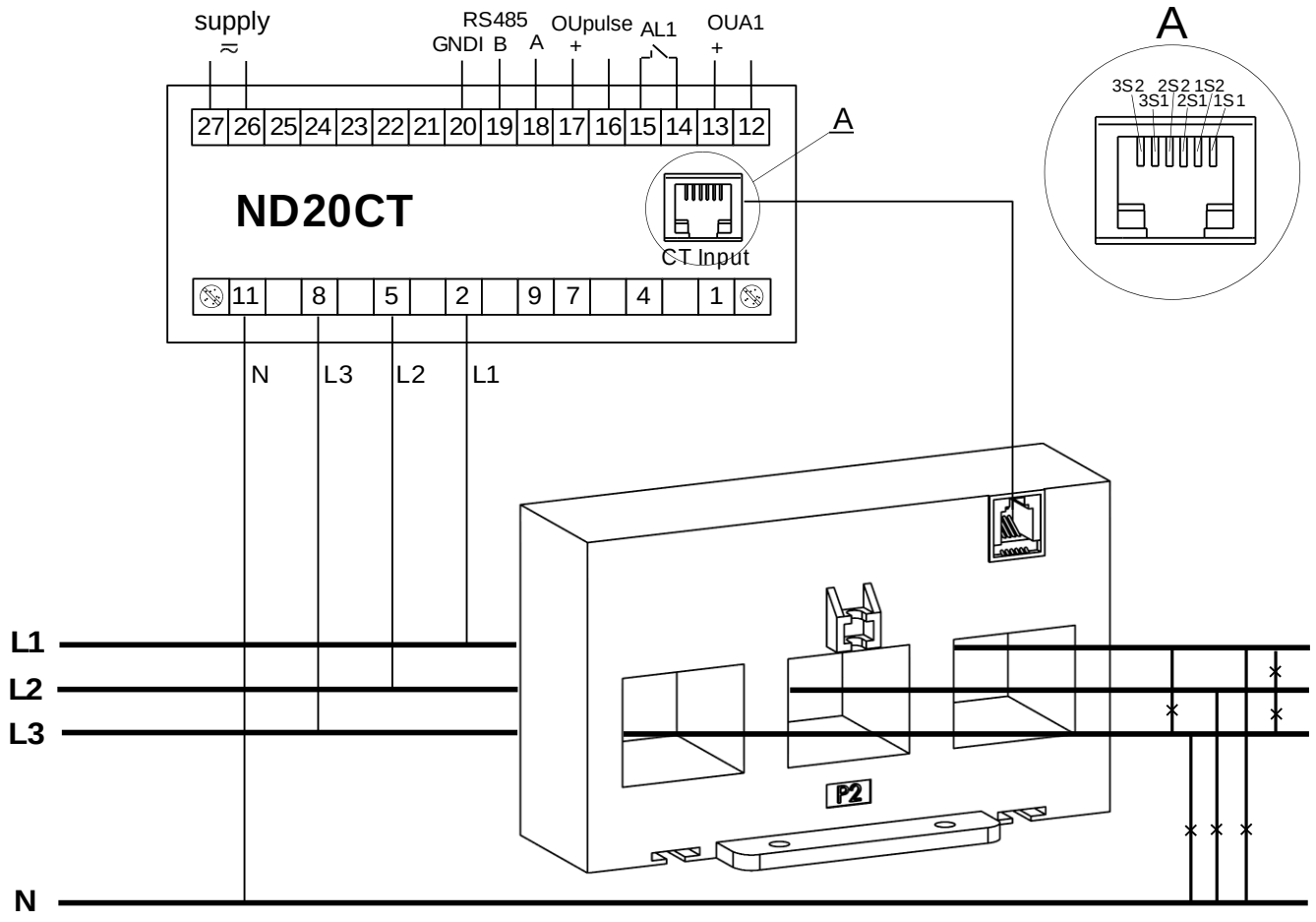
supply
≈
RS485
GNDI B A
OUpulse
+
AL1
OUA1
+
27 26 25 24 23 22 21 20 19 18 17 16 15 14 13 12
ND20CT
A
CT Input
11 8 5 2 9 7 4 1
N L3 L2 L1
A
3S2 2S2 1S2
3S1 2S1 1S1
L1
L2
L3
N
P2

c)

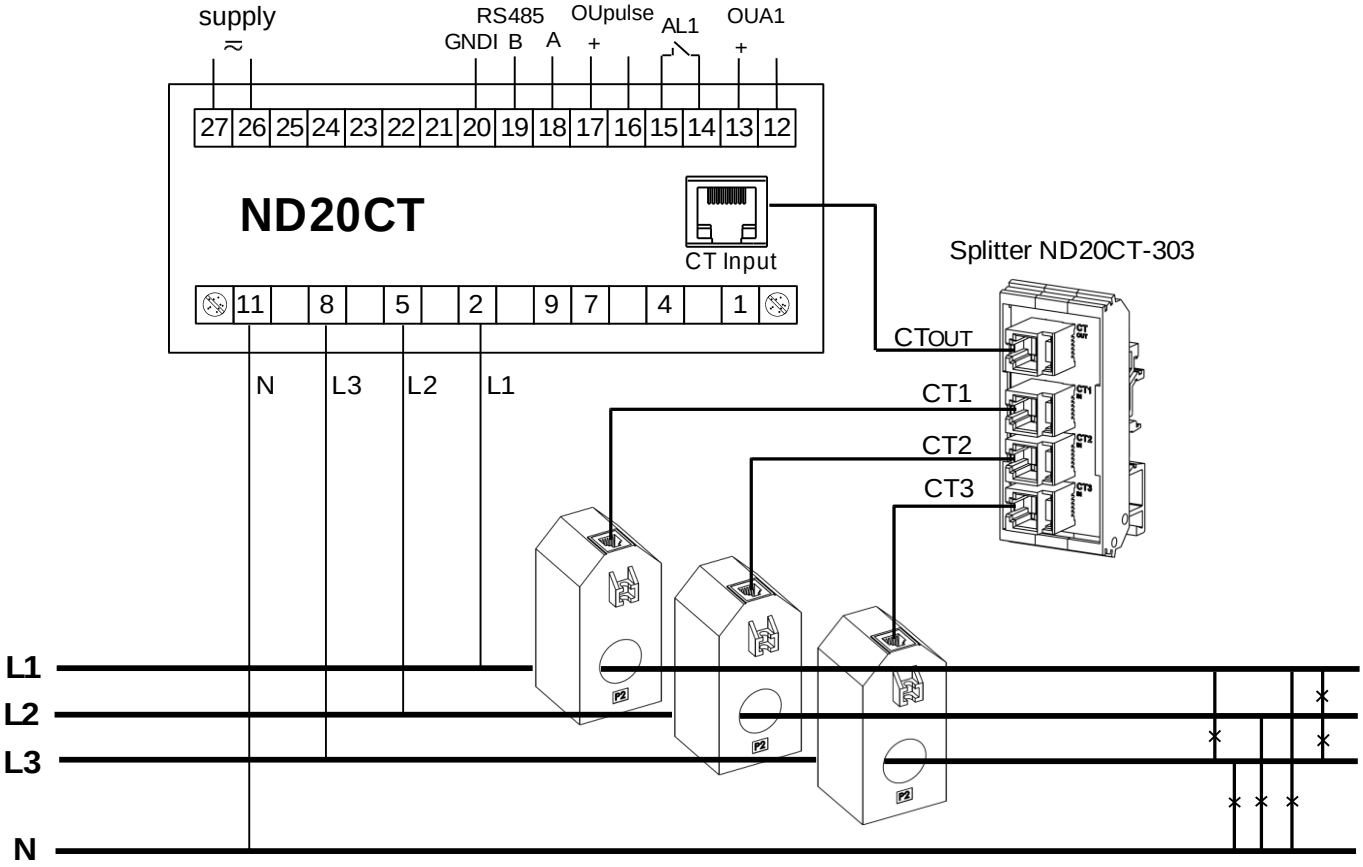
supply
≈
RS485
GNDI B A
OUpulse
+
AL1
OUA1
+
27 26 25 24 23 22 21 20 19 18 17 16 15 14 13 12
ND20CT
CT Input
11 8 5 2 9 7 4 1
N
L3
L2
L1
Splitter ND20CT-303
CTOUT
CT1
CT2
CT3
L1
L2
L3
N

d)

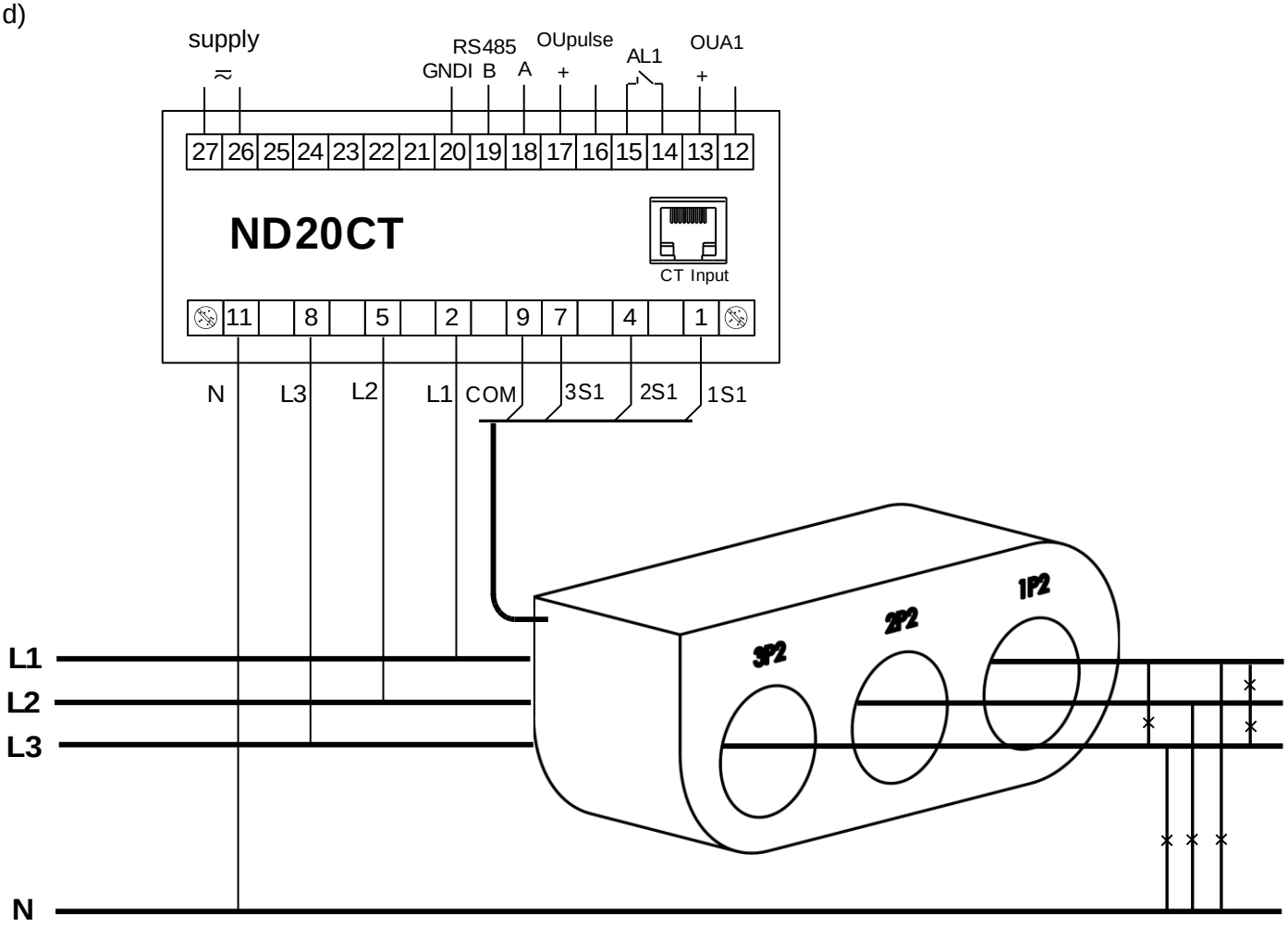

Fig. 3: Examples of meter connections:
a) with a 1-phase current transformer with RJ12 output,
b) with a 3-phase current transformer with RJ12 output,
c) with 3 1-phase current transformers connected via a splitter,
d) with a 3-phase current transformer with an output for screw terminals.

6 ND20CT PROGRAMMING

6.1 Frontal panel

Fig. 4: Frontal panel

Description of the frontal panel:

1 – abandon push-button – ESC 2 – push-button to displace to the left 3 – push-button to decrease the value 4 – push-button to increase the value 5 – push-button to displace to the right 6 – acceptance push-button ENTER 7 – symbol of displayed value of averaged active power 8 – display field of mean values, frequency, time, power guard 9 – display field of basic quantities, energy, THD 10 – symbols indicating the display of power factor, power tangent and THD (row 4)	11 – units of displayed values 12 – symbols of digital data transmission 13 – multipliers of basic values 14 – symbols of alarm switching on / occurrence 15 – symbols of THD value display 16 – symbols of energy flow 17 – symbols of min / max quantities 18 – symbols of quantity affiliation to respective phase 19 – symbols of power, energy character 20 – symbol of 3-phase quantity display

6.2 Messages after Switching the Supply on

After switching the supply on, the meter performs the display test and displays the ND20CT meter name, version, serial number and the current program version.

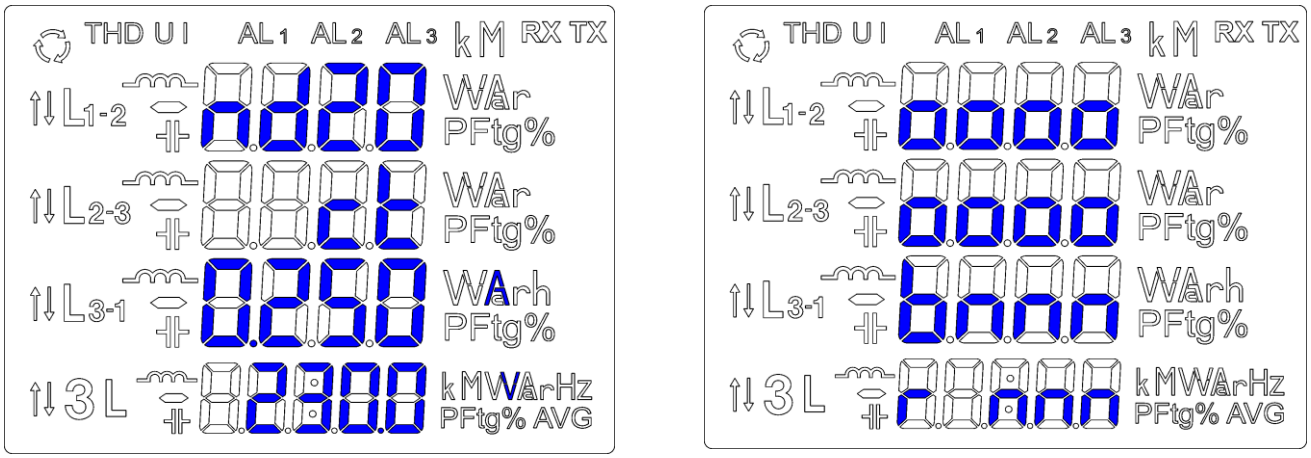

Fig. 5: Messages after starting the meter

where: ooooooo is the serial number, r n.nn is the number of the current program version or the number of the custom-made version, bnnn is the bootloader version number.

Caution! If the display shows the message Err Cal or Err EE, it is necessary to contact the service.

6.3 Monitoring of Parameters

In the measuring mode, quantities are displayed acc. to settled tables Pushing the ◄ push-button (left) or ► push-button (right) causes the transition between displayed quantities. Pushing the ↵ push-button (Enter) causes the transition between mean and additional displayed values. Pushing the ▼ push-button (down) causes the monitoring of the minimum value, however the pressure of the ▲ push-button (up) causes the monitoring of the maximum value. Pushing the ↩ (ESC) push-button during the monitoring of these values, erases minimum or maximum values respectively. Through the RS-485 interface one can set up the values, that would be visualized.

The error display is described in the chapter 8.

When displaying the reactive power, a marker indicating the load character is displayed, capacitive (⫼) or inductive (∼).

Displayed quantities in the field 9 (fig. 5.) for 3-phase 4-wire measurement mode 3Ph/4W and single-phase 1Ph/2W are presented in the table 1a and 1b.

Table 1a

Displayed symbols		L_1,V L_2,V L_3,V	L_{1-2},V L_{2-3},V L_{3-1},V	L_1,A L_2,A L_3,A	L_1,W L_2,W L_3,W	L_1,var L_2,var L_3,var	L_1,VA L_2,VA L_3,VA	L_1,PF L_2,PF L_3,PF	L_1,tg L_2,tg L_3,tg	kWh
Displayed values	row 1	U1	U12 [1]	I1	P1	Q1	S1	PF1	tg1	Imported active energy [2]
	row 2	U2 [1]	U23 [1]	I2 [1]	P2 [1]	Q2 [1]	S2 [1]	PF2 [1]	tg2 [1]	
	row 3	U3 [1]	U31 [1]	I3 [1]	P3 [1]	Q3 [1]	S3 [1]	PF3 [1]	tg3 [1]	
Displaying		optional	optional	optional	optional	optional	optional	optional	optional	optional

Displayed symbols		-, kWh	∿ kvarh	⫴ kvarh	kVAh	L_1,% L_2,% L_3,% , THD U
Displayed values	row 1	Exported active energy [2]	Reactive inductive energy / Reactive positiveenergy [2]	Reactive capacitive energy / Reactive negativeenergy [2]	Apparent energy[2]	THD U1 % [1]
	row 2					THD U2 % [1]
	row 3					THD U3 % [1]
Displaying		optional	optional	optional	optional	optional

Displayed symbols		L_1,% L_2,% L_3,% , THD I	c	W var VA
Displayed values	row 1	THD I1 % [1]	cosineφ1	P_{3phase} [1]
	row 2	THD I2 % [1]	cosine φ2[1]	Q_{3phase} [1]
	row 3	THD I3 % [1]	cosine φ3[1]	S_{3phase} [1]
Displaying		optional	optional	optional

Displayed quantities in the field 8 (fig. 5.) Table 1b

Displayed symbols	3L, A	A	3L, W	3L, var	3L, VA	3L, PF	3L, tg	3L, W_{AVG}
Values displayed in row 4	$I_{mean\ 3phase}$ [1]	$I_{(N)}$ [1]	P_{3phase} [1]	Q_{3phase} [1]	S_{3phase} [1]	$PF_{mean\ 3phase}$ [1]	$Tg_{mean\ 3phase}$ [1]	P_{3phase} (15, 30 or 60 minutes) [2]
Displaying	optional	optional	optional	optional	optional	optional	optional	optional

Displayed symbols	3L, c		Hz	%	3L, THD U	3L, THD I
Values displayed in row 4	cosine (φ) $_{3phase}$ [1]	hour : minutes	frequency	Consumption of ordered power (in 15, 30 or 60 minutes' time) [2]	THD U_{mean} %[1]	THD I_{mean} %[1]
Displaying	optional	optional	optional	optional	optional	optional

In 1Ph/2W measurement mode:
[1] – values are not calculated and not displayed,
[2] – values calculated as corresponding values of first phase,

Displayed quantities in the field 9 (fig. 5.) for 3-phase 3-wire measurement mode 3Ph/3W are presented in the tables 2a and 2b

Table 2a

Displayed symbols		L_{1-2},V L_{2-3},V L_{3-1},V	L_1,A L_2,A L_3,A	kWh	-, kWh	∿ kvarh	⫴ kvarh
Displayed values	row 1	U12	I1	Imported active energy	Exported active energy	Reactive inductive energy / Reactive positive energy	Reactive capacity energy / Reactive negative energy
	row 2	U23	I2				
	row 3	U31	I3				
Displaying		optional	optional	optional	optional	optional	optional

Displayed symbols		kVAh	W var VA
Displayed values	row 1	Apparent energy	P_{3phase}
	row 2		Q_{3phase}
	row 3		S_{3phase}
Displaying		optional	optional

Displayed quantities in the field 8 (fig. 5.) Table 2b

Displayed symbols	3L, A	3L, W	3L, var	3L, VA	3L, PF	3L, tg	3L, W_{AVG}
Values displayed in row 4	$I_{mean\ 3phase}$	P_{3phase}	Q_{3phase}	S_{3phase}	$Pf_{mean\ 3phase}$	$Tg_{mean\ 3phase}$	P_{3phase} (15, 30 or 60 minutes)
Displaying	optional	optional	optional	optional	optional	optional	optional

Displayed symbols	3L, c		Hz	%
Values displayed in row 4	cosine $(\varphi)_{3phase}$	hour : minutes	frequency	Consumption of ordered power (in 15, 30 or 60 minutes)
Displaying	optional	optional	optional	optional

Performing calculation:
Reactive power (configured calculation method):

$$Q=\sqrt{S^2-P^2}$$

or $Q=\sum_{h=1}^{k} U_h I_h \sin(\varphi_h)$, where k – harmonics number (k = 21 for 50 Hz, k =18 for 60 Hz)

Power factor PF $PF=P/S$
Tangent factor: $tg\varphi=Q/P$
Cosine: the cosine of the angle between *U* and *I*

Exceeding of the upper indication range is signaled on the display by upper horizontal lines, and the exceeding of the lower range is signaled by lower horizontal lines. In case of averaged power measurement P_{3phase} single measurements are carried out with a 15 seconds' quantum. Respectively for the selection: 15 min, 30 min, 60 min, 60, 120 or 240 measurements are averaged. After starting the meter or the power erasing, the first value will be calculated after 15 seconds since the meter switching on or erasing. Till the time all active power samples are obtained, the value of averaged power is calculated from already measured samples.
The current in the neutral wire $I_{(N)}$ is calculated from phase current vectors.

The value of consumed ordered power can be used for a previous warning against the exceeding of ordered power and to avoid related fines. The consumption of ordered power is calculated on the base of time interval set for the synchronization of the mean active power and the value of ordered power (Table 3, parameter PAor).

The alarm switching on is signaled by the lighting of the AL1 inscription (in the mode A3non, A3nof, A3_on, A3_of: the inscriptions are AL1, AL2, AL3). The end of alarm duration at the alarm signaling support switched on, is indicated by the pulsation of the AL1 inscription (in the mode A3non, A3nof, A3_on, A3_of: the inscriptions are AL1, AL2, AL3 inscriptions).

6.4 Operating Modes:

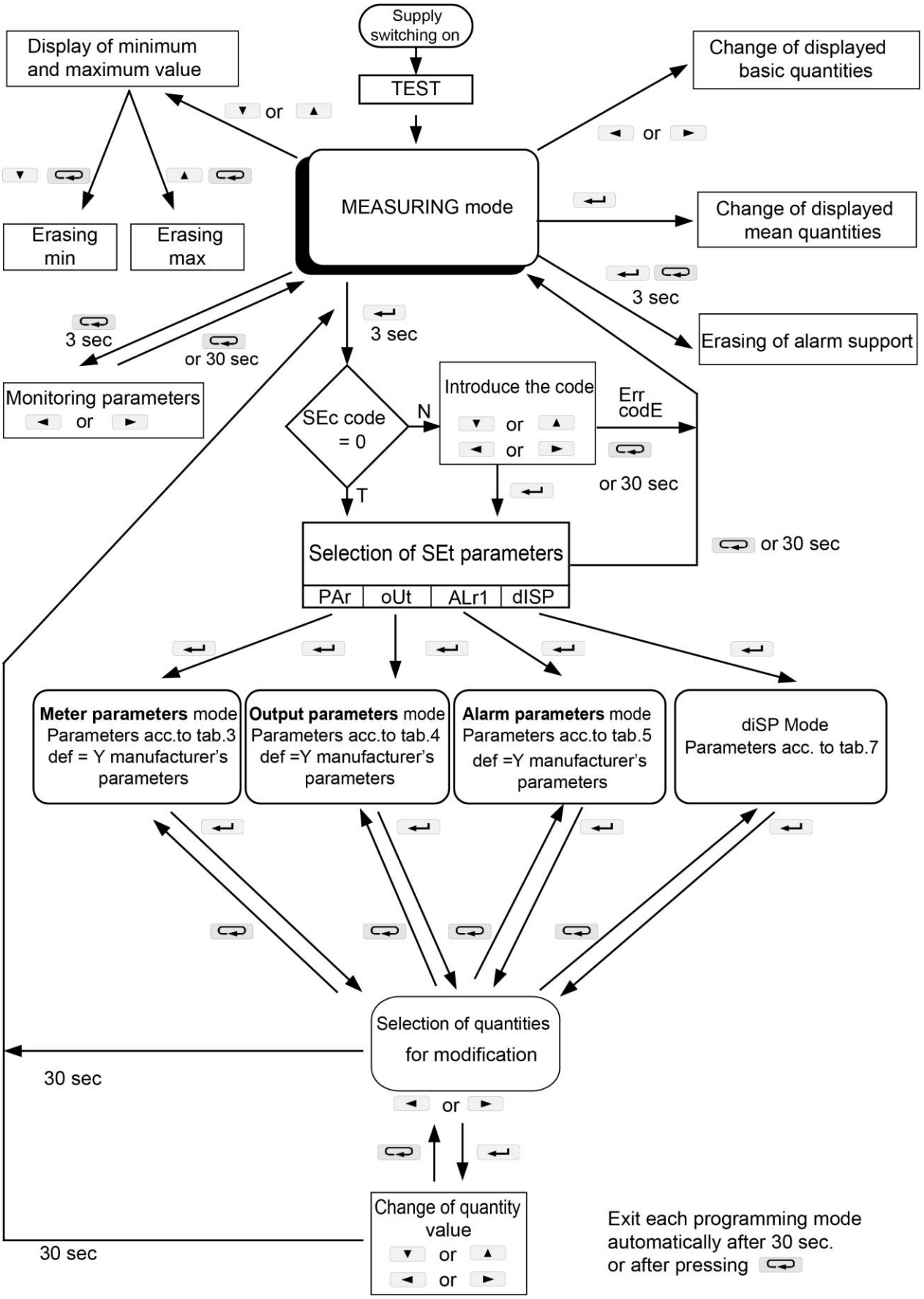

Fig. 6: Operating modes of the ND20CT meter

6.5 Parameter Settings

For the configuration of ND20CT meters, we provide free eCon software available at www.lumel.com.pl.

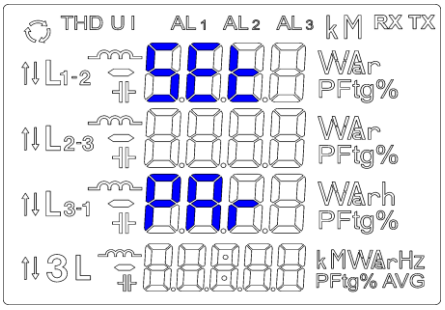

Fig. 7: Setup menu

The entry in the programming mode is carried out through pressing and holding of the ↵ push-button during ca 3 sec. The entry in the programming mode is protected by the access code. If there is not such a code, the program transits into the programming option. The inscription **SET** is displayed (in the first row) and the first group of **PAr** parameters The monitoring of parameters is always available through pressing and holding down the ↩ push-button during ca 3 sec.

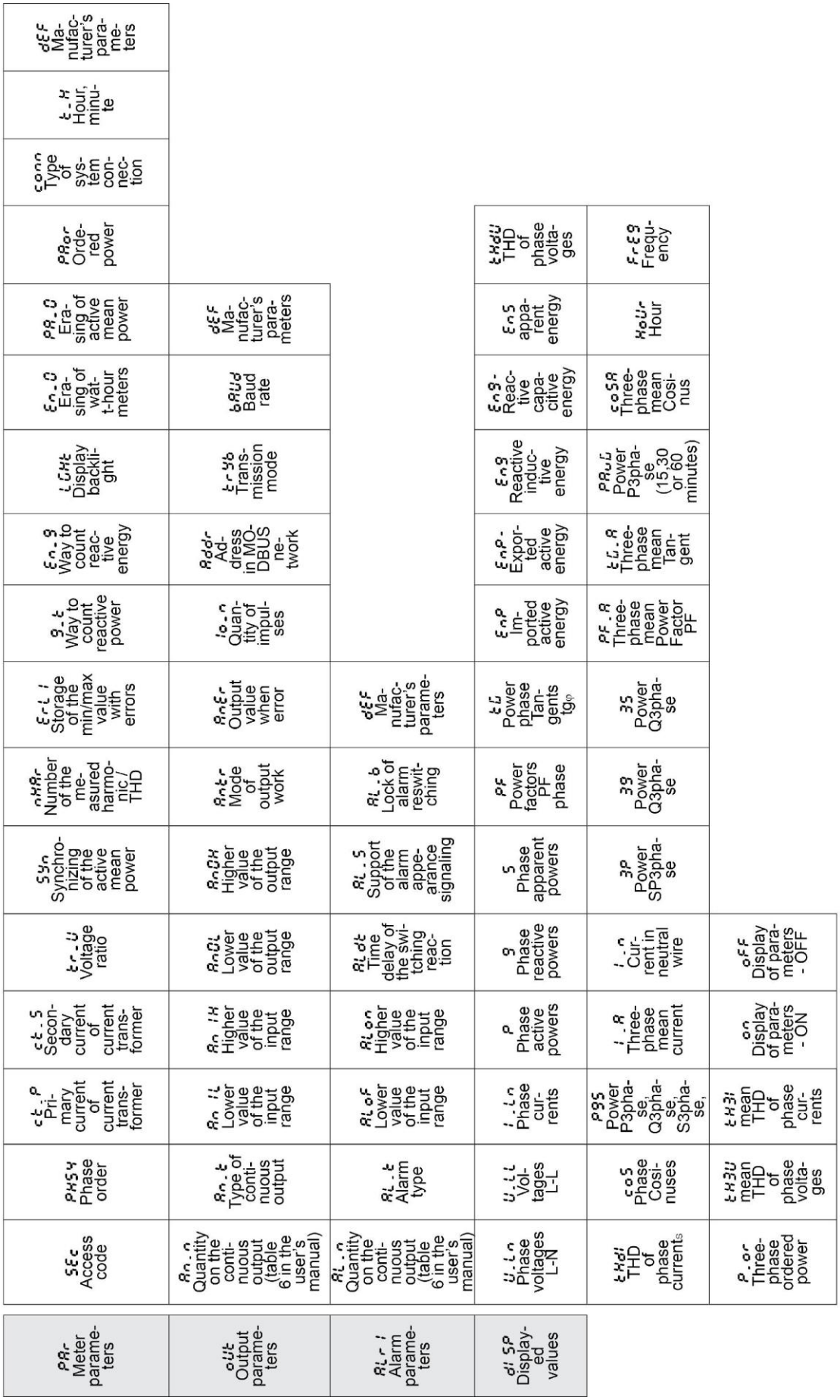

Fig. 8: Programming matrix

6.5.1 Setting of Meter Parameters

Select the PAr mode in options (by ▼ or ▲ push-buttons) and approve the selection by the ↵ push-button.

Table 3

No.	Parameter name	Desi-gnation	Range	Notes / description	Default value
1	Introduction of the access code	SEc	oFF, 0… 60000	0 – without code	0
2	Sequence of phases	PHSQ	0.1	Sequence of phases 0 - 123 1 - 321	0
3	Primary current of current transformer	ct_P	1 … 600.00		0.25
4	Secondary current of current transformer	ct_S	0.1 or 0.25	0 – 0.1 A; 1 – 0.25 A	1
5	Ratio of voltage transformer	tr_U	0.1…4000.0		1
6	Synchronization of mean active power	SYn	15, c_15, c_30, c_60	Synchronization of mean active power: 15 – 15-minute movable window (record synchronized with the clock every 15 minutes) c_15 – measurement synchronized with the clock every 15 minutes, c_30 – measurement synchronized with the clock every 30 minutes, c_60 – measurement synchronized with the clock every 60 minutes,	15
7	Storage of minimum and maximum values with errors	ErLI	oFF, on	oFF – storage of only correct values (from the measuring range), on – storage of also error occurrences in measurements (values in registers 1e20 and -1e20)	on
8	Method to calculate reactive power	q_t	trGLE, SInUS	trGle: $Q=\sqrt{S^2-P^3}$ SInUS: $Q=\sum_{i=1}^{k}\sum_{j=1}^{3}P_i S_j(\mu_{ij})$ k – harmonics number, k = 21 for 50 Hz, k = 18 for 60 Hz	trGLE
9	Method to calculate reactive energy	En_q	cAP, SIGn	cAP – inductive and capacitive energy SIGn – positive and negative energy	cAP
10	Display backlit	LGHt	oFF,1…60, on	off – disabled, on – enabled, 1..60 – time in seconds of backlit support from the push-button pressing.	on
11	Resetting watt-hour meters	En_0	no, EnP, Enq, EnH, ALL	no – lack of actions, EnP – erasing of active energy, Enq – erasing of reactive energy, EnS - erasing of apparent energy. ALL – erasing of all energy	no
12	Erasing of mean active power	PA_0	no, yES	yES – erasing of power	no
13	Ordered power	PAor	0...144.0	Ordered power for forecasting the power consumption in % of the rated value	100.0
14	Measurement mode	conn	3Ph-4, 3Ph-3, 1Ph-2	Meter connection method	3Ph-4
15	Hour, minute	t_H	0…23, 0..59	00,00 (seconds are reset after the setting)	
16	Factory parameters	dEF	no, yES	restoring the group factory parameters	no

The automatic erasing of energy is carried out:

- for active energy when changing: voltage or current ratio;
- for reactive energy when changing: voltage or current ratio, the way of reactive power calculation, reactive energy calculation;

Values are set by means of ▼ and ▲ push-buttons, however the position of the set digit is selected by means of ◄ and ► push-buttons. The active position is indicated by the cursor. The value is approved by the ↵ push-button and rejected by pressing the ↩ push-button. During the acceptance, it is checked if the value is in the range. In the case when the value is set beyond the range, the meter remains in the parameter edition mode, and the value is set to the maximum value (when the value is too high) or to the minimum value (when the value is too low).

6.5.2 Setting of Output Parameters

Select the **out** mode in options and confirm the choice by the ↵ push-button.

Table 4

No.	Parameter name	Desi-gnation	range	Notes / description	Default value
1	Quantity on the continuous output	An_n	table 6	(code acc. to tab.6)	P
2	Type of continuous output	An_t	0_20, 4_20	Selection of 4_20 causes the switching on of the minimum output current limitation on the level ca 3.8 mA.	0_20
3	Lower value of the input range	AnIL	-144.0…144.0	w % of the rated quantity value	0
4	Upper value of the input range	AnIH	-144.0…144.0	w % of the rated quantity value	100.0
5	Lower value of the output range	AnOL	0.00 … 24.00	in mA	0
6	Upper value of the output range	AnOH	0.00 … 24.00	in mA	20.00
7	Output operation mode	Antr	nor, AnOL, AnOH	Operating mode of the continuous output: nor – normal work AnOL – set value AnOL, AnOH - set value AnOH,	nor
8	Output value at error	AnEr	0 … 24	in mA	24
9	Number of impulses	Io_n	15000 … 30000	Number of impulses for kWh	15000
10	Address on Modbus network.	Addr	1…247		1
11	Transmission mode	trYb	r8n2, r8E1, r8o1, r8n1		8n2
12	Baud rate	bAUd	4.8 k, 9.6 k, 19.2 k, 38.4 k		9.6 k
13	Factory parameters	dEF	no, yES	restoring the group factory parameters	no

6.5.3 Setting of Alarm Parameters

Select the **ALr1** mode in options and approve the choice by the ↵ push-button.

Table 5

No.	Parameter name	Desi-gnation	range	Notes / description	Default value
1	Quantity in the alarm output	AL_n	table 6	(code acc. to tab.6)	P
2	Alarm type	AL_t	n-on, n-oFF, on, oFF, H-on, H-oFF, A3non, A3nof, A3_on, A3_of	Fig 9:	n-on
3	Lower value of the input range	ALoF	-144.0…144.0	w % of the rated quantity value	99.0
4	Upper value of the input range	ALon	-144.0…144.0	w % of the rated quantity value	101.0
5	Time delay of the switching reaction	ALdt	0 … 900	in seconds (for quantities AL._n =P_ord. the delay occurs only when alarm is switched on)	0
6	Maintaining the alarm occurrence signaling	AL_S	oFF, on	When the function of maintaining is switched on, after the state of condition is finished, the condition symbol is not blanked, but it begins to flash. Signaling is active until it is switched off by pressing ↩ and ↵ (for 3 sec.). The function only applies to the alarm signaling, thus relay contacts will act without maintaining, according to the selected type of alarm.	oFF
7	Interlocking of a renewed alarm switching on	AL_b	0...900	in seconds	0
8	Factory parameters	dEF	no, yES	restoring the group factory parameters	no

Entering the value ALon lower than ALoF switches the alarm off.

Selection of the value to be monitored:

Table 6

Item/ value in register 4015	Displayed parameter	Type of quantity	Value used for alarm and outputs values percentage conversion (100%)
00	oFF	no quantity /alarm disabled/	none
01	U_1	voltage of L1 phase	Un [V] *
02	I_1	current in phase wire L1	In [A] *
03	P_1	active power of L1 phase	Un x In x cos(0°) [W] *
04	q_1	reactive power of L1 phase	Un x In x sin(90°) [var] *
05	S_1	apparent power of L1 phase	Un x In [VA] *
06	PF1	power factor PF of L1 phase	1
07	tg1	tgφ coefficient of phase L1	1
08	U_2	voltage of L2 phase	Un [V] *
09	I_2	current in phase wire L2	In [A] *
10	P_2	active power of L2 phase	Un x In x cos(0°) [W] *
11	q_2	reactive power of L2 phase	Un x In x sin(90°) [var] *
12	S_2	apparent power of L2 phase	Un x In [VA] *
13	PF2	power factor PF of L2 phase	1
14	tg2	tgφ coefficient of phase L2	1
15	U_3	voltage of L3 phase	Un [V] *

16	I_3	current in outer conductor L3	In [A] *
17	P_3	active power of L3 phase	Un x In x cos(0°) [W] *
18	q_3	reactive power of L3 phase	Un x In x sin(90°) [var] *
19	S_3	apparent power of L3 phase	Un x In [VA] *
20	PF3	power factor PF of L3 phase	1
21	tg3	tgφ coefficient of phase L3	1
22	U_A	average 3-phase voltage	Un [V] *
23	I_A	average three-phase current	In [A] *
24	P	3-phase active power (P1+P2+P3)	3 x Un x In x cos(0°) [W] *
25	q	3-phase reactive power (Q1+Q2+Q3)	3 x Un x In x sin(90°) [var] *
26	S	3-phase apparent power (S1+S2+S3)	3x Un x In [VA] *
27	PF_A	3-phase power factor PF	1
28	tg_A	3-phase tgφ coefficient	1
29	FrEq	frequency	100 [Hz]
30	U12	phase-to-phase voltage L1-L2	$\sqrt{3}$ Un [V] *
31	U23	phase-to-phase voltage L2-L3	$\sqrt{3}$ Un [V] *
32	U31	phase-to-phase voltage L3-L1	$\sqrt{3}$ Un [V] *
33	U4_A	phase-to-phase average voltage	$\sqrt{3}$ Un [V] *
34	P_At	average active power	3 x Un x In x cos(0°) [W] *
35	P_ord	Used percentage of the ordered active power (consumed energy)	100 [%]

*Un, In – rated values of voltages and currents

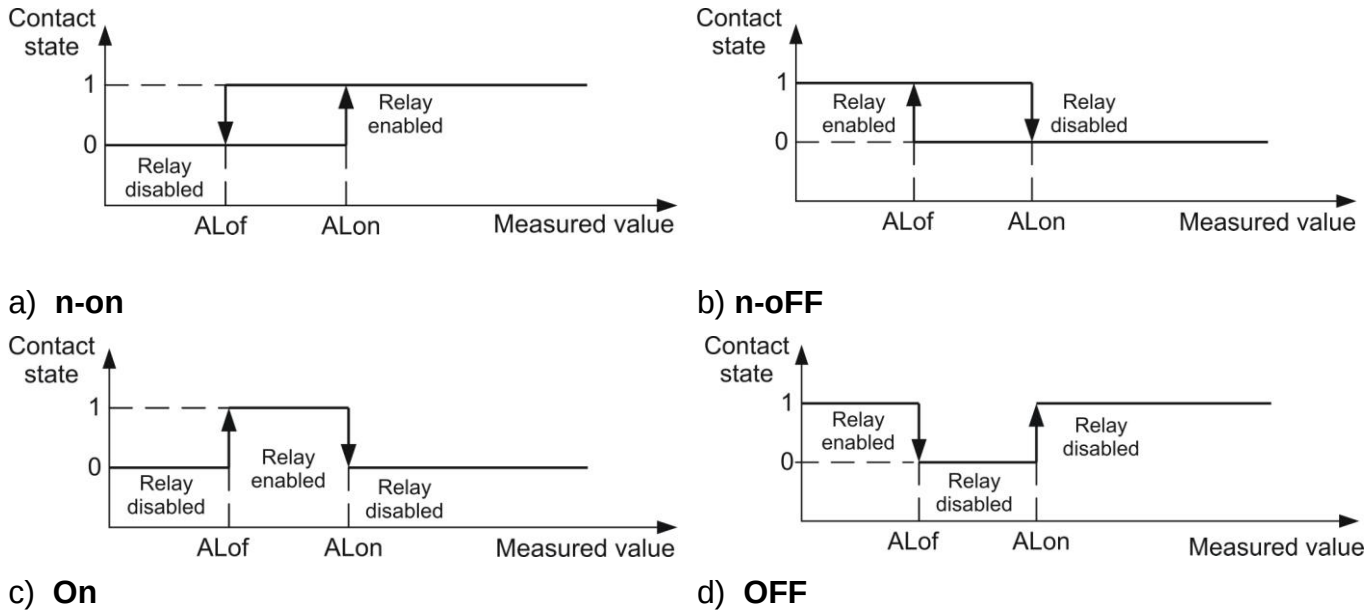

Fig 9. Alarm types: a),b) normal c) disabled d) enabled.

Other alarm types:

– H-on – always enabled;

– H-oFF – always disabled,

– A3non – when alarm type n-on occurs on any phase - the switching relay is switched on and relevant symbol lights up (AL1 – phase 1, AL2 – phase 2, AL3 – phase 3). It will be disabled only when all alarms disappear.

– A3nof – when alarm of n-off type occurs on any phase - the switching relay is switched on and relevant symbol lights up (AL1 – phase 1, AL2 – phase 2, AL3 – phase 3). It will be disabled only when all alarms disappear.

– A3_on – when alarm of on type occurs on any phase - the switching relay is switched on and relevant symbol lights up (AL1 – phase 1, AL2 – phase 2, AL3 – phase 3). It will be disabled only

when all alarms disappear.

– A3_of – when alarm of off type occurs on any phase - the switching relay is switched on and relevant symbol lights up (AL1 – phase 1, AL2 – phase 2, AL3 – phase 3). It will be disabled only when all alarms disappear.

In the A3 alarm series the alarm value must come from the following range: 0-7. They work with the same hysteresis thresholds ALof and AIon for each phase. Alarms signaling maintaining is switched off after pressing the push-buttons and (for 3 sec).

Example 1 **Programming an alarm with hysteresis**

If we want to program the alarm operation in such a way that the alarm is activated at phase 1 current of 150A, and deactivated at the value of 100A, we should do the following:

- initially we must calculate the percentage value of current for alarm thresholds in relation to the nominal current, i.e. if 100% = 200A (for the programmed ratio of 200/0.1A), 100A = 50.0% and 150A = 75.0%
- enter the programming mode and select the level with the **Alr1** symbol
- go to the **Al_n** parameter and set **I_1**
- go to the **Al_t** parameter and select the function marked as **n-on**
- go to the **Al_of** parameter and enter 50.0%
- go to the **Al_on** parameter and enter 75.0%
- exit the programming mode

Example 2: **Programming an alarm active in a set range with a switching delay**

If we want the alarm for the voltage to be activated in the range between 200V - 250V for any of the three phases and to be activated only after 10 seconds we should:

- initially we must calculate the percentage value of voltage for alarm thresholds in relation to the nominal voltage, i.e. if 100% = 230V (the measuring range can be found in table 11), 200V ≈ 86.9% and 250V ≈ 108.6%
- enter the programming mode and select the level with the **Alr1** symbol
- go to the **Al_n** parameter and set **U_1**
- go to the **Al_t** parameter and select the function marked as **A3_of**
- go to the **Al_of** parameter and enter 87%
- go to the **Al_on** parameter and enter 109%
- go to the **ALdt** parameter and enter **10**
- exit the programming mode

If the alarm condition lasts longer than 10 seconds, the meter will activate the alarm relay and the appropriate alarm symbol will be lit on the display (AL1 - phase 1, AL2 - phase 2, AL3 - phase 3). The relay will be switched off only when all alarms disappear and this state continues for more than 10 seconds.

Example 3: **Programming an alarm of earlier warning about the possibility of exceeding the ordered power**

The ordered power is defined as the maximum value of average values of a 3-phase active power over a period of 15 minutes. If we want the alarm to be activated at 90% of the ordered power, and deactivated at 89%, then we should:

- Initially, we must calculate the percentage value of the power ordered in relation to the nominal power, i.e. assuming that the current transformer ratio is 250/0.25A, and the the voltage value is 230V, then the 3-phase nominal active power will be P = 3* 230V*250A = 172.5 kW. Assuming the ordered power as 100kW, it will represent approximately 57.9% of the nominal power
- enter the programming mode and select the level with the **Par** symbol

- go to the **PAor** parameter and enter **57.9**
- go to the **SYn** parameter and set **15** (synchronization with a 15-minute moving window) or **c_15** (clockwise synchronization every 15 minutes); the factory setting is **15**
- go to the level with the **Alr1** symbol
- go to the **Al_n** parameter and set **P_ord**
- go to the **Al_t** parameter and select the function marked as **n-on**
- go to the **Al_of** parameter and enter 89.0%
- go to the **Al_on** parameter and enter 90.0%
- exit the programming mode

Knowing the maximum instantaneous power consumption, you can optimize the alarm switching cycle, which will not result in exceeding of the ordered power. Assuming for the above example that the instantaneous power P_{MAX} = 150kW and knowing that the power synchronization is within 15min (900sec), the delay of alarm switching can be set to the value calculated from the formula
t = (100% -90%)* ((100kW* 900s))/172.5kW) = 60s

Figure 10 shows an example of using the value of the used ordered active power parameter to activate the alarm. The delay time is set to 0 seconds. In the example calculation the devices could work for another 60 seconds for the remaining 10% of the ordered power at the maximum power consumption, without exposing the recipient to penalties. When the delay time is set to 60 seconds, the alarm will not be activated.

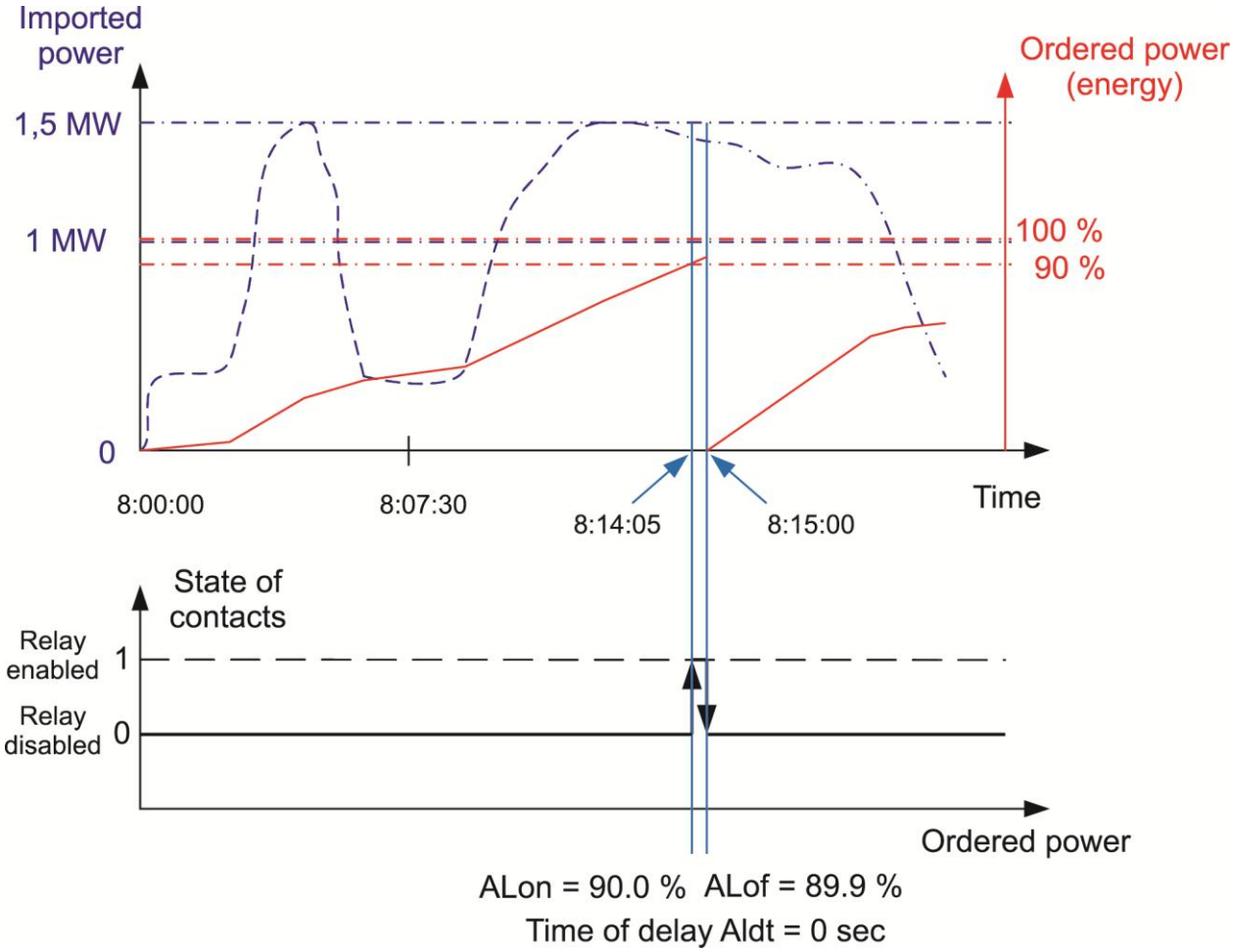

Fig 10. Measurement of utilization of a 15-minute ordered active power synchronized with the clock with an alarm set to 90% consumption

6.5.4 Setting displayed quantities

Select the **dISP** mode in options and approve the choice by the ↵ push-button.

Table 7

No.	Parameter name	Designation	range	Default value
Parameters displayed in rows 1 - 3				
1	Phase voltages	U_Ln	oFF, on	on
2	Phase-to-phase voltages	U_LL	oFF, on	on
3	Phase currents	I_Ln	oFF, on	on
4	Active phase powers	P	oFF, on	on
5	Reactive phase powers	q	oFF, on	on
6	Apparent phase powers	S	oFF, on	on
7	Phase power factors PF	PF	oFF, on	on
8	Phase tgφ coefficients	tG	oFF, on	on
9	Active imported energy	EnP	oFF, on	on
10	Active exported energy	EnP-	oFF, on	on
11	Inductive reactive energy	Enq	oFF, on	on
12	Capacity reactive energy	Enq-	oFF, on	on
13	THD of phase voltage	tHdU	oFF, on	on
14	THD of phase current	tHdI	oFF, on	on
15	Harmonic input active energy	EnH	oFF, on	on
16	Harmonic output active energy	EnH-	oFF, on	on
17	Phase φ Cos	cos	oFF, on	on
18	3-phase active, reactive, apparent power	PqS	oFF, on	on
Parameters displayed in row 4				
19	Average three-phase current	I_A	oFF, on	on
20	Current in neutral wire	I_n	oFF, on	on
21	3-phase active power	3P	oFF, on	on
22	3-phase reactive power	3q	oFF, on	on
23	3-phase apparent power	3S	oFF, on	on
24	3-phase average power factor PF	PF_A	oFF, on	on
25	3-phase average Tangent	tG_A	oFF, on	on
26	3-phase average active power (15,30 or 60 minutes)	PAvG	oFF, on	on
27	3-phase average φ Cosine	coSA	oFF, on	on
28	Hour	HoUr	oFF, on	on
29	Frequency	FrEq	oFF, on	on
30	3-phase ordered power	P_or	oFF, on	on
31	Average THD phase voltages	tH3U	oFF, on	on
32	Average THD phase currents	tH3I	oFF, on	on
33	Turn on display of all parameters	on	no, YES	no
34	Turn off display of all parameters	oFF	no, YES	no

Caution! When you turn off the display of all parameters, the phase current and frequency values are displayed

7 UPDATING SOFTWARE

ND20CT meters have a feature that allows the user to upgrade the software using a PC with eCon software. Free eCon software and update files are available on www.lumel.com.pl. RS485 to USB converter connected to a computer is needed to perform the upgrade, e.g.: PD10 converter.

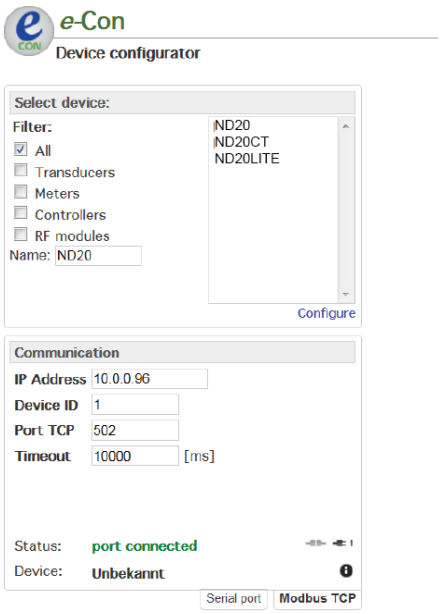

a)

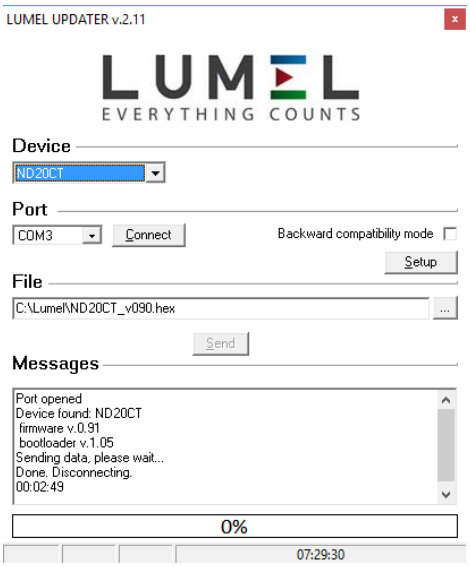

b)

Fig.11 View of program window: a) eCon, b) firmware upgrade

Caution! After upgrading the software, the user should set the factory settings of the meter, thus it is recommended to preserve the initial meter parameters before the upgrade with the use of eCon software.

After starting eCon the serial port, baud rate, mode and the meter address should be set in the settings. Next, select the ND20CT meter from the *Devices* menu and click on the *Readout* icon to read all the parameters set (needed for their later restoration). After selecting the option *Update device firmware* from the *Update* menu, the *Lumel Updater* window (LU) will open - Fig. 11 b. Press *Connect*. *Messages* information window contains info about the progress of the upgrade process. When the port is properly opened the display shows: *Port opened*. There are two ways to enter the upgrade mode: remotely through the LU (based on the settings in eCon - address, mode, baud rate, COM port) and by turning the meter power on when the push-button ⏎ is pressed. The display will show “boot” with bootloader version, and LU program will show the message *Device found* and the name and program version of the connected device. Press the ... button and select the meter update file. When the file is properly opened *File opened* message is displayed. Press the ***Send*** button. After successful upgrade the meter switches to normal operation, the information window shows *Done* and the upgrade duration. After closing the LU window, go to *Restore factory settings* parameter group, select the option and press the *Apply* push-button. Then press the *Record* icon to save the parameters set at the beginning. The current software version can also be checked by reading the greeting messages of the meter after powering up.

Caution! Turning off the power during the software upgrade may result in permanent damage to the meter!

8 RS-485 INTERFACE

The implemented protocol is in accordance with the PI-MBUS-300 Rev G of Modicon Company. The list of serial link parameters of ND20CT meter:

- ID 0xE3
- meter address 1..247
- baud rate 4.8, 9.6, 19.2, 38.4 kbit/s,
- operation mode Modbus RTU,
- information unit 8N2, 8E1, 8O1, 8N1,
- maximum response time when requesting for archive 600 ms.
- maximum number of read registers in one query
  - 41 registers – 4 byte,
  - 82 registers – 2 byte,
- implemented functions 03, 04, 06, 16, 17,
  - 03, 04 registers reading,
  - 06 one register record
  - 16 n - registers record,
  - 17 device identification

Default settings: address 1, baud rate 9.6 kbit/s, RTU 8N2 mode,

Readout of n-registers (code 03h)

Example 1. Readout of 2 16-bit registers of integer type, starting with the register addressed 0FA0h (4000) - registers values 10, 100.

Request:

Device address	Function	Register address		Number of registers		Checksum CRC
		B1	B0	B1	B0	
01	03	0F	A0	00	02	C7 3D

Response:

Device address	Function	Number of bytes	Value from the register 0FA0 (4000)		Value from register 0FA1 (4001)		Checksum CRC
			B1	B0	B1	B0	
01	03	04	00	0A	00	64	E4 6F

Example 2. Readout of 2 32-bit registers of float type as a combination of 2 16-bit registers starting with the register addressed 1B58h (7000) - registers values 10, 100.

Request:

Device address	Function	Register address		Number of registers		Checksum CRC
		B1	B0	B1	B0	
01	03	1B	58	00	04	C3 3E

Response:

Device address	Function	Number of bytes	Value from the register 1B58 (7000)		Value from the register 1B59 (7001)		Value from the register 1B5A (7002)		Value from the register 1B5B (7003)		Checksum CRC
			B3	B2	B1	B0	B3	B2	B1	B0	
01	03	08	41	20	00	00	42	C8	00	00	E4 6F

Example 3. Readout of 2 32-bit registers of float type as a combination of 2 16-bit registers starting with the register addressed 1770h (6000) - registers values 10, 100.

Request:

Device address	Function	Register address		Number of registers		Checksum CRC
		B1	B0	B1	B0	
01	03	17	70	00	04	4066

Response:

Device address	Function	Number of bytes	Value from the register 1770h(6000)		Value from the register 1770h(6000)		Value from the register 1772h(6002)		Value from the register 1772h(6002)		Checksum CRC
			B1	B0	B3	B2	B1	B0	B3	B2	
01	03	08	00	00	41	20	00	00	42	C8	E4 6F

Example 4. Readout of 2 32-bit registers of float type, starting with the register addressed 1D4Ch (7500)

- register values 10, 100.

Request:

Device address	Function	Register address		Number of registers		Checksum CRC
		B1	B0	B1	B0	
01	03	1D	4C	00	02	03 B0

Response:

Device address	Function	Number of bytes	Value from the register 1D4C (7500)				Value from register 1D4D (7501)				Checksum CRC
			B3	B2	B1	B0	B3	B2	B1	B0	
01	03	08	41	20	00	00	42	C8	00	00	E4 6F

Readout of single register (code 06h)

Example 5. Record of 543 (0x021F) value to register 4000 (0x0FA0)

Request:

Device address	Function	Register address		Register value		Checksum CRC
		B1	B0	B1	B0	
01	06	0F	A0	02	1F	CA 54

Response:

Address of the device	Function	Address of the register		Register value		Checksum CRC
		B1	B0	B1	B0	
01	06	0F	A0	02	1F	CA 54

Saving to n-registers (code 10h)

Example 6. Recording 2 registers, starting with the register addressed 0FA3h (4003)

Recording values 20, 2000.

Request:

Address of the device	Function	Address of reg.Hi	Address of reg.Lo	No. of reg. Hi	No. of reg. Lo	Number of bytes	Value for reg. 0FA3 (4003)		Value for reg. 0FA4 (4004)		Checksum CRC
							B1	B0	B1	B0	
01	10	0F	A3	00	02	04	00	14	07	D0	BB 9A

Response:

Device address	Function	Register address		Number of registers		Checksum CRC
		B1	B0	B1	B0	
01	10	0F	A3	00	02	B2 FE

Report identifying the device (code 11h)

Example 7. Device identification

Request:

Device address	Function	Checksum
01	11	C0 2C

Response:

Address	Function	Number of bytes	ID	Device state	Information field for device software version (e.g. "ND20CT-0.91 b-1.05" - ND20CT device with software version 0.90 and bootloader version 1.05)	Checksum (CRC)
01	11	1D	E3	FF	4E 44 32 30 43 54 2D 30 2E 39 31 20 20 20 20 20 20 20 20 62 2D 31 2E 30 35 20	55 00

8.1 MAP OF ND20CT REGISTERS

In ND20CT meter the data is placed in 16- and 32-bit registers. Process variables and parameters of the meter are located in the address space of registers in a manner dependent on the type of the variable. Bits in 16-bit register are numbered from the most recent to the oldest one (b0-b15). 32-bit registers contain floating point numbers in IEEE-754 standard.

Table 8

Address range	Value type	Description
4000 – 4061	Integer (16 bits)	Value placed in one 16-bit register. Description of registers can be found in table 9. Registers for recording and reading.
6000 – 6339	Float (2x16 bits)	Values placed in two successive 16-bit registers. Registers contain the same data as 32-bit registers of 7500 – 7659 range. Read-only registers. Byres order (1-0-3-2)

7000 – 7339	Float (2x16 bits)	Values placed in two successive 16-bit registers. Registers contain the same data as 32-bit registers of 7500 – 7659 range. Read-only registers. Byres order (3-2-1-0)
7500 – 7669	Float (32 bits)	Value placed in one 32-bit register. Description of registers can be found in table 10. Read-only registers.

Table 9

Register address	Ope-rations	Range	Description	Default
4000	RW	0…60000	Protection - password	0
4001	RW	0..1	Sequence of phases 0 - 123 1 - 321	0
4002	RW	1...60000	Nominal value of current on the primary side of current transformer (*100)	100
4003	RW	0.1	Nominal value of current on the secondary side of current transformer 0 – 100 mA, 1 – 250 mA	0
4004	RW	1...40000	Ratio of voltage transformer * 10	10
4005	RW	0..3	Synchronization of mean active power: 0 – 15-minute movable window (record synchronized with the clock every 15 minutes) 1 – measurement synchronized with the clock every 15 minutes, 2 – measurement synchronized with the clock every 30 minutes, 3 – measurement synchronized with the clock every 60 minutes,	0
4006	RW	0...1440 [$^{o}/_{oo}$]	Average ordered power * 10 of nominal signals	1000
4007	RW	0.1	Minimum and maximum values storage method 0 – without errors, 1 – with errors	0
4008	RW	0.1	Method to calculate reactive power: 0 - $Q=\sqrt{S^2-P^2}$ 1 - $Q=\sum_{h=1}^{k} U_h I_h \sin(\varphi_h)$ k – harmonics number, k = 21 for 50 Hz, k = 18 for 60 Hz	0
4009	RW	0.1	Method to calculate reactive energy: 0 – inductive and capacitive energy 1 – positive and negative energy	0
4010	RW	0…61	Display backlit: 0 - off 1-60 – backlit time in seconds from button press, 61 – always on	61
4011	RW	0…4	Resetting energy meters: 0 – no changes, 1- reset active energies, 2 – erase reactive energies, 3 – erase apparent energies, 4 – erase all energies	0
4012	RW	0.1	Erasing of mean active power P_{AV}	0
4013	RW	0.1	Erase min and max	0
4014	RW	0...900 [s]	Interlocking time of the renewed switching on the relay output	0
4015	RW	0.1..35	Quantity on the alarm relay output (code acc. to table 6)	24

4016	RW	0..9	Output type: 0 – n-on, 1– n-oFF, 2 – on, 3 - oFF, 4 – H-on, 5 – H-oFF, 6 - A3non, 7 - A3nof, 8 - A3_on, 9 - A3_of	0
4017	RW	-1440..0..1440 [°/oo]	Lower alarm switching value of the rated input range	990
4018	RW	-1440..0..1440 [°/oo]	Upper alarm switching value of the rated input range	1010
4019	RW	0..900 s	Delay of the alarm switching (for quantity AL_n = P_ord – rgister 4015 =35, the delay occurs only when the alarm is switched on.	0
4020	RW	0.1	Maintaining alarm signaling	0
4021	RW	0.1..35	Quantity on the continuous output no. 1 / code acc. to tab.6 /	24
4022	RW	0.1	Type of continuous output 0 – 0...20 mA; 1 – 4…20 mA	0
4023	RW	-1440..0..1440 [°/oo]	Lower value of the input range in [°/oo] of the rated input range.	0
4024	RW	-1440..0..1440 [°/oo]	Upper value of the input range in [°/oo] of the rated input range.	1000
4025	RW	-2000..0..2000 [10uA]	Lower value of the current output range [10 uA]	0
4026	RW	1..2000 [10 uA]	Upper value of the current output range [10 uA]	2000
4027	RW	0..2	Manual switching of continuous output 1: 0 – normal operation, 1 – value set from register 4025, 2- value set from register 4026	0
4028	RW	0…24 [mA]	Analog output value at error	24
4029	RW	1000…20000	Number of impulses for the impulse output	5000
4030	RW	1..247	Address on Modbus network.	1
4031	RW	0..3	Transmission mode: 0->r8n2, 1->r8E1, 2->r8o1, 3->r8n1	0
4032	RW	0..3	Transmission speed: 0->4800, 1->9600 2->19200, 3->38400	1
4033	RW	0.1	Update the change of transmission parameters	0
4034	RW	0...2359	Hour *100 + Minutes	-
4035	RW	0	reserved	-
4036	RW	0	reserved	-
4037	RW	0.1	Recording standard parameters (with reset of energies and min and max, and averaged power) ,	0
4038	R	0..15258	Active imported energy, two older bytes	0
4039	R	0..65535	Active imported energy, two younger bytes	0
4040	R	0..15258	Active exported energy, two older bytes	0
4041	R	0..65535	Active exported energy, two younger bytes	0
4042	R	0..15258	Reactive inductive energy, two older bytes	
4043	R	0..65535	Reactive inductive energy, two younger bytes	
4044	R	0..15258	Reactive capacitive energy, two older bytes	0
4045	R	0..65535	Reactive capacitive energy, two younger bytes	0
4046	R	0..15258	Apparent energy, two older bytes	0
4047	R	0..65535	Apparent energy, two younger bytes	0
4048	R	0	reserved	0
4049	R	0	reserved	0
4050	R	0..65535	Status register – description below	0
4051	R	0..65535	Serial number, two older bytes	-

4052	R	0..65535	Serial number, two younger bytes	-
4053	R	0..65535	Program version (*100)	-
4054	RW	0..65535	Displayed parameters of standard values	0xFFFF
4055	RW	0..65535	Displayed parameters of average values	0xFFFF
4056	RW	0..65535	Displayed parameters of standard values 2	0xFFFF
4057	RW	0..2	Measurement mode: 0->3Ph / 4W, 1->3Ph / 3W 2-> 1Ph/2W	0
4058	R	0..65535	Nominal voltage x10	577, 2300
4059	R	0..65535	Nominal current x100	100, 500
4060	R	0..65535	reserved	0
4061	R	0..65535	Status register 2– description below	0

In parenthesis [ ], relevant resolution or unit is placed.

Energy is made available in hundreds of watt-hours (var-hours) in double 16-bit register, and for this reason, they must be divided by 10 when calculating values of particular energy from registers, i.e.:

Imported active energy = (register 4038 value x 65536 + register 4039 value) /10 [kWh]
Exported active energy = (register 4040 value x 65536 + register 4041 value) /10 [kWh]
Reactive inductive energy = (register 4042 value x 65536 + register 4043 value) /10 [kVarh]
Reactive capacitive energy = (register 4044 value x 65536 + register 4045 value) /10 [kVarh]
Apparent energy = (register 4016 value x 65536 + register 4047) / 10 [kVAh]

Device status register (address 4050, R):

Bit 15 – “1” – non-volatile memory corruption
Bit 14 – “1” – no calibration or erroneous calibration
Bit 13 – “1” – error of parameter values
Bit 12 – “1” – error of energy values
Bit 11 – “1” – error of phase sequence
Bit 10 – current range “0” – 0.1 A~; 1” – 0.25 A~

Bit 9	Bit 8	voltage range
0	0	57.7 V~
0	1	230 V~

Bit 7 – “1” – the interval of averaged power has not elapsed
Bit 6 – “1” – frequency for THD calculation beyond intervals:
- 48 – 52 for frequency 50 Hz,
- 58 – 62 for frequency 60 Hz

Bit 5 – “1” – voltage too low for frequency measurements
Bit 4 – “1” – too low voltage of phase L3
Bit 3 – “1” – too low voltage of phase L2
Bit 2 – “1” – too low voltage of phase L1
Bit 1 – “1” – reserved
Bit 0 – state of relay output “1” – On, “0” - off

Status Register 2 - nature of reactive power (address 4061, R):

Bit 15 – reserved
Bit 14 - “1” – signaling of alarm occurrence in phase L3 (only for alarm types A3non, A3nof, A3_on, A3_of)
Bit 13 - “1” – signaling of alarm occurrence in phase L2 (only for alarm types A3non, A3nof, A3_on, A3_of)
Bit 12 - “1” – signaling of alarm occurrence in phase L1 (for alarm types n-on, n-off, on, off signals alarm occurrence)
Bit 11 – “1” – capacitive 3L maximum
Bit 10 – “1” – capacitive 3L minimum
Bit 9 – “1” – capacitive 3L
Bit 8 – “1” – capacitive L3 maximum
Bit 7 – “1” – capacitive L3 minimum
Bit 6 – “1” – capacitive L3
Bit 5 – “1” – capacitive L2 maximum
Bit 4 – “1” – capacitive L2 minimum
Bit 3 – “1” – capacitive L2
Bit 2 – “1” – capacitive L1 maximum
Bit 1 – “1” – capacitive L1 minimum
Bit 0 – “1” – capacitive L1

Configuration register of displayed parameters of standard values (address 4054, R/W):

Bit 15 – “1” – displaying cosine φ ϖαλυε
Bit 14 – “1” – displaying current THD
Bit 13 – “1” – displaying voltage THD
Bit 12 – “1” – displaying apparent energy
Bit 11 – “1” – displaying reactive capacitive energy
Bit 10 – “1” – displaying reactive inductive energy
Bit 9 – “1” – displaying active exported energy
Bit 8 – “1” – displaying active imported energy
Bit 7 – “1” – displaying tg
Bit 6 – “1” – displaying PF
Bit 5 – “1” – displaying phase apparent powers
Bit 4 – “1” – displaying phase reactive powers
Bit 3 – “1” – displaying phase active powers
Bit 2 – “1” – displaying phase currents
Bit 1 – “1” – displaying phase-to-phase voltages
Bit 0 – “1” – displaying phase voltages

Configuration register of displayed parameters of standard values 2 (address 4056, R/W):

Bits 15 ... 1 - reserved
Bit 0 – “1” – displaying power ΣP, ΣQ, ΣS

Configuration register of displayed parameters of average values (address 4055, R/W):

Bits 15 ... 14 - reserved
Bit 13 – “1” – displaying average current THD
Bit 12 – “1” – displaying average voltage THD
Bit 11 – “1” – displaying ordered power consumption
Bit 10 – “1” – displaying frequency
Bit 9 – “1” – displaying time
Bit 8 – “1” – displaying average cosine φ
Bit 7 – “1” – displaying averaged active power
Bit 6 – “1” – displaying average tg
Bit 5 – “1” – displaying average PF
Bit 4 – “1” – displaying power ΣS
Bit 3 – “1” – displaying power ΣQ
Bit 2 – “1” – displaying power ΣP
Bit 1 – “1” – displaying current in neutral wire
Bit 0 – “1” – displaying average current

Table 10

Address of 16-bit registers	Address of the register 32 bits	Ope-rations	Description	Unit	3Ph / 4W	3Ph / 3W	1Ph / 2W
6000/7000	7500	R	Voltage of L1 phase	V	√	x	√
6002/7002	7501	R	Current of L1 phase	A	√	√	√
6004/7004	7502	R	Active power of L1 phase	W	√	x	√
6006/7006	7503	R	Reactive power of L1 phase	var	√	x	√
6008/7008	7504	R	Apparent power of L1 phase	VA	√	x	√
6010/7010	7505	R	Power factor PF of L1 phase	-	√	x	√
6012/7012	7506	R	tg□ coefficient of phase L1	-	√	x	√
6014/7014	7507	R	Voltage of L2 phase	V	√	x	x
6016/7016	7508	R	Current of L2 phase	A	√	√	x
6018/7018	7509	R	Active power of L2 phase	W	√	x	x
6020/7020	7510	R	Reactive power of L2 phase	var	√	x	x
6022/7022	7511	R	Apparent power of L2 phase	VA	√	x	x
6024/7024	7512	R	Power factor PF of L2 phase	-	√	x	x
6026/7026	7513	R	tg□ coefficient of phase L2	-	√	x	x
6028/7028	7514	R	Voltage of L3 phase	V	√	x	x
6030/7030	7515	R	Current of L3 phase	A	√	√	x
6032/7032	7516	R	Active power of L3 phase	W	√	x	x
6034/7034	7517	R	Reactive power of L3 phase	var	√	x	x
6036/7036	7518	R	Apparent power of L3 phase	VA	√	x	x
6038/7038	7519	R	Power factor PF of L3 phase	-	√	x	x
6040/7040	7520	R	tg□ coefficient of phase L3	-	√	x	x
6042/7042	7521	R	Average 3-phase voltage	V	√	x	x
6044/7044	7522	R	Average 3-phase current	A	√	√	x

6046/7046	7523	R	3-phase active power (P1+P2+P3)	W	√	√	x
6048/7048	7524	R	3-phase reactive power (Q1+Q2+Q3)	var	√	√	x
6050/7050	7525	R	3-phase apparent power (S1+S2+S3)	VA	√	√	x
6052/7052	7526	R	Power factor (PF) average	-	√	√	x
6054/7054	7527	R	tg□ coefficient average	-	√	√	x
6056/7056	7528	R	Frequency	Hz	√	√	x
6058/7058	7529	R	Phase-to-phase voltage L_{1-2}	V	√	√	x
6060/7060	7530	R	Phase-to-phase voltage L_{2-3}	V	√	√	x
6062/7062	7531	R	Phase-to-phase voltage L_{3-1}	V	√	√	x
6064/7064	7532	R	Average phase-to-phase voltage L1-2	V	√	√	x
6066/7066	7533	R	3-phase active power 15, 30, 60 minutes (P1+P2+P3)	W	√	√	√
6068/7068	7534	R	THD U1	%	√	x	√
6070/7070	7535	R	THD U2	%	√	x	x
6072/7072	7536	R	THD U3	%	√	x	x
6074/7074	7537	R	THD U average	%	√	x	x
6076/7076	7538	R	THD I1	%	√	x	√
6078/7078	7539	R	THD I2	%	√	x	x
6080/7080	7540	R	THD I3	%	√	x	x
6082/7082	7541	R	THD I average	%	√	x	x
6084/7084	7542	R	Cosine of angle between U1 and I1	-	√	x	√
6086/7086	7543	R	Cosine of angle between U2 and I2	-	√	x	x
6088/7088	7544	R	Cosine of angle between U3 and I3	-	√	x	x
6090/7090	7545	R	3-phase cosine average	-	√	√	x
6092/7092	7546	R	Angle between U1 and I1	°	√	x	√
6094/7094	7547	R	Angle between U2 and I2	°	√	x	x
6096/7096	7548	R	Angle between U3 and I3	°	√	x	x
6098/7098	7549	R	Current in neutral wire (calculated from vectors)	A	√	x	x
6100/7100	7550	R	3-phase active imported energy (number of register 7551 overflows, reset after 99999999.9 kWh is reached)	100 MWh	√	√	P1
6102/7102	7551	R	3 –phase active imported energy (counter up to 99999.9 kWh)	kWh	√	√	P1
6104/7104	7552	R	3 –phase Active exported energy (number of register 7553 overflows, reset after 99999999.9 kWh is reached)	100 MWh	√	√	P1
6106/7106	7553	R	3 –phase active exported energy (counter up to 99999.9 kWh)	kWh	√	√	P1
6108/7108	7554	R	3-phase reactive inductive energy (number of register 7555 overflows, reset after 99999999.9 kVarh is reached)	100 Mvarh	√	√	Q1
6110/7110	7555	R	3 –phase reactive inductive energy (counter up to 99999.9 kVArh)	kvarh	√	√	Q1
6112/7112	7556	R	3 –phase reactive capacitive energy (number of register 7557 overflows, reset after 99999999.9 kVarh is reached)	100 Mvarh	√	√	Q1
6114/7114	7557	R	3 –phase reactive capacitive energy (counter up to 99999.9 kVArh)	kvarh	√	√	Q1
6116/7116	7558	R	3 –phase apparent energy (number of register 7559 overflows, reset after 99999999.9 kVAh is reached)	100 MVAh	√	x	x
6120/7118	7559	R	3 –phase apparent energy (counter up to	kVAh	√	x	x

			99999.9 kVAh)				
6120/7120	7560	R	reserved	-	-	-	-
6122/7122	7561	R	reserved	-	-	-	-
6124/7124	7562	R	Time – hours, minutes	-	√	√	√
6126/7126	7563	R	reserved	-	-	-	-
6128/7128	7564	R	reserved	-	-	-	-
6130/7130	7565	R	reserved	-	-	-	-
6132/7132	7566	R	Consumed ordered power	%	√	x	P1
6134/7134	7567	R	reserved	-	-	-	-
6136/7136	7568	R	reserved	-	-	-	-
6138/7138	7569	R	reserved	-	-	-	-
6140/7140	7570	R	Voltage L1 min	V	√	x	√
6142/7142	7571	R	Voltage L1 max	V	√	x	√
6144/7144	7572	R	Voltage L2 min	V	√	x	x
6146/7146	7573	R	Voltage L2 max	V	√	x	x
6148/7148	7574	R	Voltage L3 min	V	√	x	x
6150/7150	7575	R	Voltage L3 max	V	√	x	x
6152/7152	7576	R	Current L1 min	A	√	√	√
6154/7154	7577	R	Current L1 max	A	√	√	√
6156/7156	7578	R	Current L2 min	A	√	√	x
6158/7158	7579	R	Current L2 max	A	√	√	x
6160/7160	7580	R	Current L3 min	A	√	√	x
6162/7162	7581	R	Current L3 max	A	√	√	x
6164/7164	7582	R	Active power L1 min	W	√	x	√
6166/7166	7583	R	Active power L1 max	W	√	x	√
6168/7168	7584	R	Active power L2 min	W	√	x	x
6170/7170	7585	R	Active power L2 max	W	√	x	x
6172/7172	7586	R	Active power L3 min	W	√	x	x
6174/7174	7587	R	Active power L3 max	W	√	x	x
6176/7176	7588	R	Reactive power L1 min	var	√	x	√
6178/7178	7589	R	Reactive power L1 max	var	√	x	√
6180/7180	7590	R	Reactive power L2 min	var	√	x	x
6182/7182	7591	R	Reactive power L2 max	var	√	x	x
6184/7184	7592	R	Reactive power L3 min	var	√	x	x
6186/7186	7593	R	Reactive power L3 max	var	√	x	x
6188/7188	7594	R	Apparent power L1 min	VA	√	x	√
6190/7190	7595	R	Apparent power L1 max	VA	√	x	√
6192/7192	7596	R	Apparent power L2 min	VA	√	x	x
6194/7194	7597	R	Apparent power L2 max	VA	√	x	x
6196/7196	7598	R	Apparent power L3 min	VA	√	x	x
6198/7198	7599	R	Apparent power L3 max	VA	√	x	x
6200/7200	7600	R	Power factor (PF) of L1 phase min	-	√	x	√
6202/7202	7601	R	Power factor (PF) of L1 phase max	-	√	x	√
6204/7204	7602	R	Power factor (PF) of L2 phase min	-	√	x	x
6206/7206	7603	R	Power factor (PF) of L2 phase max	-	√	x	x
6208/7208	7604	R	Power factor (PF) of L3 phase min	-	√	x	x
6210/7210	7605	R	Power factor (PF) of L3 phase max	-	√	x	x
6212/7212	7606	R	tgφ coefficient of phase L1 min	-	√	x	√
6214/7214	7607	R	tgφ coefficient of phase L1 max	-	√	x	√
6216/7216	7608	R	tgφ coefficient of phase L2 min	-	√	x	x
6218/7218	7609	R	tgφ coefficient of phase L2 max	-	√	x	x

6220/7220	7610	R	tgφ coefficient of phase L3 min	-	√	x	x
6222/7222	7611	R	tgφ coefficient of phase L3 max	-	√	x	x
6224/7224	7612	R	Phase-to-phase voltage L_{1-2} min	V	√	√	x
6226/7226	7613	R	Phase-to-phase voltage L_{1-2} max	V	√	√	x
6228/7228	7614	R	Phase-to-phase voltage L_{2-3} min	V	√	√	x
6230/7230	7615	R	Phase-to-phase voltage L_{2-3} max	V	√	√	x
6232/7232	7616	R	Phase-to-phase voltage L_{3-1} min	V	√	√	x
6234/7234	7617	R	Phase-to-phase voltage L_{3-1} max	V	√	√	x
6236/7236	7618	R	Average 3-phase voltage min	V	√	√	x
6238/7238	7619	R	Average 3-phase voltage max	V	√	√	x
6240/7240	7620	R	Average 3-phase current min	A	√	√	x
6242/7242	7621	R	Average 3-phase current max	A	√	√	x
6244/7244	7622	R	3-phase active power min	W	√	√	x
6246/7246	7623	R	3-phase active power max	W	√	√	x
6248/7248	7624	R	3-phase reactive power min	var	√	√	x
6250/7250	7625	R	3-phase reactive power max	var	√	√	x
6252/7252	7626	R	3-phase apparent power min	VA	√	√	x
6254/7254	7627	R	3-phase apparent power max	VA	√	√	x
6256/7256	7628	R	Power factor (PF) average min	-	√	√	x
6258/7258	7629	R	Power factor (PF) average max	-	√	√	x
6260/7260	7630	R	tgφ coefficient average min	-	√	√	x
6262/7262	7631	R	tgφ coefficient average max	-	√	√	x
6264/7264	7632	R	Frequency min	Hz	√	√	√
6266/7266	7633	R	Frequency max	Hz	√	√	√
6268/7268	7634	R	Average phase-to-phase voltage min	V	√	√	x
6270/7270	7635	R	Average phase-to-phase voltage max	V	√	√	x
6272/7272	7636	R	3-phase active power 15, 30, 60 minutes min	W	√	√	√
6274/7274	7637	R	3-phase active power 15, 30, 60 minutes max	W	√	√	√
6276/7276	7638	R	THD U1 min	V / %	√	x	√
6278/7278	7639	R	THD U1 max	V / %	√	x	√
6280/7280	7640	R	THD U2 min	V / %	√	x	x
6282/7282	7641	R	THD U2 max	V / %	√	x	x
6284/7284	7642	R	THD U3 min	V / %	√	x	x
6286/7286	7643	R	THD U3 max	V / %	√	x	x
6288/7288	7644	R	THD U average min	V / %	√	x	x
6290/7290	7645	R	THD U average max	V / %	√	x	x
6292/7292	7646	R	THD I1 min	A / %	√	x	√
6294/7294	7647	R	THD I1 max	A / %	√	x	√
6296/7296	7648	R	THD I2 min	A / %	√	x	x
6298/7298	7649	R	THD I2 max	A / %	√	x	x
6300/7300	7650	R	THD I3 min	A / %	√	x	x
6302/7302	7651	R	THD I3 max	A / %	√	x	x
6304/7304	7652	R	THD I average min	A / %	√	x	x
6306/7306	7653	R	THD I average max	A / %	√	x	x
6308/7308	7654	R	Cosine of angle between U1 and I1 min	-	√	x	√
6310/7310	7655	R	Cosine of angle between U1 and I1 max		√	x	√
6312/7312	7656	R	Cosine of angle between U2 and I2 min	-	√	x	x
6314/7314	7657	R	Cosine of angle between U2 and I2 max	-	√	x	x
6316/7316	7658	R	Cosine of angle between U3 and I3 min	-	√	x	x

6318/7318	7659	R	Cosine of angle between U3 and I3 max	-	√	x	x
6320/7320	7660	R	Average 3-phase cosine min	-	√	√	x
6322/7322	7661	R	Average 3-phase cosine max	-	√	√	x
6324/7324	7662	R	Angle between U1 and I1 min	°	√	x	√
6326/7326	7663	R	Angle between U1 and I1 max	°	√	x	√
6328/7328	7664	R	Angle between U2 and I2 min	°	√	x	x
6330/7330	7665	R	Angle between U2 and I2 max	°	√	x	x
6332/7332	7666	R	Angle between U3 and I3 min	°	√	x	x
6334/7334	7667	R	Angle between U3 and I3 max	°	√	x	x
6336/7336	7668	R	Current in neutral wire min	A	√	x	x
6338/7338	7669	R	Current in neutral wire max	A	√	x	x

In the case of the lower overrun, the value -1e20 is entered, while in the case of upper overrun or error occurrence the value 1e20 is entered.

9 ERROR CODES

During operation of the meter, error messages may appear on the display. The causes of the errors are listed below.

- **Err1 –** when the voltage or current is too small when measuring:
  - PF_i, $tg\varphi_i$, cos, THD below 10% U_n,
  - PF_i, $tg\varphi_i$, cos below 1% I_n,
  - THD below 10% I_n,
  - f below 10% U_n,.
  - $I_{(N)}$, below 10% I_n;
- **bAd Freq** – when measuring harmonics and THD, if the frequency value is beyond the interval 48 – 52 Hz for 50Hz and 58 – 62 for 60 Hz;

Err CAL, Err EE – displayed when the memory of the meter is corrupted. The meter must be sent to the manufacturer.

Err PAr – displayed when the operating parameters of the meter are incorrect. Restore the factory settings (from the menu or via RS-485). The message can be turned off with the button .

- **Err Enrg** – displayed when the energy values in the meter are incorrect. The message can be turned off with the button . Incorrect energy values are reset.
- **Err L3 L2** – error of phase sequence, interchange the connection of phase 2 with phase 3 The message can be turned off with the button . Each time the meter is powered up, the message will be displayed again.
- - - - - or - - - - - – lower overrun. The measured value is lower than the lower measuring quantity range.
- – - - - - or - - - - - **–** upper overrun. The measured value is higher than the upper measuring quantity range.

10 TECHNICAL DATA

Measuring ranges and admissible basic errors Table 11

Measured quantity	Indication range*	Measuring range	L1	L2	L3	∑	Basic error
Current In 0.1 A 0.25A	0.00 .. 999.9 A 0.00 .. 999.9 A	0.0002 .. 0.1200 A 0.0005 .. 0.3000 A	•	•	•		±0,2 % r.
Voltage L-N 57.7 V 230 V	 0.0 .. 280 kV 0.0 .. 1.104 MV	 2.8 .. 70.00 V 11.5 .. 276.0 V	•	•	•		±0,2 % r.
Voltage L-L 100 V 400 V	 0.0 .. 480 kV 0.0 .. 1.92 MV	 5 .. 120 V~ 20 .. 480 V~	•	•	•		±0,5 % r.
Frequency	47.0 .. 63.0 Hz	47.0 .. 63.0 Hz	•	•	•		±0,2 % m.v.
3-phase active power	-9999 MW ..0.00 W .. 9999 MW	-208.0 W ..0.0 W .. 208.0 W	•	•	•	•	±0,5 % r.
3-phase reactive power	-9999 Mvar ..0,00 var .. 9999 Mvar	-208,0 var ..0,0 var .. 208,0 var	•	•	•	•	±0,5 % r.
3-phase apparent power	0.00 VA .. 9999 MVA	0.0 VA .. 208.0 VA	•	•	•	•	±0,5 % r.
Power factor PF	-1 .. 0 .. 1	-1 .. 0 .. 1	•	•	•	•	±1 % r.
tgφ coefficient	-10.2 .. 0 .. 10.2	-10.2 .. 0 .. 10.2	•	•	•	•	±1 % r.
Cosine φ	-1 ... 1	-1 ... 1	•	•	•	•	±1 % r.
φ	-180 ... 180	-180 ... 180	•	•	•		±0,5 % r.
Active imported energy	0 ..99 999 999,9 kWh					•	±0,5 % m.v.
Exported active energy	0 ..99 999 999,9 kWh					•	± 0,5 % m.v.
Reactive inductive energy	0 ..99 999 999,9 kvarh					•	± 0,5 % m.v.
Reactive capacity energy	0 ..99 999 999,9 kvarh					•	± 0,5 % m.v.
Apparent energy	0 ..99 999 999,9 kVAh					•	± 0,5 % m.v.
THD	0…100%	0…100 %	•	•	•		±5 % r.

*Depending on the set tr_U ratio (ratio of the voltage transformer: 0.1 .. 4000.0)
and tr_I ratio (ratio of the current transformer: 1 .. 6000.0)

m.v. - of the range
r - of the measured value
Measurement accuracy (basic error) applies to the meter without external transformers.

Caution! For the correct current measurement the presence of a voltage higher than 0.05 Un is required at least in the relevant phase. At voltage absence – measurement of current from app. 10 % of the rated current value.

Power consumption:

- in supply circuit	≤ 6 VA
- in voltage circuit	≤ 0.05 VA
- in current circuit	≤ 0.05 VA

Display field	dedicated LCD display 3.5”,
Relay output	relay, volt free NO contacts, load capacity 250 V~/ 0.5 A~ (AC1)
Analog output	current 0(4)…20…24 mA load resistance ≤ 250 Ω resolution 0.01 % of the range basic error 0.2%
Serial interface	**RS485:** address 1..247 mode: 8N2, 8E1, 8O1,8N1 baud rate: 4.8, 9.6, 19.2, 38,4 kbit/s transmission protocol: Modbus RTU response time: 600 ms
Energy impulse output	Output of O/C type (NPN), passive of class A acc.to EN 62053-31; supply voltage 18...27V,current 10...27mA
Constant of O/C type output impulse	15000 - 30000 imp./kWh independently of set tr_U, tr_I ratios

Degree of protection provided by housing

from the front side	IP 65
from the terminal side	IP 20

Weight 0.3 kg

Dimensions 96 x 96 x 77 mm

Reference conditions and rated operating conditions.

- supply voltage	85..253 V a.c. (40...400) Hz or 90..300 V d.c. 20..40 V a.c. (40...400) Hz or 20..60 V d.c.
- input signal:	0 .. 0,002..1,2I_n; 0,05..1,2U_n for current, voltage 0 .. 0,002..1,2I_n; 0..0,1..1,2U_n; for factors PF_i ,tgφ_i frequency 47..63 Hz; sinusoidal (THD ≤ 8%)
- power factor	-1...0...1
- ambient temperature	-25..23..+55 °C
- storage temperature	-30..+70 °C
- humidity	25 .. 95 % (no condensation)
- acceptable crest factor :	
- current intensity	2
- voltage	2
- external magnetic field	0..40..400 A/m

- short-term overload (5s)
  - voltage inputs 2 Un
  - current inputs 5 In
- operation position any
- warm-up time 5 min.

Additional errors:

in % of intrinsic error

– due to frequency of input signals < 50%

– due to ambient temperature changes < 50 % / 10 °C

Standards met by the meter

Electromagnetic compatibility

– immunity to interference in accordance with EN 61000-6-2

– noise emission acc. to EN 61000-6-4

Safety requirements:

according to EN 61010-1 standard

- insulation between circuits: basic,
- installation category III,
- degree of pollution 2
- maximum operating voltage relative to earth
  - for supply and measuring circuits: 300 V
  - - for other circuits: 50 V
- altitude < 2000m

11 ORDERING CODES

Ordering code of ND20CT meter of power network parameters. Table 12

METER OF POWER NETWORK PARAMETERS ND20CT-	X	X	X	XX	X	X
Input voltage (phase/phase-to-phase) U_n						
3x 57.7 / 100 V	**1**					
3x 230 / 400 V	**2**					
Analog current output						
no analog output		**0**				
with programmable output 0(4) .. 20 mA		**1**				
Supply voltage						
85..253 V a.c., 90..300 V d.c.			**1**			
20..40 V a.c., 20..60 V d.c.			**2**			
Versions						
standard				**00**		
special*				**XX**		
Language						
Polish					**P**	
English					**E**	
other					**X**	
Acceptance tests:						
without extra requirements						**0**
with quality inspection certificate						**1**
acc. to customer's requirements*						**X**

* the numbering will be determined by the manufacturer,

SAMPLE ORDER: The code **ND20CT-2.1.1.00.P.1** - means a meter with input range of 3x 230/400 V, with programmable analog output 0(4) .. 20 mA, with supply voltage 85 ... 253 V a.c./ 90..300 V d.c. in standard version, Polish language version, with a quality inspection certificate.

12 ACCESSORIES

12.1 LJ series current transformers with RJ12 connector

The offer includes 1 and 3 phase transformers with an RJ12 LJ series connector.
The use of RJ12 connectors makes the connection of the current transformers fast, easy, reliable and eliminates faulty connections.

Technical data:
Maximum working voltage: 720V maximum,
Test voltage / electrical strength /: 3kV 50 Hz for 1 minute,
Frequency: 50/60Hz,
Nominal primary current: 1-phase: 50 .. 250 A; 3 - phase: 60 .. 600 A,
Nominal secondary current: 100mA,
Overload Capability: 1.2 of rated current continuously,
Fire resistance classification: UL94V-O
Distance between conductor rails axes 25mm, 35mm, 45mm
Ambient temperature: -20°C .. +85°C
Accuracy class: 0.5, 1 acc. to EN 61869-2

Standard equipment for 1-phase current transformers:
LJ12 series transformer, with a connecting cable with an RJ12 connector, 1.5 m long
- mounting set for rail mounting,

Standard equipment for 3-phase current transformers:
- LJ25, LJ35 or LJ45 series transformer including a connecting cable with RJ12 connector, 1.5 m long,
- mounting set for rail mounting,

1 - phase current transformers

Designation	Ratio Power /Precision class
LJ12-132235S 000000	50/100mA 0.25VA/1
LJ12-142235S 000000	60/100mA 0.25VA/1
LJ12-182235S 000000	100/100mA 0.25VA/0.5 ,0.35VA/1
LJ12-202235S 000000	125/100mA 0.25VA/0.5 ,0.35VA/1
LJ12-222235S 000000	150/100mA 0.25VA/0.5 ,0.35VA/1
LJ12-232235S 000000	160/100mA 0.25VA/0.5 ,0.35VA/1
LJ12-242235S 000000	200/100mA 0.25VA/0.5 ,0.5VA/1
LJ12-272235S 000000	250/100mA 0.25VA/0.5 ,0.5VA/1

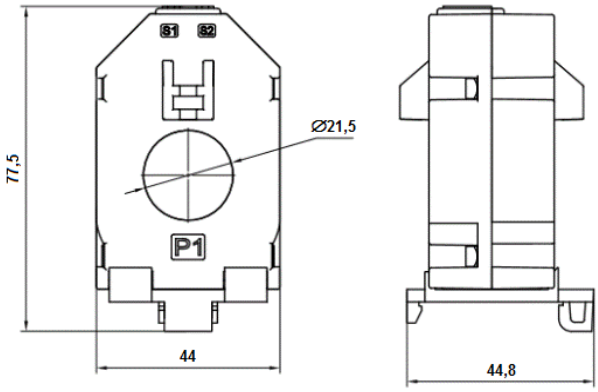

3 - phase current transformers, distance between conductor rails axis 25mm

Designation	Ratio Power /Precision class
LJ25-142231S 000000	60/100mA 0.25VA/1
LJ25-182235S 000000	100/100mA 0.25VA/0.5 ,0.35VA/1
LJ25-202235S 000000	125/100mA 0.25VA/0.5 ,0.35VA/1
LJ25-222235S 000000	150/100mA 0.25VA/0.5 ,0.35VA/1
LJ25-232235S 000000	160/100mA 0.25VA/0.5 ,0.35VA/1
LJ25-242235S 000000	200/100mA 0.25VA/0.5 ,0.35VA/1

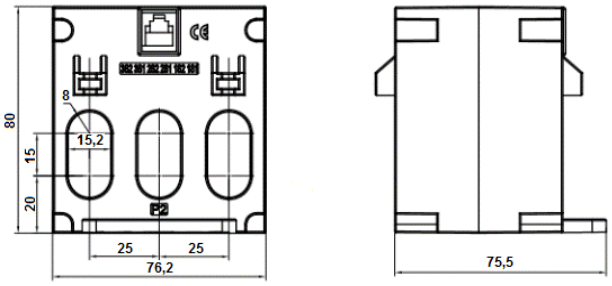

3 - phase current transformers, distance between conductor rails axis 35mm

Designation	Ratio Power /Precision class
LJ35-142231S 000000	60/100mA 0.25VA/1
LJ35-182235S 000000	100/100mA 0.25VA/0.5 ,0.35VA/1
LJ35-202235S 000000	125/100mA 0.25VA/0.5 ,0.35VA/1
LJ35-222235S 000000	150/100mA 0.25VA/0.5 ,0.5VA/1
LJ35-232235S 000000	160/100mA 0.25VA/0.5 ,0.5VA/1
LJ35-242235S 000000	200/100mA 0.25VA/0.5 ,0.5VA/1
LJ35-272235S 000000	250/100mA 0.25VA/0.5 ,0.5VA/1

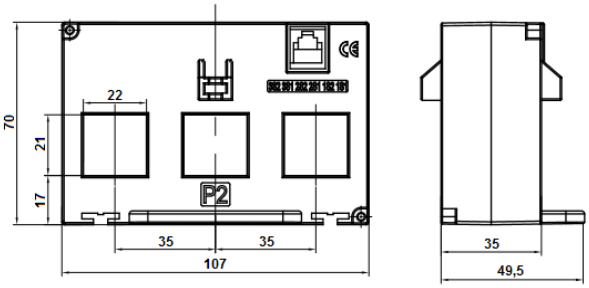

Current transformers 3 - phase, distance between conductor rails axes 45mm

Designation	Ratio Power /Precision class
LJ45-272235S 000000	250/100mA 0.25VA/0.5 ,0.5VA/1
LJ45-312235S 000000	400/100mA 0.25VA/0.5 ,0.5VA/1
LJ45-332235S 000000	600/100mA 0.25VA/0.5 ,0.5VA/1

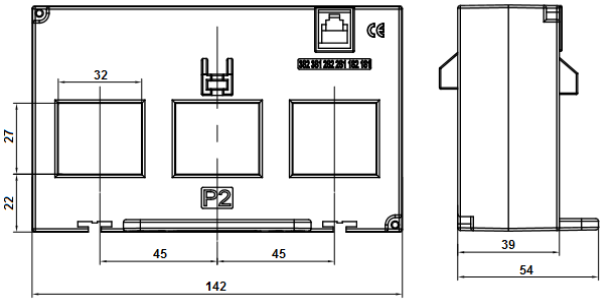

12.2 Current transformers of L3xx series for screw terminal connection

The offer includes 3-phase L3xx transformers for connection to screw terminals.

Technical data:
Nominal primary current In: 63, 125, 250 A~
Nominal secondary current: 250 mA~
Nominal power: 0.1 VA
Maximum working voltage: 720V maximum,
Frequency: 50/60Hz,
Accuracy class: 0.5,
Thermal short-circuit current Ith: 60 x In
Dynamic short circuit current: 2.5 x Ith
Insulation class: E
Degree of protection: IP20
Thermal Class: B
Ambient temperature: -20°C .. +85°C
Storage temperature: -40°C .. +90°C
Fulfilled standards: IEC61869-1/2

Performance characteristics:
- high electrical insulation between the primary and secondary circuit,
- easy and safe electrical connection,
- 550 mm auxiliary conductor length for versions 63 and 125 A ~, 1550 mm for version 250 A ~

L3xx series 3-phase current transformers:

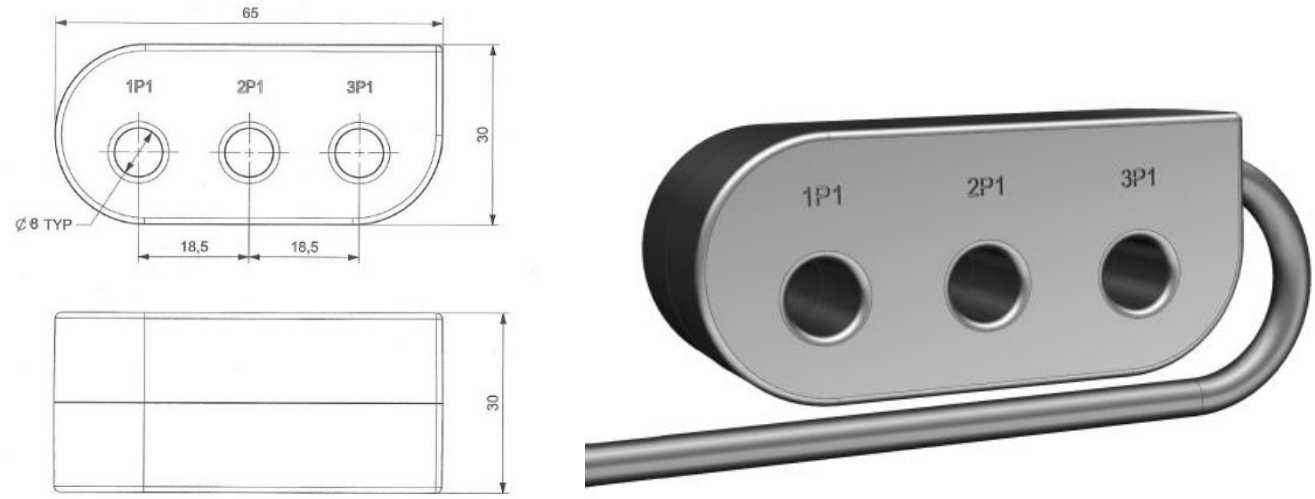

L308: 63A

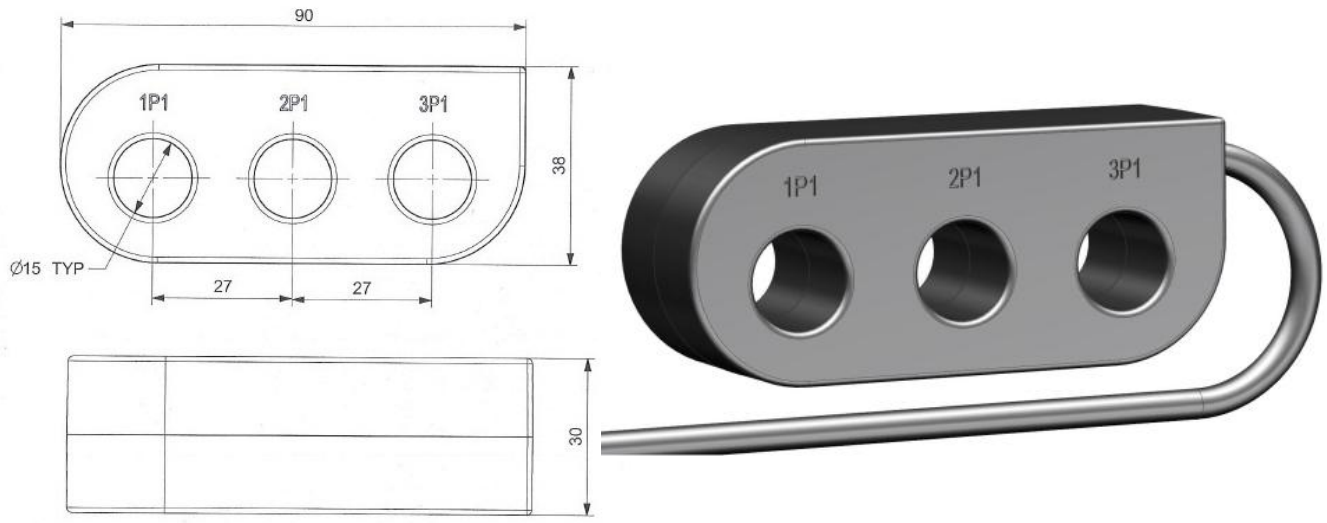

L306: 125A

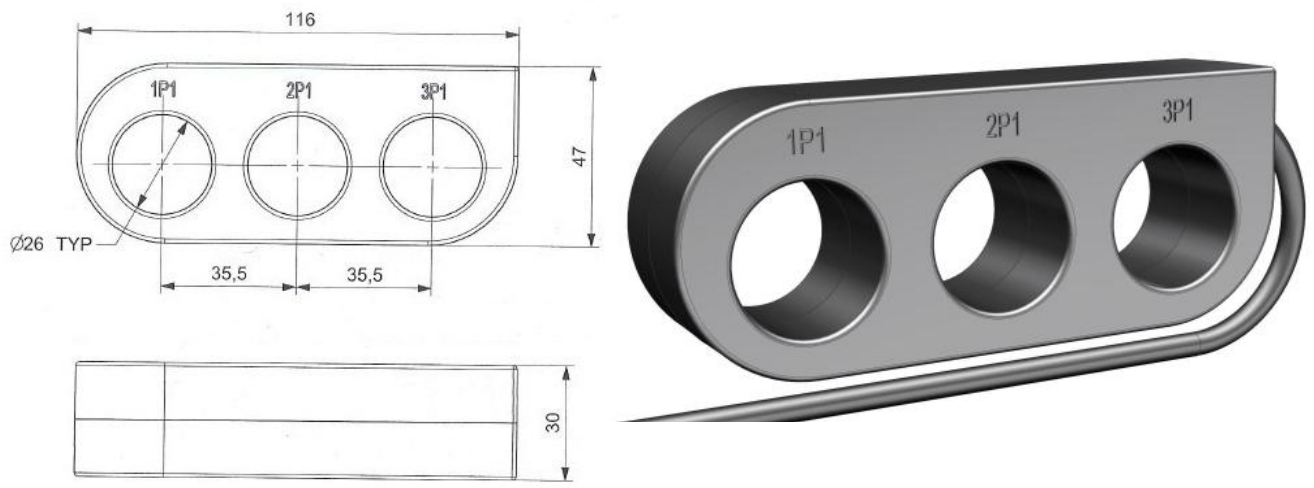

L307: 250A

12.3 Splitter

When using LJ series 1-phase current transformers with RJ12 connector and 100 mA output, connection to the ND20CT meter is recommended to be done via the **ND20CT-303** splitter.

Standard equipment:
- ND20CT-303 splitter,
- connecting cable with RJ12 connector, 1.5m long index 20-810-03-00016 - 1 pc.;

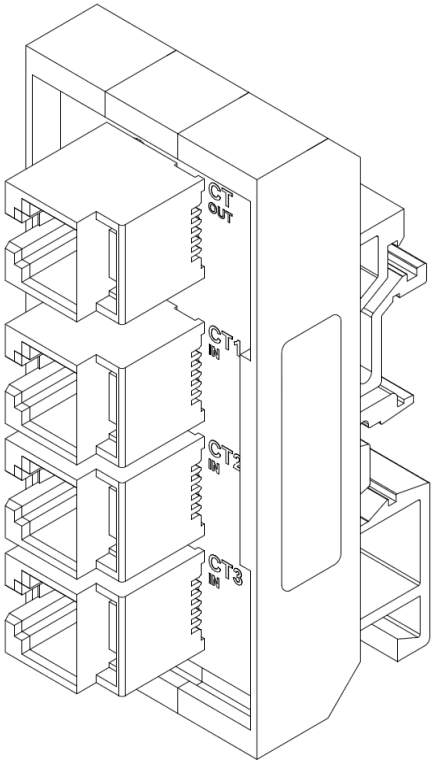

Splitter – ND20CT-303

LUMEL
EVERYTHING COUNTS

LUMEL S.A.
ul. Sulechowska 1, 65-022 Zielona Góra, POLAND
tel.: +48 68 45 75 100, fax +48 68 45 75 508
www.lumel.com.pl

Export department:
tel.: (+48 68) 45 75 139, 45 75 233, 45 75 321, 45 75 386
fax.: (+48 68) 32 54 091
e-mail: export@lumel.com.pl

ND20CT-09A