EUROTEC
TECNOLOGIE IMPIANTISTICHE - AUTOMAZIONE - TELECONTROLLO

LUMEL

POWER NETWORK METER

ND10



USER'S MANUAL

Contents

1. APPLICATION 5
2. METER SET 6
3. BASIC REQUIREMENTS AND OPERATIONAL SAFETY 6
4. INSTALLATION 7
5. METER DESCRIPTION 8
   - 5.1 Current inputs 8
   - 5.2 Voltage inputs 8
   - 5.3 Connection diagrams 9
6. ND10 METER PROGRAMMING 12
   - 6.1 Front panel 12
   - 6.2 Power-on messages 13
   - 6.3 Parameter display 14
   - 6.4 Operating modes 17
   - 6.5 Parameter settings 18
   - 6.5.1 Setting of meter parameters 19
   - 6.5.2 Setting of output parameters 21
   - 6.5.3 Setting of alarm parameters 22
   - 6.5.4 Setting date and time 29
7. SOFTWARE UPGRADES 30
8. RS-485 INTERFACE 32
9. ERROR CODES 46
10. TECHNICAL DATA 48
11. ORDERING CODES 52
12. MAINTENANCE AND GUARANTEE 53

1. APPLICATION

The ND10 meter is a digital programmable panel meter destined for the measurement of the 3-phase, 4-wire power network parameters in balanced and unbalanced systems. It is also capable of displaying measured quantities and their simultaneous digital transmission. The meter is also capable of controlling and optimization of the power electronic devices, systems, and industrial installations. The meter can be used for measuring: RMS value of voltage and current; active, reactive and apparent power; active and reactive energy, power parameters; frequency, 15-, 30- and 60-minute mean active power and THD. Additionally, a current in the neutral wire is calculated from the phase current vectors . Voltage and current values are multiplied by given voltage and current ratios of measuring transformers. Power and energy indications take into account all programmed ratio values. Any and all measured values can be sent to the master via the RS-485 interface. The relay outputs signal alarm when selected parameters exceed set limits. Impulse output can be used for consumption check of the 3-phase real energy. This meter is also able to detect and signal incorrect phase sequence.

The meter is powered by the measuring circuit, i.e. from the voltage output.

There is a galvanic separation between following units of the meter:

- voltage and current inputs,
- RS-485 output,
- pulse output.

2. METER SET

Complete set of the meter includes:

- ND10 Meter	1 pcs.
- user's manual	1 pcs.
- warranty card	1 pcs.
- seal	1 pcs.
- panel mounting bracket	4 pcs.

3. BASIC REQUIREMENTS AND OPERATIONAL SAFETY

In the safety service scope, the transducer meets to requirements of the EN 61010-1 standard.



Observations Concerning the Operational Safety:

- The meter should be installed and connected only by a qualified personnel. All relevant safety measures should be observed during installation.
- Always check the connections before turning the meter on.
- Removal of the meter housing during the warranty period voids the warranty.
- This meter conforms to all requirements of the electromagnetic compatibility in the industrial environment.
- Building power network should include switch or automatic circuit breaker positioned in the convenient vicinity of the meter. It should be properly marked and available to operator at all times.

4. INSTALLATION

ND10 Meter is adapted to be mounted to the panel with mounting brackets (see Fig. 1). Meter housing is made of plastic.

Housing dimensions: 96 x 96 x 77 mm. On the outer side of the meter there are screw and tab terminal strips that can be used for connecting external wires with diameter up to 2.5 mm^2.

Prior to installation a $92.5^{+0.6}$ x $92.5^{+0.6}$ mm slot must be made in the panel. The thickness of the panel material should not exceed 15 mm. The meter must be placed in the panel from the front. During installation the powering voltage must be off. When the panel is inserted in the slot, mount it in place with provided mounting brackets.

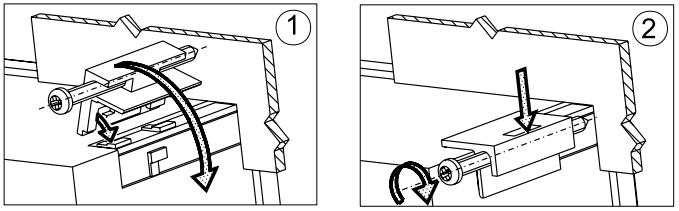

Fig. 1. Meter fitting.

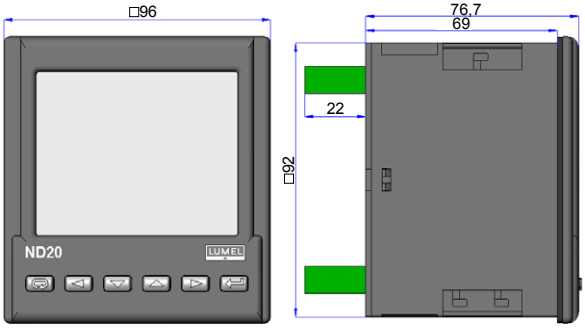

Fig. 2. Meter dimensions.

5. METER DESCRIPTION

5.1. Current inputs

All current inputs are galvanically isolated (internal current transformers). The meter is suited to operate together with external measuring current transformers. Displayed values of currents as well as their derivative values are automatically calculated using set ratio value of the external transformer. Current inputs are specified in the order as either 1 A or 5 A.

5.2 Voltage inputs

Displayed values of voltages as well as their derivative values are automatically calculated using set ratio value of the external transformer. Voltage inputs are specified in the order as either 3 x 57,7/100 V, 3 x 230/400 V or 3 x 290/500 V.

5.3 Connection diagrams

Direct measurement
in a 4-wire network

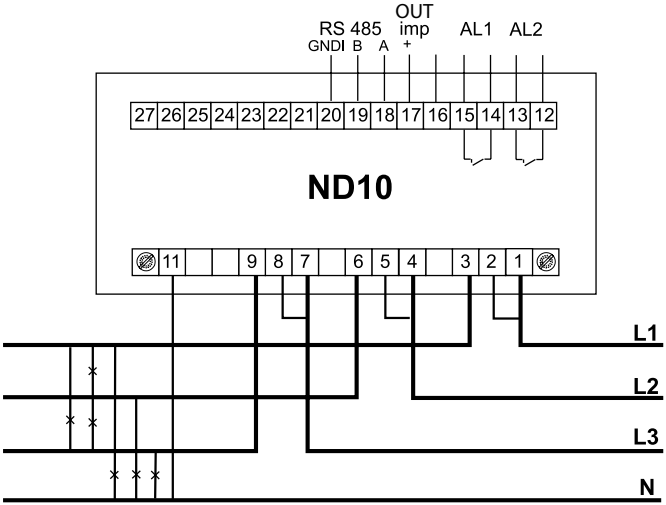

Semi-indirect measurement
in a 4-wire network

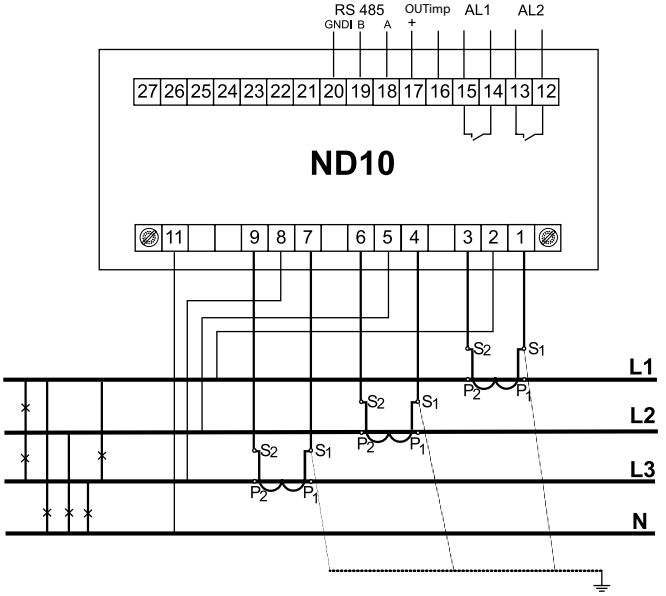

Indirect measurement using
3 current transformers and 3 voltage transformers in 4-wire network

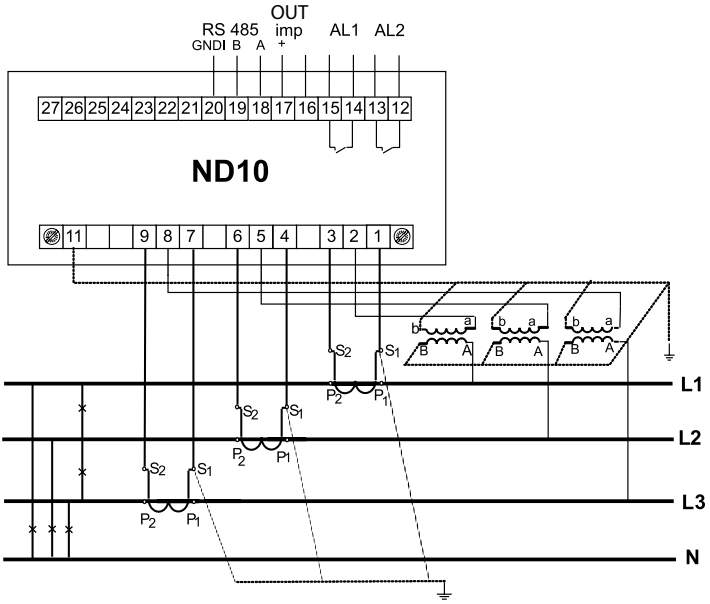

Caution: It is recommended to connect ND10 meters (RS-485) to a computer with a shielded wire. A shield should be connected to ground in a single point. Shielded wire must be used in case there are many interferences in the environment.

Fig 3. Connection diagrams of the meter in the 4-wire network.

6. ND10 METER PROGRAMMING

6.1 Front panel

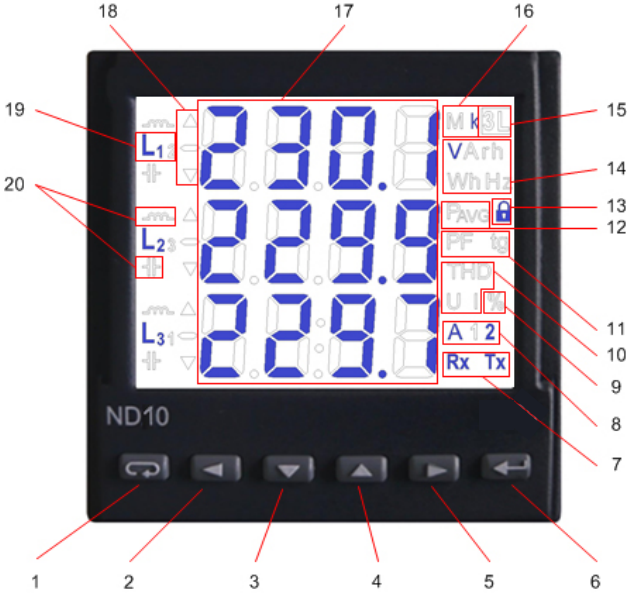

Fig. 4. Front panel.

Front panel description:

1 – cancel button (ESC)
2 – move left button
3 – decrease value button
4 – increase value button
5 – move right button
6 – confirm button (ENTER)
7 – digital data transmission symbols
8 – connection / alarm symbols
9 – unit at displaying THD and power guard
10 – THD value display symbols
11 – power coefficient and power tangent display symbol

12 – mean active power value display symbol
13 – menu safety symbol
14 – units of the displayed values
15 – 3-phase values display symbol
16 – base values ratios
17 – field for displaying base values, power, THD, date, mean values, frequency, time and power guard
18 – min / max value symbols
19 – symbols of value-phase connection
20 – power and energy characteristics symbol

6.2 Power-on messages

After connection of voltage inputs the meter performs a display test and displays the ND10 meter name, build and current software version.

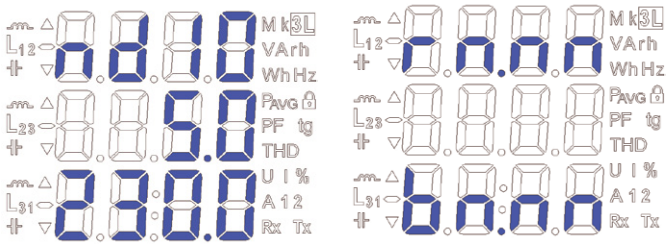

where: r n.nn is a number of the current software version or special build number.
b n.nn is a bootloader version number.

Fig. 5. Meter start messages

Caution! If the display shows Err Cal or Err EE message, please contact the maintenance service.

6.3 Parameter display

In the measurement mode, values are displayed according to set tables. Pressing button ◄ or ► allows user to switch between displayed base values (Table 1). Pressing button ▼ displays minimal value and pressing button ▲ displays maximal value. When these values are displayed, pressing the ↩ button resets all minimal or maximal values. When buttons ▼ and ▲ are pressed simultaneously, respective mean 3-phase values are displayed, together with minimal and maximal values (see Table 2).

RS-485 interface allows setting the values that are to be displayed.

Error display is described in section 8.

When reactive power is displayed, this indication is accompanied by a symbol of the load: capacity load (⊣⊢) or inductive load (∽).

Base values displayed in the field 17 (Fig. 4.). Option (parameter) shown in the Table 1 indicated that displaying of this parameter may be turned off in register 4056 via RS485. Turning this parameter off (from U to tg) disables displaying their respective mean / 3-phase values.

Table 1

Displayed symbols		L_1, V L_2 L_3	$L_{1\text{-}2}$, V $L_{2\text{-}3}$ $L_{3\text{-}1}$	L_1, A L_2 L_3	L_1, W L_2 L_3	L_1, Var L_2 L_3	L_1, VA L_2 L_3	L_1, PF L_2 L_3	L_1, tg L_2 L_3	kWh
Displayed values	row 1	U1	U12	I1	P1	Q1	S1	PF1	tg1	Imported active energy
	row 2	U2	U23	I2	P2	Q2	S2	PF2	tg2	
	row 3	U3	U31	I3	P3	Q3	S3	PF3	tg3	
Display		fixed	optional	fixed		optional				

Displayed symbols		-, kWh	kVarh	kVarh	L_1,THD U L_2, L_3	L_1, THD I L_2, L_3
Displayed values	row 1	Exported active energy	reactive inductive energy / reactive positive energy	reactive capacitive energy / reactive negative energy	THD U1 %	THD I1 %
	row 2				THD U2 %	THD I2 %
	row 3				THD U3 %	THD I3 %
Display		optional				

Displayed symbols		Hz	3L, W P_{AVG}	A	%	Date/Time
Displayed values	row 1	f(L3)	ΩP3-phase (15, 30 or 60 min.)	$I_{(N)}$	Ordered power consumption (within 15, 30 or 60 min.)	Year
	row 2	min	min	min		Month. day
	row 3	max	max	max		Hours: minutes
Display		optional				

Mean values and corresponding minimal and maximal values (when pressed ↵ on the first 8 base value screens, following markers are highlighted: 3L, △,▽) .

Table 2

Displayed symbols		3L, V	3L, V	3L, A	3L, W	3L, Var	3L, VA	3L, PF	3L, tg
Displayed values	row 1	$U_{LNav.}$ 3-phase	$U_{LLav.}$ 3-phase	Iav. 3-phase	P	Q	S	PF	tg
	row 2	min							
	row 3	max							

When upper limit of the indication range is exceeded, it is indicated by two horizontal lines in upper part of the display. Conversely, when lower limit is exceeded, it is indicated by two horizontal lines in the lower part of the display. When mean power is measured $\Sigma P_{3\text{-phase}}$ separate measurements are made for 15-second quantum. Depending on chosen value (15 min, 30 min, 60 min) calculated mean value is based on 60, 120 or 240 measurements. After the meter is turned on or after the power is reset, the first value will be calculated in 15 seconds after turning meter on or resetting. Until all probed values of the active power are acquired, mean power value is calculated from values already measured. Current in the neutral wire I(N) is calculated from phase current vectors.
When alarms are activated, symbols A1 and/or A2 are displayed. When alarms are deactivated and alarm signalization latch is turned on, flashing symbols A1 and/or A2 are displayed.

6.4 Operating modes

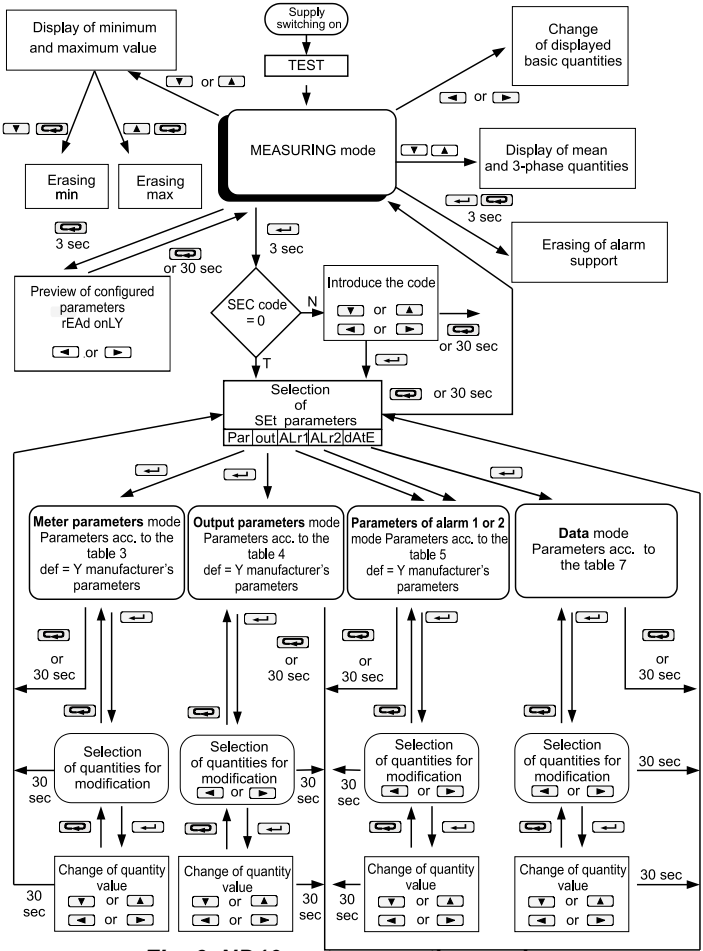

Fig. 6. ND10 meter operating modes.

6.5 Parameter setting

ND10 meters are configured with the use of LPCon software available for free on the www.lumel.com.pl web site.

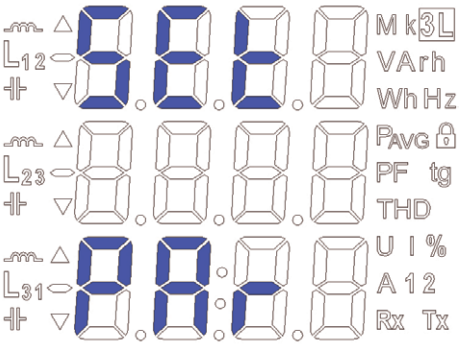

Fig 7. Setup menu.

Programming mode is enabled by pressing and holding ↵ button for about 3 seconds. To enable the programming user bust enter a correct access code. If there is not such a code, the program transits into the programming option. Message **SET** (in the first row) and first parameter group **PAr** are displayed. User can view parameters at any time by pressing and holding ↩ button for about 3 seconds.

6.5.1 Setting of Meter Parameters

In options menu choose **PAr** (using ▼ or ▲ buttons) and confirm selection with the ↵ button.

Table 3

Item	Parameter name	Marking	Range	Notes/ description	Manufacturer's value
1	Access code entry	SEC	oFF, 1 … 60000	0 – no code	0
2	Current transformer ratio	tr_I	1 … 10000		1
3	Voltage transformer ratio	tr_U	0.1 … 4000.0		1
4	Mean active power synchronization	Syn	15, c_15, c_30, c_60	Mean active power synchronization: 15 - 15-minute moving window c_15 – measurement synchr. with clock every 15 min. c_30 – measurement synchr. with clock every 30 min. c_60 – measurement synchr. with clock every 60 min.	15
5	Recording minimal and maximal values complete with errors	erLi	oFF, on	oFF – recording only correct values (within measurement range), on – recording all errors occurring in measurements (values in 1e20 and -1e20 registers)	on

6	Method of reactive energy calculation	En_q	cAP, sIGn	cAP – inductive and capacity energy sIGn – positive and negative energy	cAP
7	Display panel illumination	diSP	oFF,1…60, on	off, on, 1..60 – illumination time (in seconds) from pressing the button	on
8	Energy counters erasing	En_0	no, EnP, Enq, ALL	no – no activity, EnP – erase active energy, Enq – erase reactive, ALL – erase all energies	no
9	Mean active power erasing	PA_0	no, yES	yES – erase power	no
10	Ordered power	PAor	0 … 144.0	Power ordered to establish power consumption in % of rated power	100
11	Default settings	dEf	no, yES	Reverting to default (factory) group settings	no

The automatic erasing of energy is carried out:
- for active energy when changing: voltage or current ratio;
- for reactive energy when changing: voltage or current ratio, reactive energy calculation method;

Buttons [▼] and [▲] are used for setting the values while buttons [◄] and [►] are used for choosing position of the number to be set. The active position is signaled by the cursor. Set value can be accepted by pressing the [↵] button or canceled by pressing the [ESC] button. When value is to be accepted, it is checked against the acceptable value range. If the set value falls outside the allowable range, the meter remains in parameter setting mode and the value is set to the highest possible value (when entered value is too high) or lowest possible value (when it is too low).

6.5.2 Setting of Output Parameters

In Options choose the out mode and confirm your choice by pressing the [↵] button.

Table 4

Item	Parameter name	Marking	Range	Notes/ description	Manufacturer's value
1	Number of impulses	Io_n	5000 … 20000	Number of impulses per kWh	5000
2	MODBUS Network Address	Adr	1 … 247		1
3	Transmission mode	trYb	8n2, 8e1, 8o1, 8n1		8n2
4	Transmission speed	bAUd	4.8 k, 9.6 k, 19.2 k, 38.4 k	reverting to default (factory) group settings	9,6 k
5	Default settings	dEf	no, yES	reverting to default (factory) group settings	no

6.5.3 Setting alarm parameters

In Options choose **ALr1** or **ALr2** mode and confirm your selection by pressing the [↵] button.

Table 5

Item	Parameter name	Marking	Range	Notes/ description	Manufacturer's value
1	Value on alarm output (code as in Tab. 6)	A1_n, A2_n	table 6		P
2	Alarm type	A1_t, A2_t	n-on, n-oFF, on,oFF, H-on, H-oFF	Fig. 8.	n-on
3	Lower value of the input range	A1oF, A2oF	-144.0… 144.0	in % of the rated quantity value	99.0
4	Upper value of the input range	A1on, A2on	-144.0… 144.0	in % of the rated quantity value	101.0
5	Time delay of the switch reaction	A1dt, A2dt	0…900	in seconds (for A1_n = P_ord, delay occurs only when alarm is activated)	0

6	Alarm signalization latch	A1_S, A2_S,	oFF, on	When alarm signalization latch is enabled and the alarm state ends, alarm symbol is not turned off but begins to flash. Alarm symbol flashes until it is turned off by pressing both  and  buttons (for 3 seconds). This function refers only to the alarm signalization, so the relay connectors will operate without support according to the selected alarm type.	
7	Alarm re-activation block	A1_b, A2_b,	0 … 900	in seconds	0
8	Default settings	dEf	no, yES	reverting to default (factory) group settings	no

The write of the value ALon lower than ALoF switches the alarm off.

Selection of the monitored value:

Table 6

Item / value in 4015 register	Displayed element	Quantity type	Value needed for calculations of percentage outputs and alarm values (100 %)
00	oFF	no quantity /alarm disabled/	none
01	U_1	L1 phase voltage	Un [V] *

02	I_1	L1 phase wire current	In [A] *
03	P_1	L1 phase active power	Un x In x cos(0°) [W] *
04	q_1	L1 phase reactive power	Un x In x sin(90°) [var] *
05	S_1	L1 phase apparent power	Un x In [VA] *
06	PF1	L1 phase active power factor	1
07	tg1	tgφ factor of L1 phase	1
08	U_2	L2 phase voltage	Un [V] *
09	I_2	L2 phase wire current	In [A] *
10	P_2	L2 phase active power	Un x In x cos(0°) [W] *
11	q_2	L2 phase reactive power	Un x In x sin(90°) [var] *
12	S_2	L2 phase apparent power	Un x In [VA] *
13	PF2	L2 phase active power factor	1
14	tg2	tgφ factor of L2 phase	1
15	U_3	L3 phase voltage	Un [V] *
16	I_3	L3 phase wire current	In [A] *
17	P_3	L3 phase active power	Un x In x cos(0°) [W] *
18	q_3	L3 phase reactive power	Un x In x sin(90°) [var] *
19	S_3	L3 phase apparent power	Un x In [VA] *
20	PF3	L3 phase active power factor	1
21	tg3	tgφ factor of L3 phase	1

22	U_A	mean 3-phase voltage	Un [V] *
23	I_A	mean 3-phase current	In [A] *
24	P	3-phase active power (P1+P2+P3)	3 x Un x In x cos(0°) [W] *
25	q	3-phase reactive power (Q1+Q2+Q3)	3 x Un x In x sin(90°) [var] *
26	S	3-phase apparent power (S1+S2+S3)	3x Un x In [VA]*
27	PF_A	3-phase active power factor	1
28	tg_A	tgφ factor for 3 phases	1
29	FrEq	frequency	100 [Hz]
30	U12	phase-to-phase voltage L1-L2	Un [V] *
31	U23	phase-to-phase voltage L2-L3	$\sqrt{3}$ Un [V] *
32	U31	phase-to-phase voltage L3-L1	$\sqrt{3}$ Un [V] *
33	U4_A	mean phase-to-phase voltage	$\sqrt{3}$ Un [V] *
34	P_At	mean active power	$\sqrt{3}$ 3 x Un x In x cos(0°) [W]*
35	P_ord	used % of the ordered active power (used energy)	100 [%]
36	I_ne	neutral wire current	In [A] *

*Un, In – voltage and current rated values

a) **n-on**

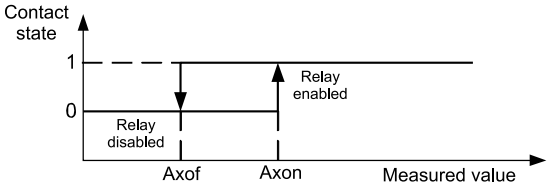

b) **n-oFF**

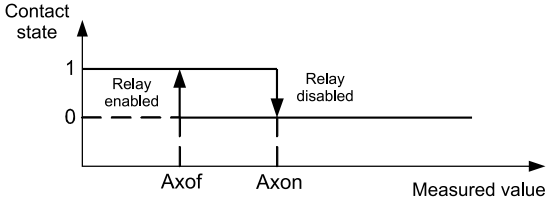

c) **On**

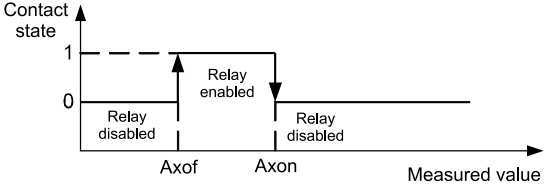

d) **OFF**

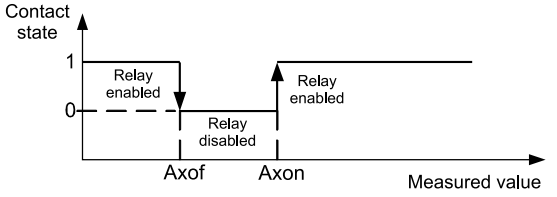

Fig. 8. Alarm types (x – alarm no.): a),b) normal c) off d) on.

Remaining types of the alarm:
H-on – always on;
H-oFF – always off.

Example 1 of alarm setting:
Set **n-on** alarm type for monitored quantity P – 3-phase active power,
Version: 5 A; 3 x 230/400 V. Setting the alarm on after exceeding 3800 W, switching the alarm off after power drops to 3100 W.
Calculations: rated 3-phase active power: P = 3 x 230 V x 5 A = 3450 W

3450 W – 100 %	3450 W – 100 %
3800 W – A1on %	3100 W – A1oF %
In conclusion: A1on = 110,0 %	A1oF = 90,0 %

Set: Monitored quantity: P; type of alarm: n-on, A1on 110,0, A1oF 90,0.

Example no 2 of alarm setting:
The value of ordered power consumption may be used for the purpose of prior warning that ordered power might be exceeded. Ordered power consumption is calculated according to time period set for the mean active power synchronization and value of the ordered power. Pre-emptive alarm should be set so that it indicates the possibility of exceeding ordered power of 1MW at 90 % assuming allocation of 15-minutes (900 s). Measuring current transformer 2500: 5A, voltage 230 V. Peak max power consumption 1,5 MW.
Calculations:
ND10 meter active rated 3-phase power: $P = 3 \times k_U \times U_n \times k_i \times I_n$ = 3 x 1 x 230 V x 500 x 5A = 1,725 MW →100 %.
Ordered-to-rated power ratio = 1 MW / 1.725 ≈ MW **57,97** % of meter rated value (rounded down) - **Pord**;

Alarm operation hysteresis: alarm should be activated at **90** % ordered power (**A1on**), and deactivated for e.g.: at 1 % lower **89** % (**A1of**).

Optimization of power limit function (delay at alarm activation):

alarm activation delay $t_o = 10\% * \left[\frac{1\,MW * 900\,s}{1{,}5\,MW} \right] = 60\,s$ (**A1dt**).

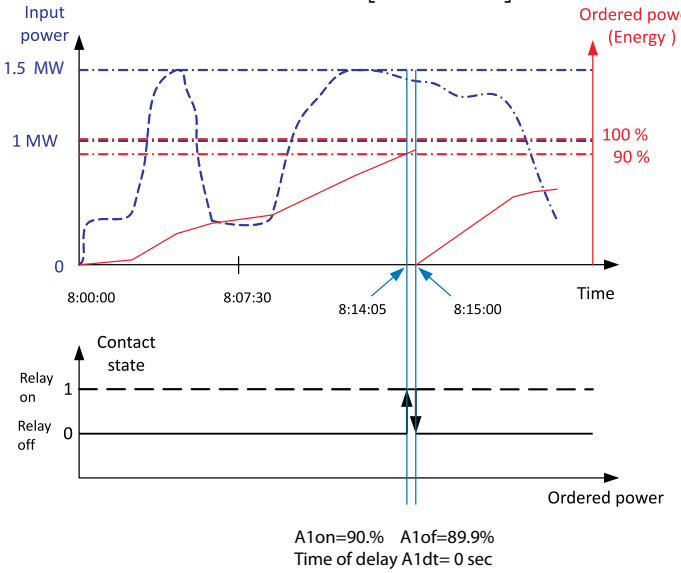

Fig. 9 shows an example of how the consumed ordered active power parameter can be used to alarm activation. Delay time is set at 0 seconds (**A1dt**).

In presented example for the remaining 10 % of ordered power at maximum power consumption, all devices could operate for additional 60 seconds without imposing penalties. If the delay time **A1dt** had been set to 60 seconds, alarm would not have been activated.

Fig. 9. Measurement of used ordered 15 minutes' active power consumption synchronized with the clock, with alarm set on a 90% consumption.

Set alarm as following: monitored quantity: A1_n = P_ord; alarm type: A1_t = n-on; A1on = 90,0, AL1oF = 89,9; delay time A1dt = 0 or 60 s; A1_s = 0; A1_b = 0. Parameters should be set as following: tr_I = 500; Syn = 15 or c_15, and Pord = 57.9.

6.5.4 Setting Date and Time

In Options choose **dAtE** mode and confirm the selection with ↵ button. Seconds are reset to 0 after hour and minute values are set.

Table 7

Item	Parameter name	Marking	Range	Manufacturer's value
1	Hour, minute	t_H	0…23, 0..59	00.00
2	Month, day	t_d	1…12, 1…31	1.01
3	Year	t_y	2001 … 2100	2001

7. SOFTWARE UPGRADE

Function enabling updating of software from the computer of the PC with software eCon was implementation in meter ND10 (with digital output). Free software eCon and update files are accessible on the site www.lumel.com.pl. The connected to the computer converter RS485 is required on USB to the updating, e.g.: the converter PD10.

a)

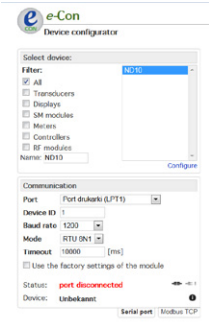

b)

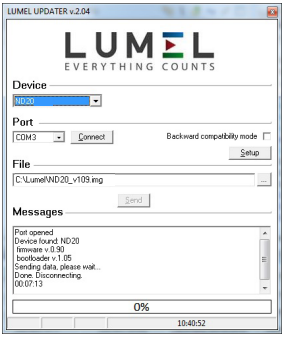

Fig. 10. Program window view: a) eCon, b) software upgrades

Note! After updating the software, the manufacturer's settings of the meter should be set, so it is recommended to save the meter parameters before updating using the software eCon.

After starting eCon's software COM port, baudrate, transmission mode and adress should be set. It can be done in *Options*. Then, ND10 meter should be selected from *Device*. Push icon *Load* to read and save current settings. Open window *Lumel Updater* (LU) – figure 10b from *Updating->Updating of devices firmware*. Push *Connect*. Update progress is shown in *Messages* section. Text *Port opened* appear after correctly opened port. Putting meter in update's mode can be done in two ways: remote from LU (with settings from eCon – port, baudrate, transmission mode and adress) or by turning power on while ↵ button pressed. Meter display shows the „*boot*" inscription with bootloader version, LU shows message „*Device found*" with name and current version of firmware. Using button ... browse to the meter upgrade file. If the file is opened correctly, a *File opened* message is displayed. Press the Send button. When upgrade is successfully completed, meter reverts to the default settings and begins normal operation while the information window displays *Done* message and upgrade elapsed time. Close LU and go to *Restoration of default parameters.* Select checkbox and press *Apply* button. After the LU window is closed, press the *Save* icon to save all initially read parameters. Current firmware version can be checked when meter is power on.

Warning! Turning the meter off during upgrade process may result in permanent damage!

8. RS-485 INTERFACE

Overview of the ND10 serial port parameters.

- identifier 0xCB
- meter address 1..247
- transmission speed 4.8, 9.6, 19.2, 38.4 kbit/s,
- operation mode Modbus RTU,
- transmission mode 8N2, 8E1, 8O1, 8N1,
- max. response time 750 ms.
- max. no. of registers read in a single query
  - 40 4-byte registers,
  - 80 2-byte registers,
- implemented functions
  - 03, 04, 06,16, 17,
  - 03, 04 register read,
  - 06 1st register write,
  - 16 register write,
  - 17 device identification.

Manufacturer's settings: address 1, speed 9.6 kbit/s, mode RTU 8N2.

ND10 meter register map

ND10 meter has data contained in 16-bit and 32-bit registers. Process variables and meter parameters are placed in the address area of registers in a way depended on the variable value type. Bits in 16-bit registers are numbered from the youngest to the oldest (b0-b15). 32-bit registers include numbers of float type in IEEE-754 standard. Sequence of 3210 bytes – the oldest is transmitted as the first.

Table 8

Range of addresses	Type of value	Description
4000 – 4057	Integer (16 bits)	Value set in the 16-bit register. Register description is presented in Table 9. Read and write registers.
6000 – 6319	Float (2x16 bits)	Value is set in the two following 16-bit registers. These registers contain the same data as 32-bit registers from 7500 – 7659 range. Readout registers. Bit sequence (1-0-3-2).
7000 – 7319	Float (2x16 bits)	Value is set in the two following 16-bit registers. These registers contain the same data as 32-bit registers from 7500 – 7659 range. Readout registers. Bit sequence (3-2-1-0).
7500 – 7659	Float (32 bits)	Value set in the 32-bit register. Register description is presented in Table 10. Readout registers.

Table 9

Register address	Operations	Range	Description	Default
4000	RW	0 … 60000	Protection - password	0
4001	RW		Reserved	
4002	RW	0...1200 [‰]	Mean ordered power *10 nominal signals	1000
4003	RW	1 … 10000	Current transformer ratio	1
4004	RW	1 … 40000	Voltage transformer ratio *10	10
4005	RW	0...3	Mean active power synchronization: 0 - 15-minute moving window 1 – measurement synchr. with clock every 15 minutes, 2 – measurement synchr. with clock every 30 minutes, 3 – measurement synchr. with clock every 60 minutes	0
4006	RW		Reserved	
4007	RW	0.1	Max and min value saving method: 0 – no errors, 1 – with errors	0
4008	RW		Reserved	
4009	RW	0.1	Reactive energy calculation method: 0 – inductive and capacity energy 1 – positive and negative energy	0
4010	RW	0 … 61	Display panel illumination: 0 – off, 1-60 – illumination time in seconds from pressing the button; 61 – always on	61
4011	RW	0..3	Energy counters erasing 0 – no changes, 1 – erase active energies, 2 – erase reactive energies, 3 – erase all energies	0
4012	RW	0.1	Erasing of mean active power P_{AV}	0
4013	RW		Reserved	
4014	RW	0.1	Erasing of min. and max.	0

4015	RW	0.1...35	Quantity on the relay output of alarm 1 (code as in Table 6)	24
4016	RW	0..5	Output type 1: 0 – n-on, 1– n-oFF, 2 – on, 3 – oFF, 4 – H-on, 5 – H-oFF	0
4017	RW	-1440...0...1440 [‰]	Lower value of the alarm 1 switch of the rated input range	990
4018	RW	-1440...0...1440 [‰]	Upper value of the alarm 1 switch of the rated input range	1010
4019	RW	0...900 s	Alarm 1 switch delay value (for AL_n = P_ord – register 4015 = 35, delay occurs only at alarm activation)	0
4020	RW	0.1	Alarm 1 signalization latch	0
4021	RW	0...900 s	Alarm 1 re-activation block	0
4022	RW	0.1..35	Quantity on the relay output of alarm 2 (code as in Table 6)	24
4023	RW	0..5	Output type 1: 0 – n-on, 1– n-oFF, 2 – on, 3 – oFF, 4 – H-on, 5 – H-oFF	0
4024	RW	-1440...0...1440 [‰]	Lower value of the alarm 2 switch of the rated input range	990
4025	RW	-1440...0...1440 [‰]	Upper value of the alarm 2 switch of the rated input range	1010
4026	RW	0...900 s	Alarm 2 switch delay value (for AL_n = P_ord – register 4015 = 35, delay occurs only at alarm activation)	0
4027	RW	0.1	Alarm 2 signalization latch	0
4028	RW	0...900 s	Alarm 2 re-activation block	0
4029	RW	5000 … 20000	No. of impulses for the impulse output	5000
4030	RW	1..247	MODBUS Network Address	1
4031	RW	0..3	Transmission mode: 0->8n2, 1->8e1, 2->8o1, 3->8n1	0

4032	RW	0...3	Transmission speed: 0->4800, 1->9600, 2->19200, 3->38400	1
4033	RW	0.1	Upgrade change of transmission parameters	0
4034	RW	0 … 2359	Hour *100 + minutes	0
4035	RW	101 … 1231	Month * 100 + day	101
4036	RW	2009 … 2100	Year	2009
4037	RW	0.1	Standard parameters save (complete with reseting energy as well as min, max and mean power to 0)	0
4038	RW	0..15258	Imported active energy, two older bytes	0
4039	RW	0..65535	Imported active energy, two younger bytes	0
4040	RW	0..15258	Exported active energy, two older bytes	0
4041	RW	0..65535	Exported active energy, two younger bytes	0
4042	RW	0..15258	Reactive inductive energy, two older bytes	
4043	R	0..65535	Reactive inductive energy, two younger bytes	
4044	R	0..15258	Reactive capacity energy, two older bytes	0
4045	R	0..65535	Reactive capacity energy, two younger bytes	0
4046			Reserved	
4047			Reserved	
4048			Reserved	
4049			Reserved	
4050	R	0..65535	Status Register – see description below	0
4051	R	0..65535	Status Register 2 – see description below	0
4052			Reserved	
4053	R	0..65535	Serial number two older bytes	-

4054	R	0..65535	Serial number two younger bytes	-
4055	R	0..65535	Software version (*100)	-
4056	RW	0..65535	Quantity parameters displayed	0xFFFF
4057			Reserved	

Brackets [ ] contain, respectively: resolution or unit.

Energy is made available in hundreds of watt-hours (var-hours) in double 16-bit register, and for this reason, one must divide them by 10 when calculating values of particular energy from registers, e.g.:

Imported active energy = (reg. value 4038 x 65536 + reg. value 4039) / 10 [kWh]

Exported active energy = (reg. value 4040 x 65536 + reg. value 4041) / 10 [kWh]

Exported inductive energy = (reg. value 4042 x 65536 + reg. value 4043) / 10 [kVarh]

Exported capacity energy = (reg. value 4044 x 65536 + reg. value 4045) / 10 [kVarh]

Status Register (address 4050, R):

Bit 15 – „1” – damage of non-volatile memory
Bit 14 – „1” – lack of calibration or invalid calibration
Bit 13 – „1” – error of parameter values
Bit 12 – „1” – error of energy values
Bit 11 – „1” – error of phase sequence
Bit 10 – current range „0” – 1 A ~; „1” – 5 A ~

Bit 9	Bit 8	Voltage range:
0	0	57.8 V ~
0	1	230 V~

Bit 7 – „1” – the interval of power averaging has not elapsed
Bit 6 – „1” – frequency for THD calculation outside ranges:
- 48 – 52 for 50 Hz,
- 58 – 62 for 60 Hz

Bit 5 – „1” – too low voltage to measure the frequency
Bit 4 – „1” – L3 phase voltage too low
Bit 3 – „1” – L2 phase voltage too low
Bit 2 – „1” – L1 phase voltage too low
Bit 1 – „1” – RTC
Bit 0 – „1” – relay output state „1” – on, „0” - off

Status Register 2 – reactive power characteristics (address 4051, R):
Bit 15...12 - reserved
Bit 11 – „1" – capacity 3L max,
Bit 10 – „1" – capacity 3L min.
Bit 9 – „1" – capacity 3L
Bit 8 – „1" – capacity L3 max.
Bit 7 – „1" – capacity L3 min.
Bit 6 – „1" – capacity L3
Bit 5 – „1" – capacity L2 max.
Bit 4 – „1" – capacity L2 min.
Bit 3 – „1" – capacity L2
Bit 2 – „1" – capacity L1 max.
Bit 1 – „1" – capacity L1 min.
Bit 0 – „1" – capacity L1

Configuration register of displayed base quantities parameters (address 4056, R/W):
Bit 15 – „1" – date and time display
Bit 14 – „1" – usage of ordered power display
Bit 13 – „1" – neutral wire current display
Bit 12 – „1" – mean active power display
Bit 11 – „1" – frequency display
Bit 10 – „1" – current THD display
Bit 9 – „1" – voltage THD display
Bit 8 – „1" – reactive inductive energy display
Bit 7 – „1" – reactive capacitive energy display
Bit 6 – „1" – active exported energy display
Bit 5 – „1" – active imported energy display
Bit 4 – „1" – power tangent display
Bit 3 – „1" – power factor display
Bit 2 – „1" – apparent power display
Bit 1 – „1" – reactive power display
Bit 0 – „1" – phase-to-phase volage display

Table 10

Address of 16 bit registers	Address of 32 bit registers	Operations	Description	Unit
6000/7000	7500	R	L1 phase voltage	V
6002/7002	7501	R	L1 phase current	A
6004/7004	7502	R	L1 phase active power	W
6006/7006	7503	R	L1 phase reactive power	var
6008/7008	7504	R	L1 phase apparent power	VA
6010/7010	7505	R	L1 phase power factor (PF)	-
6012/7012	7506	R	L1 phase reactive to active power ratio	-
6014/7014	7507	R	L2 phase voltage	V
6016/7016	7508	R	L2 phase current	A
6018/7018	7509	R	L2 phase active power	W
6020/7020	7510	R	L2 phase reactive power	var
6022/7022	7511	R	L2 phase apparent power	VA
6024/7024	7512	R	L2 phase power factor (PF)	-
6026/7026	7513	R	L2 phase reactive to active power ratio	-
6028/7028	7514	R	L3 phase voltage	V
6030/7030	7515	R	L3 phase current	A
6032/7032	7516	R	L3 phase active power	W
6034/7034	7517	R	L3 phase reactive power	var
6036/7036	7518	R	L3 phase apparent power	VA
6038/7038	7519	R	L3 phase power factor (PF)	-
6040/7040	7520	R	L3 phase reactive to active power ratio	-
6042/7042	7521	R	Mean 3-phase voltage	V
6044/7044	7522	R	Mean 3-phase current	A
6046/7046	7523	R	3-phase active power (P1+P2+P3)	W
6048/7048	7524	R	3-phase reactive power (Q1+Q2+Q3)	var

6050/7050	7525	R	3-phase apparent power (S1+S2+S3)	VA
6052/7052	7526	R	Mean power factor (PF)	-
6054/7054	7527	R	Mean reactive to active power ratio	-
6056/7056	7528	R	Frequency	Hz
6058/7058	7529	R	Phase-to-phase voltage L1-L2	V
6060/7060	7530	R	Phase-to-phase voltage L2-L3	V
6062/7062	7531	R	Phase-to-phase voltage L3-L1	V
6064/7064	7532	R	Mean phase-to-phase voltage	V
6066/7066	7533	R	Active power, 3-phase, 15, 30, 60 minutes (P1+P2+P3)	W
6068/7068	7534	R	THD U1	%
6070/7070	7535	R	THD U2	%
6072/7072	7536	R	THD U3	%
6074/7074	7537	R	THD I1	%
6076/7076	7538	R	THD I2	%
6078/7078	7539	R	THD I3	%
6080/7080	7540	R	Cosine of U1 and I1 angle	-
6082/7082	7541	R	Cosine of U2 and I2 angle	-
6084/7084	7542	R	Cosine of U3 and I3 angle	-
6086/7086	7543	R	Mean 3-phase cosine	-
6088/7088	7544	R	Angle between U1 and I1	°
6090/7090	7545	R	Angle between U2 and I2	°
6092/7092	7546	R	Angle between U3 and I3	°
6094/7094	7547	R	Neutral wire current (calculated from vectors)	A
6096/7096	7548	R	Active 3-phase input energy (no. of register 7549 overflows, resets to 0 after reaching 99999999.9 kWh)	100 MWh
6098/7098	7549	R	Active 3-phase input energy (counter counting up to 99999.9 kWh)	kWh
6100/7100	7550	R	Active 3-phase output energy (no. of register 7551 overflows, resets to 0 after reaching 99999999,9 kWh)	100 MWh
6102/7102	7551	R	Active 3-phase output energy (counter counting up to 99999.9 kWh)	kWh

6104/7104	7552	R	Reactive 3-phase inductive energy (no. of register 7553 overflows, resets to 0 after reaching 99999999,9 kVarh).	100 Mvarh
6106/7106	7553	R	Reactive 3-phase inductive energy (counter counting up to 99999.9 kVarh)	kvarh
6108/7108	7554	R	Reactive 3-phase capacity energy (no. of register 7555 overflows, resets to 0 after reaching 99999999,9 kVarh)	100 Mvarh
6110/7110	7555	R	Reactive 3-phase capacity energy (counter counting up to 99999.9 kVarh)	kvarh
6112/7112	7556	R	Reserved	
6114/7114	7557	R	Reserved	
6116/7116	7558	R	Reserved	
6118/7118	7559	R	Reserved	
6120/7120	7560	R	Time – hours, minutes	-
6122/7122	7561	R	Time – month, day	-
6124/7124	7562	R	Time - year	-
6126/7126	7563	R	Usage of ordered power	%
6128/7128	7564	R	Voltage L1 min	V
6130/7130	7565	R	Voltage L1 max	V
6132/7132	7566	R	Voltage L2 min	V
6134/7134	7567	R	Voltage L2 max	V
6136/7136	7568	R	Voltage L3 min	V
6138/7138	7569	R	Voltage L3 max	V
6140/7140	7570	R	Current L1 min	A
6142/7142	7571	R	Current L1 max	A
6144/7144	7572	R	Current L2 min	A
6146/7146	7573	R	Current L2 max	A
6148/7148	7574	R	Current L3 min	A
6150/7150	7575	R	Current L3 max	A
6152/7152	7576	R	Active power L1 min	W
6154/7154	7577	R	Active power L1 max	W

6156/7156	7578	R	Active power L2 min	W
6158/7158	7579	R	Active power L2 max	W
6160/7160	7580	R	Active power L3 min	W
6162/7162	7581	R	Active power L3 max	W
6164/7164	7582	R	Reactive power L1 min	var
6166/7166	7583	R	Reactive power L1 max	var
6168/7168	7584	R	Reactive power L2 min	var
6170/7170	7585	R	Reactive power L2 max	var
6172/7172	7586	R	Reactive power L3 min	var
6174/7174	7587	R	Reactive power L3 max	var
6176/7176	7588	R	Apparent power L1 min	VA
6178/7178	7589	R	Apparent power L1 max	VA
6180/7180	7590	R	Apparent power L2 min	VA
6182/7182	7591	R	Apparent power L2 max	VA
6184/7184	7592	R	Apparent power L3 min	VA
6186/7186	7593	R	Apparent power L3 max	VA
6188/7188	7594	R	Power factor (PF) L1 min	-
6190/7190	7595	R	Power factor (PF) L1 max	-
6192/7192	7596	R	Power factor (PF) L2 min	-
6192/7194	7697	R	Power factor (PF) L2 max	-
6196/7196	7698	R	Power factor (PF) L3 min	-
6198/7198	7699	R	Power factor (PF) L3 max	-
6200/7200	7600	R	Reactive to active power ratio L1 min	-
6202/7202	7601	R	Reactive to active power ratio L1 max	-
6204/7204	7602	R	Reactive to active power ratio L2 min	-
6206/7206	7603	R	Reactive to active power ratio L2 max	-
6208/7208	7604	R	Reactive to active power ratio L3 min	-
6210/7210	7605	R	Reactive to active power ratio L3 max	-
6212/7212	7606	R	Phase-to-phase voltage L1-2 min	V
6214/7214	7607	R	Phase-to-phase voltage L1-2 max	V
6216/7216	7608	R	Phase-to-phase voltage L2-3 min	V
6218/7218	7609	R	Phase-to-phase voltage L2-3 max	V
6220/7220	7610	R	Phase-to-phase voltage L3-1 min	V

6222/7222	7611	R	Phase-to-phase voltage L3-1 max	V
6224/7224	7612	R	Mean 3-phase voltage (min)	V
6226/7226	7613	R	Mean 3-phase voltage (max)	V
6228/7228	7614	R	Mean 3-phase current (min)	A
6230/7230	7615	R	Mean 3-phase current (max)	A
6232/7232	7616	R	3-phase active power (min)	W
6234/7234	7617	R	3-phase active power (max)	W
6236/7236	7618	R	3-phase reactive power (min)	var
6238/7238	7619	R	3-phase reactive power (max)	var
6240/7240	7620	R	3-phase apparent power (min)	VA
6242/7242	7621	R	3-phase apparent power (max)	VA
6244/7244	7622	R	Power factor (PF) min	-
6246/7246	7623	R	Power factor (PF) max	-
6248/7248	7624	R	Reactive to active power ratio (3-phase mean min.)	-
6250/7250	7625	R	Reactive to active power ratio (3-phase mean max.)	-
6252/7252	7626	R	Frequency min	Hz
6254/7254	7627	R	Frequency max	Hz
6256/7256	7628	R	Mean phase-to-phase voltage (min.)	V
6258/7258	7629	R	Mean phase-to-phase voltage (max.)	V
6260/7260	7630	R	Active power, 3-phase, 15, 30, 60 minutes (min.)	W
6262/7262	7631	R	Active power, 3-phase, 15, 30, 60 minutes (max.)	W
6264/7264	7632	R	harmonic U1 / THD U1 min	V/%
6266/7266	7633	R	harmonic U1 / THD U1 max	V/%
6268/7268	7634	R	harmonic U2 / THD U2 min	V/%
6270/7270	7635	R	harmonic U2 / THD U2 max	V/%
6272/7272	7636	R	harmonic U3 / THD U3 min	V/%
6274/7274	7637	R	harmonic U3 / THD U3 max	V/%
6276/7276	7638	R	harmonic I1 / THD I1 min	A/%
6278/7278	7639	R	harmonic I1 / THD I1 max	A/%
6280/7280	7640	R	harmonic I2 / THD I2 min	A/%
6282/7282	7641	R	harmonic I2 / THD I2 max	A/%
6284/7284	7642	R	harmonic I3 / THD I3 min	A/%
6286/7286	7643	R	harmonic I3 / THD I3 max	A/%

6288/7288	7644	R	Cos of U1 and I1 angle (min.)	-
6290/7290	7645	R	Cos of U1 and I1 angle (max.)	-
6292/7292	7646	R	Cos of U2 and I2 angle (min.)	-
6294/7294	7647	R	Cos of U2 and I2 angle (max.)	-
6296/7296	7648	R	Cos of U3 and I3 angle (min.)	-
6298/7298	7649	R	Cos of U3 and I3 angle (max.)	-
6300/7300	7650	R	Mean 3-phase cos (min.)	-
6302/7302	7651	R	Mean 3-phase cos (max.)	-
6304/7304	7652	R	U1 and I1 angle (min.)	º
6306/7306	7653	R	U1 and I1 angle (max.)	º
6308/7308	7654	R	U2 and I2 angle (min.)	º
6310/7310	7655	R	U2 and I2 angle (max.)	º
6312/7312	7656	R	U3 and I3 angle (min.)	º
6314/7314	7657	R	U3 and I3 angle (max.)	º
6316/7316	7658	R	Neutral wire current (min.)	A
6318/7318	7659	R	Neutral wire current (max.)	A

When lower limit is exceeded, a -1e20 value is displayed. Conversely, when upper limit is exceeded, a 1e20 value is displayed.

9. ERROR CODES

During the meter operation, error messages may be displayed. Following list shows causes of particular errors.

- **Err1** – too low voltage or current during measurement:
  - PF_i, $tg\varphi_i$, cos, THD less than 10% Un,
  - PF_i, $tg\varphi_i$, cos less than 1% In,
  - THD less than 10% In,
  - f less than 10% Un,
  - $I_{(N)}$ less than 10% In;

- **bAd Freq** – during THD measurement, when frequency value is outside 48 – 52 Hz range for 50Hz and outside 58 – 62 Hz range for 60 Hz;

- **Err bat** – internal RTC battery. The measurement is carried out after switching the supply on and every day at midnight. Then the message may be turned off by pressing the button. Then the message will be inactive until the meter is turned off and on again;

- **Err CAL, Err EE** – meter memory damaged. In such case meter should be sent back to the manufacturer.

- **Err PAr** – incorrect operational parameters of the meter. In such case meter should be set to default (factory) settings (from menu or via RS-485 interface). Message can be disabled by pressing button.

- **Err Enrg** – incorrect energy parameters. Message can be disabled by pressing button. Incorrect energy values are set to 0.

- **Err L3 L2** – phase sequence error. Switch phase 2 and phase 3 connections. Message may be disabled by pressing the button. Then the message will be inactive until the meter is turned off and on again;

- **----** – lower limit exceeded. Measured value is lower that the lower measuring limit for a given quantity.

- **----** – upper limit exceeded. Measured value is higher that the upper measuring limit for a given quantity or measurement error occurred.

10. TECHNICAL DATA

Measuring Ranges and Admissible Basic Errors

Table 11

Measured value	Indication range*	Measuring range	L1	L2	L3	Σ	Basic error
Current In 1 A 5 A	0,00 ... 1.5 kA 0,00 ... 60 kA	0,005 ... 1,200 A~ 0,025 ... 6.000 A~	•	•	•		±0.2% rng
Voltage L-N 57.7 V 230 V 290 V	0,0 ... 230.8 kV 0,0 ... 1.012 MV 0,0 ... 1.200 MV	49 ... 64 V~ 195 ... 253 V~ 246 ... 300 V~	•	•	•		±0.2% m.q.
Voltage L-L 100 V 400 V 500 V	0.0 ... 440 kV 0.0 ... 1.752 MV 0.0 ... 2.000 MV	85 ... 110 V~ 340 ... 440 V~ 425 ... 520 V~	•	•	•		±0.5% m.q.
Frequency	47.0 ... 63.0 Hz	47,0 ... 63.0 Hz	•	•	•		±0.2% m.q.
Active power	-9999 MW ...0,00 W ... 9999 MW	-1,52 kW ...1,0 W ... 1,52 kW	•	•	•	•	±0.5% rng
Reactive power	-9999 Mvar ...0,00 var ... 9999 Mvar	-1,52 kvar ...1,0 var ... 1,52 kvar	•	•	•	•	±0.5% rng
Apparent power	0,00 VA ... 9999 MVA	1,0 VA ... 1,52 kVA	•	•	•	•	±0.5% rng
Power factor PF	-1 ... 0 ... 1	-1 ... 0 ... 1	•	•	•	•	±1% rng
Tangent φ	-1.2 ... 0 ... 1.2	-1,2 ... 0 ... 1.2	•	•	•	•	±1% rng
Cosinus φ	-1 ... 1	-1 ... 1	•	•	•	•	±1% rng
φ	-180 ... 180	-180 ... 180	•	•	•		±0.5% rng
Imported active energy	0 ...99 999 999.9 kWh					•	±0.5% rng
Exported active energy	0 ...99 999 999.9 kWh					•	±0.5% rng
Reactive inductive energy	0...99 999 999,9 kVarh					•	±0.5% rng
Reactive capacitive energy	0...99 999 999,9 kVarh					•	±0.5% rng
THD	0...100%	0...100%	•	•	•		±5% rng

*Depending on the setting of tr_U (voltage transformer ratio: 0.1 ... 4000.0
and tr_I (current transformer ratio: 1 ... 10000)

m.q. - error in relation to measured quantity

rng - error relevant to range value

Caution! Correct measurement requires L3 phase voltage higher than 0.85 Un.

Power consumption:

- in L1 and L2 voltage circuit	≤ 0.05 VA
- in L3 voltage circuit	≤ 3 VA
- in current circuits	≤ 0.05 VA

Display dedicated 3.5” LCD display,

Relay outputs 2 relays, volt-free NO contacts
current capacity 250 V~/ 0,5 A~ (a.c.)

Serial interface RS485: address 1..247
mode: 8N2, 8E1, 8O1,8N1
baud rate: 4.8, 9.6, 19.2, 38,4 kbit/s
transmission protocol: Modbus RTU
response time: 750 ms

Energy impulse output OC (NPN) output, class A passive, compliant with EN 62053-31;
supply voltage 18...27 V,
current 10...27mA

Pulsing constant of OC output 5000 - 20000 pulses/kWh
independently of set tr_U, tr_I ratios

Protection grade of the casing

from the front	IP 65
from behind the panel	IP 20

Weight 0.3 kg

Dimensions 96 x 96 x 77 mm

Reference and rated operating conditions

- supply voltage /in L3 phase measurement circuit/:
  50 .. 64 V a.c. or 195 .. 253 V a.c. or 246 .. 300 V a.c.
  47 ...63 Hz
- input signal: 0...0.005...1,2I_n for current;
  0.85..1,1U_n for voltage;
  0...0.01...1.2I_n; 0..0.85..1.1U_n;
  for factors PF_i ,$tg\varphi_i$
  frequency 47...63 Hz;
  sinusoidal (THD ≤ 8%)
- power factor -1...0...1
- ambient working temperature -20...23...+55 °C
- storage temperature -30...+70 °C
- humidity 25 ... 95 % (no condensation)

- max peak factor:
  - current 2
  - voltage 2
- external magnetic field 0...40...400 A/m

- short-term overload (5 s)
  voltage inputs 2 Un
  current inputs 10 In
- working position any
- warm-up time 5 min.

Real time clock battery: CR2032

Additional errors:
in % of the base error
- from input signal frequency < 50%
- from ambient temperature changes < 50 % / 10°C
- for THD > 8% < 100 %

ND10 meter complies with following standards:

Electromagnetic compatibility:
- interference immunity acc. to EN 61000-6-2
- interference emission acc. to EN 61000-6-4

Safety requirements: acc. to EN 61010-1
- circuit-to-circuit insulation: basic,
- installation category III,
- pollution level 2,
- max working voltage in reference to ground:
  - for power and measurement circuits: 300 V
  - for remaining circuits: 50 V
- altitude a.s.l. < 2000 m.

11. ORDERING CODES

Table 12

ND10	X	X	X	XX	X	X
Current input In:						
1 A (X/1)	1					
5 A (X/5)	2					
Voltage input (phase/phase-to-phase) Un:						
3 x 57.7/100 V		1				
3 x 230/400 V		2				
3x 290 / 500 V		3				
Digital input:						
with RS485 interface			1			
Version:						
standard				00		
custom-made*				XX		
Language:						
Polish					P	
English					E	
other					X	
Acceptance tests:						
with an extra quality inspection certificate						1
acc. to customer's requirements*						X

* after agreeing with the manufacturer

Example of Order:

The code: **ND10 221100E1** means:

ND10 – meter of network parameters of ND10 type

2 – current input In: 5 A (X/5),

2 – input voltage (phase/phase-to-phase) Un = 3 x 230/400 V,

1 – digital input - RS485 interface

00 – standard version,

E – language: english

1 – with an extra quality inspection certificate.

LUMEL
EVERYTHING COUNTS

LUMEL S.A.
ul. Sulechowska 1, 65-022 Zielona Góra, POLAND
tel.: +48 68 45 75 100, fax +48 68 45 75 508
www.lumel.com.pl

Export department:
tel.: (+48 68) 45 75 139, 45 75 233, 45 75 321, 45 75 386
fax.: (+48 68) 32 54 091
e-mail: export@lumel.com.pl

ND10-09A