ND10 METER OF NETWORK PARAMETERS



- Meter supply from measurement circuit.
- Measurement of basic power quantities: U_{L-L}, U_{L-N}, I_n, f, P, Q, S, PF, tgφ, cosφ, φ, Ep+, Ep-, E_{qL}, E_{qC}, THD.
- 2 alarm outputs.
- Pulse output for active energy.
- Interface RS485 Modbus Slave.
- LCD display 3.5" .
- Protection grade from the frontal side IP65.

Features:

eCon, RTC, MODBUS, Password protection, IP65, THD, P,Q C|L L|C

Input:

AC

Outputs:

RS 485, 2x, pulse

Galvanic isolation:

Supply, RS 485

Example of application

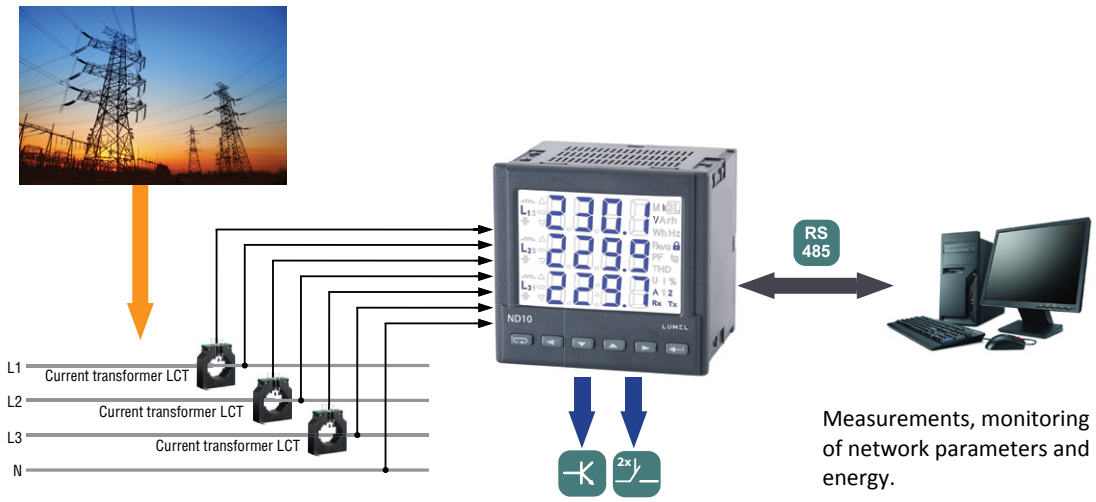

Measurements, monitoring of network parameters and energy.

Measured Quantities and Measuring Ranges

Measured value	Indication range	Measuring range	L1	L2	L3	Σ	Basic error
Current In 1 A 5 A	0.00...1.5 kA 0.00 ... 60 kA	0,005...1,200 A~ 0,025...6,000 A~	•	•	•		±0.2 % r
Voltage L-N 57,7 V 230 V 290 V	0.0 ... 230.8 kV 0.0 ... 1.012 MV 0.0 ... 1.200 MV	50...64 V~ 195...253 V~ 246...300 V~	•	•	•		±0.2% mv
Voltage L-L 100 V 400 V 500 V	0.0 ... 440 kV 0.0 ... 1.752 MV 0.0 ... 2.000 MV	85...110 V~ 340 ... 440 V~ 425 ... 520 V~	•	•	•		±0.5% mv
Frequency	47.0 ... 63.0 Hz	47,0...63,0 Hz	•	•	•		±0.2% mv
Active power	-9999 MW ... 0.00 W ... 9999 MW	-1,52 kW...1,0 W...1,52 kW	•	•	•	•	±0.5% r
Reactive power	-9999 Mvar ...0.00 var ... 9999 Mvar	-1.52 kvar...1.0 var...1.52 kvar	•	•	•	•	±0.5% r
Apparent power	0.00 VA ... 9999 MVA	1.0 VA...1.52 kVA	•	•	•	•	±0.5% r
Power factor PF	-1 ... 0... 1	-1...0...1	•	•	•	•	±1% r
Tangent φ	-1.2 ... 0 ... 1.2	-1.2...0...1.2	•	•	•	•	±1% r
Cosine φ	-1...1	-1...1	•	•	•	•	±1% r
φ	-180...180	-180...180	•	•	•		±0.5% r
Imported active energy	0 ... 99 999 999.9 kWh					•	±0.5% r
Exported active energy	0 ... 99 999 999.9 kWh					•	±0.5% r
Inductive reactive energy	0 ... 99 999 999.9 kvarh					•	±0.5% r
Reactive capacitive energy	0 ... 99 999 999.9 kvarh					•	±0.5% r
THD	0 ... 100%	0 ... 100%	•	•	•		±5% r

r - of the range
mv - of the measured value

Outputs

Output type	Properties
Relay output	• 2 relays, normally open voltageless contacts, load capacity 250 V~/0,5 A~
Pulse output of active energy	• 1 OC type (NPN), passive class A acc. to EN 62053-31, supply voltage 18...27 V, current 10...27 mA

Export department:
+48 68 45 75 139 /321/ 368
Fax: +48 68 32 54 091
e-mail: export@lumel.com.pl

LUMEL S.A.
ul. Sulechowska 1
65-022 Zielona Góra
POLAND
WWW.LUMEL.COM.PL

LUMEL
EVERYTHING COUNTS

ND10 METER OF NETWORK PARAMETERS

DIGITAL INTERFACE

Interface type	Transmission protocol	Mode	Baud rate
RS-485	MODBUS RTU	8N2, 8E1, 8O1, 8N1	4.8; 9.6; 19.2; 38.4 kbit/s

EXTERNAL FEATURES

Readout field	LCD 3.5" screen, specialized, monochromatic with backlit	
Weight	< 0.3 kg	
Overall dimensions	96 × 96 × 77 mm	panel cut-out: $92^{+0,6} \times 92^{+0,6}$ mm
Protection grade (acc. to EN 60529)	from frontal side: IP65	from terminal side: IP20

RATED OPERATING CONDITIONS

Supply voltage /from measurement circuit of phase L3/	50...64 V a.c. , 195...253 V a.c., 246...300 V a.c.; 47...63 Hz	Power consumption: - in voltage circuit L1,L2 ≤ 0.05 VA - in voltage circuit L3 ≤ 3 VA - in current circuits ≤ 0.05 VA
Temperature	ambient: -20...23...55°C	storage: -30...70°C
Relative humidity	25...95%	inadmissible condensation
Operating position	any	
External magnetic field	40...400 A/m	
hort duration overload (5 s)	voltage input: 2 Un	current input: 10 In

SAFETY AND COMPATIBILITY REQUIREMENTS

Electromagnetic compatibility	noise immunity	acc. toEN 61000-6-2
	noise emissions	acc. to EN 61000-6-4
Safety requirements		acc. to EN 61010-1

EXAMPLE OF CONNECTION DIAGRAM

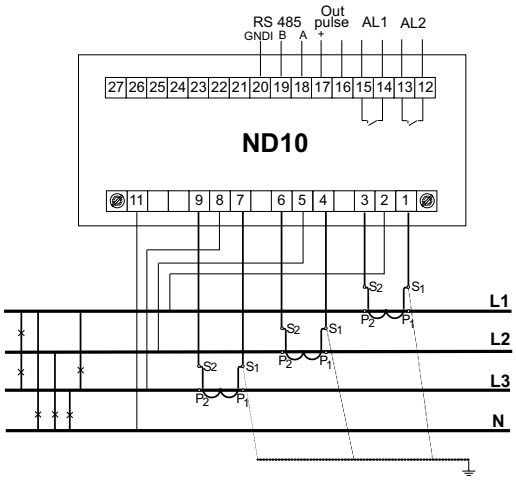

ORDERING

ND10	**X**	**X**	**X**	**XX**	**X**	**X**
Current input In:						
1 A (X/1)	**1**					
5 A (X/5)	**2**					
Voltage input (phase/ phase-to-phase) Un:						
3 x 57.7/100 V		**1**				
3 x 230/400 V		**2**				
3 x 290/500 V		**3**				
Digital output:						
with RS485 interface			**1**			
Version:						
standard				**00**		
custom-made*				**XX**		
Language:						
Polish					**P**	
English					**E**	
other*					**X**	
Acceptance tests:						
with an extra quality inspection certificate						**1**
acc. to customer's request*						**X**

EXAMPLE OF ORDER:
the code: **ND10 22100E1** means:
ND10 - meter of network parameters of ND10 type,
2 - current input 5 A,
2 - input voltage 3 x 230/400 V,
1 - with RS485 interface
00 - standard version,
E - all descriptions and user's manual in English,
1 - with extra quality inspection certificate.

* - after agreeing with the manufacturer

SEE ALSO:

eCon

Free eCon program for programming LUMEL's products. Available on our internet website.



LCT current transformers from 5 A to 6 kA.



P43 - three-phase transducer of power network parameters.

Castel Maggiore (BO) 40013
Via Lirone 60/i

e-mail: info@eurotecsrl.com
Tel: +39 051/6321595
Website: www.eurotecsrl.com

C.F.: 04103780377
P.I.: 01596581205