EUROTEC
TECNOLOGIE IMPIANTISTICHE - AUTOMAZIONE - TELECONTROLLO

LUMEL
EVERYTHING COUNTS

RAIL MOUNTED POWER NETWORK METER

N43



USER'S MANUAL

CE

CONTENTS

1. APPLICATION 5

2. METER SET 6

3. BASIC REQUIREMENTS, OPERATIONAL SAFETY 7

4. INSTALLATION 8

5. METER DESCRIPTION 10

5.1 Current inputs 10

5.2 Voltage inputs 10

5.3 Connection diagramms 10

6. N43 PROGRAMMING 16

6.1 Front panel 16

6.2 Power-on messages 18

6.3 Operating modes 19

6.4 Measure mode 20

6.5 Parameter settings 25

6.5.1 Settings of meter parameters 28

6.5.2 Settings of output parameters 30

6.5.3 Settings of alarm parameters 31
6.5.4 Pages configuration mode 38
7. SOFTWARE UPGRADES 43
8. SERIAL INTERFACES 46
8.1 RS-485 interface - list of parameters 46
8.2 USB interface - list of parameters 47
8.3 Examples of registers' readout and write 48
8.4 Map of N43 meter registers 54
9. ERROR CODES 76
10. ACCESSORIES 77
11. TECHNICAL DATA 78
12. ORDERING CODE 85

1. APPLICATION

The N43 meter,assembled on a rail, is a programmable digital instrument designed for the measurement of 3-phase, 3 or 4-wire power network parameters in balanced or unbalanced systems. The measured values are displayed on a dedicated LCD display. The meter enables control and optimization of the power electronic devices, systems and industrial installations.

The meter can be used for measuring: RMS of voltage and current, active, reactive and apparent power, active and reactive energy, power factors, frequency,THD and averaged values P Demand - „power guard”, S Demand, I Demand /15, 30 or 60 minutes/. Voltages and currents are multiplied by given voltage and current ratios of the measuring transformers /for indirect connections/. Power and energy indications take into account all programmed ratio values. The value of each measured value can be transmitted to the master system via the RS-485 interface. Three relay outputs signal the overflow of the chosen quantity, and the pulse output can be used for the consumption check of 3-phase active energy.

There is a galvanic separation between following units of the meter:

- supply,
- voltage and current inputs,
- RS-485,
- USB,
- pulse output OC,
- alarm outputs.

2. METER SET

Complete set of the meter includes:

- N43 Meter..... 1 pc
- user’s manual..... 1 pc
- CD ..... 1 pc

3. BASIC REQUIREMENTS, OPERATIONAL SAFETY

In terms of operational safety it meets the requirements of the EN 61010-1 standard.



Comments concerning safety:

- The meter should be installed and connected only by a qualified personnel. All relevant safety measures should be observed during installation.
- Always check the connections before turning the meter on.
- Prior to taking the meter housing off, always turn the supply off and disconnect the measuring circuits.
- Removal of the meter housing during the warranty period voids the warranty.
- This meter conforms to all requirements of the electromagnetic compatibility in the industrial environment.
- The building installation should have a switch or a circuit--breaker installed. This switch should be located near the device, easy accessible by the operator and suitably marked.

4. INSTALLATION

The meter is designed for installation in modular distribution boards on a 35 mm rail. The meter housing is made of plastic.

Housing dimensions: 105 x 110 x 60 mm. There are screw terminal strips on the outer side of the meter which enable the connection of external wires with diameter up to 5.3 mm2 /indirect measurement/ and up to 16 mm^2 /direct measurement/.

The meters should not be installed on the rail in direct contact with other devices that emit heat (e.g. other N43 meters). There must be a minimum 5 mm spacing between devices in order to enable heat transfer from a housing to the environment. Otherwise, the ambient temperature of a meter working in direct contact with other devices can exceed the operating temperature specified in rated operating conditions.

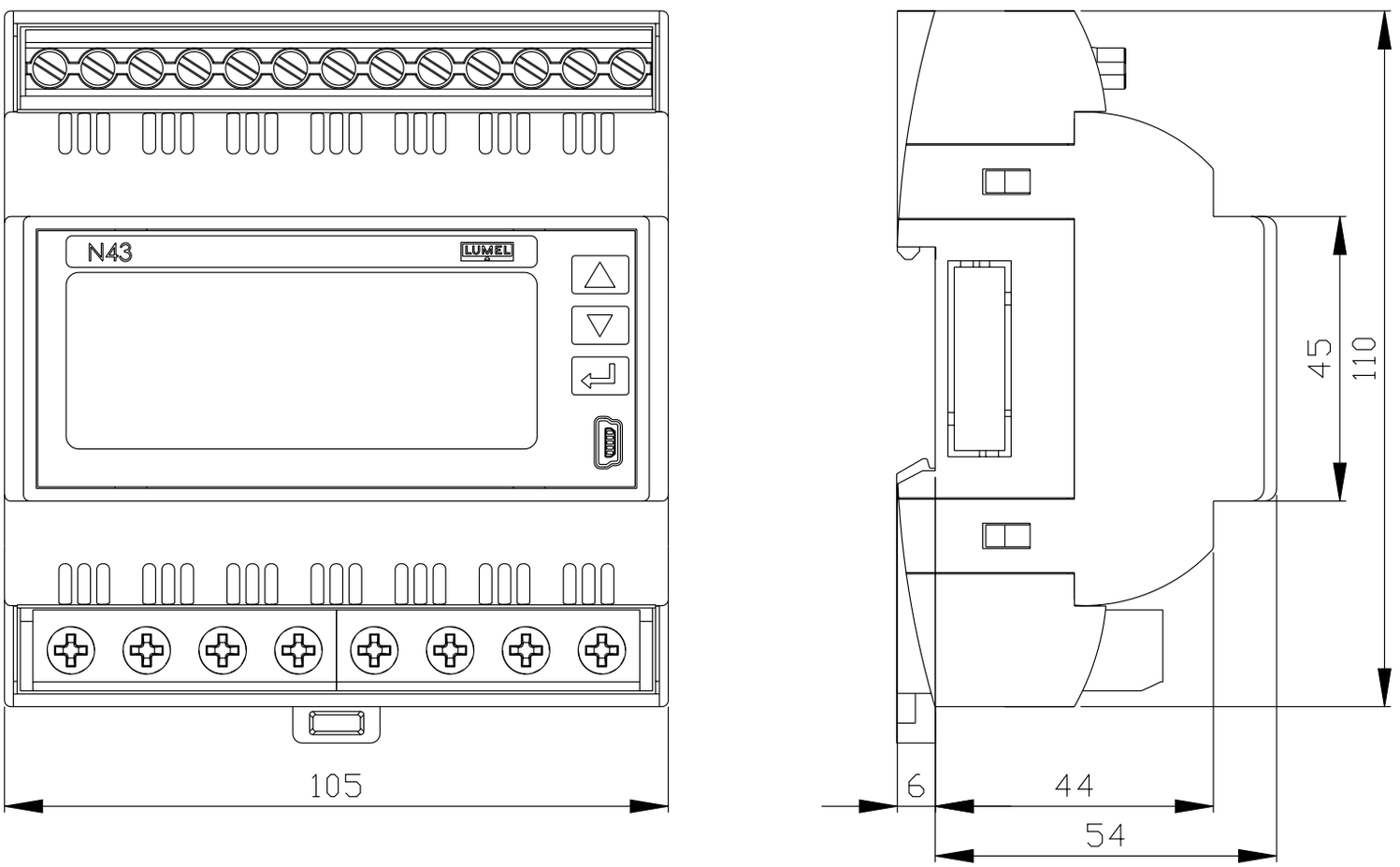

Fig. 1. Meter dimensions

5. METER DESCRIPTION

5.1 Current inputs

All current inputs are galvanically isolated (internal current transformers). The meter is adapted for direct connections /up to 63 A/ or to work with external measuring current transformers /version 1 A/5 A /. Displayed current values and derivative quantities are automatically converted in relation to the introduced external current transformer ratio.

5.2 Voltage inputs

Quantities on voltage inputs are automatically converted acc. to the introduced ratio of the external voltage transformer. Voltage inputs are specified in the order as either 3 x 57.7/100 V, 3 x 230/400 V or 3 x 290/500 V.

5.3 Connection diagrams

a) Meter connection diagrams in the 3-phase 4-wire network

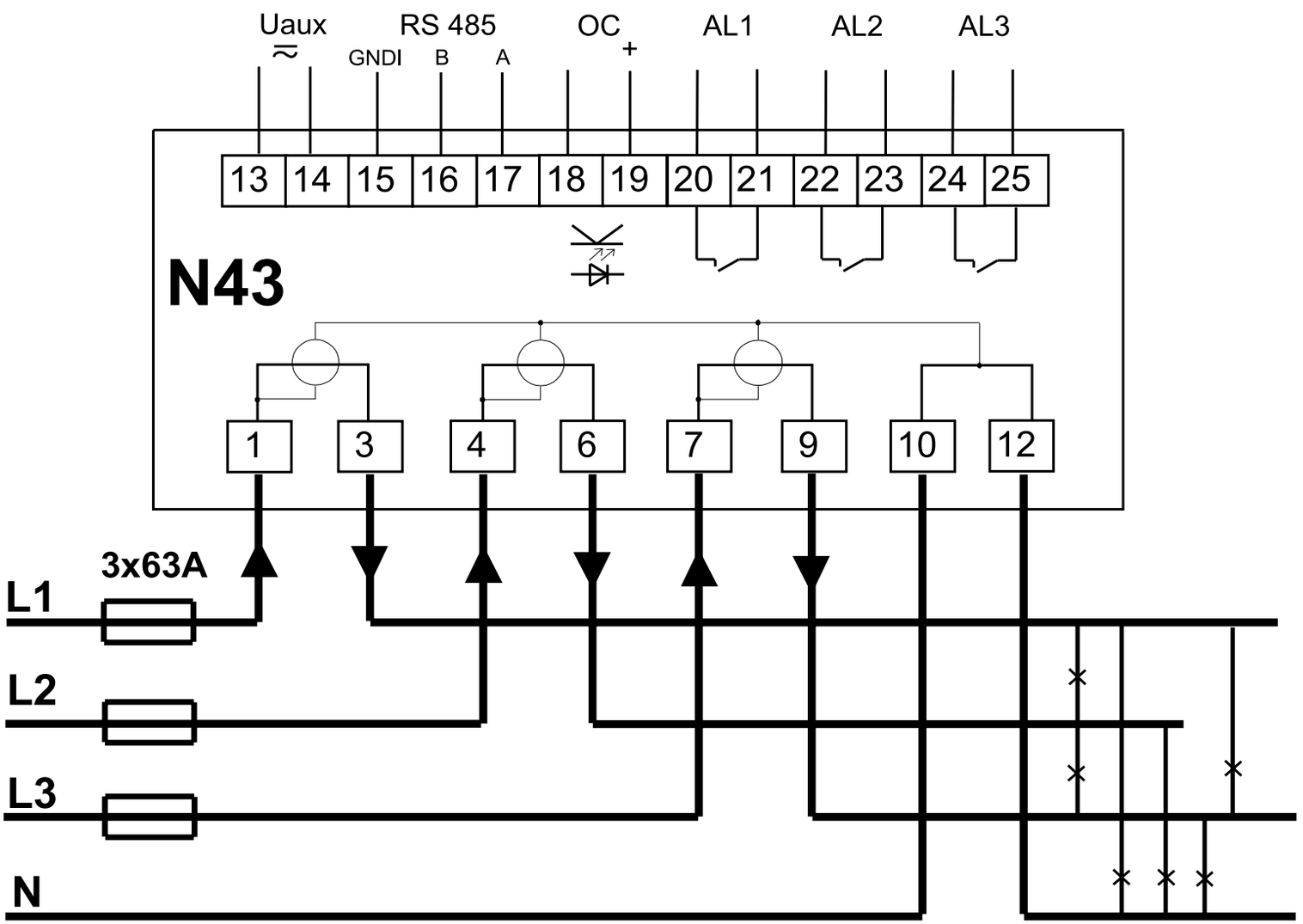

Direct measurement in 4-wire network

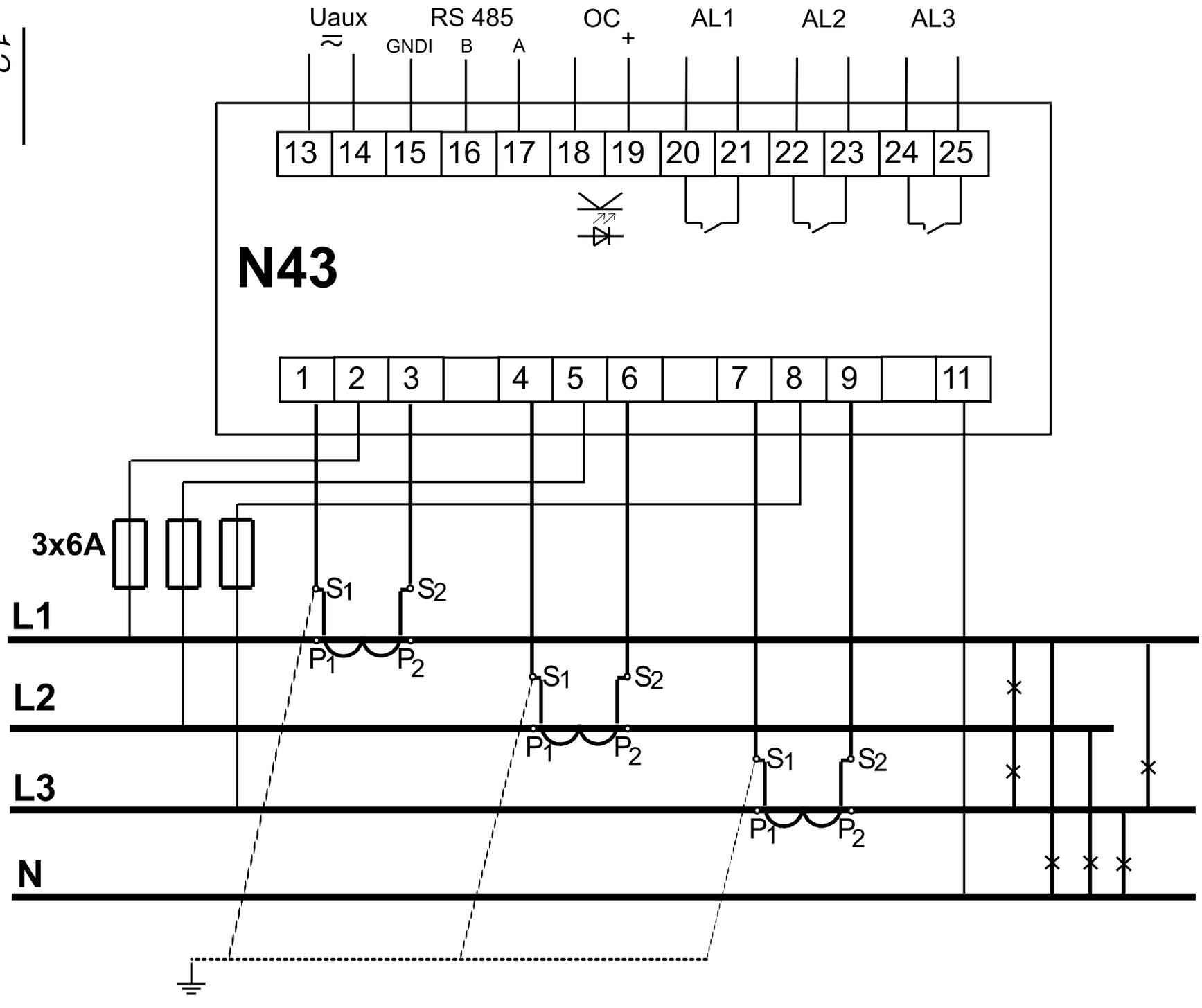

Semi-indirect measurement in 4-wire network

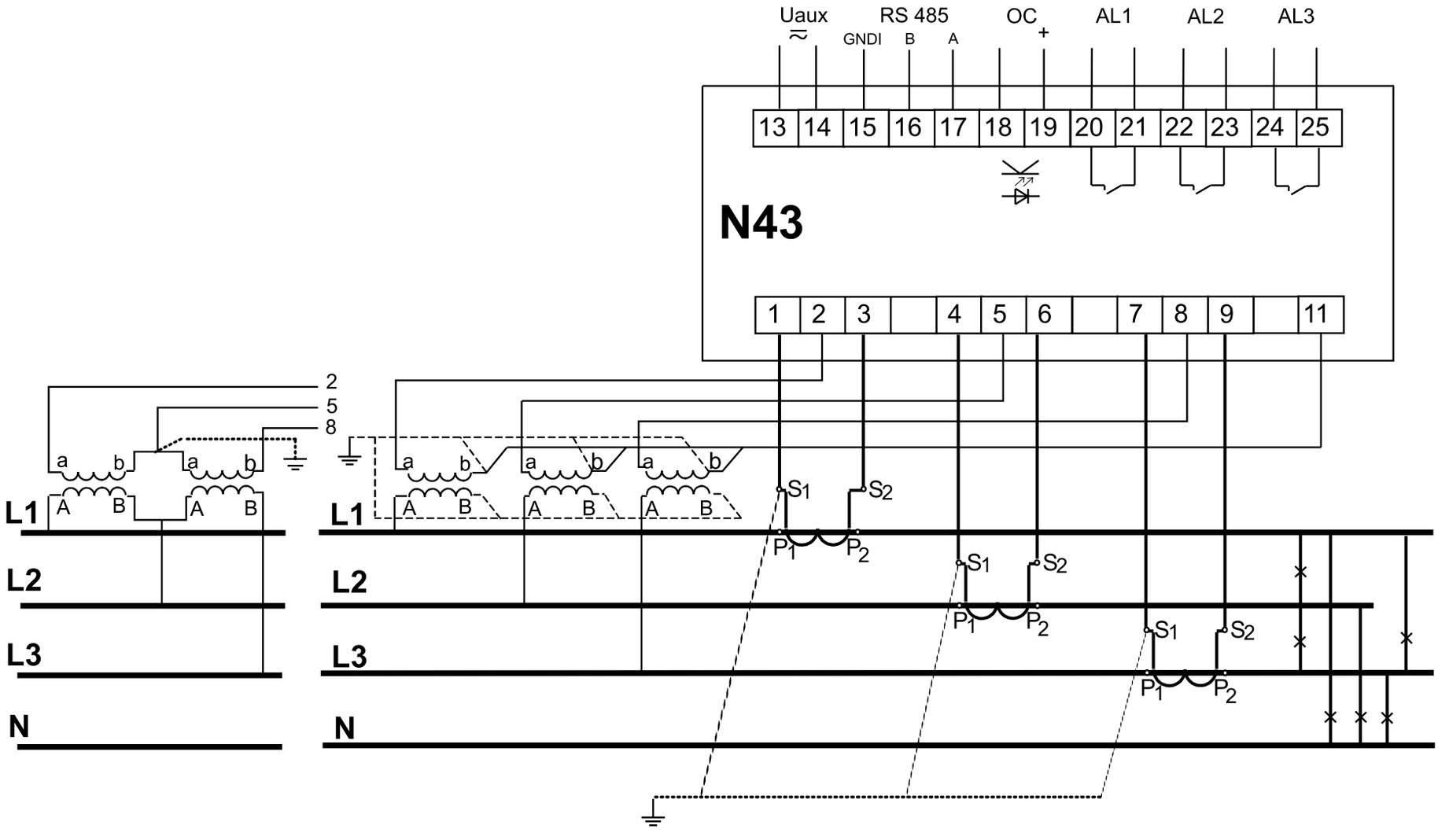

Indirect measurement with the use of 3 current transformers and 2 or 3 voltage transformers in a 4-wire network

b) Meter connection diagrams in the 3-phase 3-wire network

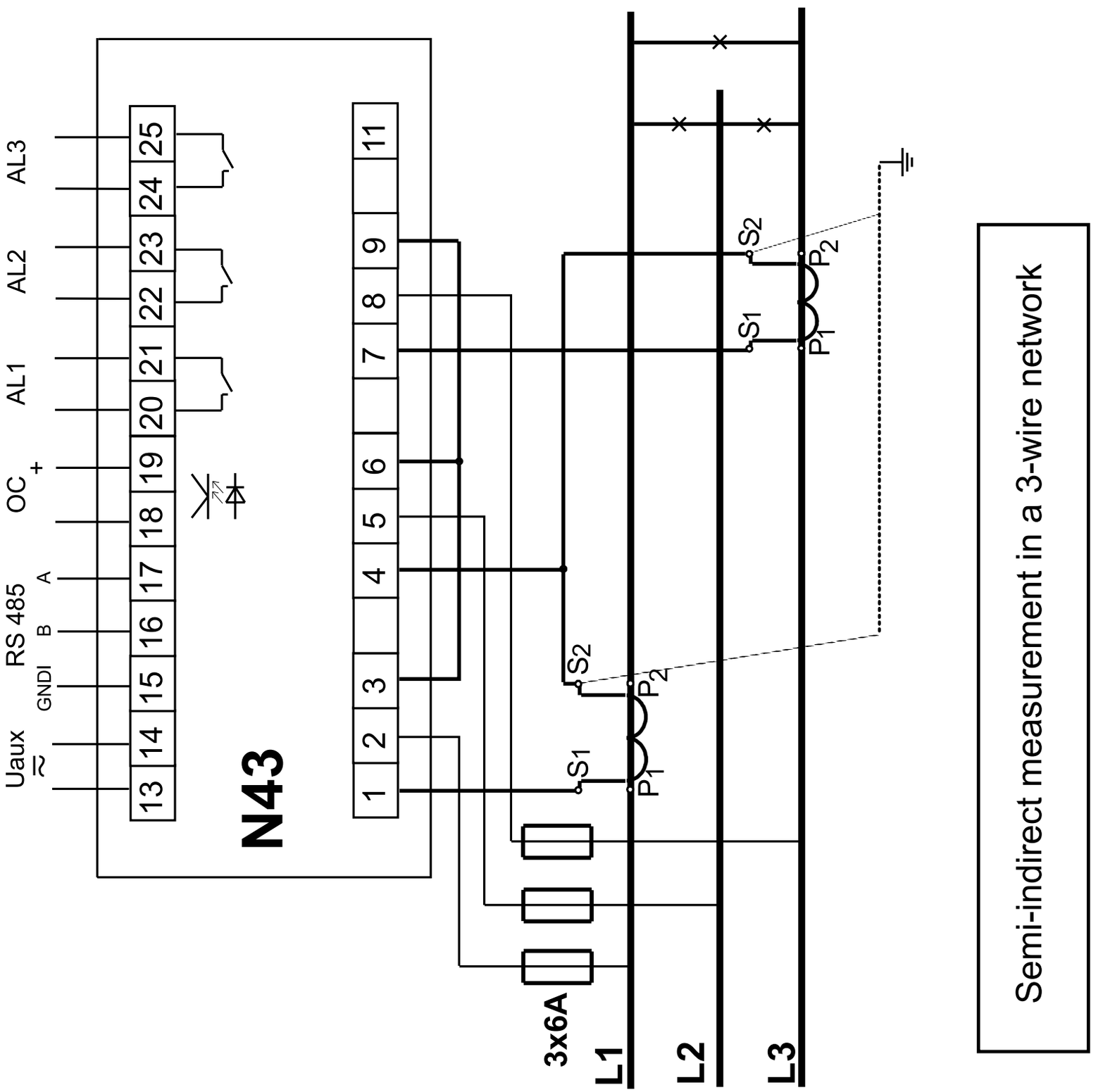

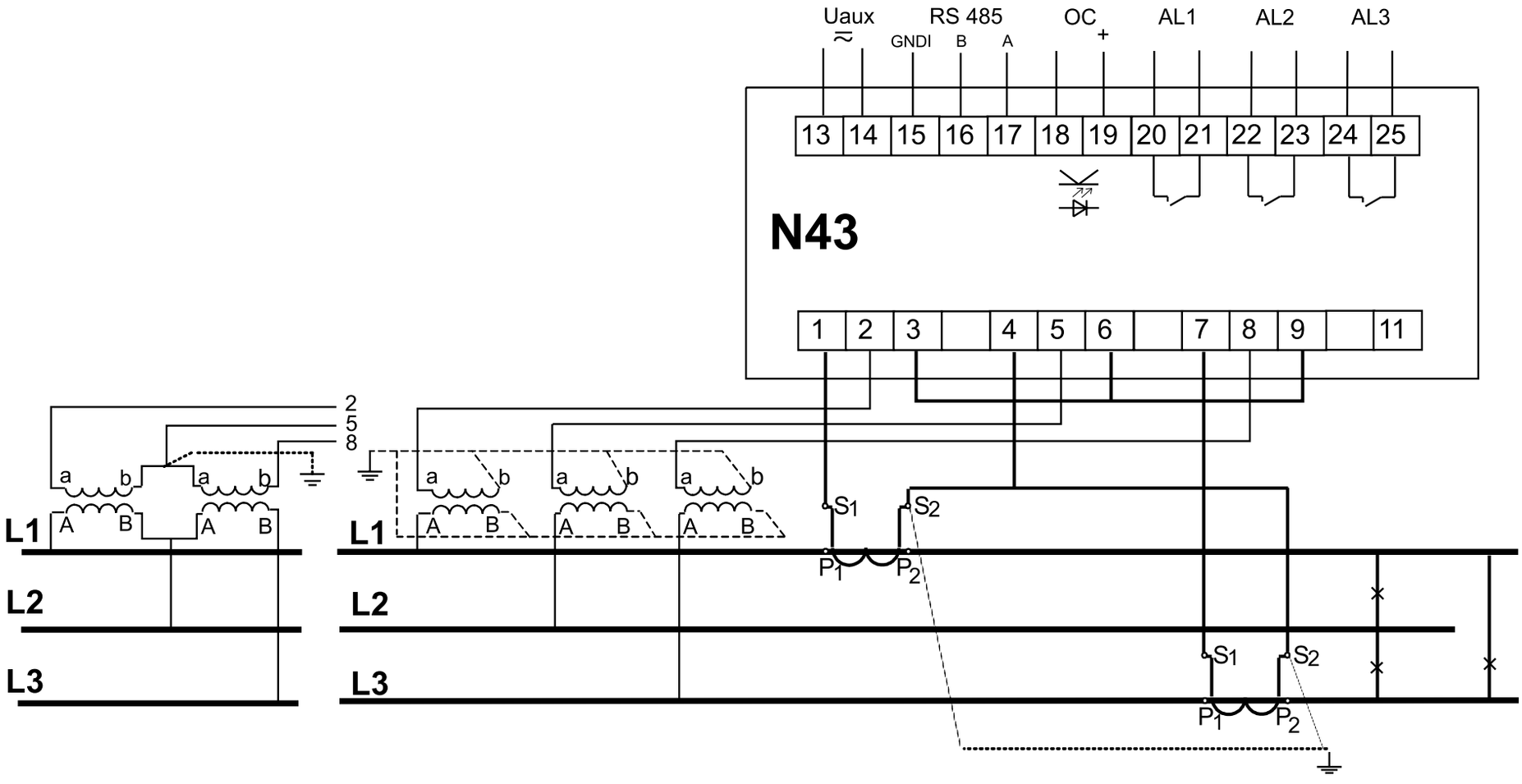

Direct measurement with the use of 2 current transformers and 2 or 3 voltage transformers in a 3-wire network

Fig 2. Meter connection diagrams in a network: a) 3-phase 4-wire, b) 3-phase 3-wire

6. N43 PROGRAMMING

6.1 Front panel

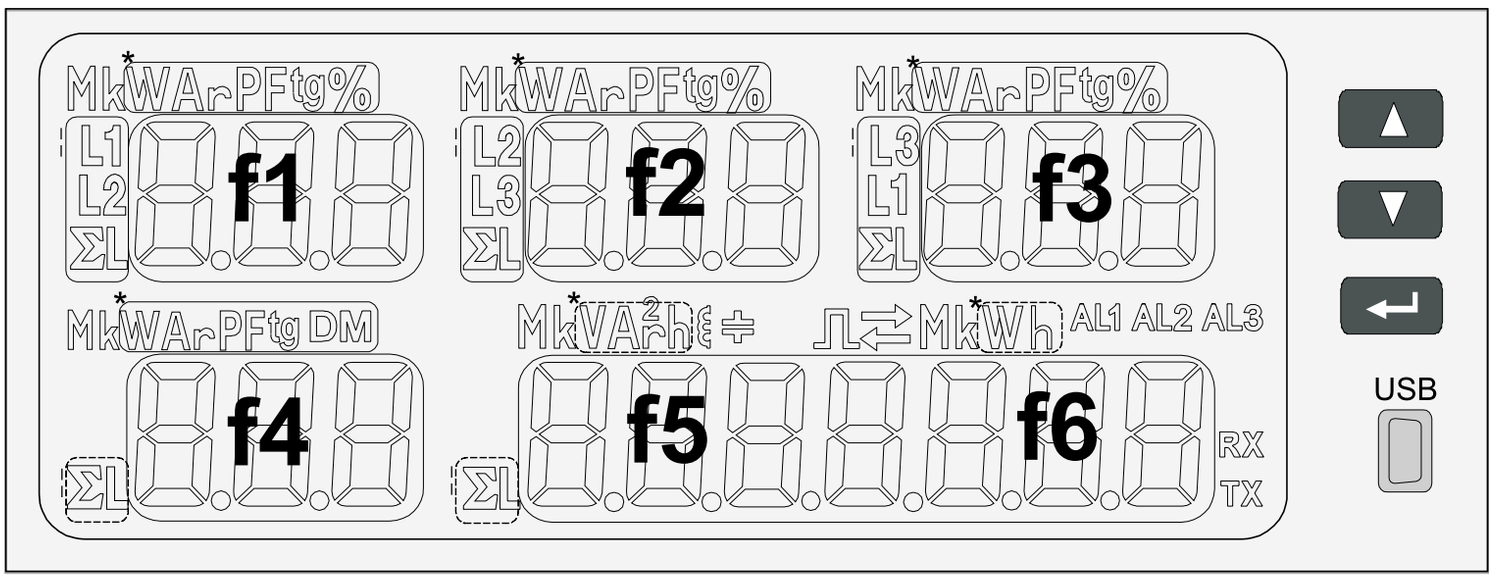

Fig. 3. Front panel

Front panel description:

	increase value button and right displacement	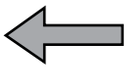	active energy export
	decrease value button and left displacement	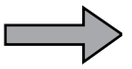	active energy import
	confirm button (ENTER)		symbol of energy / reactive inductive power
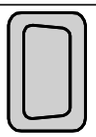	USB socket		symbol of energy / reactive capacity power
f1...f6	6 field 3-digit displays for readout and setting, fields **f5** and **f6** can create one 7-digit field	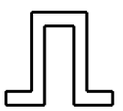	symbol of pulse output
*	units of the displayed values	AL1 AL2 AL3	symbols of alarms activation
	indication of displayed phase		kilo = 10^3
			Mega = 10^6

6.2 Power-on messages

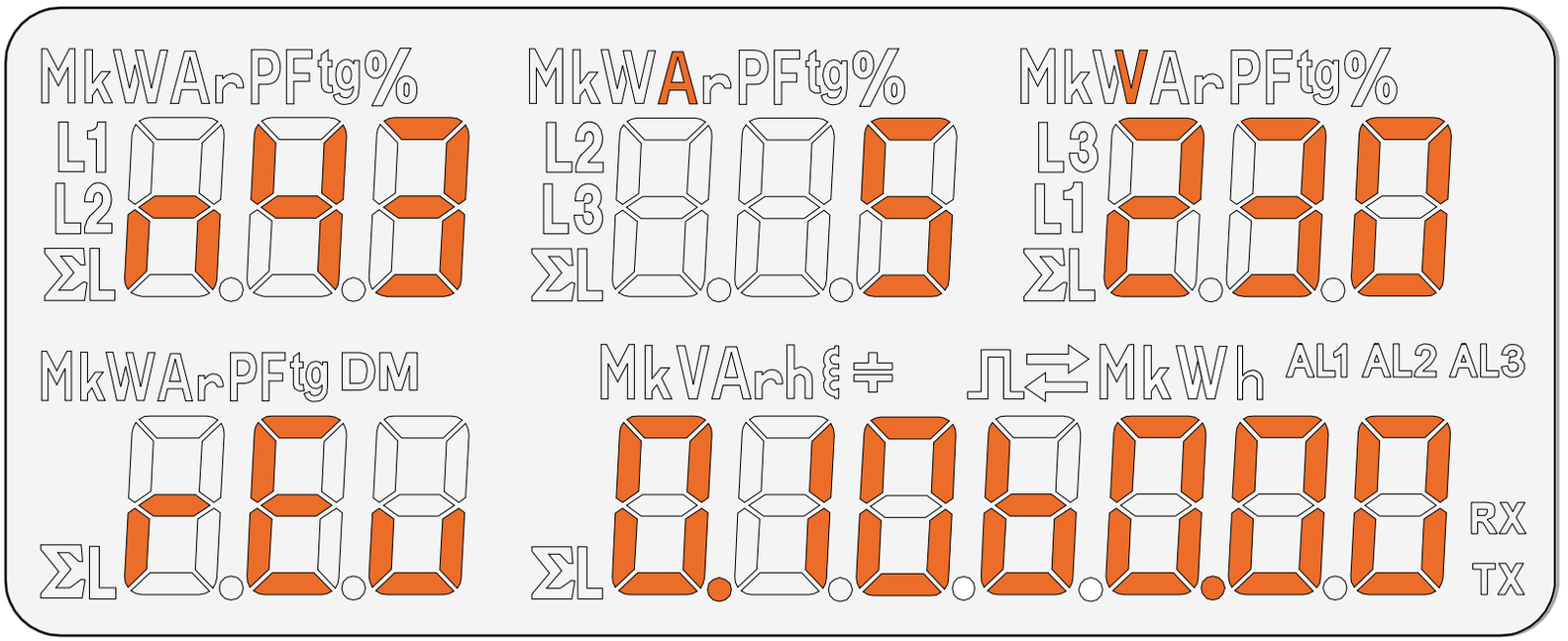

Fig. 4. Message after starting the meter

After switching the supply on, the meter performs a display test and displays the N43 meter name, build and current software as well as bootloader version.

where: n43 – meter type, 5A 230V – version
rEu revision
0.10 program version number
b0.00 bootloader version number

6.3 Operating modes

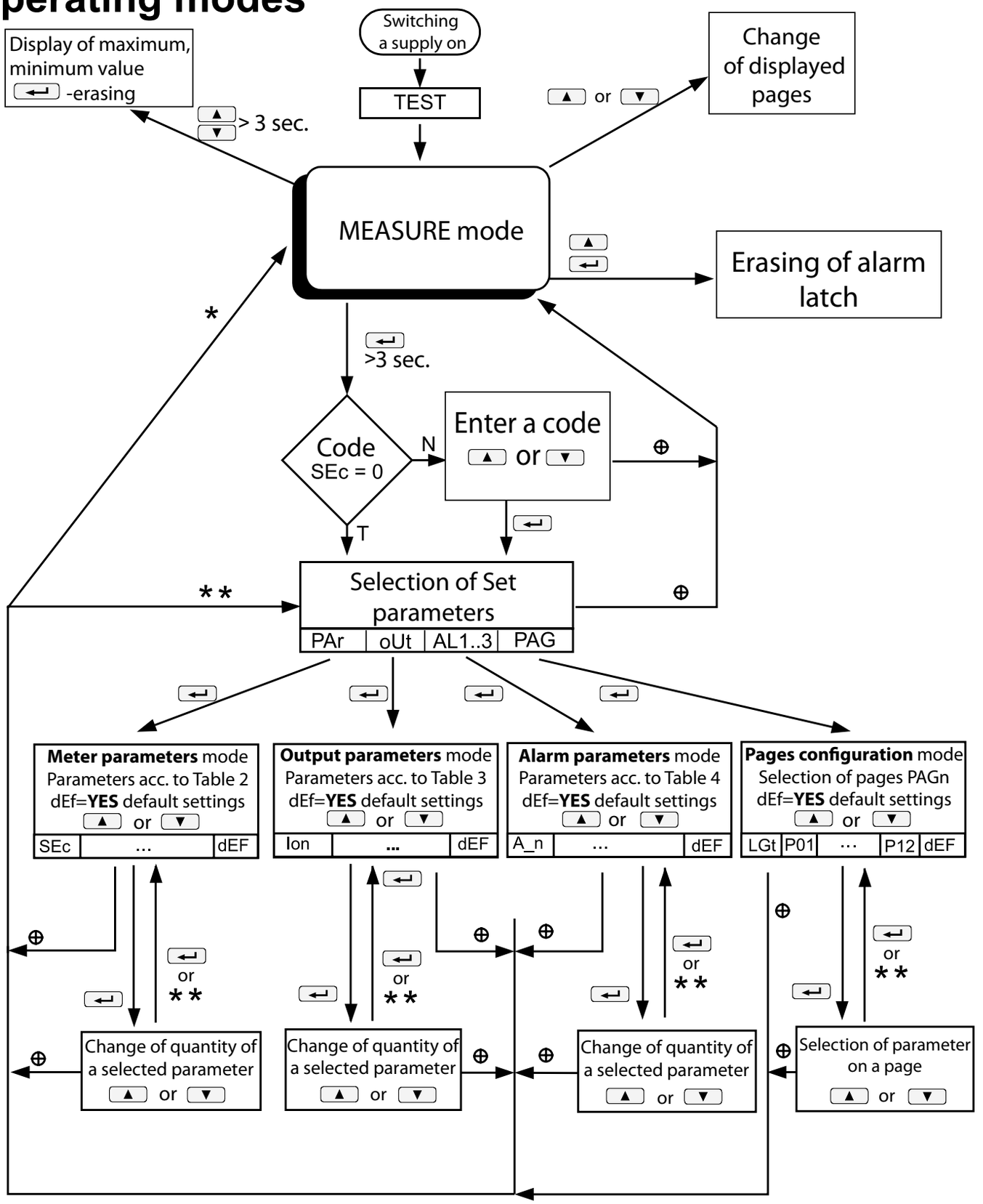

Fig. 5. N43 meter operating modes

⊕ means: * or **

* >15 sec.

** simultaneous pressure of the buttons

6.4 MEASURE Mode

In **Measure** mode the values are displayed according to the pages that are preset at the factory or configured by the user in Pages Programming **PAG**.
Changing the page is done by pressing the ▲ or ▼.
The sequence of displayed pages is according to a table created in PAG mode.
Entry into monitoring of maximum and minimum values mode occurs when pressing at the same time the buttons ▲ and ▼ for at least 3 seconds. Erasing maximum and minimum values is done by pressing the button ↵ while monitoring their value.Alarms are active if they were allocated. Note that the alarms do not need to be associated with quantities displayed on the page because the change of a page would result in action on two-state outputs.
Erasing alarm signalization latch / if it was set in the Alarm parameters mode **AIn** / is done by pressing the buttons ▲ ▼.

When reactive power or energy is displayed, this indication is accompanied by a symbol of the inductive load  or capacity load 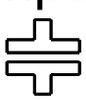.
When active energy is displayed, this indication is accompanied by a symbol of  active energy export or 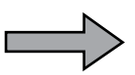 active energy import.

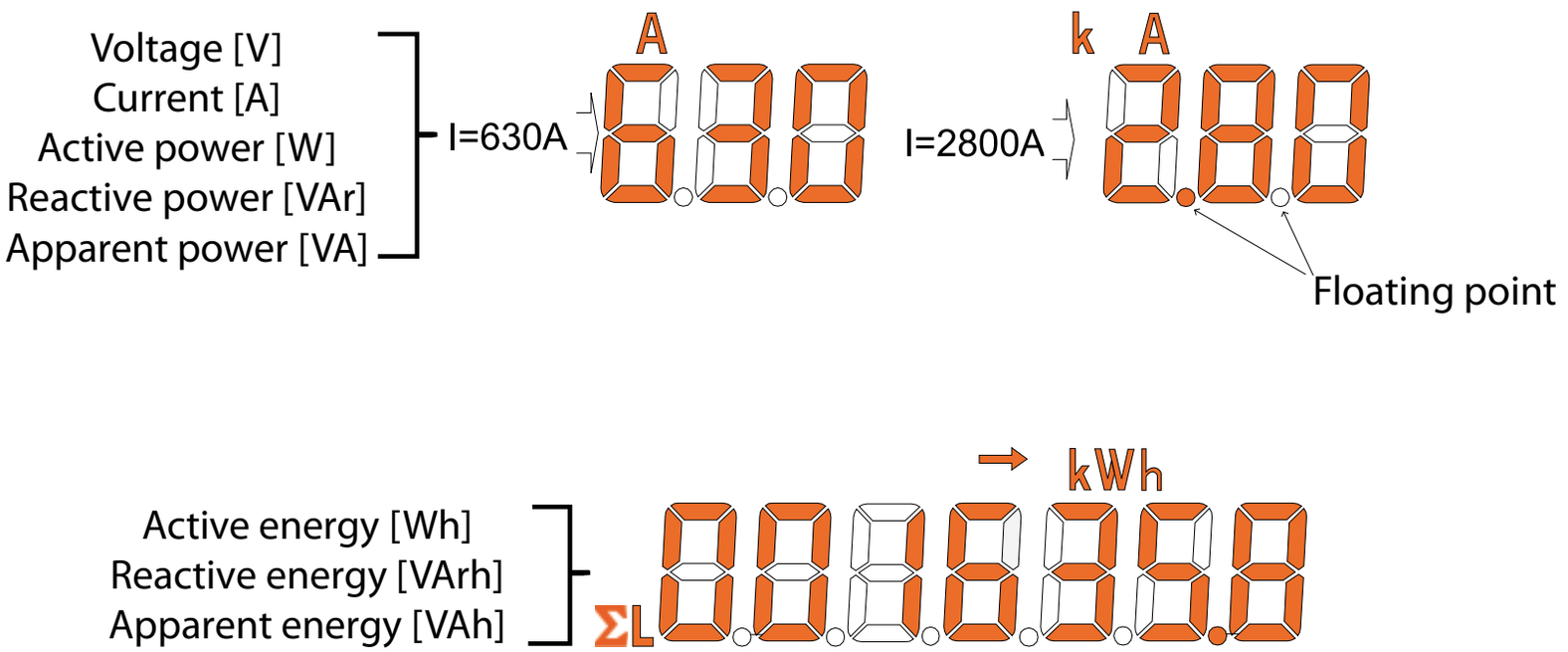

Fig 6. Formats of displayed values.

Exceeding of the upper or lower indication range is signaled on the display by upper horizontal lines. For measurement of the averaged values (P Demand, S Demand, I Demand) single measurements are carried out with one second quantum, however, visualized every 15 seconds. Averaging time to choose from: 15, 30 or 60 minutes. After the meter is turned on or after the averaged values are reset, the first value will be calculated in 15 seconds after turning meter on or resetting. Until all samples of the averaged values are acquired, the values are calculated from already measured samples.

Current value in the neutral wire $I_{(N)}$ calculated from phase current vectors is available in the registry 7544 of the serial interface.
The alarm switching on is signaled by the lighting of the AIn inscription (n= 1..3). The end of alarm duration at the alarm signalization latch switched on, is indicated by the pulsation of the AIn inscription (n= 1..3).

Selection of the monitored value:

Table 1

No. of par.	Quantity name	Marking	Unit	Signaling	3Ph / 4W	3Ph / 3W	Available display fields
00	no quantity - blanked display	oFF			√	√	**f1,f2,f3,f4,f5,f6**
01	L1 phase voltage	U 1	(k)V	L1	√	x	**f1**
02	L1 phase wire current	I 1	(k)A	L1	√	√	**f1**
03	L1 phase active power	P 1	(M,k)W	L1	√	x	**f1**
04	L1 phase reactive power	q 1	(M,k)VAr	L1	√	x	**f1**
05	L1 phase apparent power	S 1	(M,k)VA	L1	√	x	**f1**

06	L1 phase active power factor (PF1=P1/S1)	PF 1	PF	L1	√	x	**f1**
07	tgφ factor of L1 phase (tg1=Q1/P1)	tG 1	tg	L1	√	x	**f1**
08	L1 phase voltage THD	tHdU 1	V%	L1	√	x	**f1**
09	L1 phase current THD	tHdI 1	A%	L1	√	x	**f1**
10	L2 phase voltage	U2	(k)V	L2	√	x	**f2**
11	L2 phase wire current	I 2	(k)A	L2	√	√	**f2**
12	L2 phase active power	P2	(M,k)W	L2	√	x	**f2**
13	L2 phase reactive power	Q2	(M,k)VAr	L2	√	X	**f2**
14	L2 phase apparent power	S2	(M,k)VA	L2	√	X	**f2**
15	L2 phase active power factor (PF2=P2/S2)	PF2	PF	L2	√	X	**f2**
16	tgφ factor of L2 phase (tg2=Q2/P2)	tG2	tg	L2	√	X	**f2**
17	L2 phase voltage THD	tHdU2	V%	L2	√	X	**f2**
18	L2 phase current THD	tHdI 2	A%	L2	√	X	**f2**
19	L3 phase voltage	U3	(k)V	L3	√	X	**f3**
20	L3 phase wire current	I 3	(k)A	L3	√	√	**f3**
21	L3 phase active power	P3	(M,k)W	L3	√	X	**f3**
22	L3 phase reactive power	Q3	(M,k)VAr	L3	√	X	**f3**
23	L3 phase apparent power	S3	(M,k)VA	L3	√	X	**f3**
24	L3 phase active power factor (PF3=P3/S3)	PF3	PF	L3	√	X	**f3**

25	tgφ factor of L3 phase (tg3=Q3/P3)	tG3	tg	L3	√	X	**f3**
26	L3 phase voltage THD	tHdU3	V%	L3	√	X	**f3**
27	L3 phase current THD	tHdI 3	A%	L3	√	X	**f3**
28	3-phase mean current*	I S	(k)A	ΣL	√	√	**f1,f2,f3,f4,f5**
29	3-phase active power	P	(M,k)W	ΣL	√	√	**f1,f2,f3,f4,f6**
30	3-phase reactive power	q	(M,k)VAr	ΣL	√	√	**f1,f2,f3,f4,f5**
31	3-phase apparent power	S	(M,k)VA	ΣL	√	√	**f1,f2,f3,f4,f5**
32	3-phase active power factor (PF=P/S)	PF	PF	ΣL	√	√	**f1,f2,f3,f4**
33	tgφ factor 3 phases mean (tg=Q/P)	tG	tg	ΣL	√	√	**f1,f2,f3,f4**
34	Frequency	F	F	ΣL	√	√	**f4**
35	Phase-to-phase voltage L1-L2	U 12	(k)V	L1 L2	√	√	**f1**
36	Phase-to-phase voltage L2-L3	U23	(k)V	L2 L3	√	√	**f2**
37	Phase-to-phase voltage L3-L1	U3 1	(k)V	L3 L1	√	√	**f3**
38	Mean phase-to-phase voltage *	U 123	(k)V	ΣL	√	√	**f1,f2,f3,f4,f5**
39	Active power averaged (P Demand)*	PdE	(M,k)W	ΣL DM	√	√	**f4**
40	Reactive power averaged (S Demand)*	SdE	(M,k)VA	ΣL DM	√	√	**f4**
41	Current averaged (I Demand) *	I dE	(k)A	ΣL DM	√	√	**f4**
42	Active 3-phase input energy	EnP	(M,k)Wh	ΣL →	√	√	**f5-f6**

43	Active 3-phase output energy	EnP	(M,k)Wh	ΣL	√	√	**f5-f6**
44	Reactive 3-phase inductive energy	En9	(M,k)VArh	ΣL	√	√	**f5-f6**
45	Reactive 3-phase capacity energy	En9	(M,k)VArh	ΣL	√	√	**f5-f6**
46	3-phase apparent energy	En5	(M,k)VAh	ΣL	√	√	**f5-f6**
47	Time – hours, minutes, seconds	hoUr			√	√	**f5-f6**

* available minimum and maximum values on the display and interface registers

6.5 Parameter Settings

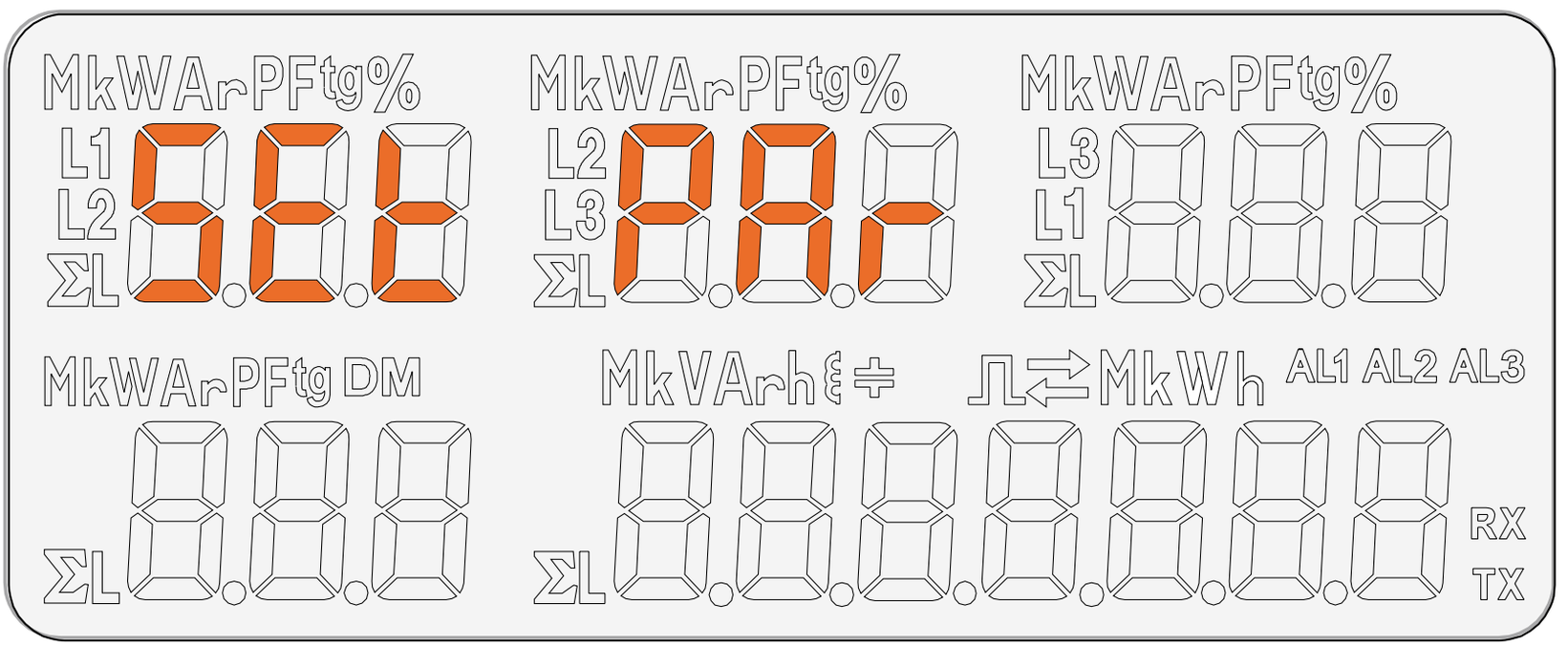

Fig 7. Setup menu

Programming mode is enabled by pressing and holding  button for about 3 seconds. To enable the programming user must enter a correct access code. If there is no such a code or after entering a correct code the program transits into the programming option. The message **SEt** (in the first field) and first parameter group **PAr** are displayed.
If the wrong access code is entered, only monitoring of the parameters is possible without possibility of changing them. Err cod is displayed and then rE Ad Par.
Free eCon software can also be used for configuration of the N43 meters, it is available on the website www.lumel.com.pl.

PAr Meter parameters	SEc Access code	con Type of system - connection	rnI Input current range	trI Current ratio	trU Voltage ratio	dIt Averaging time	SYn Averaging synchronization with the real-time	EnO Energy counters erasing	AuO Erasing averaged parameters	dEF Default settings
oUt Outputs parameters	Ion No. of impulses	Adr MODBUS Network Address	trb Transmission mode	bAU Baud rate	t.H Hour, minute	dEF Default settings				
AL 1 : AL3 Alarm parameters	A.n Quantity on the alarm outputs (tab. 5 of UM)	A.t Alarm type	AoF Lower value of the input range	Aon Upper value of the input range	Atn Time delay of switching on	AtF Time delay of switching off	A.b Alarm re--activation lock	A.S Alarm signalization latch	dEF Default settings	
PAG Pages configuration	LGt Display panel illumination	P01 Quantity on next fields of the page 1	...	P12 Quantity on next fields of the page 12	dEF Manufacturer's pages					

Fig. 8. Programming matrix

6.5.1 Setting of Meter Parameters

After entering the **SEt** procedure select with the button ▲ or ▼ mode **Par** and press ↵.
Buttons ▲ ▼ set the requested values. The active position is signaled by the cursor. The set value can be accepted by the button ↵ . Exit from the **SEt** procedure follows after pressing simultaneously the buttons ▲ ▼ or waiting approx. 15 seconds.

Table 2

Item	Parameter name	Marking	Range	Notes/ description	Manufacturer value
1	Access code entry	SEc	0..30000	0 – no code	0
2	Type of connection	con	3PH-4 3PH-3	3PH-4 – 3-phase, 4-wire 3PH-3 – 3-phase, 3-wire	3PH-4
3	Input current range	rn1	1A, 5A or 63A	Input range: 1A or 5A (for version **In** 1A/5A) or 63A (for version **In** 63A)	5 A

4	Current transformer ratio	trI	1 .. 10000		1
5	Voltage transformer ratio	trU	0,1…4000,0		1,0
6	Averaging time /Demand integration time/	dIt	t_15, t_30, t_60	Averaging time of active power P Demand, apparent power S Demand, current I Demand t_15, t_30, t_60	t_15
7	Averaging synchro-nization with the real-time clock	Syn		on/oFF	oFF
8	Energy counters erasing	EnD	no,En P, En q, En S, En ALL	no – no activity, En P – erase active energy, En q – erase reactive energy, En S – erase apparent energy, En ALL – erase all energies	no
9	Erasing averaged parameters	AUD		YES/no	no
10	Default settings	dEF	no, YES	reverting to default (factory) group settings **Par**	no

The automatic erasing of the energy is done with a change of voltage or current ratio.
During the acceptation the value insertion possibility in the range is checked. If the set value falls outside the allowable range, the meter remains in parameter setting mode and the value is set to the highest possible value (when entered value is too high) or lowest possible value (when it is too low).

6.5.2 Setting of Output Parameters

In the options, select the **oUt** mode and confirm your choice by pressing the button ↵.

Table 3

Item	Parameter name	Designation	Range	Notes/ description	Manufacturer value
1	Number of impulses of OC output	I on	100 ..20000	number of impulses/ 1kWh	1000
2	MODBUS Network Address	Adr	1…247		1
3	Transmission mode	trb	r8n2, r8E1, r8o1, r8n1		8n2
4	Baud rate	bAU	4.8 k, 9.6 k, 19.2 k, 38.4 k		9.6 k
5	Hour, minute	t_H	0,00.. 23,59		00.00
6	Default settings	dEF	no, yES	reverting to default (factory) group settings **Par**	n

6.5.3 Setting of alarm parameters

In the options select the **ALn** mode and confirm your choice by pressing the button ↵

Table 4

Item	Parameter name	Designation	Range	Notes/ description	Manufacturer value
1	Quantity on the alarm output	A_n	0..42	code as in Tab. 5	AL1=U123 AL2=IS AL3=P
2	Alarm type	A_t	n-on, n-oFF, on,oFF, H-on, H-oFF,	Fig. 9	n-on
3	Lower value of the input range	AoF	-144.0…144.0	in % of the rated quantity value	90.0
4	Upper value of the input range	Aon	-144.0…144.0	in % of the rated quantity value	110.0
5	Time delay of the switch on reaction	Atn	0 … 3600	in seconds	0
6	Time delay of the switch off reaction	AtF	0 … 3600	in seconds	0

7	Alarm re-activation lock	A_b	0 … 3600	in seconds	0
8	Alarm signalization latch	A_S	on, oFF	When alarm signalization latch function is enabled and the alarm state ends, alarm symbol is not turned off but begins to flash. Alarm symbol flashes until it is turned off by pressing the buttons ▲ ↵ (> 3 sec). This function refers only to the alarm signalization, so the relay contacts will operate without a latch according to the selected alarm type.	oFF
9	Default settings	dEF	no, yES	restoring default (factory) group settings **PAr**	no

Entering the value Aon lower than AoF switches the alarm off.

a) **n-on**

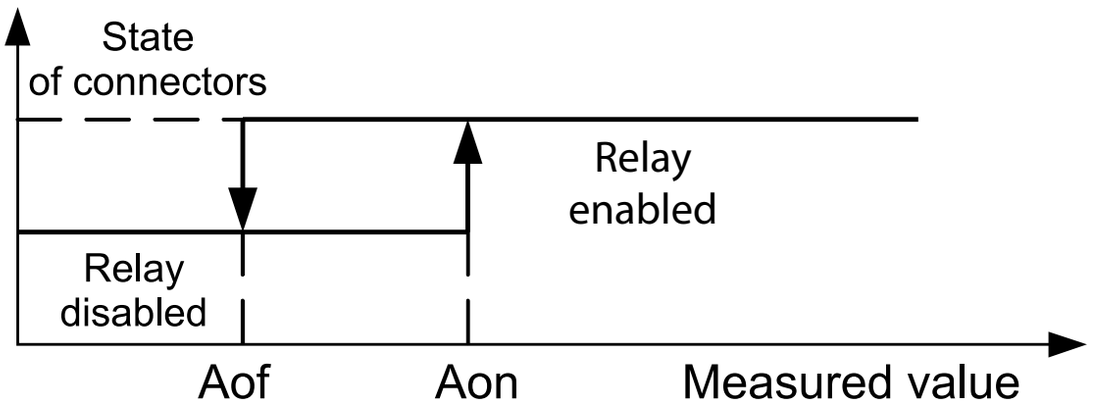

b) **n-oFF**

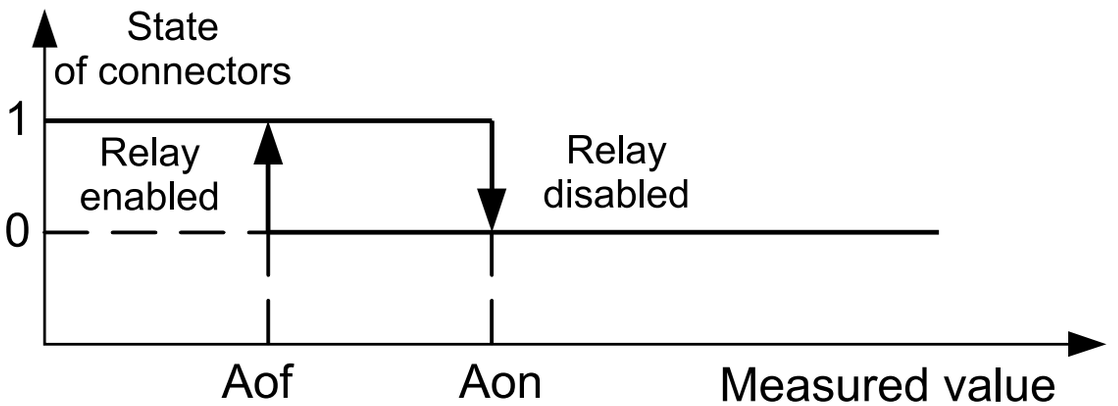

c) **On**

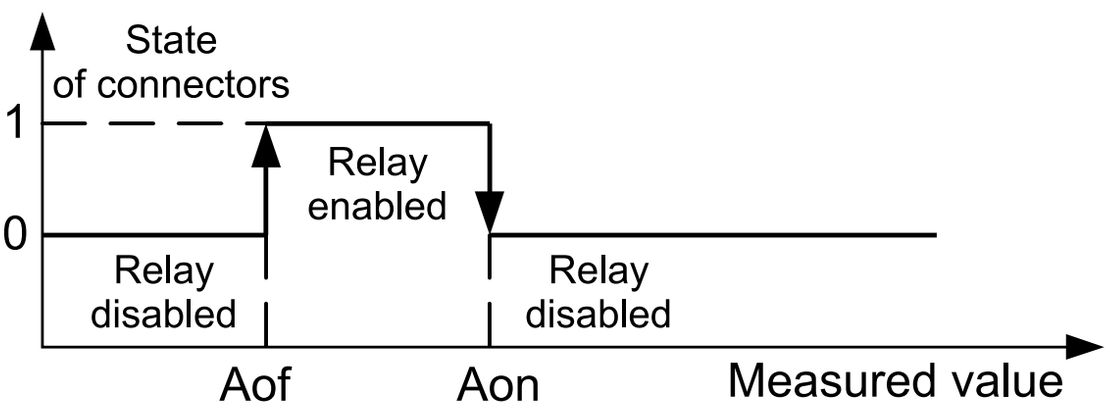

d) **OFF**

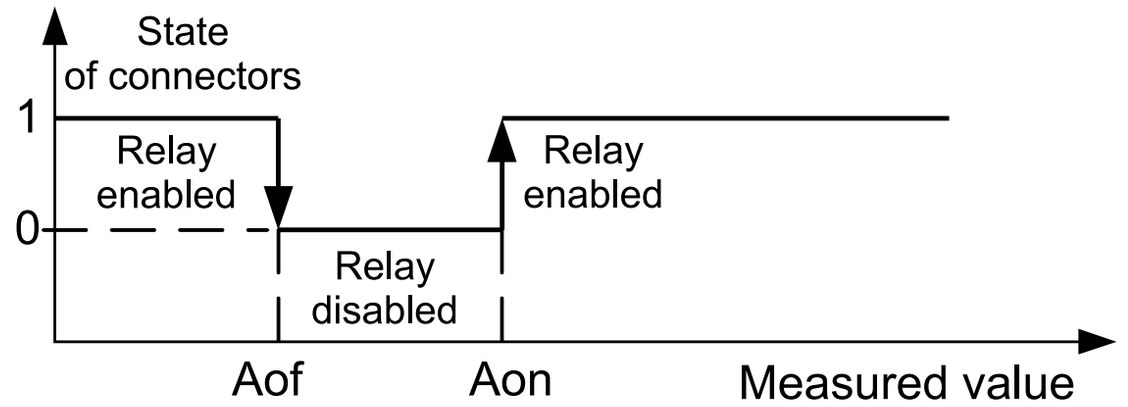

Fig. 9. Alarm types: a)n-on, b) n-oFF, c) On, d) OFF.

Remaining types of the alarm:

- H-on – always enabled;
- H-oFF – always disabled.

<u>Example no 1 of alarm setting:</u>

Set alarm **n-on** type for monitored quantity P – 3-phase active power,

Version: 5 A; 3 x 230/400 V. Setting the alarm on after exceeding 3800 W, switching the alarm off after power drops to 3100 W.

Calculations: rated 3-phase active power: P = 3 x 230 V x 5 A = 3450 W

3450 W – 100 % 3450 W – 100 %

3800 W – Aon % 3100 W – AoF %

In conclusion: Aon = 110.0 % AoF = 90.0 %

Set: Monitored quantity: P; Alarm type: n-on, Aon 110.0, AoF 90.0.

Selection of quantities on the alarm outputs:

Table 5

Item/ value in the register 4014, 4022, 4030	Dis-played element	Quantity type	Value needed for calcula-tions of percentage of the alarm values (100 %)
00	oFF	no quantity /alarm disabled/	none
01	U_1	L1 phase voltage	Un [V] *
02	I_1	L1 phase wire current	In [A] *
03	P_1	L1 phase active power	Un x In x cos(0°) [W] *
04	q_1	L1 phase reactive power	Un x In x sin(90°) [VAr] *
05	S_1	L1 phase apparent power	Un x In [VA] *
06	PF1	L1 phase power factor (PF)	1
07	tg1	tgφ factor of L1 phase	1
08	THDU1	L1 phase voltage THD	100,00%
09	THDI1	L1 phase current THD	100,00%

10	U_2	L2 phase voltage	Un [V] *
11	I_2	L2 phase wire current	In [A] *
12	P_2	L2 phase active power	Un x In x cos(0°) [W] *
13	q_2	L2 phase reactive power	Un x In x sin(90°) [VAr] *
14	S_2	L2 phase apparent power	Un x In [VA] *
15	PF2	L2 phase power factor (PF)	1
16	tg2	tgφ factor of L2 phase	1
17	THDU2	L2 phase voltage THD	100.00%
18	THDI2	L2 phase current THD	100.00%
19	U_3	L3 phase voltage	Un [V] *
20	I_3	L3 phase wire current	In [A] *
21	P_3	L3 phase active power	Un x In x cos(0°) [W] *
22	q_3	L3 phase reactive power	Un x In x sin(90°) [VAr] *
23	S_3	L3 phase apparent power	Un x In [VA] *
24	PF3	L3 phase power factor (PF)	1
25	tg3	tgφ factor of L3 phase	1
26	THDU3	L3 phase voltage THD	100.00%

27	THDI3	L3 phase current THD	100.00%
28	U_A	mean 3-phase voltage	Un [V] *
29	I_A	mean 3-phase current	In [A] *
30	P	3-phase active power (P1+P2+P3)	3 x Un x In x cos(0°) [W] *
31	q	3-phase reactive power (Q1+Q2+Q3)	3 x Un x In x sin(90°) [VAr] *
32	S	3-phase apparent power (S1+S2+S3)	3x Un x In [VA] *
33	PF_A	3-phase power factor (PF)	1
34	tg_A	tgφ factor of 3 phases	1
35	FrEq	frequency	100 [Hz]
36	U12	phase-to-phase voltage L1-L2	√3 Un [V] *
37	U23	phase-to-phase voltage L2-L3	√3 Un [V] *
38	U31	phase-to-phase voltage L3-L1	√3 Un [V] *
39	U123	mean phase-to-phase voltage	√3 Un [V] *
40	Pdt	active power averaged (P Demand)*	3 x Un x In x cos(0°) [W] *
41	Sdt	reactive power averaged (S Demand)*	3 x Un x In [VA] *
42	Idt	current averaged (I Demand) *	In [A] *

* Un, In - rated values of voltages and currents

6.5.4 Pages configuration mode

For the meter 1...12 user pages can be programmed or selected from 12 manufacturer's default pages. The monitored values are shown in Table 1.
In the options, select the **PAG** mode and confirm your choice by pressing the button ↵.
Buttons ▲ ▼ allow to select the page number to edit, to accept press the button ↵. Buttons ▲ ▼ allow to select the config mode, to accept press the button ↵ . The cursor (blinking ---) will move to the first field **f1**. Buttons ▲ ▼ allow to select the fields f1-f6. Confirm a field selection by pressing the button ↵. Selection of the monitored value in a selected field can be done by pressing the buttons ▲ ▼ and confirmed by pressing the button ↵.
After setting required quantities in the fields f1-f6 make, confirm it and save the pages with the selected quantities by pressing for (approx. 3 sec.) the button ↵ .

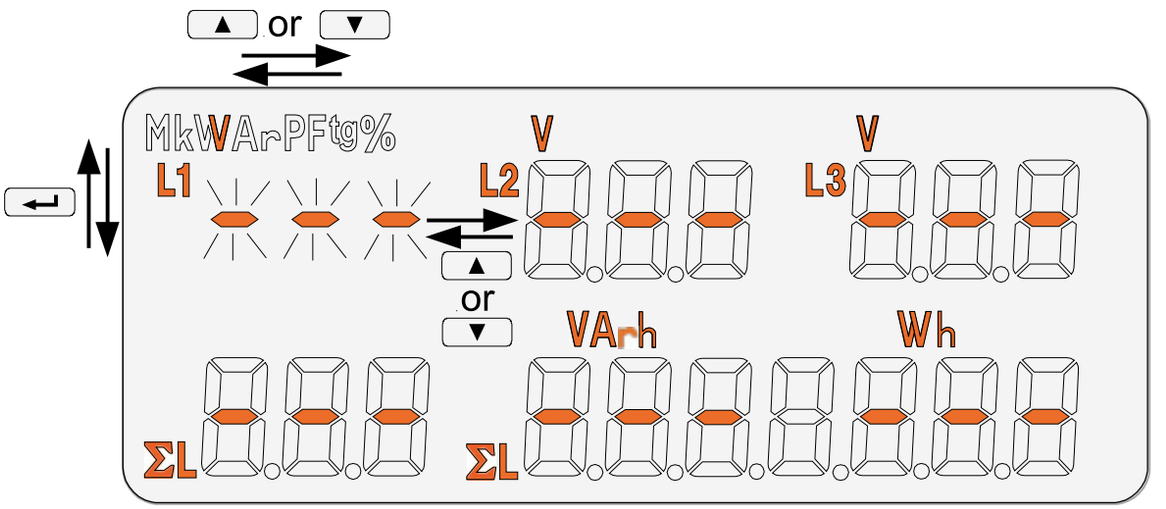

Fig.10 A display in pages configuration mode.

Pages programming

Table 6

Item	Parameter name	Desig-nation	Range	Notes/description	Manu-facturer value
1	Display panel illumi-nation	LCt	oFF,1…60, on	oFF – off, on – on, 1..60 – illumination time (in seconds) from pressing the button	on
2	Page 1	P01	oFF, on, config	oFF– disabled, on – enabled, config – editing a selected page	on
3	Page 2	P02	oFF, on, config	oFF– disabled, on – enabled, config – editing a selected page	on
4	Page 3	P03	oFF, on, config	oFF– disabled, on – enabled, config – editing a selected page	on
5	Page 4	P04	oFF, on, config	oFF– disabled, on – enabled, config – editing a selected page	on

6	Page 5	P05	oFF, on, config	oFF– disabled, on – enabled, config – editing a selected page	on
7	Page 6	P06	oFF, on, config	oFF– disabled, on – enabled, config – editing a selected page	on
8	Page 7	P07	oFF, on, config	oFF– disabled, on – enabled, config – editing a selected page	on
9	Page 8	P08	oFF, on, config	oFF– disabled, on – enabled, config – editing a selected page	on
10	Page 9	P09	oFF, on, config	oFF– disabled, on – enabled, config – editing a selected page	on
11	Page 10	P 10	oFF, on, config	oFF– disabled, on – enabled, config – editing a selected page	on
12	Page 11	P 11	oFF, on, config	oFF– disabled, on – enabled, config – editing a selected page	on
13	Page 12	P 12	oFF, on, config	oFF– disabled, on – enabled, config – editing a selected page	on

Manufacturer settings are shown below:

P01

U1 V	U2 V	U3 V
F	9 VAr	P W

P02

U12 V	U23 V	U31 V
U123 V	9 VAr	P W

P03

I1 A	I2 A	I3 A
I5 A	9 VAr	P W

P04

P1 W	P2 W	P3 W
PF	9 VAr	P W

P05

91 VAr	P2 VAr	P3 VAr
t6	9 VAr	P W

P06

S1 VA	S2 VA	S3 VA
S VA	EnS kVAh	

P07

PF1	PF2	PF3
PF	EnP kWh →	

P08

t61	t62	t63
t6	EnP kWh ←	

P09

tHdU1 %	thdU2 %	thdU3 %
F	En9 kVArh	

P10

thdI1 %	thdI2 %	thdI3
Pdi W	En9 kVArh	

P11

P W	9 VAr	S VA
SdΠ VA	EnP kWh →	

P12

P W	9 VAr	9 VA
IdΠ A	hh_ΠΠ_SS	

Visualization of the manufacturer’s page **P02**:

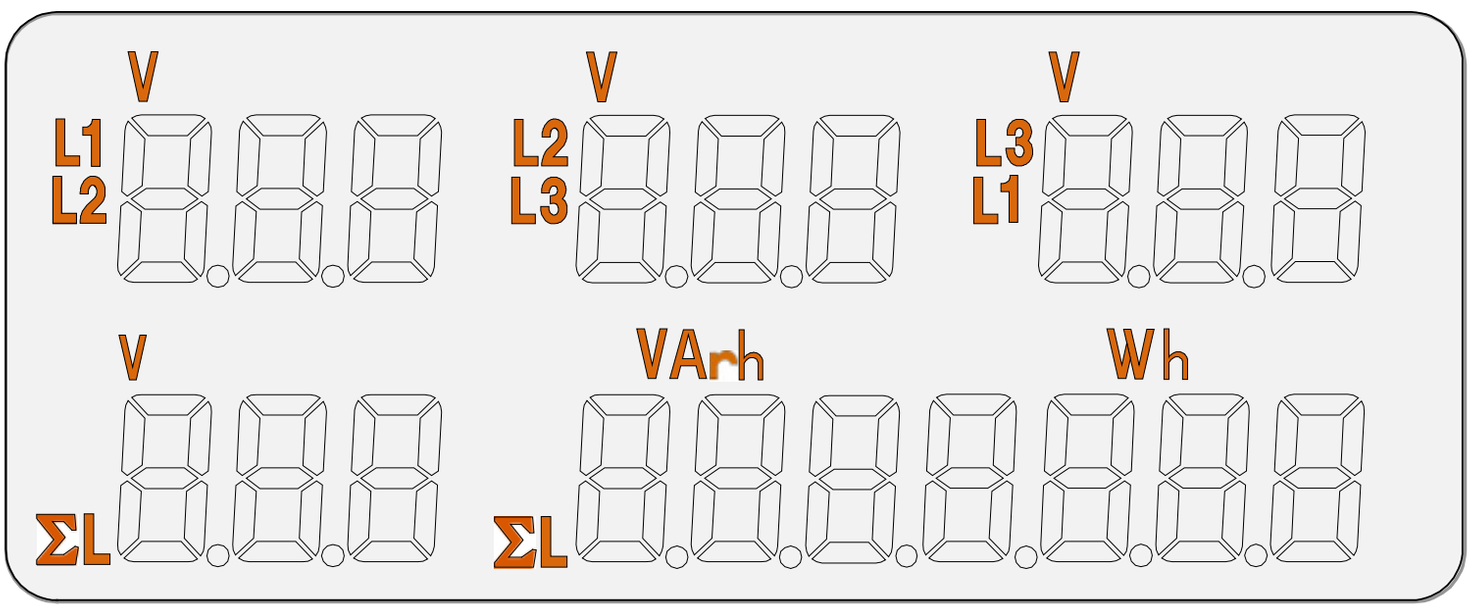

Fig.11 Visualization of the manufacturer’s page P02

7. SOFTWARE UPGRADE

A feature implemented in the N43 meters enables to upgrade firmware using a PC with eCon software installed. Free eCon software and the update files are available at www.lumel.com.pl. Updating can be done directly via USB or RS485 interface using RS485 to USB converter, e.g.: PD10 converter.

a) b)

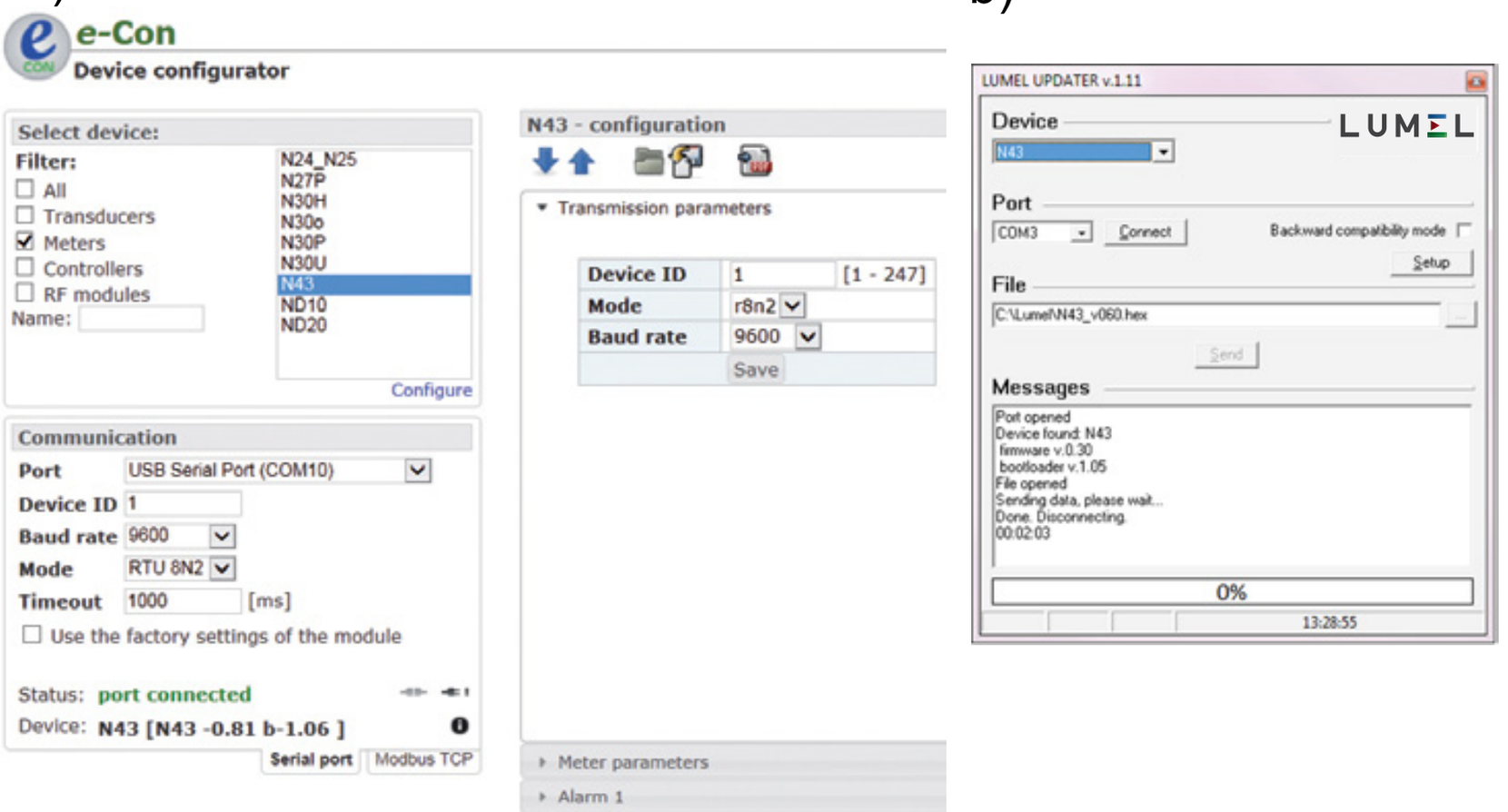

Fig. 12. Program window view: a) eCon, b) software updates

Caution! Software update automatically resets meter settings to manufacturer settings, so it is recommended to save meter settings using eCon software before upgrading.

After launching eCon software, set in the settings required serial port, baud rate, mode and address of the meter. Next, select the N43 meter and click *Config*. Click the down arrow icon to read all of the settings then the disk icon to save the settings to a file (required to restore the settings later). After selecting the option *Update firmware* (in the upper right corner of the screen) the window *Lumel Updater* will be opened (*LU*) – Fig. 12 b. press *Connect*. The *Messages* information window displays information concerning upgrade process. If the port is opened correctly, a *Port opened* message appears. Upgrade mode may be entered using either of the two methods: remotely via *LU* (using eCon settings – address, mode, baud rate, COM port) and by turning a meter on while pressing the button  (while entering bootloader mode using a button, an update is done via USB interface only – baud rate 9600, RTU8N2, address 1). The display will show the bootloader version, while the LU program displays the message *Device found* and the name and version of the connected device. Click the ... button and browse to the meter upgrade file. If the file is opened correctly, a *File*

opened message is displayed. Press the *Send* button. When upgrade is successfully completed, the meter begins normal operation while the information window displays *Done* message and upgrade elapsed time. The next update can only be done via a USB interface in case of a failed upgrade. After the *LU* window is closed, go to parameter group *Restoring manufacturer settings*, select the option and press the button *Apply*. Then press the folder icon to open a previously saved settings file and press the up arrow icon to save the settings in the meter. Current software version can be checked by reading the welcome message when switching the meter on.

Caution! Turning meter supply off during upgrade process may result in permanent damage!

8. SERIAL INTERFACES

8.1 RS-485 INTERFACE – list of parameters

The implemented protocol is compliant with the PI-MBUS-300 Rev G specification of Modicon. List of N43 meter serial interface parameters:

- identifier 0xCF
- meter address 1..247
- baud rate 4.8, 9.6, 19.2, 38.4 kbit/s,
- operating mode Modbus RTU,
- transmission mode 8N2, 8E1, 8O1, 8N1,
- max. response time 600 ms.
- max. no. of registers read in a single query
  - 41 4-byte registers,
  - 82 2-byte registers,
- implemented functions 03, 04, 06, 16, 17,
  - 03, 04 register readout,
  - 06 single register writing,
  - 16 writing of n registers,
  - 17 device identification.

Manufacturer's settings: address 1, baud rate 9.6 kbit/s, mode RTU 8N2,

8.2 USB INTERFACE – list of parameters

USB interface is dedicated only to the configuration of meter parameters.

- identifier 0xCF
- meter address 1
- baud rate 9.6 kbit/s,
- operating mode Modbus RTU,
- transmission mode 8N2
- max. response time 800 ms.
- max. no. of registers read in a single query
  - 41 4-byte registers,
  - 82 2-byte registers,
- implemented functions 03, 04, 06, 16, 17,
  - 03, 04 register readout,
  - 06 single register writing,
  - 16 writing of n registers,
  - 17 device identification.

8.3 Examples of registers' readout and write

Readout of n-registers (code 03h)

Example 1. Readout of two 16-bit integer registers, starting with the register address 0FA0h (4000) - register values 10, 100.

Request:

Device address	Fun-ction	Register address		Number of registers		CRC checksum
		B1	B0	B1	B0	
01	03	0F	A0	00	02	C7 3D

Response:

Device ad-dress	Funcion	Number of bytes	Value from the register 0FA0 (4000)		Value from the register 0FA1 (4001)		CRC check-sum
			B1	B0	B1	B0	
01	03	04	00	0A	00	64	E4 6F

Example 2. Readout of two 32-bit float registers as a combination of two 16-bit registers, starting with the register address 1B58h (7000) - register values 10, 100.

Request:

Device address	Fun-ction	Register address		Number of registers		CRC chceck-sum
		B1	B0	B1	B0	
01	03	1B	58	00	04	C3 3E

Response:

Device address	Function	Number of bytes	Value from the register 1B58 (7000)		Value from the register 1B59 (7001)		Value from the register 1B5A (7002)		Value from the register 1B5B (7003)		CRC chce-ck-sum
			B3	B2	B1	B0	B3	B2	B1	B0	
01	03	08	41	20	00	00	42	C8	00	00	E4 6F

Example 3. Readout of two 32-bit float registers as a combination of two 16-bit registers, starting with the register address 1770h (6000) - register values 10, 100.

Request:

Device address	Fun-ction	Register address		Number of registers		CRC chceck-sum
		B1	B0	B1	B0	
01	03	17	70	00	04	4066

Response:

Device address	Function	Number of bytes	Value from the register 1770h (6000)		Value from the register 1770h (6000)		Value from the register 1772h (6002)		Value from the register 1772h (6002)		CRC chce-ck-sum
			B1	B0	B3	B2	B1	B0	B3	B2	
01	03	08	00	00	41	20	00	00	42	C8	E4 6F

Example 4. Readout of two 32-bit float registers, starting with the register address 1D4Ch (7500) - register values 10, 100.

Request:

Device address	Function	Register address		Number of registers		CRC chceck-sum
		B1	B0	B1	B0	
01	03	1D	4C	00	02	03 B0

Response:

Device address	Function	Number of bytes	Value from the register 1D4C (7500)				Value from the register 1D4D (7501)				CRC chce-ck-sum
			B3	B2	B1	B0	B3	B2	B1	B0	
01	03	08	41	20	00	00	42	C8	00	00	E4 6F

Example 5. Writing the value 543 (0x021F) to the register 4000 (0x0FA0)

Request:

Device address	Function	Register address		Number of registers		CRC chceck-sum
		B1	B0	B1	B0	
01	06	0F	A0	02	1F	CA 54

Response:

Device address	Fun-ction	Register address		Number of registers		CRC chceck-sum
		B1	B0	B1	B0	
01	06	0F	A0	02	1F	CA 54

Writing to n-registers (code 10h)

Example 6. Writing two registers starting with the register address 0FA3h (4003). Writing the values 20, 2000.

Request:

Device address	Function	Address reg.Hi	Adrdess reg.Lo	No. of registers Hi	Number of registers Lo	Number of bytes	Value for the registers 0FA3 (4003)		Value for the registers 0FA4 (4004)		CRC chce-cksum
							B1	B0	B1	B0	
01	10	0F	A3	00	02	04	00	14	07	D0	BB 9A

Response:

Device address	Fun-ction	Register address		Number of registers		CRC chceck-sum
		B1	B0	B1	B0	
01	10	0F	A3	00	02	B2 FE

Device identification report (code 11h)

Example 7. Device identification.

Request:

Device address	Function	CRC chcecksum
01	11	C0 2C

Response:

Device address	Function	Number of bytes	Identifier	Device status	Information field of the device software version (e.g. „-1.00 b-1.06” - N43 device with software version 1.00 and bootloader version 1.06)	CRC chceck-sum
01	11	19	CF	FF	4E 34 33 20 2D 31 2E 30 30 20 20 20 20 20 20 62 2D 31 2E 30 36 20	E0 24

8.4 Map of N43 meter registers

In the N43 meter, data are placed in 16 and 32-bit registers. Process variables and meter parameters are placed in the address area of registers in a way depended on the variable value type. Bits in 16-bit registers are numbered from the youngest to the oldest (b0-b15). 32-bit registers include numbers of float type in IEEE-754 standard. Sequence of 3210 bytes – the oldest is transmitted as the first.

Table 7

Address range	Value type	Description
4000 – 4066	Integer (16 bits)	Value set in the 16-bit register. Registers for meter configuration. Register description is presented in Table 6. Write and readout registers.
4300 - 4386	Integer (16 bits)	Value set in the 16-bit register. Registers for displayed pages configuration. Register description is presented in Table 7. Write and readout registers.
6000 – 6129	Float (2x16 bits)	Value is set in the two following 16-bit registers. These registers contain the same data as 32-bit registers from 7500 – 7564 range. Readout registers. Bit sequence (1-0-3-2).

7000 – 7129	Float (2x16 bits)	Value is set in the two following 16-bit registers. These registers contain the same data as 32-bit registers from 7500 – 7564 range. Readout registers. Bit sequence (3-2-1-0)
7500 – 7564	Float (32 bits)	Value set in the 32-bit register. Register description is presented in Table 8. Readout registers.

Table 8

Register address	Operations	Range	Description	Default
4000	RW	0…30000	Protection - password	0
4001	RW	0	reserved	0
4002	RW	0	reserved	0
4003	RW	0 .. 1	Type of connection 0 - 3Ph/4W 1 - 3Ph/3W	0

4004	RW	0,1	Input range: 1 A or 5 A: 0 - 1 A, 1 - 5 A (for version **In** 1A/5A); 63A: 0 – 63A, 1 -63A (for version **In** 63A);	1
4005	RW	1...10000	Current transformer ratio	1
4006	RW	1...40000	Voltage transformer ratio *10	10
4007	RW	0...2	Averaging time of active power, apparent power and current 0 – 15, 1- 30, 2- 60 minutes	0
4008	RW	0.1	Synchronization with real-time clock: 0 - no synchronization 1 - synchronization with clock	1
4009	RW		reserved	
4010	RW	0…4	Energy counters erasing 0 – no changes, 1- erase active energies, 2 – erase reactive energies, 3 – erase apparent energies, 4 – erase all energies	0

4011	RW	0.1	Erasing averaged parameters P Demand, S Demand, I Demand	0
4012	RW	0.1	Min, max erasing	0
4013	RW	0.1	Erasing alarm signalization latch	0
4014	RW	0.1..42	Alarm output 1 - value on output (code as in Table 5)	38
4015	RW	0...5	Alarm output 1 - type: 0 – n-on, 1– n-oFF, 2 – on, 3 – oFF, 4 – H-on, 5 – H-oFF	0
4016	RW	-1440..0..1440 [‰]	Alarm output 1 - lower value of the alarm switch of the rated input range	900
4017	RW	-1440..0..1440 [‰]	Alarm output 1 - upper value of the alarm switch of the rated input range	1100
4018	RW	3600 s	Alarm output 1 - activation delay	0
4019	RW	3600 s	Alarm output 1 - alarm deactivation delay	0
4020	RW	3600 s	Alarm output 1 - re-activation lock	0

4021	RW	0,1	Alarm 1 signalization latch	0
4022	RW	0.1..42	Alarm output 2 - value on output (code as in Table 5)	28
4023	RW	0..5	Alarm output 2 - type: 0 – n-on, 1– n-oFF, 2 – on, 3 – oFF, 4 – H-on, 5 – H-oFF	0
4024	RW	-1440..0..1440 [$^{o}/_{oo}$]	Alarm output 2 - lower value of the alarm switch of the rated input range	900
4025	RW	-1440..0..1440 [$^{o}/_{oo}$]	Alarm output 2 - upper value of the alarm switch of the rated input range	1100
4026	RW	3600 s	Alarm output 2 - activation delay	0
4027	RW	3600 s	Alarm output 2 - alarm deactivation delay	0
4028	RW	3600 s	Alarm output 2 - re-activation lock	0
4029	RW	0,1	Alarm 2 signalization latch	0
4030	RW	0.1..42	Alarm output 3 - value on output (code as in Table 5)	29

4031	RW	0..5	Alarm output 3 - type: 0 – n-on, 1– n-oFF, 2 – on, 3 – oFF, 4 – H-on, 5 – H-oFF	0
4032	RW	-1440..0..1440[‰]	Alarm output 3 - lower value of the alarm switch of the rated input range	900
4033	RW	-1440..0..1440 [‰]	Alarm output 3 - upper value of the alarm switch of the rated input range	1100
4034	RW	3600 s	Alarm output 3 - activation delay	0
4035	RW	3600 s	Alarm output 3 - alarm deacti-vation delay	0
4036	RW	3600 s	Alarm output 3 - re-activation lock	0
4037	RW	0.1	Alarm 3 signalization latch	0
4038	RW	100…20000	No. of impulses for the impulse output	1000
4039	RW	1..247	MODBUS Network Address	1
4040	RW	0..3	Transmission mode: 0->8n2, 1->8e1, 2->8o1, 3->8n1	0
4041	RW	0..3	Baud rate: 0->4800, 1->9600, 2->19200, 3->38400	1

4042	RW	0,1	Upgrade change of transmis-sion parameters	0
4043	RW	0,1	Standard parameters save (complete with resetting ener-gy as well as min, max and mean power to 0)	0
4044	RW		reserved	-
4045	RW	0...2359	Hour *100 + Minutes	0
4046	RW		reserved	-
4047	RW		reserved	-
4048	R	0..152	Consumed active energy, two older bytes	0
4049	R	0..65535	Consumed active energy, two younger bytes	0
4050	R	0..152	Released active energy, two older bytes	0
4051	R	0..65535	Released active energy, two younger bytes	0
4052	R	0..152	Reactive inductive energy, two older bytes	0
4053	R	0..65535	Reactive inductive energy, two younger bytes	0

4054	R	0..152	Reactive capacity energy, two older bytes	0
4055	R	0..65535	Reactive capacity energy, two younger bytes	0
4056	R	0..152	Apparent energy, two older bytes	0
4057	R	0..65535	Apparent energy, two younger bytes	0
4058	R	0..65535	Status Register 1 – see description below	0
4059	R	0..65535	Status Register 2 – see description below	0
4060	R		reserved	0
4061	R	0..65535	Serial number two older bytes	-
4062	R	0..65535	Serial number two younger bytes	-
4063	R	0..65535	Software version (*100)	-
4064	R		reserved	0
4065	R		reserved	0
4066	R		reserved	0

Energy is made available in hundreds of watt-hours (var-hours) in double 16-bit register, and for this reason, one must divide them by 10 when calculating values of particular energy from registers, e.g.:

Consumed active energy = (reg. value 4038 x 65536 + reg. value 4039) / 10 [kWh]

Released active energy = (reg. value 4040 x 65536 + reg. value 4041) / 10 [kWh]

Reactive inductive energy = (reg. value 4042 x 65536 + reg. value 4043) / 10 [kVarh]

Reactive capacity energy = (reg. value 4044 x 65536 + reg. value 4045) / 10 [kVarh]

Status register of a device (address 4058, R):
Bit 15 – „1” – non-volatile memory damage
Bit 14 – „1” – no calibration or calibration error
Bit 13 – „1” – parameters value error
Bit 12 – „1” – energy value error
Bit 11 – „1” – phase sequence error
Bit 10 – „0” – current range 1 / 5 A~
„1” – current range 63 A~

Bit 9	Bit 8	voltage range
0	0	57.7 V~
0	1	230 V~
1	0	290 V~
1	1	reserved

Bit 7 – „1” – averaging interval has not ended
Bit 6 – „1” – frequency for THD calculation outside ranges:
48 – 52 for 50 Hz,
58 – 62 for 60 Hz
Bit 5 – „1” – voltage too low for measurement of freq.
Bit 4 – „1” – L3 phase voltage too low
Bit 3 – „1” – L2 phase voltage too low
Bit 2 – „1” – L1 phase voltage too low
Bit 1 – „1” – spent battery of RTC
Bit 0 – „1” – reactive 3-phase capacitive energy

Status Register 2 – alarms (address 4059, R):
Bity 15 ... 7 - reserved

Bit 6 – „1” – alarm 3 signalization
Bit 5 – „1” – alarm 2 signalization
Bit 4 – „1” – alarm 1 signalization
Bit 2 – „1” – alarm 3 activated
Bit 1 – „1” – alarm 2 activated
Bit 0 – „1” – alarm 1 activated

Table 9

Register address	Operations	Range	Description	Default
4300	RW	0…61	Display panel illumination: 0 – off, 1-60 – illumination time in seconds from pressing the button, 61 – always on	61
4301	RW	0 .. 60	Time of automatic switch 0...60s 0 – off	0

4302	RW	0...0x0FFF	Enabling page display Bit0 – page 1, Bit1 – page 2, ...	0x0FFF
4303	RW	0, 01..09, 28..33, 35, 38	Page 1 display 1	01
4304	RW	0, 10..18, 28..33, 36, 38	Page 1 display 2	10
4305	RW	0,19..33, 37, 38	Page 1 display 3	19
4306	RW	0, 28..34, 38..41	Page 1 display 4	34
4307	RW	0, 42 .. 45	Page 1 display 5-6	0
4308	RW	0, 28, 30, 31, 38	Page 1 display 5	30
4309	RW	0, 29	Page 1 display 6	29
4310	RW	0, 01..09, 28..33, 35, 38	Page 2 display 1	35
4311	RW	0, 10..18, 28..33, 36, 38	Page 2 display 2	36
4312	RW	0,19..33, 37, 38	Page 2 display 3	37
4313	RW	0, 28..34, 38..41	Page 2 display 4	38
4314	RW	0, 42 .. 45	Page 2 display 5-6	0
4315	RW	0, 28, 30, 31, 38	Page 2 display 5	30

4316	RW	0, 29	Page 2 display 6	29
4317	RW	0, 01..09, 28..33, 35, 38	Page 3 display 1	02
4317	RW	0, 01..09, 28..33, 35, 38	Page 3 display 1	02
4318	RW	0, 10..18, 28..33, 36, 38	Page 3display 2	11
4319	RW	00,19..33, 37, 38	Page 3 display 3	20
4320	RW	00, 28..34, 38..41	Page 3 display 4	28
4321	RW	0, 42 .. 45	Page 3 display 5-6	0
4322	RW	00, 28, 30, 31, 38	Page 3 display 5	30
4323	RW	00, 29	Page 3 display 6	29
4324	RW	00, 01..09, 28..33, 35, 38	Page 4 display 1	03
4325	RW	00, 10..18, 28..33, 36, 38	Page 4 display 2	12
4326	RW	00,19..33, 37, 38	Page 4 display 3	21
4327	RW	00, 28..34, 38..41	Page 4 display 4	32
4328	RW	0, 42 .. 45	Page 4 display 5-6	0
4329	RW	00, 28, 30, 31, 38	Page 4 display 5	30

4330	RW	00, 29	Page 4 display 6	29
4331	RW	00, 01..09, 28..33, 35, 38	Page 5 display 1	04
4332	RW	00, 10..18, 28..33, 36, 38	Page 5 display 2	13
4333	RW	00,19..33, 37, 38	Page 5 display 3	22
4334	RW	00, 28..34, 38..41	Page 5 display 4	33
4335	RW	0, 42 .. 45	Page 5 display 5-6	0
4336	RW	00, 28, 30, 31, 38	Page 5 display 5	30
4337	RW	00, 29	Page 5 display 6	29
4338	RW	00, 01..09, 28..33, 35, 38	Page 6 display 1	05
4339	RW	00, 10..18, 28..33, 36, 38	Page 6 display 2	14
4340	RW	00,19..33, 37, 38	Page 6 display 3	23
4341	RW	00, 28..34, 38..41	Page 6 display 4	31
4342	RW	0, 42 .. 45	Page 6 display 5-6	46
4343	RW	00, 28, 30, 31, 38	Page 6 display 5	0
4344	RW	00, 29	Page 6 display 6	0

4345	RW	00, 01..09, 28..33, 35, 38	Page 7 display 1	06
4346	RW	00, 10..18, 28..33, 36, 38	Page 7 display 2	15
4347	RW	00,19..33, 37, 38	Page 7 display 3	24
4348	RW	00, 28..34, 38..41	Page 7 display 4	32
4349	RW	0, 42 .. 45	Page 7 display 5-6	42
4350	RW	00, 28, 30, 31, 38	Page 7 display 5	0
4351	RW	00, 29	Page 7 display 6	0
4352	RW	00, 01..09, 28..33, 35, 38	Page 8 display 1	07
4353	RW	00, 10..18, 28..33, 36, 38	Page 8 display 2	16
4354	RW	00,19..33, 37, 38	Page 8 display 3	25
4355	RW	00, 28..34, 38..41	Page 8 display 4	33
4356	RW	0, 42 .. 45	Page 8 display 5-6	43
4357	RW	00, 28, 30, 31, 38	Page 8 display 5	0
4358	RW	00, 29	Page 8 display 6	0
4359	RW	00, 01..09, 28..33, 35, 38	Page 9 display 1	08

4360	RW	00, 10..18, 28..33, 36, 38	Page 9 display 2	17
4361	RW	00,19..33, 37, 38	Page 9 display 3	26
4362	RW	00, 28..34, 38..41	Page 9 display 4	34
4363	RW	0, 42 .. 45	Page 9 display 5-6	44
4364	RW	00, 28, 30, 31, 38	Page 9 display 5	0
4365	RW	00, 29	Page 9 display 6	0
4366	RW	00, 01..09, 28..33, 35, 38	Page 10 display 1	09
4367	RW	00, 01..09, 28..33, 35, 38	Page 10 display 2	18
4368	RW	00,19..33, 37, 38	Page 10 display 3	27
4369	RW	00, 28..34, 38..41	Page 10 display 4	39
4370	RW	0, 42 .. 45	Page 10 display 5-6	45
4371	RW	00, 28, 30, 31, 38	Page 10 display 5	0
4372	RW	00, 29	Page 10 display 6	0
4373	RW	00, 01..09, 28..33, 35, 38	Page 11 display 1	29
4374	RW	00, 01..09, 28..33, 35, 38	Page 11 display 2	30

4375	RW	00,19..33, 37, 38	Page 11 display 3	31
4376	RW	00, 28..34, 38..41	Page 11 display 4	40
4377	RW	0, 42 .. 45	Page 11 display 5-6	42
4378	RW	00, 28, 30, 31, 38	Page 11 display 5	0
4379	RW	00, 29	Page 11 display 6	0
4380	RW	00, 01..09, 28..33, 35, 38	Page 12 display 1	29
4381	RW	00, 01..09, 28..33, 35, 38	Page 12 display 2	30
4382	RW	00,19..33, 37, 38	Page 12 display 3	31
4383	RW	00, 28..34, 38..41	Page 12 display 4	41
4384	RW	0, 42 .. 45	Page 12 display 5-6	47
4385	RW	00, 28, 30, 31, 38	Page 12 display 5	0
4386	RW	00, 29	Page 12 display 6	0

Table 10

16-bit register address	32-bit register address	Operations	Description	Unit	3Ph/4W	3Ph/3W
6000/7000	7500	R	L1 phase voltage	V	√	x
6002/7002	7501	R	L1 phase current	A	√	√
6004/7004	7502	R	L1 phase active power	W	√	x
6006/7006	7503	R	L1 phase reactive power	VAr	√	x
6008/7008	7504	R	L1 phase apparent power	VA	√	x
6010/7010	7505	R	L1 phase active power factor (PF1=P1/S1)	-	√	x
6012/7012	7506	R	tgφ factor of L1 phase (tg1 =Q1/P1)	-	√	x
6014/7014	7507	R	THD U1	V / %	√	x
6016/7016	7508	R	THD I1	A / %	√	x
6018/7018	7509	R	L2 phase voltage	V	√	x
6020/7020	7510	R	L2 phase current	A	√	√

6022/7022	7511	R	L2 phase active power	W	√	x
6024/7024	7512	R	L2 phase reactive power	VAr	√	x
6026/7026	7513	R	L2 phase apparent power	VA	√	x
6028/7028	7514	R	L2 phase active power factor (PF2=P2/S2)	-	√	x
6030/7030	7515	R	tgφ factor of L2 phase (tg2 =Q2/P2)	-	√	x
6032/7032	7516	R	THD U2	V / %	√	x
6034/7034	7517	R	THD I2	A / %	√	x
6036/7036	7518	R	L3 phase voltage	V	√	x
6038/7038	7519	R	L3 phase current	A	√	√
6040/7040	7520	R	L3 phase active power	W	√	x
6042/7042	7521	R	L3 phase reactive power	VAr	√	x
6044/7044	7522	R	L3 phase apparent power	VA	√	x
6046/7046	7523	R	L3 phase active power factor (PF3=P3/S3)	-	√	x
6048/7048	7524	R	tgφ factor of L3 phase (tg3 =Q3/P3)	-	√	x
6050/7050	7525	R	THD U3	V / %	√	x

6052/7052	7526	R	THD I3	A / %	√	x
6054/7054	7527	R	Mean 3-phase voltage	V	√	x
6056/7056	7528	R	Mean 3-phase current	A	√	√
6058/7058	7529	R	3-phase active power (P1+P2+P3)	W	√	√
6060/7060	7530	R	3-phase reactive power (Q1+Q2+Q3)	VAr	√	√
6062/7062	7531	R	3-phase apparent power (S1+S2+S3)	VA	√	√
6064/7064	7532	R	3-phase active power factor (PF=P/S)	-	√	√
6066/7066	7533	R	mean tgφ factor for 3 phases (tg=Q/P)	-	√	√
6068/7068	7534	R	Frequency	F	√	√
6070/7070	7535	R	Phase-to-phase voltage L_{1-2}	V	√	√
6072/7072	7536	R	Phase-to-phase voltage L_{2-3}	V	√	√
6074/7074	7537	R	Phase-to-phase voltage L_{3-1}	V	√	√
6076/7076	7538	R	Mean phase-to-phase voltage	V	√	√

6078/7078	7539	R	active power averaged (P Demand)	W	√	√
6080/7080	7540	R	apparent power averaged (S Demand)	VA	√	√
6082/7082	7541	R	current averaged (I Demand)	A	√	√
6084/7084	7542	R	THD U mean 3-phase	V / %	√	x
6086/7086	7543	R	THD I mean 3-phase	A / %	√	x
6088/7088	7544	R	Neutral wire current (calculated from vectors)	A	√	x
6090/7090	7545	R	Active 3-phase input energy (no. of register 7546 overflows, resets to 0 after reaching 99999.9 MWh)	100 MWh	√	√
6092/7092	7546	R	Active 3-phase input energy (counter counting up to 99999.9 kWh)	kWh	√	√
6094/7094	7547	R	Active 3-phase output energy (no. of register 7548 overflows, resets to 0 after reaching 99999.9 MWh)	100 MWh	√	√
6096/7096	7548	R	Active 3-phase output energy (counter counting up to 99999.9 kWh)	kWh	√	√
6098/7098	7549	R	Reactive 3-phase inductive energy (no. of register 7550 overflows, resets to 0 after reaching 99999.9 MVArh).	100 MVArh	√	√
6100/7100	7550	R	Reactive 3-phase inductive energy (counter counting up to 99999.9 kVArh)	kVArh	√	√

6102/7102	7551	R	Reactive 3-phase capacity energy (no. of register 7552 overflows, resets to 0 after reaching 99999.9 MVArh)	100 MVArh	√	√
6104/7104	7552	R	Reactive 3-phase capacity energy (counter counting up to 99999.9 kVArh)	kVArh	√	√
6106/7106	7553	R	Apparent energy (no. of register 7554 overflows, resets to 0 after reaching 99999.9 MVAh)	100 MVAh	√	√
6108/7108	7554	R	Apparent energy (counter counting up to 99999.9 kVAh)	kVAh	√	√
6110/7110	7555	R	Time – seconds	-	√	√
6112/7112	7556	R	Time – hours, minutes	-	√	√
6114/7114	7557	R	Reserved	-	√	√
6116/7116	7558	R	Reserved	-	√	√
6120/7118	7559	R	Mean 3-phase current (max)	A	√	√
6120/7120	7560	R	Max 3-phase voltage phase / phase-to--phase for 3PH-4 – 3-phase, 4-wire - max phase for 3PH-3 – 3-phase, 3-wire - max phase-to-phase	V	√	√
6122/7122	7561	R	Active power averaged (P Demand) min	W	√	√
6124/7124	7562	R	Active power averaged (P Demand) max	W	√	√
6126/7126	7563	R	Apparent power averaged (S Demand) max	VA	√	√
6128/7128	7564	R	Current averaged (I Demand) max	A	√	√

In case of exceeding (measuring value is out of the measuring range) the value 1e20 is set.

9. ERROR CODES

During the meter operation the error messages may be displayed. Following list shows reasons of errors.

- **Er1** – if too low voltage or current during measurement:
  - PFi, $tg\varphi_i$,$THDU_i$, less than 10% U_n,
  - PFi, $tg\varphi_i$, less than 0,2% I_n,
  - $THDI_i$, less than 10% I_n,

- **Er2** – during THD measurement, when frequency value is outside 48 – 52 Hz range for 50 Hz and 58 – 62 for 60 Hz;
- **Err bat** – displayed when the battery of the internal RTC clock is used up. The measurement is carried out after switching the supply on and every day at midnight. You can disable the message by the push-button ↵. The disabled message remains inactive till the renewed switching of the meter on.
- **Err CAL, Err EE** – displayed when the meter memory is damaged. A meter should be sent back to the manufacturer.

- **Err PAr** – incorrect operational parameters of the meter. In such case a meter should be set to manufacturer settings (from menu or via RS-485 interface). Message can be disabled by pressing ↵ .

- - - - – exceedance. Measuring value is out of the measuring range.

10. ACCESSORIES

For the N43 meters you can order:
USB CABLE A/miniUSB - 1m BLACK;
Order code 1126-271-028.

11. TECHNICAL DATA

Measuring ranges and permissible basic errors

Table 11

Measured value	Measuring range	L1	L2	L3	Σ	Basic error**
Current In 1 A~ 5 A~ 63 A~	0.002 ...1.20 A or kA * 0.010 ... 6.00 A or kA * 0.10 ... 76.0A~	●	●	●		±0.5 %
Voltage L-N 57,7 V~ 230 V~ 290 V~	2.80 ..70.0 V or kV* 10.0 .. 276 V~ 14.0 .. 348 V~	●	●	●		±0.5 %
Voltage L-L 100 V~ 400 V~ 500 V~	5.00 .. 120 V or kV* 20.0 .. 480 V~ 25.0 .. 600 V~	●	●	●		±1 %
Frequency	47.0 .. 63.0 Hz				●	±0.5 %
Active power /consumed or exported/	0.00 .. 999 W, kW or MW	●	●	●	●	±1 %
Reactive power /capacity or inductive/	0.00 .. 999 VAr, kVAr lub MVAr	●	●	●	●	±1 %
Apparent power	0.00 .. 999 VA, kVA or MVA	●	●	●	●	±1 %

Active energy /consumed or exported/	0.0 .. 99999.9 kWh or MWh				●	±1 %
Reactive energy /capacity or inductive/	0.0 .. 999999.9 kVArh or MVArh	●	●	●	●	±1 %
Apparent energy	0.0 .. 999999.9 kVAh or MVAh				●	±1 %
Active power factor PF	-1 ... 0 ... 1	●	●	●	●	±1 %
Tangent φ	-1.2 ... 0 ...1.2	●	●	●	●	±1 %

* Depending on the setting of trU (voltage transformer ratio: 0.1 ... 4000.0) and trI (current transformer ratio: 1 ... 10000)

** Calculated for the nominal range In, Un

Power consumption:

- in current circuit ≤ 4 VA
- in voltage circuit ≤ 0.05 VA
- in current circuit ≤ 2.00 VA

Readout field dedicated 3.5” LCD display,

Relay outputs	**3 x** relays, volt-free NO contacts load capacity 0,5 A 250 V AC; 1 A 30 V DC;
Serial interface	**RS485**: address 1..247 mode: 8N2, 8E1, 8O1,8N1 baud rate: 4.8, 9.6, 19.2, 38.4 kbit/s transmission protocol: Modbus RTU maximum time to start the response: 600 ms **USB**: 1.1/2.0, address 1, mode 8N2; baud rate 9.6 kbit/s, transmission protocol: Modbus RTU maximum time to start the response: 800 ms, USB wire length ≤ 3 m
Energy pulse output	OC (NPN) output, class A passive, compliant with EN 62053-31; supply voltage 18...27 V, current 10...27 mA

Pulsing constant of OC output

5000 - 20000 pulses/kWh for In=1A/5 A independently of set tr_U, tr_I;
100 – 1000 pulses/kWh for In=63 A

Terminals

	direct connection (63 A)	**indirect connection (1/5 A)**
Diameter		
solid-core wire	2.5 ... 16 mm²	0.2 ... 5.3 mm²
stranded wire	4 ... 16 mm²	0.2 ... 5.3 mm²
Clamping screws	M5	M3.5
Tightening torque	1.2 ... 2.0 Nm	1.0 Nm

Protection grade of the housing

from the front	IP 50
from terminals side	IP 00

Weight	0.3 kg
Dimensions	105 x 110 x 60 mm

Reference and rated operating conditions:

- supply voltage	85..253 V a.c. (40...400) Hz or 90..300 V d.c. 20..40 V a.c. (40...400) Hz lub 20..60 V d.c.
- input signal:	0 ... 0.002..1.2I_n; 0.05...1.2U_n for current, voltage 0...0.002...1.2I_n; 0...0.1...1.2U_n; for factors PF_i ,$t\varphi_i$ frequency 47...63 Hz; sinusoidal (THD ≤ 8%)
- power factor	-1...0...1
- ambient temperature	-10..23..+55°C
- storage temperature	-20...+70°C
- humidity	0...95 % (inadmissible condensation)
- max peak factor:	
- current	2
- voltage	2

- external magnetic field 0...40...400 A/m
- short-term overload

voltage inputs	5 sec.	2 Un
voltage inputs	1 sec.	50 A /version **In** 1A/5 A /
	1 sec.	630 A /version **In** 63 A /

- working position any
- warm-up time 5 min.

Real time clock battery: CR2032

Additional errors:

in % of the basic error

- from ambient temperature changes < 50 % / 10°C
- for THD > 8% < 100 %

Test voltages:

- supply and alarm outputs 2.1 kV d.c.

- voltage and current inputs 3.2 kV d.c.
- USB, RS-485 and OC outputs 0.7 kV d.c.

Standards fulfilled by the meter:

Electromagnetic compatibility:

- noise immunity acc. to EN 61000-6-2
- noise emission acc. to EN 61000-6-4

Safety requirements:

acc. to EN 61010-1 standard

- isolation between circuits: basic,
- installation category III (for voltages above 300 V – category II)
- pollution grade 2,
- maximum phase-to-earth operating voltage:
  - for supply circuits and relay outputs 300 V
  - for measuring input 300 V – cat III (600 V – cat II)
  - for circuits RS-485, USB, pulse output: 50 V
- altitude a.s.l. < 2000m.

12. ORDERING CODE

N43 network parameters meter ordering code.

Table 12

N43 -	X	X	X	XX	X	X
Current input In:						
1 A/5 A (X/1; X/5)	**1**					
63 A	**2**					
Voltage input (phase/ phase-to-phase) Un:						
3 x 57.7/100 V		**1**				
3 x 230/400 V		**2**				
3 x 290/500 V		**3**				
Auxiliary supply:						
85...253 V a.c., 90...300 V d.c.			**1**			
20...40 V a.c., 20...60 V d.c.			**2**			
Version:						
standard				**00**		
custom-made*				**XX**		
Language:						
Polish					**P**	
English					**E**	
other*					**X**	
Acceptance tests:						
without extra quality requirements						**0**
with an extra quality inspection certificate						**1**
acc. to customer's request*						**X**

* -after agreeing with the manufacturer

EXAMPLE OF ORDER:

The code **N43 - 2 2 1 00 E 0** means:

N43 - meter of network parameters of N43 type
2 - current input: 63 A
2 - input voltage (phase/phase-to-phase)
Un = 3 x 230 V/ 400 V
1 - auxiliary supply: 85...253 V a.c., 90...300 V d.c.
00 - standard version
E - all descriptions and user's manual in English
0 - without extra quality requirements.

LUMEL
EVERYTHING COUNTS

LUMEL S.A.
ul. Słubicka 1, 65-127 Zielona Góra, POLAND
tel.: +48 68 45 75 100, fax +48 68 45 75 508
www.lumel.com.pl

Export department:
tel.: (+48 68) 45 75 139, 45 75 233, 45 75 321, 45 75 386
fax.: (+48 68) 32 54 091
e-mail: export@lumel.com.pl

N43-09A