EUROTEC
TECNOLOGIE IMPIANTISTICHE - AUTOMAZIONE - TELECONTROLLO

LUMEL
EVERYTHING COUNTS

DIGITAL PANEL METER
N30O

USER'S MANUAL

CE

Contents

1. APPLICATION AND METER DESIGN 5
2. METER SET.....6
3. BASIC REQUIREMENTS, OPERATIONAL SAFETY 7
4. INSTALLATION.....8
5. SERVICE 12
6. RS-485 INTERFACE 36
7. SOFTWARE UPDATING.....50
8. ERROR CODES 52
9. TECHNICAL DATA 53
10. PROGRAMMING EXAMPLES 56
11. ORDER CODES 58
12. MAINTENANCE AND GUARANTEE.....60

1. APPLICATION AND METER DESIGN

The programmable digital panel meter N30O is destined for measurements: number of pulses, frequency, period, worktime, encoder position. Additionally, the meter enables the indication of the current time. The readout field is a LED display, which allows the exposition in colours: red, green and orange. The measured input signal can be arbitrary converted by means of mathematic functions and/or a 21-point individual characteristic.

Features of the N30O Meter:

- display colour individually programmed in three ranges,
- programmable thresholds of displayed overflows,
- 2 NOC relay alarms operating in 6 modes,
- 2 switched relay alarms with a switching contact operating in 6 modes (option),
- signaling of measuring range overflow,
- automatic setting of the decimal point,
- programming of alarms and analog outputs with the reaction on the selected input quantity (main or auxiliary input),
- additional counter input,
- control inputs of the main input work, additional or both simultaneously,
- signaling of additional input state,
- possible control of counter operation by means of the meter keyboard,
- automatic reset of counters at the set point value
- real-time clock with the function of the clock supply support in case of the meter supply decay,
- programmed averaging time – function of walking window with the averaging time up to 1 hour,
- monitoring of set parameter values,
- locking of introduced parameters by means of a password,
- mathematic functions for measured value calculation,
- recount of the measured quantity on the base of the 21-point individual characteristic,

- interface with MODBUS protocol in the RTU mode (option),
- firmware updating by RS485 interface (option)
- conversion of the measured value into a standard – programmable current or voltage signal (option),
- highlight of any measuring unit acc. to the order.
- signaling of alarm operation – switching the alarm on causes the highlight of the output number,
- galvanic separation of pulse inputs between them,
- galvanic separation between terminals: alarm, supply, input, analog output, auxiliary supply, RS-485 interface.

Protection grade from frontal side: IP65

Meter overall dimensions: 96 x 48 x 93 mm (with terminals).

The meter casing is made of plastic.

Fig. 1 View of the N30O Digital Meter

2. METER SET

The set is composed of:

- N30O meter..... 1 pc
- user's manual..... 1 pc
- guarantee card ..... 1 pc
- set of clamps to fix in the panel ..... 4 pcs
- seal..... 1 pc

When unpacking the meter, please check whether the type and option code on the data plate correspond to the order.

3. BASIC REQUIREMENTS, OPERATIONAL SAFETY

In the safety service scope, the N30O meter meets the requirements of the EN 61010-1 standard.

Mentioned below applied symbols mean:

- especially important, one must acquaint with this information before connecting the meter. The non-observance of notices marked by this symbol can occasion injures of the personnel and a damage of the instrument.

- one must take note of this when the instrument is working inconsistently to the expectations. Possible consequences if disregarded.

Observations concerning the operational safety

- All operations concerning transport, installation, and commissioning as well as maintenance, must be carried out by qualified, skilled personnel, and national regulations for the prevention of accidents must be observed.
- Before switching the meter on, one must check the correctness of connections.
- The meter is designed to be installed and exploited in electromagnetic industrial environment conditions.
- When connecting the supply, one must remember that a switch or a circuit-breaker should be installed in the building. This switch should be located near the device, easy accessible by the operator, and suitably marked as an element switching the meter off.
- Non-authorized removal of the housing, inappropriate use, incorrect installation or operation, creates the risk of injury to personnel or meter damage.

For more detailed information, please study the User's Manual.

4. INSTALLATION

The meter has separable strips with screw terminals, what enables the connection of external wires of 1.5 mm^2 cross-section for input signals and 2.5 mm^2 for other signals.

One must prepare a hole of $92^{+0,6} \times 45^{+0,6}$ mm in the panel, which the thickness should not exceed 6 mm.

The meter must be introduced from the panel front with disconnected supply voltage. Before the insertion into the panel, one must check the correct placement of the seal. After the insertion into the hole, fix the meter by means of clamps (fig. 2).

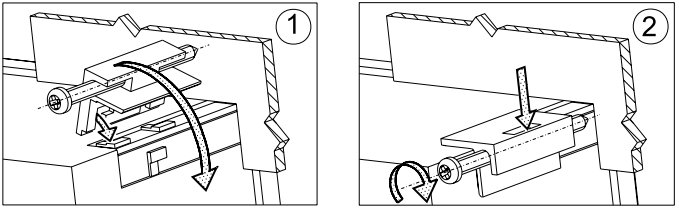

Fig. 2. Meter Fixing

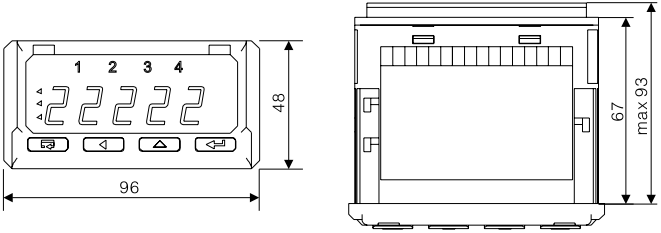

Fig. 3. Overall Dimensions

4.1. Lead-out of Signals

Signals led out on the meter connectors are presented on the fig. 4. All input signals are separated between them and separated from other circuits. Circuits of successive groups of signals are separated between them.

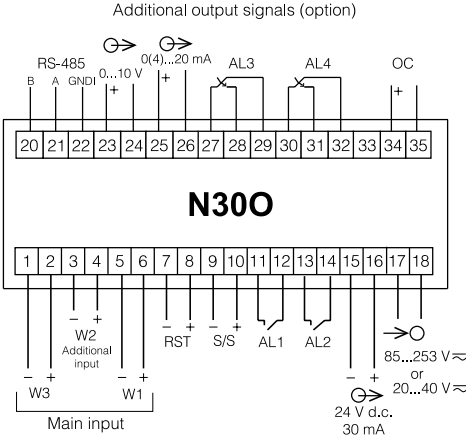

Fig. 4. Description of Signals on Connection Strips

Clamps	Description	Clamps	Description
1-2	W3- Main input. Counting of pulses downwards.	11-12	alarm output 1, relay
3-4	W2 - Additional input. Auxiliary counter.	13-14	alarm output 2, relay
5-6	W1- Main input. Counting of pulses upwards/ work time.	15-16	24 V external transducer supply output
7-8	RST- Reset input (reset) of the main counter or/and auxiliary counter. The function is available after switching in the meter menu on.	17-18	supply
9-10	S/S – start/stop of counting. The function is available after switching in the meter menu on.	20-21-22	RS-485 output
		23-24	analog output 1, voltage
		25-26	analog output 1, current
		27-28-29	alarm output 3, relay
		30-31-32	alarm output 4, relay
		34-35	OC – open collector output of npn type– signaling of the range overflow.

4.2. Examples of Connections

An example of a N30O meter and a inductive sensor connection with an output of NPN and PNP type is presented on the fig. 5. The way to connect a transducer with an output of contactron/relay type is presented on the fig. 6. In examples, the connection of the main input W1 is shown. Other inputs are connected in the same way but we must remember, that all inputs are galvanically separated between them and have a system limiting the input current. The range of voltages controlling the input should be in the 5..24 V d.c. range.

a)

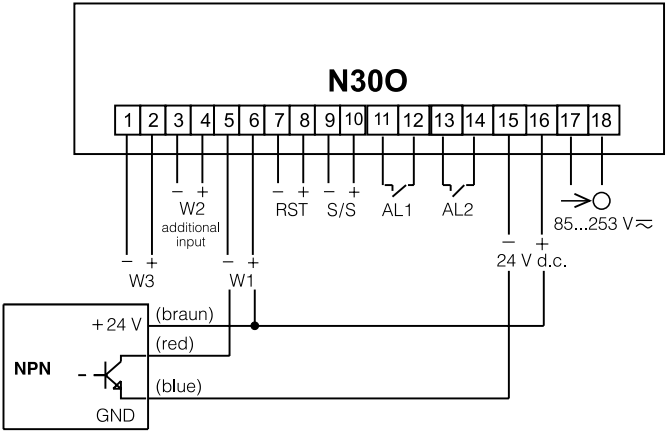

b)

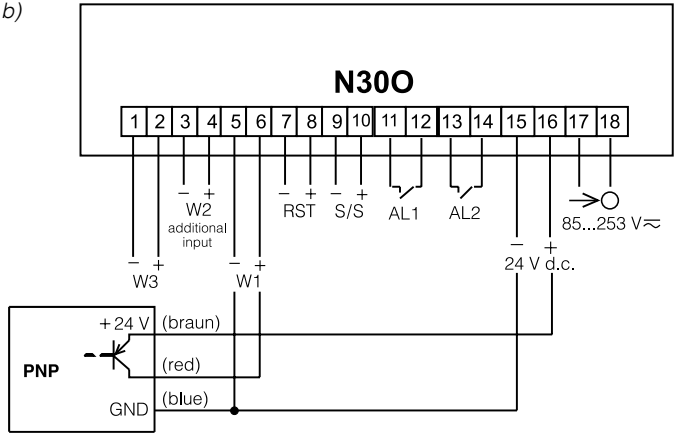

Fig. 5. Connection of the sensor with the OC Output:
a) NPN Type b) PNP Type.

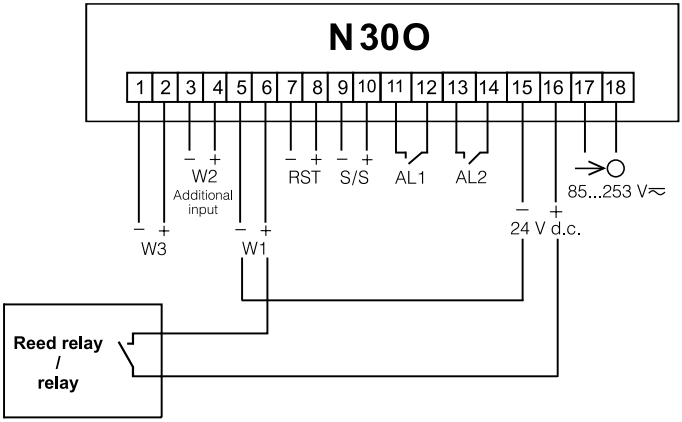

Fig. 6. Connection of the sensor with the Reed Relay/ Relay Output Type

5. SERVICE

5.1. Display Description

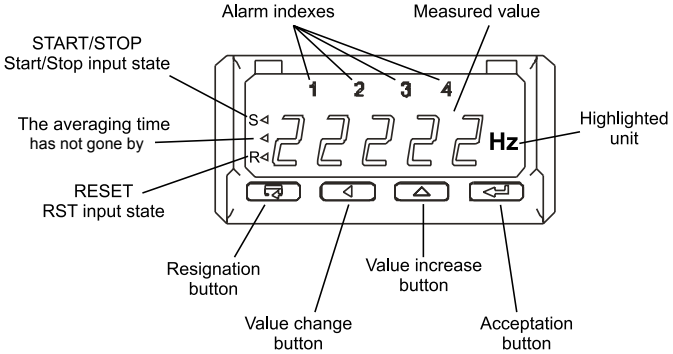

Fig. 7. Description of the Meter Frontal Plate

5.2. Messages after Switching the Supply on

After switching the supply on, the meter displays the meter name N30O and next, the program version in the shape „ x.xx" – where x.xx is the number of the current program version or the number of a custom-made option. Next, the meter carries out measurements and displays the value of the input signal. The meter sets up automatically the decimal point position when displaying the value. The format (number of places after the decimal point) can be limited by the user.

5.3. Functions of Buttons

[↵] - Acceptation button:

⇒ entry in programming mode (press and hold down ca 3 seconds),

⇒ moving through the menu – choice of level,
⇒ entry in the mode changing the parameter value,
⇒ acceptation of the changed parameter value,
⇒ stop the measurement – when holding down the button, the result on the display is not updated.
The measurement is still carried out.

[▲] - button increasing the value:

⇒ display of maximal value, The pressure of the button causes the display of the maximal value during ca 3 seconds,
⇒ entry in the level of the parameter group,
⇒ moving through the selected level,
⇒ change of the selected parameter value – increasing the value.

[◀] - button changing the digit:

⇒ display of minimal value, The pressure of the button causes the display of the minimal value during ca 3 seconds,
⇒ entry in the level of parameter group,
⇒ moving through the selected level,
⇒ change of selected parameter value – shift on the next digit,

[↩] - resignation button:

⇒ entry in the menu monitoring the meter parameters (by holding down ca 3 seconds),
⇒ exit from the menu monitoring meter parameters,
⇒ resignation of the parameter change,
⇒ absolute exit from the programming mode (holding down ca 3 seconds).

The pressure of the [↩] [↵] button combination and holding them down ca 3 seconds causes the erasing of alarm signaling. This operation acts only when the support function is switched on.
The pressure of the [↩] [◀] button combination causes the era-

sing of the minimal value.

The pressure of the [↩] [▲] button combination causes the erasing of the maximal value.

The pressure of the [◀] [▲] button combination causes the display of the second counter contents. A longer holding down (longer than 3 seconds) causes the reset of the main counter (if the service of counters from the keyboard is switched on). The auxiliary counter is reset only from the **Inp2** counter.

The pressure of the [◀] [↵] button combination longer than 3 seconds causes counting stop (for pulse counter and work time counter mode), in case when the button function is on.

The pressure of the [▲] [↵] button combination longer than 3 seconds causes count start (for pulse counter and work time counter mode), in case when the button function is on.

The pressure and holding down the [↵] button during 3 seconds causes the entry to the programming matrix. The programming matrix can be proteced wit security code.

The pressure and holding down the [↩] button during 3 seconds causes the entry to the menu monitoring meter parameters . One must move through the monitoring menu by means of [◀] and [▲] buttons. In this menu, all programmable meter parameters are only available for readout. In this mode, the menu **Ser** is not available. The exit from the monitoring menu is carried out by means of the [↩] button. In the monitoring menu, parameter symbols are displayed alternately with their values.

The service algorithm of the meter is presented on the fig. 8.

5.4. Programming

The pressure of the [↵] button and holding it down through ca 3 seconds causes the entry in the programming matrix. If the entry is protected by a password, then the safety code symbol **SEC** is displayed alternately with the set up value **0**. The write of the correct code causes

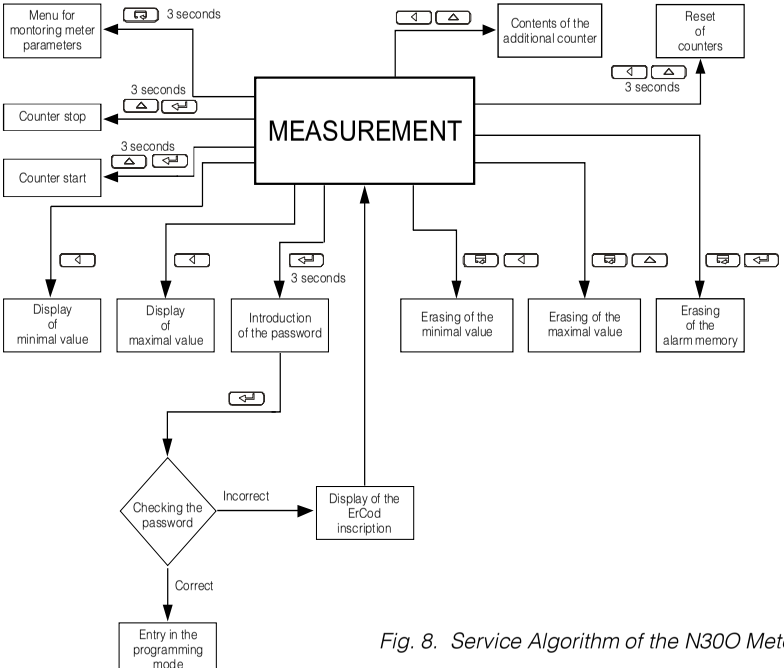

Fig. 8. Service Algorithm of the N30O Meter

Item											
1	**Inp 1** Para-meters of main input	**tYP1** Type of Measured quantity	**SCAL1** Choice of method to convert Input quantity	**ConS1** Constant to convert the input quantity	**t_L1** Miinimal Time of low pulse level duration	**t_H1** Maximal time of upper pulse level duration	**E_In1** Permit for external functions	**Auto1** Automatic reset of counters	**Cnt1** Measure-ment time	**FUnCt** Mathe-matic fun-ctions	**-----**
2	**Inp 2** Para-meters of auxiliary input	**Cntr2** Contents of auxiliary input	**SCAL2** Choice of metod to rescale Input quantities	**ConS2** Constant rescaling Input quantity	**t_L2** Minimal Time of low pulse level duration	**t_H2** Maximal time of upper pulse level duration	**E_In2** Permit for external function	**Auto2** Automatic reset of counters	**CLr2** Cancel the counter	**-----**	
3	**Ind** Para-meters of individ. Charact.	**IndCp** Number of points of Individ. charact.	**H1** First point of the Individ. oharact. Point x.	**Y1** First point of the Individ. Charact. Point x.	**...**	**H21** Last point of the characte-ristic	**Y21** Last point of the charac-teristic	**-----**			
4	**dISP** Display parame-ters	**d_P** Miinimal decimal point	**coldo** Lower colour	**colbe** Middle colour	**colup** Upper colour	**colLo** Lower threshold of colour change	**colHi** Upper threshold of colour change	**ovrLo** Lower overflow	**ovrHi** Upper overflow	**-----**	
5	**ALr1** Alarm 1	**P_A1** Tyoe of Input quantity for alarm 1	**PrL1** Lower threshold	**PrH1** Upper threshold	**tYP1** Alarm type	**dLY1** Alarm delay	**LED1** Signaling support	**-----**			

6	**ALr2** Alarm 2	**P_A2** Tyoe of Input quantity for alarm 2	**PrL2** Lower threshold	**PrH2** Upper threshold	**tYP2** Alarm type	**dLY2** Alarm delay	**LED2** Signaling support	**-----**	
7	**ALr3** Alarm 3	**P_A3** Tyoe of input quantity for alarm 3	**PrL3** Lower threshold	**PrH3** Upper threshold	**tYP3** Alarm type	**dLY3** Alarm delay	**LED3** Signaling support	**-----**	
8	**ALr4** Alarm 4	**P_A4** Tyoe of Input quantity for alarm 4	**PrL4** Lower threshold	**PrH4** Upper threshold	**tYP4** Alarm type	**dLY4** Alarm delay	**LED4** Signalling support	**-----**	
9	**Out** Outputs	**P_An** Type of quantity for the analog output	**AnI** Lower threshold for the analog output	**AnH** Upper threshold for the analog output	**typ_A** Kind of output (volt/ current)	**bAud** Baud rate	**prot** Kind of frame	**addr** Device address	**-----**
10	**SEr** Service	**Set** Write standard parame-ters	**SEC** Introduce the password	**Hour** Setup of the time	**unIt** Highligth the unit	**tESt** Display test	**-----**		

Fig. 9. Programming Matrix.

the entry in the matrix, the write of an incorrect code causes the display of the **ErCod** symbol. The matrix of transitions into the programming mode is presented on the fig. 9. The selection of the level is made by means of the [↵] button, however the entry and moving through the parameters of the chosen level is carried out by means of [◀] and [▲] buttons. Parameter symbols are displayed alternately with their current values. In order to change the value of the selected parameter, one must use the [↵] button. To resign from the change, one must use the [↩] button. In order to exit from the selected level, one must chose the **-----** symbol and press the [↵] button. To exit from the programming matrix, one must press the [↩] -button during ca 1 second. Then, the inscription **End** appears for ca 3 seconds and the meter displays the measured value. In case of leaving the meter in the parameter programming mode, the automatic abandon of the programming mode parameter (parameter, next the menu) follows after 30 seconds and the meter displays the measured value.

5.4.1. Value Change Way of the Chosen Parameter

In order to increase the value of the selected parameter, one must press the [▲] button. A single pressure of the button, causes the increase of the value of 1. The increase of value when displaying the digit 9 causes the setting of 0 on this digit. The change of the digit follows after pressing the [◀] button.

In order to accept the set up parameter, one must hold down the [↵] button. Then, the write of the parameter and the display of its symbol follows alternately with the new value. The pressure of the [↩] button during the change of the parameter value will cause the resignation of the write.

5.4.2. Changing Floating-Point Values

The change is carried out in two stages (the transition to the next stage follows after pressing the [↵] button):

1) setting the value from the range -19999...99999, similarly as for integral values;

2) setting of the decimal point position (00000., 0000.0, 000.00, 00.000, 0.0000); the [◀] button shifts the decimal point to the left, however the [▲] button shifts the decimal point to the right;

The pressure of the [↵] button during the change of the parameter value will cause the resignation of the write.

Table 1

InP 1		
Parameter symbol	**Description**	**Range of changes**
tYP1	Selection of measured value	**Cntr** – number of pulses **FrEqL** – frequency for (f < 10 kHz) **FrEqH** – frequency for (f > 10 kHz) **tACH** – rotational speed **PEr** – period **PErH** – long period > 10 s. **CntH** – worktime counter. **Hour** – current time **Enc** – incremental encoder
SCAL1	Selection of input quantity rescaling. Measured value is multiplied or divided by the set point value (parameter **ConS**).	**And** – multiplication by the constant **diu** – division by the constant
ConS1	Constant rescaling the input quantity. The write of a negative value causes the counting down (mode of pulse counter and worktime counter).	**-19999...99999**
t_L1	Minimal duration time of the low level pulse on the main input. The introduction of a value lower than 0.25 or 5 causes the switching of the length control function of the low signal level off. The value is given in milliseconds.	**0...60000**

Table 1

t_H1	Minimal duration time of the high level pulse on the main input. The introduction of a value lower than 0.25 or 5 causes the switching of the length control function of the high signal level off. The value is given in milliseconds. Parameters t_L1 and t_H1 define the maximal frequency value. (minimal signal period = t_L1+t_H1 + 0,2s).	**0...60000**
E_In1	Permit for external functions: start/stop, erasing. Taken into consideration only in counter modes: pulse counter and worktime counter. The meter counts only by the passed high level signal on the input W1 near external functions switch on the worktime counter.	**bUt** – External functio switched off. Access to functions only from the level of meter buttons. **In** – functions switched off. External functions switched on. Access by means of buttons is switched off. **bUtIn** – External functions switched on. Access by means of buttons and additional inputs. Higher priority have external inputs. The option of the counter erasing is available from the keyboard level.
Auto1	In the counter working modes, the counter value is automatically erased after reaching this value. The write of the value 0 switches the function off. In the working mode of low frequency measurement, speed, periods, it is the time in seconds of the measurement duration (waiting for the pulse).	**-19999...99999**
Cnt1	The measurement time is expressed in seconds. The result on the display presents the mean value counted in the Cnt1 period. This parameter is not taken into consideration during the measurement in counter modes.	**1...3600**

FUnCt	Mathematic function. On the measured value is carry out additionaly a chosen mathematic operation. Then this value is rescaling by individual characteristic.	**oFF** – lack of mathematic operation **sqr** – (measured value)^2 **sqrt** – √measured value **Inv** – 1/measured value **InvSq** – (1/measured value)^2 **InvSt** – √1/measured value

Table 2

InP 2		
Parameter symbol	**Description**	**Range of changes**
Cntr2	Current value of the auxiliary counter	**-19999...99999**
SCAL2	Choice of rescaling input quantity for the auxiliary input. The measured value is multiplied or divided by the set point value. (parameter **ConS2**).	**And** – multiplication by the constant. **diu** – division by the constant.
ConS2	Constant rescaling the input quantity. The write of a negative value causes the counting downward.	**-19999...99999**
t_L2	Minimal duration time of the low level pulse on the auxiliary input. The introduction of a value lower than 0.25 causes the switching of the length control function of the low signal level off. The value is given in milliseconds	**0...60000**
t_H2	Minimal duration time of the high level pulse on the auxiliary input. The introduction of a value lower than 0.25 causes the switching of the length control function of the high signal level off. The value is given in milliseconds Parameters t_L2 and t_H2 define the maximal frequency value. (minimal signal period = t_L2+t_H2 + 0,2s).	**0...60000**

E_In2	Permit for external functions: start/stop, erasing	**On** – Control inputs steers the work of the auxiliary counter. **Off** – Control inputs do not influence the auxiliary counter work.
Auto2	The counter is automatically erased after reaching this value. The write of the value 0 switches the function off.	**-19999...99999**
CLr2	Erase the counter contents. The choice of the option **Y** causes the rewrite of the value Auto2 to the counter and the transition of the function in the state **n**.	**nO** – Do not erase, **YeS** – Erase the counter, **AUtO2** – rewrite value of AUtO2 to aux counter

Table 3

Ind		
Parameter symbol	**Description**	**Range of changes**
IndCp	Number of points of the individual characteristic. For a value lower than 2, the individual characteristic is switched off. The number of segments is the number of points reduced of one. In CountH and HoUr modes, the individual characteristic is not taken into consideration.	**1...21**
Xn	Point value for which we will expect Yn (n-point number)	**-19999...99999**
Yn	Expected value for Xn.	**-19999...99999**

Table 4

dISP		
Parameter symbol	**Description**	**Range of changes**
d_P	Minimal position of the decimal point when displaying the measured value - display format. This parameter is not taken into consideration during the modes CountH and HoUr.	**0.0000 – 0** **00.000 – 1** **000.00 – 2** **0000.0 – 3** **00000 – 4**
CoLdo	Display colour, when the displayed value is ower than CoLLo	**rEd – red** **grEEn – green** **orAnG - orange**
CoLbE	Display colour, when the displayed value is higher than CoLLo and lower than CoLHi	
CoLuP	Display colour when the displayed value is higher than CoLHi	
CoLLo	Lower threshold of colour change	**-19999..99999**
CoLHi	Upper threshold of colour change	**-19999..99999**
ovrLo	Overflow of lower value of the measuring range value or the programmed indication range is signaled on the display by the _ _ _ _ _ symbol.	**-19999..99999**
ovrHi	Overflow of upper value of the measuring range value or the programmed indication range is signaled on the display by the _ _ _ _ _ symbol.	**-19999..99999**

Table 5

ALr1, ALr2, ALr3, ALr4		
Parameter symbol	**Description**	**Range of changes**
P_A1 **P_A2** **P_A3** **P_A4**	Input quantity, steering the alarm.	**InP1** – Main input (indicated value). **InP2** – input of the auxillary counter.
PrL1 **PrL2** **PrL3** **PrL4**	Alarm lower threshold.	**-19999...99999**
PrH1 **PrH2** **PrH3** **PrH4**	Alarm upper threshold.	**-19999...99999**
tYP1 **tYP2** **tYP3** **tYP4**	Alarm type. Fig. 12 presents the graphical imaging of alarm types	**n-on** – normal (transition from 0 to 1), **n-oFF** – normal (transition from 1 to 0), **on** - switched on, **oFF** – switched off, **H-on** – manually switched on; till the change time of the alarm type, the alarm output remains switched on for good **H-oFF** – manually switched off; till the change time of the alarm type the output alarm remains switched off for good.

Table 5

dLY1 **dLY2** **dLY3** **dLY4**	Delay of alarm switching (time of delay by alarm switching on and switching off.	**0...900**
LEd1 **LEd2** **LEd3** **LEd4**	Support of alarm signaling. In the situation when the support function is switched on, after the alarm state retrea, the signaling diode is not blanked. It signals the alarm state till its blanking moment by means of the [↩] [↵] push-button combination. This function concerns only and exclusively the alarm signaling, thus relay contacts will operate without support according to the chosen type of alarm.	**oFF** – function switched off **on** – function switched on

Table 6

out		
Parameter symbol	**Description**	**Range of changes**
P_An	Input quantity, on which the analog output has to react.	**InP1** – main input (indicated value). **InP2** – input of the auxillary counter.
AnL	Lower threshold of the analog output. One must give the value, on which we want to obtain the minimal value of signal on the analog output.	**-19999...99999**
AnH	Upper threshold of the analog output. give the value on which we want to obtain the maximal value of signal on the analog output (10 V or 20 mA).	**-19999...99999**
tyPA	Type of analog output	**0_10U** – voltage 0...10 V **0_20A** – current 0...20 mA **4_20A** – current 4...20 mA
bAud	Baud rate of the RS-485 interface	**4.8** – 4800 bit/s **9.6** – 9600 bit/s **19.2** – 19200 bit/s **38.4** – 38400 bit/s **57.6** – 57600 bit/s **115.2** – 115200 bit/s
prot	Type of transmission frame of the RS-485 interface.	**r8n2** **r8E1** **r8o1** **r8n1**
Addr	Address in the MODBUS network. The write of the value 0 switches the interface off.	**0...247**

Table 7

SEr		
Parameter symbol	**Description**	**Range of changes**
SEt	Write in manufacturer's settings. The setup of the value YES causes the write of standard parameters into the meter. Values of manufacturer's parameters are presented in the table 9.	**no** – do nothing. **YeS** – causes the write of manufacturer's settings.
SEC	Introduction of a new password. The introduction of the value 0 switches the password off.	**0...60000**
HOUR	Setting of the current time. The introduction of a wrong time cancels the introduction of time. The introduced value will not taken.	**0.00...23.59**
unIt	Highlighting of the unit.	**On** – unit highlighting switched on. **Off** – unit highlighting switched off.
tESt	Display test. The test consists in a successive lighting up of digital display segments. Alarm diodes and unit backlighting diodes should be lighted.	**YeS** – causes the test start The pressure of the button ends the test. **no** – do nothing.

The modes of the work of the main input W1/W3 and additional input W2 taken down in table 8 . The input W3 is auxiliary input of main used only in the counter and encoder mode. The additional input W2 works only as the counter of impulses. The crossing value AUTO in the counter encoder and worktime mode cause automatic erasing the counter. In the mode: the measurement of the frequency (f < 10kHz), rotational speed, period, inscription of the value from the range of the time measurement, the time of duration of the single measurement reduces. For the value AUTO from behind the measuring range, as the time of the measurement is accepted the longest time of the measurement. Automatic erasing in dependence from the counting mode according to the table 8a. When the measured value is increase and value AUTO is larger than the zero, then after the crossing AUTO is measured value reset. However when the measured value is reduced and the zero will cross, then the measure value is placed on AUTO.

Table 8

Mode		Functions of measuring inputs of main input		Measure-ment of minimal pulse dura-tion time	Automatic cancellation, external functions. Reset from keyboard.	Individual charac-teristic/ mathematic functions	Multiplica-tion/ division by the con-stant (SCAL, ConS)	Measu-rement averaging. Walking window	Measurement time of the signal in seconds (AUTO 1)
Symbol	Description	W1	W3						
Cntr1, Cntr2	Pulse counter	Counting of pulses upwards[4]	Counting of pulses downwards[4]	+[1]	+	+	+	–	The crossing the value AUTO will cause automatic erasing
FrEqL	Measurement of frequency (f < 10kHz)	Measuring input	Not used	+[2]	–	+	+	+	Signal measure time in sec. [3] 0,5 – 20
FreqH	Measurement of frquency (f > 10kHz)	Measuring input	Not used	–	–	+	+	+	–
IACH	Measurement of rotational speed	Measuring input	Not used	+[2]	–	+	+	+	Signal measure time in sec. [3] 0,5 – 20
PEr	Measurement of period (t < 11s)	Measuring input	Not used	+[2]	–	+	+	+	Signal measure time in sec. [3] 0,5 – 11
PErH	Measurement of period (10s < t < 3600s)	Measuring input	Not used	+[2]	–	+	+	+	Signal measure time in sec. [3] 0,5 – 3600
CntH	Worktime counter	Counting of worktime upwards[5]	Not used	–	+	–	–	–	The crossing the value AUTO will cause automatic erasing

HoUr	Current time	Not used	Not used	–	–	–	–	–	–
EnC	Measurement of encoder position	Measuring input	Mount pulses up for WE3 = 1 Count down for WE3 = 0	+[1]	+	+	+	–	The crossing the value AUTO will cause automatic erasing

[1] The measurement of the minimum times of duration of impulses is checked when both times t_L and t_H are ≥0,25 ms
[2] The measurement of the minimum times of duration of impulses is checked when both times t_L and t_H are ≥ 5 ms
[3] The setting AUTO1 to a value, which is out of range shown in the table will result in setting upper value of the range as the time of the measurement
[4] When ConS1 < 0 pulse counting direction are reverse.
[5] You should give the signal on W1 to counting the time of the work near turned on external functions. For ConS1 < 0 the worktime counter count down

Table 8a

Inputs and worktime counters parameters		The value of counters after reset / Worktime value after reset, In mode measurement worktime for main counter
Value CONS1, CONS2	Value AUTO1, AUTO2	
CONSn > 0	AUTOn ≥ 0	0
CONSn > 0	AUTOn < 0	AUTOn
CONSn < 0	AUTOn > 0	AUTOn
CONSn < 0	AUTOn ≤ 0	0

5.4.4 Individual Characteristic

N30O meters can recount the measured value into any value thanks to the implemented individual characteristic function. The individual characteristic causes rescale of the measured value for the expected indication range vaule. The way of the individual characteristic interaction on the meter operation has been presented on the fig.10.

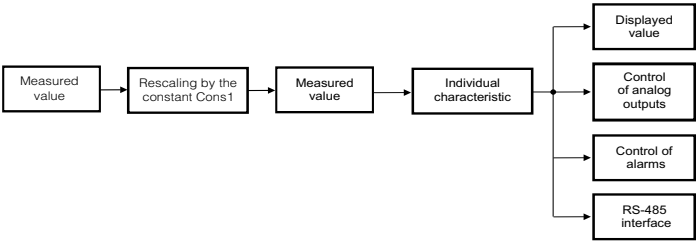

Fig. 10. Action of the Individual Characteristic

The user can introduce maximally twenty functions through the given points defining intervals with expected values (fig.11).

The programming of the individual characteristic consists in the definition of the number of points which the input function will be linearized by. One must remember, that the number of linearizing functions is of one less than the number of points. Next, one must program successive points by giving the measured value (Hi) and the expected value corresponding to it, – value which has to be displayed (Yi) (where i – number of the successive point, $0 < i < n$).

The graphic interpretation of the individual characteristic is presented on the fig. 11.

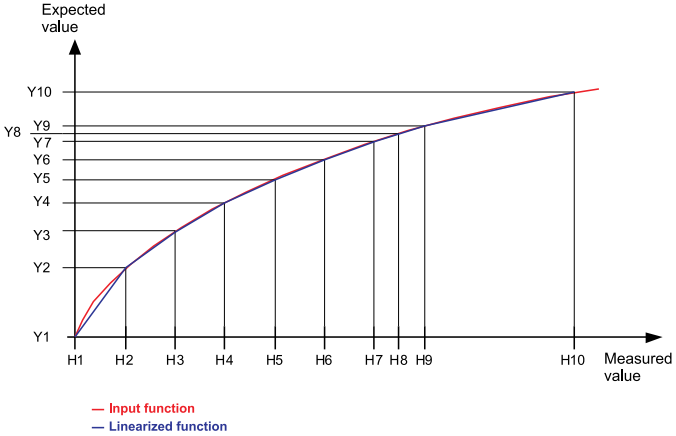

Fig. 11. Individual Characteristic

During the function approximation, one must remember that for the approximation of functions strongly differing from the linear characteristic, higher the number of linearizing segments, smaller the error related to the linearization.

If measured values are smallest from H1 then, recalculations will be made on the base of the first straight line calculated on the base of points (H1, Y1) and (H2, Y2). However, for values higher than Hn (where n < 22 – the last declared measured value) the value to display will be calculated on the base of the last assigned linear function.

Note: All introduced points of the measured value (Hn) must be arranged in the increasing sequence, such to preserve the following dependence:

$$H1 < H2 < H3 ... < Hn$$

If the above is not fulfilled, the individual characteristic function will be automatically switched off (will not be realized) and a diagnostic flag will be set up in the status register.

5.4.5. Alarm Types

The N30O meter is equipped with 2 alarm outputs with NOC contact (make contact) and two alarm outputs with NOC/NCC contact (make and break contact) (option). Each of alarms can work in one of the six modes. The work of alarms in modes is presented in the fig. 12: n-on, n-off, on, off. Two remaining modes: h-on and h-off mean suitably, always switched on and always switched off. These modes are destined for the manually simulation of alarm states.

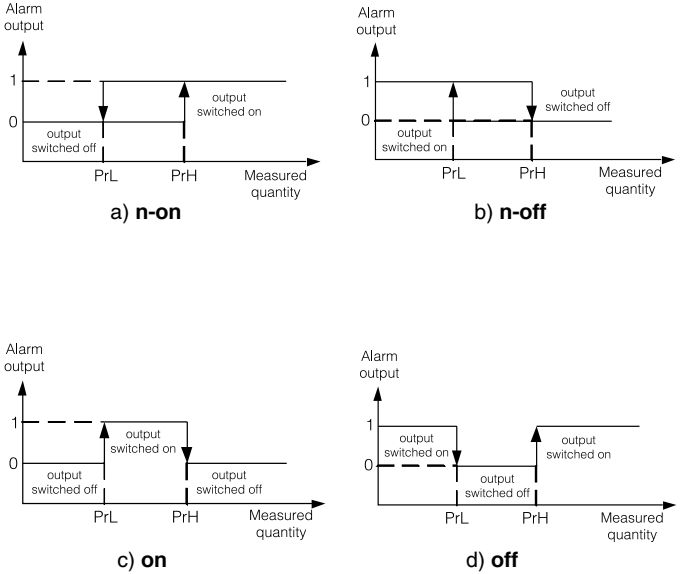

Fig. 12. Alarm types: a) n-on, b) n-off c) on d) off.

Caution !

- In case of alarms of **n-on**, **n-off**, **on**, **off** types, the write of **PrL > PrH** will cause the alarm switching off.
- In case of a measuring range overflow, the reaction of relays is compatible with written **PrL**, **PrH**, **tYP** parameters. In spite of the displayed overflow, the meter still carries out the measurement.
- The meter controls currently the value of the introduced parameter at the moment. In case when the introduced value overflows the upper change range given in the table 1, the meter will make automatically the change into the maximal value. Similarly, in case when the introduced value overflows the lower change range given in the table 1, the meter will make automatically the change into the minimal value.

5.4.6 Display Format

The N30O meter adapts automatically the display format (precision) to the value of measured quantity. So that the function could be fully used, one must choose the format **0.0000**, then the meter will display the measured value with the possible highest accuracy. This function does not operate for the time display, where the format is set up automatically. The current time (mode HOUr) is displayed in the 24 hours' format, in the hh.mm shape, where hh – current hour, and mm – current minute. During the worktime measurement (mode CntH) the format is adapted to the measured value. Formats of worktime displays are presented below:

- h.mm.ss – for a number of hours less than10.
- hhh.mm – for a number of hours higher/equal than10 and less than 1000.
- hhhhh – for a number of hours higher than 1000.

Where: h – number of hours; m – number of minutes;
s – number of seconds.

5.5. Manufacturer's Parameters

Standard settings of the N30O meter are presented in the table 9. These settings can be restored by means of the meter menu through the choice of the option **Set** from the menu **Ser**.

Table 9

Parameter symbol	Level in matrix	Standard value
tYP1	1	Cntr
SCAL1	1	dIu
ConS1	1	1
t_L1	1	0
t_H1	1	0
E_In1	1	but
AUto1	1	99999
Cnt1	1	1
FUnCt	1	OFF
Cntr2	2	0
SCAL2	2	dIv
ConS2	2	1
t_L2	2	0
t_H2	2	0
E_In2	2	OFF
AUto2	2	99999
CLr2	2	no
IndCP	3	no
H0	3	0
Y0	3	0
H1	3	100
Y1	3	100
...	...	...
Hn	3	(n-1)*100
Yn	3	(n-1)*100

d_P	4	00000
CoLdo	4	grEEn
CoLbE	4	orAng
CoLuP	4	rEd
CoLLo	4	5000
CoLHi	4	8000
ovrLo	4	-19999
ovrHi	4	99999
P_A1, P_A2, P_A3, P_A4	5, 6, 7, 8	InP1
tYP1, tYP2, tYP3, tYP4,	5, 6, 7, 8	h-off
PrL1, PrL2, PrL3, PrL4	5, 6, 7, 8	1000
PrH1, PrH2, PrH3, PrH4	5, 6, 7, 8	2000
dLY1, dLY2, dLY3, dLY4	5, 6, 7, 8	0
LEd1, LEd2, LEd3, LEd4	5, 6, 7, 8	oFF
P_An	9	InP1
tYPA	9	0_10U
AnL	9	0
AnH	9	99999
bAud	9	9.6
prot	9	r8n2
Addr	9	1
SEt	10	no
SEC	10	0
HOUR	10	Not defined
unIt	10	off
tESt	10	off

6. INTERFACE RS-485

N30O programmable digital meters have serial interface in RS-485 standards for the communication in computer systems and with other devices fulfilling Master function. An asynchronous communication character protocol MODBUS has been implemented. The transmission protocol describes ways of information between devices through the serial interface.

6.1. Connection Way of the Serial Interface

The RS-485 standard allows to a direct communication of 32 devices on a single serial link of 1200 m long (at baud rate 9600 b/s). For the connection of a higher quantity of devices, it is necessary to apply additional intermediate-separating systems (e.g. PD51 converter).

The lead of the interface line is presented on the Fig. 4. To obtain a correct transmission, it is necessary to connect lines A and B in parallel with their equivalents in other devices. The connection must be made through a shielded wire. The wire shield must be connected to the protection terminal in the nearest possible proximity of the meter (connect

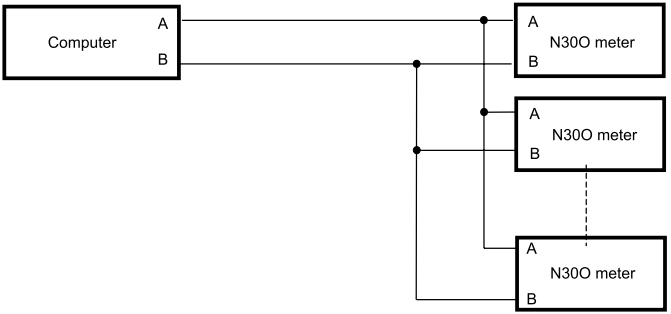

Fig. 13. Connection Way of the RS-485 Interface

the shield only to a single point of the protection terminal).

The GND line serves to the additional protection of the interface line at long connections. Then, one must connect GND signals of all devices on the RS-485 bus.

To obtain the connection with the computer, a RS-485 interface card or a suitable converter is indispensable, e.g. PD51 or PD10.

The connection way of devices is shown on the fig. 13.

The designation of transmission lines for the card in the PC computer depends on the card producer.

6.2. Description of the MODBUS Protocol Implementation

The implemented protocol is in accordance with the PI-MBUS-300 Rev G of Modicon Company specification.

Set of the serial protocol parameters of N30O meters in MODBUS protocol:

- meter address — 1...247,
- baud rate — 4800, 9600, 19200, 38400, 57600, 115200 bit/s,
- work mode — RTU with a frame in format 8n2, 8e1, 8o1, 8n1,
- maximal response time — 100 ms.

The parameter configuration of the serial interface consists in the settlement of the baud rate (**bAUd** parameter), device address (**Addr** parameter), and the format of the information unit (**prot.** parameter)

Notice:

Each meter connected to the communication network must have:

- unique address, different from addresses of other devices connected to the network,
- identical baud rate and type of information unit.

6.3 Description of Applied Functions

Following functions of the MODBUS protocol have been implemented in the N30O meter:

- 03 – Readout of n-registers.
- 04 – Readout of one register.
- 06 – Write register
- 16 – Write of n-registers.
- 17 – Identification of the slave device.

6.4 Register Map

In N30O meter data are stored in the 16- and 32-bit registers. Process variables and meter parameters are placed in the address area of registers in a manner dependent on the type of the value of the variable. The bits in the 16-bit register are numbered from the youngest to the oldest (b0-b15). 32-bit registers include numbers of float type in the IEEE-754 stanard.

Notice: All given addresses are physical addresses. In some computer programs, logic addressing is applied, then addresses must be increased of 1.

Table 10

Range of addresses	Value type	Description
4000-4049	integer (16 bits)	Value placed in a 16-bit register.
6000-6019	float (32 bits)	Value placed in two successive 16-bit registers. Registers include the same data as 32-bit register from the area 7500. Registers are only for readout. Byte order 1-0-3-2.
6200-6327	float (32 bits)	Value placed in two successive 16-bit registers. Registers include the same data as 32-bit register from the area 7600. Registers can be read out and written. Byte order 3-2-1-0.
7000-7019	float (32 bits)	Value placed in two successive 16-bit registers. Registers include the same data as 32-bit register from the area 7500. Registers are only for readout. Byte order 3-2-1-0.
7200-7327	float (32 bits)	Value placed in two successive 16-bit registers. Registers include the same data as 32-bit register from the area 7600. Registers can be read out and written. Byte order 3-2-1-0.
7500-7509	float (32 bits)	Value placed in a 32-bit register. Registers are only for readout.
7600-7663	float (32 bits)	Value placed in a 32-bit register. Registers can be read out and written.

6.5. Registers for Write and Readout

Table 11

Values placed in 16-bit registers	Symbol	Write (w)/Readout (r)	Range	Description	
4000	**tYP1**	w/r	0...7	Input type	
				Value	
				0	Pulse counter
				1	Frequency (f < 10 kHz)
				2	Frequency (f > 10 kHz)
				3	Rotational speed
				4	Period
				5	Long period
				6	Worktime counter
				7	Current time
				8	Incremental encoder
4001	**SCAL1**	w/r	0, 1	Selection of input quantity recalibration	
				Value	**Description**
				0	Multiplication by the constant
				1	Division by the constant
4002	**E_In1**	w/r	0...2	Permit for external functions Start/Stop. Erasing	
				Value	**Description**
				0	External functions switched off. Access to functions from the keyboard level
				1	External functions switched on. Access by means of buttons switched off
				2	External functions switched on. Access by means of the keyboard and control inputs.
4003	**Cnt1**	w/r	1...3600	Averaged measurement time expressed in seconds. This time defines the averaging time of the measured value. The displayed value is the mean value calculated from the Cnt1 period.	

4004	**SCAL2**	w/r	0, 1	Selection of input quantity recalibration	
				Value	**Description**
				0	Multiplication by the constant
				1	Division by the constant
4005	**E_In2**	w/r	0, 1	Permit for external functions	
				Value	**Description**
				0	External functions does not influence the auxiliary counter work.
				1	External functions control the auxiliary counter work.
4006	**FUnCt**	w/r	0...5	Mathematic function carried out on a measured value.	
				Value	**Description**
				0	switched off
				1	$(\text{measured value})^2$
				2	$\sqrt{\text{measured value}}$
				3	1/measured value
				4	$(1/\text{measured value})^2$
				5	$\sqrt{1/\text{measured value}}$
4007	**CLr**	w/r		Erase the auxiliary counter. The write of the value 1 into the register causes the erasing of the auxiliary counter. The write of the value 2 causes the erasing of the main counter . The write of the value 3 causes the erasing of the main and auxiliary counters.	
4008	**IndCp**	w/r	1...21	Number of points of the individual characteristic. For the value 1, the individual characteristic is switched off. Segments of the individual characteristic are defined by parameters Xn and Yn, where n – point number.	
4009	**d_P**	w/r	0...4	Minimal position of the decimal point when displaying the measured value.	
				Value	**Description**
				0	0.0000
				1	00.000

				2	000.00
				3	0000.0
				4	00000
4010	**CoLdo**	w/r	0...2	Display colour when the displayed value is lover than **coLLo**	
				Value	**Description**
				0	red
				1	green
				2	orange
4011	**CoLbE**	w/r	0...2	Display colour when the displayed value is higher than **CoLLo** and lower than **CoLHi**	
				Value	**Description**
				0	red
				1	green
				2	orange
4012	**CoLUp**	w/r	0...2	Display colour when the displayed value is higher than **CoLHi**	
				Value	**Description**
				0	red
				1	green
				2	orange
4013	**P_a1**	w/r	0, 1	Input quantity controlling the alarm	
				Value	**Description**
				0	Main input
				1	Auxiliary input
4014	**tyP1**	w/r	0...5	Type of alarm 1 (description – fig. 12)	
				Value	**Description**
				0	n-on
				1	n-off
				2	on
				3	off
				4	h-on
				5	h-off

4015	**dLY1**	w/r	0...900	Delay of alarm 1 switch on and off (in seconds)	
4016	**LEd1**	w/r	0...1	Support of alarm 1 signaling	
				Value	**Description**
				0	Suport turned off
				1	Suport turned on
4017	**P_a2**	w/r	0, 1	Input quantity controlling the alarm	
				Value	**Description**
				0	Main input
				1	Auxiliary input
4018	**tyP2**	w/r	0...5	Type of alarm 2 (description – fig. 12)	
				Value	**Description**
				0	n-on
				1	n-off
				2	on
				3	off
				4	h-on
				5	h-off
4019	**dLY2**	w/r	0...900	Delay of alarm 1 switch on and switch off (in seconds)	
4020	**LEd2**	w/r	0...1	Support of alarm 2 signaling	
				Value	**Description**
				0	Support switched off
				1	Support switched on
4021	**P_a3**	w/r	0, 1	Input quantity controlling the alarm 3	
				Value	**Description**
				0	Main input
				1	Auxiliary input
4022	**tyP3**	w/r	0...5	Type of alarmu 3 (description – fig. 12)	
				Value	**Description**
				0	n-on
				1	n-off
				2	on
				3	off
				4	h-on
				5	h-off

4023	**dLY3**	w/r	0...900	Delay of alarm 3 switch on and switch off (in seconds)	
4024	**LEd3**	w/r	0...1	Support of alarm 3 signaling	
				Value	**Description**
				0	Support switched off
				1	Support switched on
4025	**P_a4**	w/r	0, 1	Input quantity controlling the alarm	
				Value	**Description**
				0	Main input
				1	Auxiliary input
4026	**tyP4**	w/r	0...5	Type of alarm 4 (description – fig. 12)	
				Value	**Description**
				0	n-on
				1	n-off
				2	on
				3	off
				4	h-on
				5	h-off
4027	**dLY4**	w/r	0...900	Delay of alarm 4 switch on and switch off (in seconds)	
4028	**LEd4**	w/r	0...1	Support of alarm 4 signaling	
				Value	**Description**
				0	Support switched off
				1	Support switched on
4029	**P_an**	w/r	0, 1	Input quantity, which the analog output has to react on.	
				Value	**Description**
				0	Main input
				1	Auxiliary input
4030	**tYPa**	w/r	0...2	Type of analog output	
				Value	**Description**
				0	Voltage input 0...10 V
				1	Current input 0...20 mA
				2	Current input 4...20 mA
4031	**bAud**	w/r	0...5	Baud rate	
				Value	**Description**
				0	4800 bit/s
				1	9600 bit/s

				2 19200 bit/s 3 38400 bit/s 4 57600 bit/s 5 115200 bit/s
4032	**prot**	w/r	0...3	Transmission mode
				Value / **Description** 0 RTU 8N2 1 RTU 8E1 2 RTU 8O1 3 RTU 8N1
4033	**Addr**	w/r	0...247	Device address. The write of the value 0 causes the interface switching off.
4034	**sAvE**	w/r	0...1	Update transmission parameters. Causes the application of introduced RS-485 interface settings.
4035	**SEt**	w/r	0...1	Write of standard parameters
				Value / **Description** 0 without changes 1 Setup of standard parameters
4036	**SEc**	w/r	0...6000	Password for parameters
				Value / **Description** 0 without password ... Entry in parameters preceded by a request about the password
4037	**hour**	w/r	0...2359	Current time
				This parameter occurs in the ggmm format, where: gg - means hours, mm – means minutes. The introduction of a wrong hour will cause the setting 23, however the introduction of wrong minutes will generate the setting of the value 59.
4038	**unit**	w/r	0, 1	Switching on/off the unit highlight
				Value / **Description** 0 Highlight swiched off 1 Highlight switched on
...	**...**	...	...	Reserved
4048	Status1	w/r	0...65535	Meter status. Describes the current state of the meter. Successive bits present the given event. The bit set up on 1 means, that the event took place. Events can be only erased. Bit 15 Break of the supply

				Bit 14	RTC clock. Loss of settings
				Bit 13	Not used
				Bit 12	Lack of communication with data memory
				Bit 11	Wrong settings
				Bit 10	Manufacturer' s settings restored
				Bit 9	Lack of measured values in data memory
				Bit 8	Reset of the auxiliary counter
				Bit 7	Output plate is detected
				Bit 6	Output plate – error or lack of calibration
				Bit 5	Reset of the main counter (the counter has been automatically erased)
				Bit 4	Not used
				Bit 3	Wrong configuration of the individual characteristic.
				Bit 2	Not used
				Bit 1	Not used
				Bit 0	The averaging period Has not elapsed
4049	Status2	w/r		Meter status. Describes the current state of the meter. Successive bits present the given event. The bit set on 1 means, that the event took place. Events can be only erased.	
				Bit 15	Not used
				Bit 14	Not used
				Bit 13	Not used
				Bit 12	Not used
				Bit 11	Not used
				Bit 10	Not used
				Bit 9	Status of the RESET input
				Bit 8	Status of the START / STOP input.
				Bit 7	LED4 – Signaling of alarm No. 4.
				Bit 6	LED3 – Signaling of alarm No. 3.
				Bit 5	LED2 – Signaling of alarm No. 2.
				Bit 4	LED1 – Signaling of alarm No. 1.
				Bit 3	Status of the alarm relay 4.
				Bit 2	Status of the alarm relay 3.
				Bit 1	Status of the alarm relay 2.
				Bit 0	Status of the alarm relay 1.

Table 12

The value is placed in two successive 16-bit registers. These registers include the same data. as 32-bit registers from the area 7600	The value is placed in 32-bit registers	Sym-bol	write (w) / rea-dout (r)	Range	Description
6200/7200	7600	**CoLLo**	w/r	-19999...99999	Lower threshold of the display color change
6202/7202	7601	**CoLHl**	w/r	-19999...99999	Upper threshold of the display color change
6204/7204	7602	**ovrLo**	w/r	-19999...99999	Lower threshold of the display narrowing
6206/7206	7603	**ovrHl**	w/r	-19999...99999	Upper threshold of the display narrowing
6208/7208	7604	**PRL1**	w/r	-19999...99999	Lower threshold of alarm 1
6210/7210	7605	**PrH1**	w/r	-19999...99999	Upper threshold of alarm 1
6212/7212	7606	**PRL2**	w/r	-19999...99999	Lower threshold of alarm 2
6214/7214	7607	**PrH2**	w/r	-19999...99999	Upper threshold of alarm 2
6216/7216	7608	**PRL3**	w/r	-19999...99999	Lower threshold of alarm 3
6218/7218	7609	**PrH3**	w/r	-19999...99999	Upper threshold of alarm 3
6220/7220	7610	**PRL4**	w/r	-19999...99999	Lower threshold of alarm 4
6222/7222	7611	**PrH4**	w/r	-19999...99999	Upper threshold of alarm 4
6224/7224	7612	**AnL**	w/r	-19999...99999	Lower threshold of analog output
6226/7226	7613	**AnH**	w/r	-19999...99999	Upper threshold of analog output
6228/7228	7614	**ConS1**	w/r	-19999...99999	Constant recalibrating the input quantity on the main input
6230/7230	7615	**t_L1**	w/r	0...60000	Minimal duration of the low pulse level on the main input
6232/7232	7616	**t_H1**	w/r	0...60000	Minimal duration of the high pulse level on the main input

6234/7234	7617	**Auto1**	w/r	-19999...99999	Automatic reset of the main counter Measurement time of the low frequency, speed and periods (table 8a)
6236/7236	7618	**Cons2**	w/r	-19999...99999	Constant recalibrating the input quantity on the auxiliary input
6238/7238	7619	**t_L2**	w/r	0...60000	Minimal duration of the low pulse level on the auxiliary input
6240/7240	7620	**t_H2**	w/r	0...60000	Minimal duration of the high pulse level on the auxiliary input
6242/7242	7621	**Auto2**	w/r	-19999...99999	Automatic reset of the auxiliary counter (table 8a)
6244/7244	7622	**H1**	w/r	-19999...99999	Point of the individual characteristic. Point No. 1
6246/7246	7623	**Y1**	w/r	-19999...99999	Expected value for the point No. 1
6248/7248	7624	**H2**	w/r	-19999...99999	Point of the individual characteristic. Point No. 2
6250/7250	7625	**Y2**	w/r	-19999...99999	Expected value for the point No. 2
6252/7252	7626	**H3**	w/r	-19999...99999	Point of the individual characteristic. Point No. 3
6254/7254	7627	**Y3**	w/r	-19999...99999	Expected value for the point No. 3
6256/7256	7628	**H4**	w/r	-19999...99999	Point of the individual characteristic. Point No. 4
6258/7258	7629	**Y4**	w/r	-19999...99999	Expected value for the point No. 4
6260/7260	7630	**H5**	w/r	-19999...99999	Point of the individual characteristic. Point No. 5
6262/7262	7631	**Y5**	w/r	-19999...99999	Expected value for the point No. 5
6264/7264	7632	**H6**	w/r	-19999...99999	Point of the individual characteristic. Point No. 6
6266/7266	7633	**Y6**	w/r	-19999...99999	Expected value for the point No. 6
6268/7268	7634	**H7**	w/r	-19999...99999	Point of the individual characteristic. Point No. 7
6270/7270	7635	**Y7**	w/r	-19999...99999	Expected value for the point No. 7
6272/7272	7636	**H8**	w/r	-19999...99999	Point of the individual characteristic. Point No. 8
6274/7274	7637	**Y8**	w/r	-19999...99999	Expected value for the point No. 8
6276/7276	7638	**H9**	w/r	-19999...99999	Point of the individual characteristic. Point No. 9
6278/7278	7639	**Y9**	w/r	-19999...99999	Expected value for the point No. 9
6280/7280	7640	**H10**	w/r	-19999...99999	Point of the individual characteristic. Point No. 10
6282/7282	7641	**Y10**	w/r	-19999...99999	Expected value for the point No. 10

Table 12

6284/7284	7642	**H11**	w/r	-19999...99999	Point of the individual characteristic. Point No. 11
6286/7286	7643	**Y11**	w/r	-19999...99999	Expected value for the point No. 11
6288/7288	7644	**H12**	w/r	-19999...99999	Point of the individual characteristic. Point No. 12
6290/7290	7645	**Y12**	w/r	-19999...99999	Expected value for the point No. 12
6292/7292	7646	**H13**	w/r	-19999...99999	Point of the individual characteristic. Point No. 13
6294/7294	7647	**Y13**	w/r	-19999...99999	Expected value for the point No. 13
6296/7296	7648	**H14**	w/r	-19999...99999	Point of the individual characteristic. Point No. 14
6298/7298	7649	**Y14**	w/r	-19999...99999	Expected value for the point No. 14
6300/7300	7650	**H15**	w/r	-19999...99999	Point of the individual characteristic. Point No. 15
6302/7302	7651	**Y15**	w/r	-19999...99999	Expected value for the point No. 15
6304/7304	7652	**H16**	w/r	-19999...99999	Point of the individual characteristic. Point No. 16
6306/7306	7653	**Y16**	w/r	-19999...99999	Expected value for the point No. 16
6308/7308	7654	**H17**	w/r	-19999...99999	Point of the individual characteristic. Point No. 17
6310/7310	7655	**Y17**	w/r	-19999...99999	Expected value for the point No. 17
6312/7312	7656	**H18**	w/r	-19999...99999	Point of the individual characteristic. Point No. 18
6314/7314	7657	**Y18**	w/r	-19999...99999	Expected value for the point No. 18
6316/7316	7658	**H19**	w/r	-19999...99999	Point of the individual characteristic. Point No. 19
6318/7318	7659	**Y19**	w/r	-19999...99999	Expected value for the point No. 19
6320/7320	7660	**H20**	w/r	-19999...99999	Point of the individual characteristic. Point No. 20
6322/7322	7661	**Y20**	w/r	-19999...99999	Expected value for the point No. 20
6324/7324	7662	**H21**	w/r	-19999...99999	Point of the individual characteristic. Point No. 21
6326/7326	7663	**Y21**	w/r	-19999...99999	Expected value for the point No. 21

6.6. Registers only for Readout

Table 13

The value placed In two successive 16-bit registers. These registers include the same data as 32-bit registers from the area 7500	The value is placed in 32-bit registers	Name	Write (w) /readout (r)	Unit	Name of the quantity
6000/7000	7500	Identifier	0	—	Constant identifying the device. The value 181 means the N30O meter
6002/7002	7501	Status	0	—	Status is register describing the current state of the meter
6004/7004	7502	Control	0	%	It is a register defining the steering out of the analog output
6006/7006	7503	Minimum	0	—	Minimal value of the currently displayed value
6008/7008	7504	Maximum	0	—	Maximal value of the currently displayed value
6010/7010	7505	Displayed value	0	—	Currently displayed value
6012/7012	7506	Measured value on the auxiliary input	0	—	Currently measured value on the auxiliary input
6014/7014	7507	Number of pulses counted by the Cnt1 counter	0	—	Number of pulses counted by the Cnt1 counter without additional calculations
6016/7016	7508	Number of pulses counted by the Cnt2 counter	0	—	Number of pulses counted by the Cnt2 counter without additional calculations
6018/7018	7509	Status2	0	—	Status2 is register for current status of the meter (value as in register 4049)

7. SOFTWARE UPDATING

Function enabling updating of software from the computer of the PC with software eCon was implementation in meter ND30O. Free software eCon and update files are accessible on the site *www.lumel.com.pl*. The connected to the computer converter RS485 is required on USB to the updating, e.g.: the converter PD10.

a)

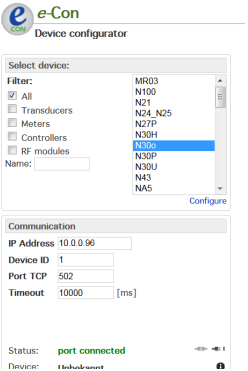

b)

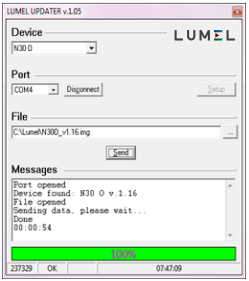

Fig.14. Program view: a) eCon, b) updating of software

Note! After updating the software, the manufacturer's settings of the meter should be set, so it is recommended to save the meter parameters before updating using the software eCon.

After starting eCon's software COM port, baudrate, transmission mode and adress should be set. It can be done in *Options*. Then, N30o meter should be selected from *Device*. Push icon *Load* to read and save current settings. Open window *Lumel Updater* (LU) – figure 13b from *Updating->Updating of devices firmware*. Push *Connect*. Update progress is shown in *Messages* section. Text *Port opened* appear after correctly opened port. Putting meter in update's mode can be done in two ways: remote from LU (with settings from eCon – port, baudrate, transmission mode and adress) or by turning power on while ↵ button pressed. Meter display shows the „*boot*" inscription with bootloader version, LU shows message „*Device found*" with name and current version of firmware. Using button ... browse to the meter upgrade file. If the file is opened correctly, a *File opened* message is displayed. Press the Send button. When upgrade is successfully completed, meter reverts to the default settings and begins normal operation while the information window displays *Done* message and upgrade elapsed time. Close LU and go to *Restoration of default parameters*. Select checkbox and press *Apply* button. After the LU window is closed, press the *Save* icon to save all initially read parameters. Current firmware version can be checked when meter is power on.

Warning! Turning the meter off during upgrade process may result in permanent damage!

8. ERROR CODES

After switching the meter on or during the work, messages about errors can appear.

Messages about errors and their reasons are presented below.

Table 14

Error message	Description
– – – – –	Overflow of upper value of the measuring range value or the programmed indication range
_ _ _ _ _	Overflow of lower value of the measuring range value or the programmed indication range
ErFrt	Communication error with the data memory. One must contact the service workshop.
ErPar	Parameter error. Wrong configuration data. Manufacturer's settings will be restored after pressing any button.
ErdEF	Default settings have been restored. One must press any push-button to transit to a normal work.
ErFPL	Error of measured values stored by the meter (measured value, maximal value, minimal value). One must press any push-button to transit to the normal work. After pressing the push-button, the ErdEF message will be displayed during one second.
ErCAo	Error of analog output calibration. One must press any push-button to transit to the normal mode. Analog outputs will not be serviced. One must contact the Service Department.

9. TECHNICAL DATA

Measuring Ranges.

Table 15

Kind of inputs	Indication range	Class
Number of pulses Cntr1, Cntr2	-19 999..99 999 1)	±1 pulse
Frequency <10 kHz	0.05...99 999 Hz 2)	0.01
Frequency >10 kHz	1...99 999 kHz (measuring range up to 1 MHz) 3)	0.01
Rotational speed	0.05...99 999 [Rev/min] 1)	0.01
Period t < 10s	0.0001...11 [s] 1)	0.01
Period t > 10s	0.0001...3600 [s] 1)	0.01
Worktime counter	0...99 999 [h]	0.005% of the indicated value
Current time	00.00...23.59	± 50 ppm
Encoder	-19 999...99 999 1)	-

1) maximal frequency of input signal with filter :2 kHz ; without filter for Cntr1 input 10 kHz, for Cntr2 input 8 kHz (table 8).

2) maximal frequency of input signal: 100 kHz; measuring range without filter:10 kHz, with filter 100Hz.

3) maximal frequency of input signal: 1MHz,

Relay outputs

- relays, NOC voltageless contacts load capacity 250 V~/0.5A~
- relays, switched voltageless contacts load capacity 250 V~/0.5A~

Analog outputs (option)

- rogrammable, current 0/4..20 mA load resistance ≤ 500 Ω
- programmable, voltage 0...10 V load resistance ≥ 500 Ω

Output of auxiliary supply	24 V d.c./30 mA
Alarm output OC (option)	output of OC type, passive npn, 30 V d.c./30 mA.
Input signals	voltage 5...36 V d.c., galvanically separated
Duration of control signals	higher than 10 ms
Serial interface RS 485	address: 1...247
	mode: 8N2, 8E1, 8O1, 8N1
	baud rate: 4.8, 9.6, 19.2, 38.4, 57.6, 115.2 [kb/s].
	maximal response time 100 ms
Transmission protocol	MODBUS RTU
Error of analog output	0.2% of the set range
Protection level ensured by the casing:	
- frontal side	IP65
- terminal side	IP10
Weight	< 0.2 kg
Overall dimensions	96 × 48 × 93 mm (with terminals)
Reference Conditions and Rated Operating Conditions:	
- supply voltage	85...253 V d.c./a.c. 40...400 Hz or 20...40 V d.c./a.c. 40...400 Hz
- ambient temperature	-25...23...+55°C
- storage temperature	-33...+70°C
- relative air humidity	25...95% (inadmissible condensation of water vapour)
- work position	any
- power input	< 6 VA

Additional errors:

- from temperature changes:	for analog inputs and outputs 50% of the class/10 K

Standards fulfilled by the meter:

Electromagnetic compatibility:

- noise immunity acc. to EN 61000-6-2
- noise emissions acc. to EN 61000-6-4

Safety requirements:

acc. to EN61010-1 standard:

- isolation between circuits: basic,
- installation category: III,
- pollution level: 2,
- maximal phase-to-earth work voltage:
  - 300 V for the supply circuit,
  - 50 V for remaining circuits.
- altitude above sea level: < 2000 m.

10. PROGRAMMING EXAMPLES

Example 1. Programming the meter to work with the flowmeter with reed relay output of the following parameters:
- pulse constant 1K - 4,3956 dm^3/pulse = 0,0043956 m^3/pulse;
- minimal flow Q_{min} – 0,02 m^3/h

The parameters of input 1 should be set as follows:
- **tYP1** should be set to **FreqL** (frequency for (f<10kHz));

The pulse constant for scaling should be given in m^3, but only five significant digits can be set. When multiplying by a constant (**SCAL** set to **AND**), when rounded to five digits we get value 0.0044 (introducing to the result of the calculation error of 0.1%). To reduce the error introduced by the conversion, change the scaling by a constant dividing (**SCAL** set to **div**) and as a constant value write the multiplicative inverse:

$$ConS1 = \frac{1}{0{,}0043956} = 227{,}5002275 \approx 227{,}50$$

When the inverse is rounded to five digits, the error introduced into the calculations is of the size of 0.0001%.
- **SCAL1** should be set to **dIv**, **ConS1** should be set to 227,50;
- **t_L1** and **t_H1** should be set to a value 10 [ms] (due to the multiplication of the pulse with a mechanical switch);
- **E-In1** – if no control inputs are used, should be set to **bUt**;

To set the time, after which a zero flow will be indicated, the maximum time interval between pulses should be calculated for minimum flow Q_{min}.

$$\textit{maximal time interval between pulses } t_max = \frac{\text{pulse weight [m3]} * 3600\text{ [s]}}{Q_{min}\text{ [m3]}}$$

$$t_max = \frac{0{,}0043956 * 3600\text{ [s]}}{6}$$

- **Auto1** – the maximum time interval between pulses for minimum flow - 16 [s];
- **FUnCt** – mathematical functions - for frequency measurement should be set to **oFF**;
- **Cnt1** – set to value 1 (averaging current measurements every second). Then set the individual characteristics:
- **IndCp** – set 2 points;
- **X1** – set – 0 [Hz], **Y1** set the corresponding flow 0 m^3/h;
- **X2** – set 1 pulse – 1 [Hz], **Y2** set the corresponding flow 3600 m^3/h.

Example 2 Programming the analog output: if you want to program the analog output as a signal 4...20 mA proportional to flow: 4 mA - 0 m^3 / h, 20 mA - 125 m^3/h, set the output parameters as follows:
- **P_An** – set **InP1**;
- **AnL** set the value 0;
- **AnH** set the value 125;
- **typA** set the type 4_20A (4..20mA).

Example 3 Programming the alarm output working with time delay: if we want the alarm 1 to work in the range of flow from 1 m^3/h to 30 m^3/h and to be activated after 10 seconds, set the alarm parameters as follows:
- **P_A1** – set **InP1**;
- **PrL1**- set the value 1;
- **PrH1** -set the value 30;
- **typ1** -set the type on;
- **dLY1**- set the value 10;
- **LEd1** – if an alarm indication is needed, it should be set to **on**, otherwise to **oFF**.

11. ORDER CODES

Table 16

N30O -	X	X	XX	XX	X	X
Supply:						
85...253 V a.c.(40...400 Hz) or d.c.	1					
20...40 V a.c. (40...400 Hz) or d.c.d.c.	2					
Additional outputs:						
lack		0				
OC output, RS-485, analog outputs		1				
OC output, RS-485, analog outputs switched-over relay outputs		2				
Unit:						
unit code acc. to the table 2			XX			
Version:						
standard				00		
custom-made*				XX		
Language:						
Polish					P	
English					E	
other*					X	
Acceptance tests:						
without extra requirements						0
with an extra quality inspection certificate						1

* - after agreeing with the manufacturer.

Order example: The code **N30O - 1 0 01 00 E 0** means:

N30O - programmable N30O digital panel meter
1 - supply: 85...253 V a.c./d.c.
0 - lack of additional outputs
01 - unit "V" acc. to tabel 2
00 - standard option
E - English language
0 - without extra requirements

Code of the backlighted unit Table 17

Code	Unit	Code	Unit
00	Lack of unit	29	%
01	V	30	%RH
02	A	31	pH
03	mV	32	kg
04	kV	33	bar
05	mA	34	m
06	kA	35	l
07	W	36	s
08	kW	37	h
09	MW	38	m^3
10	var	39	obr
11	kvar	40	szt
12	Mvar	41	imp
13	VA	42	rps
14	kVA	43	m/s
15	MVA	44	l/s
16	kWh	45	obr/min
17	MWh	46	r.p.m.
18	kvarh	47	mm/min
19	Mvarh	48	m/min
20	kVAh	49	l/min
21	MVAh	50	m^3/min
22	Hz	51	szt/h
23	kHz	52	m/h
24	Ω	53	km/h
25	kΩ	54	m^3/h
26	°C	55	kg/h
27	°F	56	l/h
28	K	XX	on order[1)]

[1)] - after agreeing with the manufacturer.

12. MAINTENANCE AND GUARANTEE

The N30O digital panel meter does not require any periodical maintenance.

In case of some incorrect operations:

1. **From the Shipping Date, During the Period Given in the Annexed Guarantee Card**

   One should take the meter down from the installation and return it to the Manufacturer's

   Quality Control Dept.

   If the meter has been used in compliance with the instructions, the Manufacturer warrants to repair it free of charge.

2. **After the Guarantee Period:**

   One should turn over the meter to repair it in a certified service workshop.

   The disassembling of the casing causes the cancellation of the granted guarantee.

Our policy is one of continuous improvement and we reserve the right to make changes in design and specifications of any products as engineering advances or necessity requires and revise the above specifications without notice.

LUMEL S.A.
ul. Słubicka 4, 65-127 Zielona Góra, Poland
tel.: +48 68 45 75 100, fax +48 68 45 75 508
www.lumel.com.pl

Technical support:
tel.: (+48 68) 45 75 143, 45 75 141, 45 75 144, 45 75 140
e-mail: export@lumel.com.pl

Export department:
tel.: (+48 68) 45 75 130, 45 75 131, 45 75 132
e-mail: export@lumel.com.pl

Calibration & Attestation:
e-mail: laboratorium@lumel.com.pl

N30O-07E