N30O DIGITAL PANEL METER

Features:

three-colour display
eCon
MOD BUS
RTC
21 points charact.
Password protection
IP65

Inputs:

Hz

Outputs:

0/4..20 mA
0..10 V
2x
2x
RS 485

Galvanic isolation:

Supply
RS 485

- Measurement: number of pulses, frequency, rotational speed, period, worktime counter.
- Two impulse counters, co-operation with encoders.
- Counter of actual and total values.
- 3-colour display (14 mm high), programmable in 3 ranges of the measured value.
- Meter programming from keyboard or through the RS-485 interface by means of the free eCon program.
- 4 alarm outputs with signalling on LED diodes, working in 6 different modes.
- Conversion of any measured value into an analog signal 0/4...20 mA or 0...10 V.
- Storage of minimal and maximal values for all measured quantities.
- Supply of object transducers (option).
- 21-point individual characteristic for the measured value.
- Mathematical function.
- Firmware updating (option).

Example of Application

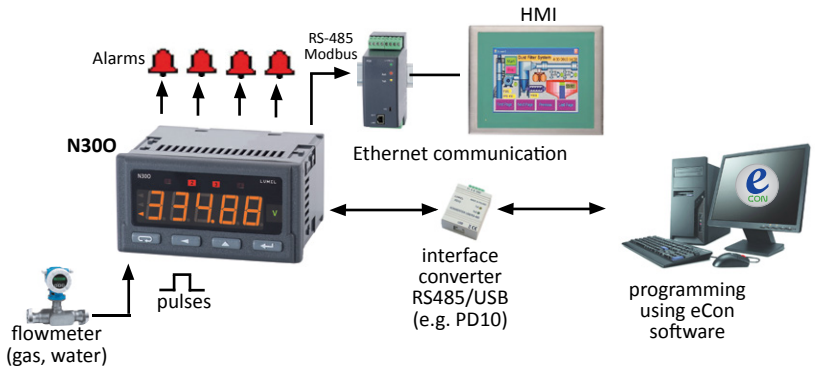

Measurement and visualization of the water/gas flow. The measured value is transmitted to the operating panel via radio modules

Inputs

Input signal:	Input kind	Indication range	Maximal frequency of input signal	Class	Remarks
Voltage 5...36 V d.c.	Number of pulses IN1/IN2	-19 999..99 999	10 kHz/ 8 kHz	±1 pulse	with signal filtering 2 kHz
	Frequency < 10 kHz	0.05..99 999 Hz	100 kHz	0.01	with signal filtering 100 Hz
	Frequency > 10 kHz	1...99 999 kHz (measuring range up to 1 MHz)	1 MHz	0.01	
	Rotational speed	0.05...99 999 [rpm]	100 kHz	0.01	
	Period t < 10 s	0.0001...11 [s]		0.01	
	Period t < 10 s	0.0001...3600 [s]		0.01	
	Worktime counter	0...99 999 [h]		0.5 sec/ 24 hours	
	Encoder	-19 999...99 999	10 kHz		with signal filtering 2 kHz
	Current time	00.00...23.59		0.5 sec/ 24 hours	

Outputs

Output kind	Properties	Remarks
Relay output	• 2 x relays, voltageless NOC contacts load-carrying capacity 250 V a.c./ 0.5 A a.c. • 2 x relays, voltageless switched contacts load-carrying capacity 250 V a.c./ 0.5 A a.c.	
Analog output	• current programmable 0/4..20mA, load resistance ≤ 500 Ω • voltage programmable 0...10 V load resistance ≥ 500 Ω	Error of analog output: **0.2% of the set range** Additional error from temperature changes: **50% of the class/10K**
OC output	• typu OC, passive npn, 30 V d.c./30 mA	
Auxiliary supply	• 24 V d.c./ 30mA	

Digital Interface

Interface type	Transmission protocol	Modes	Baud rates
RS-485	MODBUS RTU	8N2, 8E1, 8O1, 8N1	4.8, 9.6, 19.2, 38.4, 57.6, 115.2 kbit/s

Export department:
+48 68 45 75 139/ 321 / 386

Fax: +48 68 32 54 091
e-mail: export@lumel.com.pl

LUMEL S.A.
ul. Sulechowska 1
65-022 Zielona Góra
POLAND
WWW.LUMEL.COM.PL

N30O DIGITAL PANEL METER

External Features

Readout field	5-digit LED display - indication range -19999..99999 digit height: 14 mm	three-colour display (color changes depending on displayed value): red, green, orange
Weight	< 0.2 kg	
Overall dimensions	96 × 48 × 93 mm	Panel cut-out: $92^{+0,6} \times 45^{+0,6}$ mm
Protection grade (acc. to EN 60529)	from frontal side: IP65	from rear side: IP 10

Rated Operating Conditions

Supply voltage	85...253 V a.c. (40...400 Hz) or d.c., 20...40 V a.c. (40...400 Hz) or d.c.	power input < 6 VA
Temperature	ambient: -25...23...55°C	storage: -33...70°C
Relative humidity	25...95%	condensation inadmissible
Operating position	any	
External magnetic field	0...400 A/m	

Safety And Compatibility Requirements

Electromagnetic compatibility	Noise immunity	acc. to EN 61000-6-2
	Noise emissions	acc. to EN 61000-6-4
Isolation between circuits	basic	acc. to EN 61010-1
Pollution grade	2	
Installation category	III	
Maximal phase-to-earth operating voltage	for the supply circuit: 300 V	
	for remaining circuits: 50 V	
Altitude above sea level	< 2000 m	

Connection Diagrams

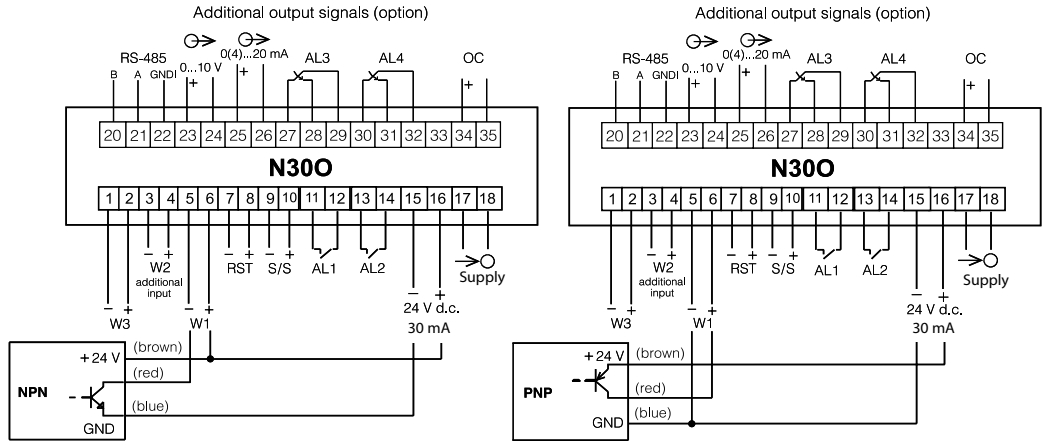

Connections of the transducer with the OC output of NPN and PNP type.

Ordering

Table 1. Ordering codes:

N30O	X	X	XX	XX	X	X
Supply:						
85...253 V a.c.(40...400 Hz) or d.c.	1					
20...40 V a.c. (40...400 Hz) or d.c.d.c.	2					
Additional outputs:						
lack		0				
OC output, RS-485, analog outputs		1				
OC output, RS-485, analog outputs switched-over relay outputs		2				
Unit:						
unit code acc. to the table 2			XX			
Version:						
standard				00		
custom-made*				XX		
Language:						
Polish					P	
English					E	
other*					X	
Acceptance tests:						
without extra requirements						0
with an extra quality inspection certificate						1

Order example: The code **N30O 100100E0** means:
N30O - programmable N30O digital panel meter
1 - supply: 85...253 V a.c./d.c.
0 - lack of additional outputs
01 - unit "V" acc. to tabel 2
00 - standard option
E - English language
0 - without extra requirements

Table 2. Codes of highlighted unit:

Code	Unit	Code	Unit	Code	Unit
00	lack of unit	20	kVAh	40	szt.
01	V	21	MVAh	41	imp
02	A	22	Hz	42	rps
03	mV	23	kHz	43	m/s
04	kV	24	Ω	44	l/s
05	mA	25	kΩ	45	obr/min
06	kA	26	°C	46	rpm
07	W	27	°F	47	mm/min
08	kW	28	K	48	m/min
09	MW	29	%	49	l/min
10	var	30	%RH	50	m^3/min
11	kvar	31	pH	51	szt./h
12	Mvar	32	kg	52	m/h
13	VA	33	bar	53	km/h
14	kVA	34	m	54	m^3/h
15	MVA	35	l	55	kg/h
16	kWh	36	s	56	l/h
17	MWh	37	h	XX	on order*
18	kvarh	38	m^3		
19	Mvarh	39	obr		

* - after agreeing with the manufacturer

Castel Maggiore (BO) 40013
Via Lirone 60/i

e-mail: info@eurotecsrl.com
Tel: +39 051/6321595
Website: www.eurotecsrl.com

C.F.: 04103780377
P.I.: 01596581205