EUROTEC
TECNOLOGIE IMPIANTISTICHE - AUTOMAZIONE - TELECONTROLLO

LUMEL
EVERYTHING COUNTS

DIGITAL PANEL METER

N30H



USER'S MANUAL

CE

Contents

1. APPLICATION AND METER DESIGN 5
2. METER SET.....6
3. BASIC REQUIREMENTS, OPERATIONAL SAFETY 7
4. INSTALLATION.....8
5. SERVICE 11
6. RS-485 INTERFACE 27
7. SOFTWARE UPDATE.....27
8. ERROR CODES 41
9. TECHNICAL DATA 42
10. ORDER CODES 44
11. MAINTENANCE AND GUARANTEE.....46

1. APPLICATION AND METER DESIGN

The N30H meter is a programmable digital panel meter destined for the measurement of d.c. voltage or d.c. current. Additionally, the meter enables the indication of the current time. The readout field is a LED display, which allows the exposition of results in colours: red, green and orange. The measured input signal can be arbitrary converted by means of a 21-point individual characteristic.

Features of the N30H meter:

- display colour individually programmed in three intervals,
- programmable thresholds of displayed overflows,
- 2 NOC relay alarms operating in 6 modes,
- 2 switched relay alarms with a switching contact operating in 6 modes (option),
- signaling of the measuring range overflow,
- automatic setting of the decimal point,
- programming of alarm and analog outputs with the reaction on the chosen input quantity (main or auxiliary input),
- real-time clock with the function of the clock supply support in case of the meter supply decay,
- programmed averaging time – function of walking window with the averaging time up to 1 hour,
- monitoring of set parameter values,
- interlocking of introduced parameters by means of a password,
- recount of the measured quantity on the base of a 21-point individual characteristic,
- service of the interface with MODBUS protocol in the RTU mode (option),
- conversion of the measured value into a standard – programmable current or voltage signal (option),
- highlight of any measuring unit acc. to the order.

- signaling of alarm operation – switching the alarm on causes the highlight of the output number,
- galvanic separation between connectors: alarm, supply, input, analog output connections and RS-485 interface.

Protection degree from frontal side: IP65

Meter overall dimensions: 96 x 48 x 93 mm (with terminals).

The meter casing is made of plastics.



Fig. 1. View of the N30H meter

2. METER SET

The set is composed of:

- N30H meter ..... 1 pc
- User's manual ..... 1 pc
- Guarantee card ..... 1 pc
- Clamps to fix in the panel ..... 4 pcs
- Seal ..... 1 pc

When unpacking the meter, please check whether the type and execution code on the data plate correspond to the order.

3. BASIC REQUIREMENTS, OPERATIONAL SAFETY

In the safety service scope, the N30H meter meets the requirements of the EN 61010-1 standard.



Observations concerning the operational safety

- All operations concerning transport, installation, and commissioning as well as maintenance, must be carried out by qualified, skilled personnel, and national regulations for the prevention of accidents must be observed.
- The programming of N30H meter parameters must be carried out after disconnecting measuring circuits
- Before switching the meter on, one must check the correctness of connections.
- Do not connect the meter to the network through an autotransformer.
- Before removing the meter housing, one must switch the supply off and disconnect measuring circuits.
- The meter is designed to be installed and exploited in electromagnetic industrial environment conditions.
- Non-authorized removal of the housing, inappropriate use, incorrect installation or operation, creates the risk of injury to personnel or meter damage.

For more detailed information, please study the User's Manual.

- When connecting the supply, one must remember that a switch or a circuit-breaker should be installed in the building. This switch should be located near the device, easy accessible by the operator, and suitably marked as an element switching the meter off.

4. INSTALLATION

The meter has separable strips with screw terminals, which enable the connection of external wires of 2.5 mm^2 cross-section. Strips of input signals are protected against any accidental disconnection by means of a screw joint.

One must prepare a hole of $92^{+0,6} \times 45^{+0,6}$ mm in the panel, which the thickness should not exceed 6 mm.

The meter is adapted to be mounted in a panel. The meter must be introduced from the panel front with disconnected supply voltage. Before the insertion into the panel, one must check the correct placement of the seal. After the insertion into the hole, fix the meter by means of clamps (fig.2).

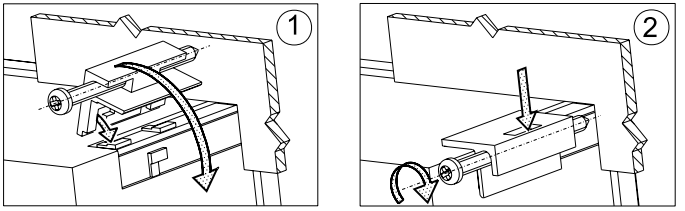

Fig. 2. Meter fixing

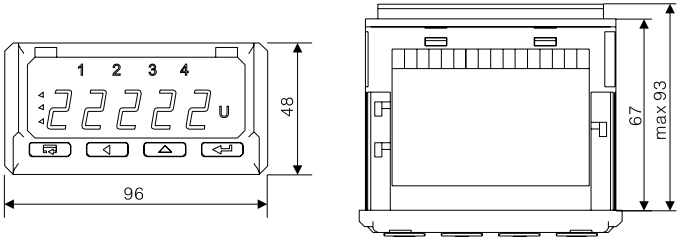

Fig. 3. Overall dimensions

4.1. Signals Leads

Signals led out on the meter connectors are presented on the fig. 4. All input signals are separated between them from remaining circuits. Analog outputs are not separated between them. **One don't have to take simultaneously advantage of voltage and current measurements**, since measuring circuits of voltage and current are not galvanically isolated.

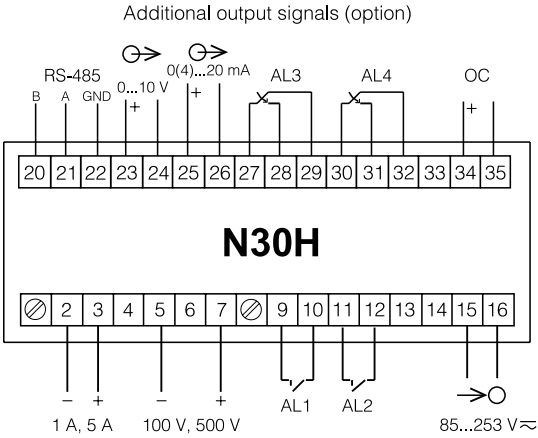

Fig. 4. Description of signals on connection strips

- 1 A, 5 A – terminals for the current measurement on the 1 A or 5 A range.
- 100 V, 500 V – terminals for the voltage measurement on the 100 V or 500 V range.
- OC –output of open collector type with an npn output transistor. The output is turned on in case of a measuring range overflow.

4.2. Examples of Connections

An example of the N30H meter connection for current measurement is presented on the fig. 5.

However, an example of the meter connection in the configuration for voltage measurement is presented on the fig. 6.

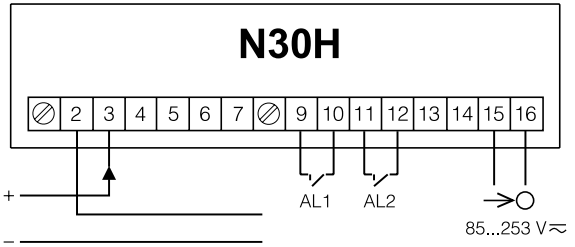

Fig. 5. Meter connection in the configuration for current measurement

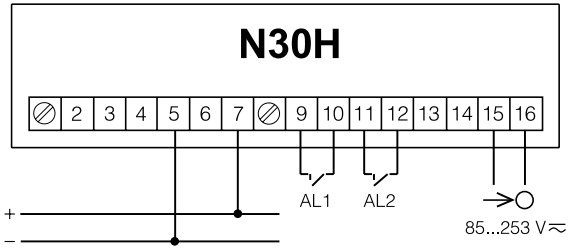

Fig. 6. Meter connection in the configuration for voltage measurement

5. SERVICE

5.1. Display Description

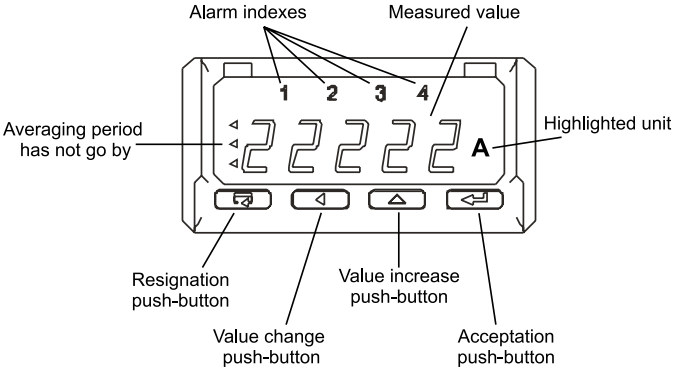

Fig. 7. Description of the meter frontal plate

5.2. Messages after Switching the Supply on

After switching the supply on, the meter displays the meter name N30H, and next the program version in the form „r x.xx" – where x.xx is the number of the current program version or the number of a custom-made execution. Next, the meter carries out measurements and displays the value of the input signal. The meter sets automatically the decimal point position, when displaying the value. The format (number of places after the decimal point) can be limited by the user.

5.3. Functions of Push-buttons

[↵] - Acceptation push-button:

⇒ entry in programming mode (press and hold ca 3 seconds)
⇒ moving through the menu – level selection,
⇒ entry in the mode changing the parameter value,
⇒ acceptation of the changed parameter value.
⇒ stop the measurement – when holding down the push, the result is not updated. The measurement is still carried out.
⇒ Turning on the power supply of the meter while holding the button – entering the software-update mode through RS485 interface

[▲] - Push-button increasing the value:

⇒ display of maximal value, The pressure of the push-button causes the display of the maximal value during ca 3 seconds.
⇒ entry in the level of the parameter group,
⇒ moving on the chosen level,
⇒ change of the chosen parameter value – increasing the value.

[◄] - Push-button to change the digit:

⇒ display of minimal value, The pressure of the push-button causes the display of the maximal value during ca 3 seconds.
⇒ entry in the level of parameter group,
⇒ moving through the chosen level,
⇒ change of chosen parameter value – shift on the next digit,

[↩] - Resignation push-button:

⇒ entry in the menu monitoring the meter parameters (press and hold ca 3 seconds),
⇒ exit from the menu monitoring meter parameters,
⇒ resignation of the parameter change,
⇒ strict exit from the programming mode (press and hold ca 3 seconds).

The pressure of the push-button combination [▤] [↵] and holding down them during ca 3 seconds causes the deletion of alarm signaling. This operation acts only when the support function is switched on.

The pressure of the push-button combination [▤] [◁] causes the erasing of the minimal value.

The pressure of the push-button combination [▤] [△] causes the erasing of the maximal value.

The pressure and holding down the [↵] push-button during ca 3 seconds causes the entry to the programming matrix. The programming matrix can be protected by a safety code.

The pressure and holding down the [▤] push-button during ca 3 seconds causes the entry to the menu monitoring meter parameters. One must move through the monitoring menu by means of [◁] and [△] push-buttons. In this menu, all programmable meter parameters are available only for readout. In this mode, the menu **Ser** is not available. The exit from the monitoring menu is carried out by means of the [▤] push-button. In the monitoring menu, parameter symbols are displayed alternately with their values.

The service algorithm of the meter is presented on the fig. 8.

The appearance of the symbols mentioned below on the display means:



- Incorrectly introduced safety code.



- Overflow of the upper measuring range.



- Overflow of the lower measuring range.

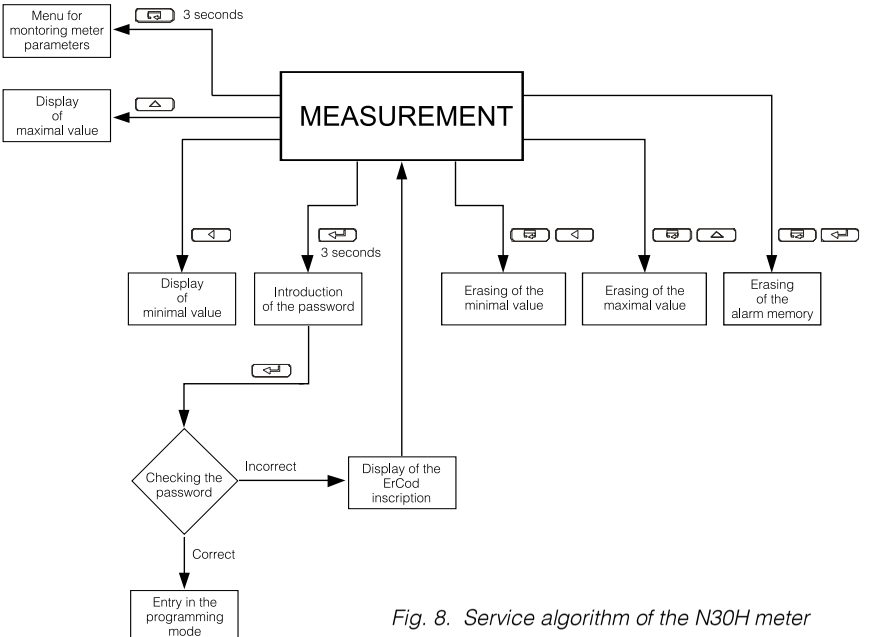

Fig. 8. Service algorithm of the N30H meter

5.4. Programming

The pressure of the [⏎] push-button and holding it down through ca 3 seconds causes the entry to the programming matrix. If the entry is protected by a password, then the safety code symbol **SEC** is displayed alternately with the set value **0**. The write of the correct code causes the entry to the matrix, the write of an incorrect code causes the display of the **ErCod** inscription. The matrix of transitions to the programming mode is presented on the fig. 9. The choice of the level is made by means of the [⏎] push-button, however the entry and moving through the parameters of the chosen level is carried out by means of the [◁] and [△] push-buttons. Parameter symbols are displayed alternately with their current values. In order to change the value of the chosen parameter, one must use the [⏎] push-button. For resignation from change, one must use the [↩] push-button. In order to exit from the chosen level, one must chose the **-----** symbol and press the [⏎] push-button. To exit from the programming matrix, one must press during ca 1 second the [↩] push-button. Then, the inscription **End** appears for ca 3 seconds and the meter transits to the display of the measured value. In case of leaving the meter in the parameter programming mode, the automatic abandon of the programming mode (the parameter and next the menu) follows after 30 seconds and the meter transits to display the measured value.

5.4.1. Value Change Way of the Chosen Parameter

In order to increase the value of the chosen parameter, one must press the [△] push-button. A single pressure of the push, causes the increase of the value of 1. The increase of value when displaying the digit 9, causes the set of 0 on this digit (or the minus mark in case of the oldest display digit). The change of the cursor position after pressing the [◁] push-button. In order to accept the set parameter,

Item												
1	**Inp1** Parameters of main input	**tYP1** Type of Measured quantity	**Cnt1** Measu-rement time	**-----**	**Y** First point of the individ. charact. Point y.	**...**	**H21** Last point of the characte-ristic	**Y21** Last point of the characte-risitc	**-----**			
2	**Ind** Parameters of individ. charact.	**IndCp** Number of points of individ. charact.	**H1** First point of the individ. charact. Point x.	**CoLbe** Middle colour	**Colup** Upper colour	**tYP1** Alarm type	**dLY1** Alarm delay	**LED1** Signaling support	**-----**	**ovrLo** Lower overflow	**ovrHi** Upper overflow	**-----**
3	**diSP** Display Parameters	**d_P** Minimal decimal point	**Coldo** Lower colour	**PrH1** Upper threshold	**tYP2** Alarm type	**dLY2** Alarm delay	**LED2** Signaling support	**-----**				
4	**ALr1** Alarm 1	**P_A1** Type of input quantity for alarm 1	**PrL1** Lower threshold	**PrH2** Upper threshold	**tYP3** Alarm type	**dLY3** Alarm delay	**LED3** Signaling support	**-----**				
5	**ALr2** Alarm 2	**P_A2** Type of input quantity for alarm 1	**PrL2** Lower threshold	**PrH3** Upper threshold	**tYP4** Alarm type	**dLY4** Alarm delay	**LED4** Signaling support	**-----**				
6	**ALr3** Alarm 3	**P_A3** Type of input quantity for alarm 1	**PrL3** Lower threshold	**PrH4** Upper threshold	**typ_A** Kind of output (volt/curr)	**bAud** Baud rate	**prot** Kind of frame	**addr** Device address	**-----**			
7	**ALr4** Alarm 4	**P_A4** Type of input quantity for alarm 2	**PrL4** Lower threshold	**AnH** Upper threshold of the analog output	**unit** Highlight the unit	**tESt** Display test	**-----**					
8	**Out** Outputs	**P_An** Type of quantity of the analog output	**AnI** Lower threshold of the analog output	**Hour** Setup of the time								
9	**SEr** Service	**Set** Write the standard parameters	**SEC** Introduction of the password	**-----**								

Fig. 9. Programming matrix

one must hold down the [◁┘] push-button. Then, the write of the parameter follows and the display of its symbol alternately with the new value. The pressure of the [R] push-button during the change of the parameter value will cause the resignation of the write.

5.4.2. Changing Floating-point Values

The change is carried out in two stages (the transition to the next stage follows after pressing the [◁┘] push-button:

1) setting values from the range -19999M...99999, similarly as for integral values;
2) setting decimal point positions (00000., 0000.0, 000.00, 00.000, 0.0000); the [◁] push-button shifts the decimal point to the left, however the [△] push shifts the decimal point to the right;

The pressure of the [R] push-button during the change of the parameter value will cause the resignation of the write.

5.4.3. Characteristic of Programmed Parameters

Programmed parameters and the range of their quantity changes are presented in the table below.

Table 1

InP 1		
Parameter symbol	**Description**	**Range of changes**
tYP1	Kind of the connected input signal	500U – input 500 V. 100U – input 100 V 5A – input 5 A. 1A – input 1 A. HoUr – current time.
Cnt1	The measurement time is expressed in seconds. The result on the display presents the mean value counted in the Cnt1 period. This parameter is not taken into consideration during the measurement in the HoUr modes.	**1...3600**

Table 2

Ind		
Parameter symbol	**Description**	**Range of changes**
IndCp	Number of points of the individual characteristic. For a value less than 2, the individual characteristic is switched off. The number of segments is the number of points decreased of one. The individual characteristic is not taken into consideration in the HoUr modes.	**1...21**
Xn	The point value for which we will expect Yn (n-point number)	**-19999...99999**
Yn	Expected value for Xn.	**-19999...99999**

Table 3

dISP		
Parameter symbol	**Description**	**Range of changes**
d_P	Minimal position of the decimal point when displaying the measured value - display format. This parameter is not taken into consideration during the CoUntH and HoUr modes.	**0.0000 – 0** **00.000 – 1** **000.00 – 2** **0000.0 – 3** **00000 – 4**
CoLdo	Display colour, when the displayed value is less than CoLLo.	**rEd – red** **grEEn – green** **orAnG -orange**
CoLbE	Display colour, when the displayed value is higher than CoLLo and less than CoLHi.	
CoLuP	Display colour when the displayed value is higher than CoLHi	
CoLLo	Lower threshold of colour change	**-19999..99999**
CoLHi	Upper threshold of colour change	**-19999..99999**
ovrLo	Lower threshold of the display narrowing. Values below the declared threshold are signaled on the display by the symbol. _ _ _ _ _.	**-19999..99999**
ovrHi	Upper threshold of display narrowing. Values above the declared threshold are signaled on the display by the symbol. - - - - -.	**-19999..99999**

Table 4

ALr1, ALr2, ALr3, ALr4		
Parameter symbol	**Description**	**Range of changes**
P_A1 **P_A2** **P_A3** **P_A4**	Input quantity, steering the alarm.	**InP1** – Main input (indicated value). **HoUr** – real time clock
tYP1 **tYP2** **tYP3** **tYP4**	Alarm type. Fig. 12 presents the graphical imaging of alarm types.	**n-on** – normal (transition from 0 to 1), **n-oFF** – normal (transition from 1 to 0), **on** – switched on, **oFF** – switched off, **H-on** – manually switched on; till the change time of the alarm type, the alarm output remains switched on for good, **H-oFF** – manually switched off; till the change time of the alarm type the output alarm remains switched off for good.
PrL1 **PrL2** **PrL3** **PrL4**	lower Alarm threshold.	**-19999...99999**
PrH1 **PrH2** **PrH3** **PrH4**	upper Alarm threshold.	**-19999...99999**
dLY1 **dLY2** **dLY3** **dLY4**	Delay of alarm switching.	**0...900**

LEd1 **LEd2** **LEd3** **LEd4**	Support of alarm signalling. In the situation when the support function is switched on , after the alarm state retreat, the signalling diode is not blanked . It signals the alarm state till its blanking moment by means of the  push-button combination. This function concerns only and exclusively the alarm signaling, thus relay contacts will operate without support according to the chosen type of alarm.	**oFF** – function switched off **on** – function switched on

Table 5

out		
Parameter symbol	**Description**	**Range of changes**
P_An	Input quantity, on which the analog output has to react..	**InP** – main input (indicated value). **HoUr** – Real Time Clock
AnL	Lower threshold of the analog output. One must give the value, for which we want to obtain the minimal value of signal on the analog output.	**-19999...99999**
AnH	Upper threshold of the analog output. One must give the value on which we want to obtain the maximal value of signal on the analog output(10 V or 20 mA).	**-19999...99999**
tYPA	Analog output type.	**0_10U** – napięciowe 0..10V **0_20A** – prądowe 0..20mA **4_20A** – prądowe 4..20mA

bAud	Baud rate of the RS485 interface	**4.8** – 4800 bit/s **9.6** – 9600 bit/s **19.2** – 19200 bit/s **38.4** – 38400 bit/s **57.6** – 57600 bit/s **115.2** – 115200 bit/s
prot	Type of transmission frame of the RS-485 interface.	**r8n2** **r8E1** **r8o1** **r8n1**
Addr	Address in the MODBUS network. The write of the value 0 switches the interface off.	**0...247**

Table 6

SEr		
Parameter symbol	**Description**	**Range of changes**
SEt	Write of manufacturer's settings. The setting of the value YES causes the write of standard parameters into the meter. The value of manufacturer's parameters is presented in the table 7.	**no** – do nothing. **YeS** – causes the write of manufacturer's settings.
SEC	Introduction of a new password. The introduction of the value 0 switched the password off.	**0...60000**
HOUR	Setting of the current time. The introduction of a wrong time cancels the introduction of time. The introduced value will not be collected.	**0.00...23.59**
unIt	Backlighting of the unit.	**On** – unit highlight switched on. **Off** – unit highlight switched off.
tESt	Display test. The test consists of a successive lighting up of digital display segments. Alarm diodes and unit highlighting diodes should be lighted .	**YeS** – causes the test start. The pressure of the  push-button ends the test. **no** – do nothing.

5.4.4 Individual Characteristic

N30H meters can recalculated the measured value into any value thanks to the implemented individual characteristic function. The individual characteristic rescales the input signal measured according to the set characteristic. The way of the individual characteristic interaction on the meter operation has been presented on the fig.10.

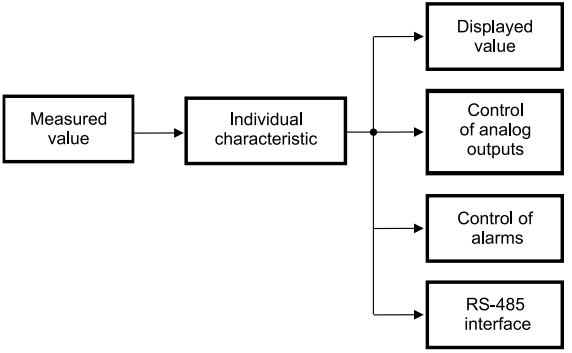

Fig. 10. Action of the individual characteristic

The user can introduce maximally twenty linearizing functions by giving points defining intervals of the given function operation and expected values for successive points. On the base of given points and corresponding values to them, coefficients a and b of recalibrating straight lines are calculated. The programming of the individual characteristic consists on the definition of the number of points which the input function will be linearized by. On must remember that the number of linearizing functions is less of one than the number of points. Next, one must program successive points by giving the measured value (Hn) and the expected value corresponding to it, – value, which has to be displayed (Yn). The graphic interpretation of the individual characteristic is presented on the fig. 11..

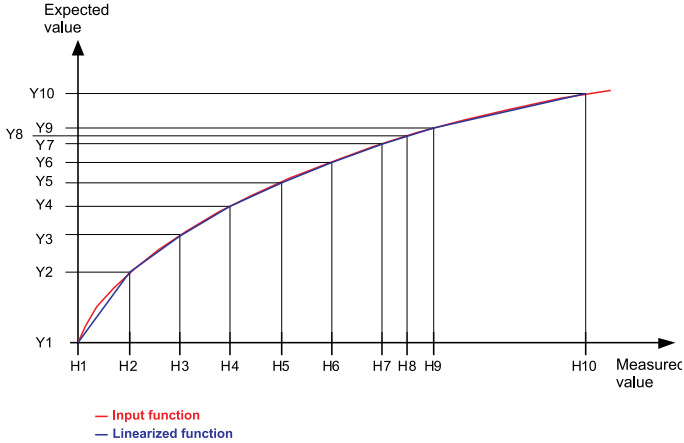

Fig. 11. Individual characteristic

During the function approximation, one must remember that for the approximation of functions strongly differing from the linear characteristic , the higher the number of linearizing segments, the smallest the error related to the linearization.

If measured values are smallest from H1 then, recalculations will be made on the base of the first straight line calculated on the base of points (H1,Y1) an (H2,Y2). However, for values higher than Hn (where n – the last declared measured value) the value to display will be calculated on the base of the last assigned linear function.

Note: All introduced points of the measured value (Hn) must be arranged in the increasing sequence, such to preserve the following dependence:

$$H1 < H2 < H3... < Hn$$

If the above is not fulfilled, the individual characteristic function will be automatically switched off (will not be realized) and a diagnostic flag will be set in the status register.

5.4.5 Alarm Types

The N30U meter is equipped with 2 alarm outputs with NOC contact (make contact) and two alarm outputs with NOC/NCC contact (make and break contact) (option). Each of alarms can work in one of the six modes . The work of alarms in modes is presented in the fig. 12. : n-on, n-off, on, off. Two remaining modes : h-on and h-off mean respectively, always switched on and always switched off. These modes are destined for the manual simulation of alarm states.

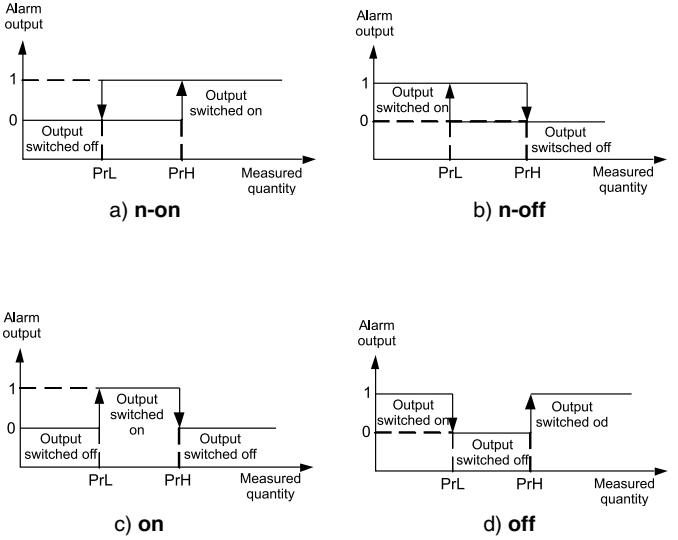

Fig. 12. Alarm types: a) n-on, b) n-off c) on d) off.

Caution !



- In case of alarms of **n-on**, **n-off**, **on**, **off** types, the write of **PrL>PrH** will cause the alarm switching off.
- In case of a measuring range overflow, the reaction of the relays is compatible with written **PrL, PrH, tYP** parameters. In spite of the displayed overflow, the meter still carries out the measurement.
- The meter controls currently the value of the introduced parameter at the moment. In case when the introduced value overflows the upper range given in the table 1, the meter will make automatically the change into the maximal value. Similarly, in case when the introduced value overflows the lower change range given in the table 1, the meter will make automatically the change into the minimal value.

5.4.6 Display Format

The N30H meter adapts automatically the display format (precision) to the value of measured quantity. So that the function could be fully used, one must choose the format 0.0000, then the meter will display the measured value with the possible highest accuracy. This function does not operate for the time display, where the format is set automatically. The current time (HOUr mode) is displayed in the 24 hours' format, in the form hh.mm, where hh – current time, and mm – current minute..

5.5. Manufacturer's Parameters

Standard settings of the N30U meter are presented in the table 8. These settings can be restored by means of the meter menu through the choice of the option **Set** from the menu **Ser**.

Table 7

Parameter symbol	Level in the matrix	Standard value
tYP1	1	500U
Cnt1	1	1
indCP	2	no
H0	2	0
Y0	2	0
H1	2	100
Y1	2	100
...	...	...
Hn	2	(n-1)*100
Yn	2	(n-1)*100
d_P	3	0000.0
CoLdo	3	grEEn
CoLbE	3	orAng
CoLuP	3	rEd
CoLLo	3	50.00
CoLHi	3	80.00
ovrLo	3	-19999
ovrHi	3	99999
P_A1, P_A2, P_A3, P_A4	4, 5, 6, 7	InP1
tYP1, tYP2, tYP3, tYP4	4, 5, 6, 7	h-off
PrL1, PrL2, PrL3, PrL4	4, 5, 6, 7	1000
PrH1, PrH2, PrH3, PrH4	4, 5, 6, 7	2000

dLY1, dLY2, dLY3, dLY4,	4, 5, 6, 7	0
LEd1, LEd2, LEd3, LEd4	4, 5, 6, 7	oFF
P_An	8	InP1
tYPA	8	0_10U
AnL	8	0
AnH	8	99999
bAud	8	9.6
prot	8	r8n2
Addr	8	1
SEt	9	no
SEC	9	0
HOUR	9	not defined
unit	9	off
tESt	9	off

6. RS-485 INTERFACE

N30H programmable digital meters have a serial link in RS-485 standard for the communication in computer systems and with other devices fulfilling Master function. An asynchronous communication character protocol MODBUS has been implemented on the serial link. The transmission protocol describes ways of information exchange between devices through the serial link.

6.1. Connection Way of the Serial Interface

The RS-485 standard allows to a direct communication of 32 devices on a single serial link of 1200 m long (at baud rate 9600 b/s). For the connection of a higher quantity of devices, it is necessary to apply additional intermediate-separating systems (e.g. PD51 converter).

The lead wire of the interface line is presented on the fig. 4. To obtain a correct transmission, it is necessary to connect lines A and B in parallel with their equivalents in other devices. The connection must be made through a shielded wire. The wire shield must be connected to the protection terminal in the nearest possible neighbourhood of the meter (connect the shield to a single point to the protection terminal).

The GND line serves to the additional protection of the interface line at long connections. Then, one must connect GND signals of all devices to the RS-485 bus.

To obtain the connection to the computer, a RS-485 interface card or an appropriate converter is indispensable, e.g. PD51 or PD10.

The connection way of devices is shown on the fig. 13

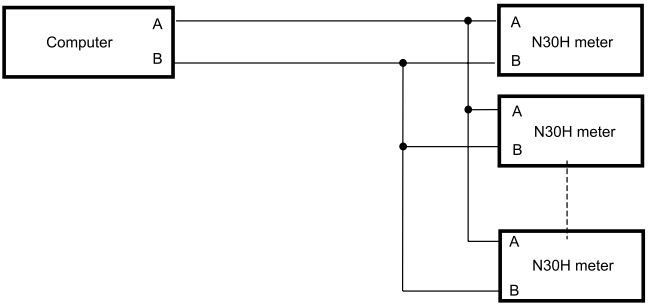

Fig. 13. Connection way of the RS-485 interface

The designation of transmission lines for the card in the PC computer depends on the card producer.

6.2. Description of the MODBUS Protocol Implementation.

The implemented protocol is in accordance with the PI-MBUS-300 Rev G of Modicon Company specification.

Set of the serial link parameters of N30U meters in MODBUS protocol:

- meter address: 1...247,
- baud rate: 4800, 9600, 19200, 38400, 57600, 115200 bit/s,
- work mode: RTU with a frame in formats: 8N2, 8E1, 8O1, 8N1,
- maximal time to start the response : 100 ms.

The parameter configuration of the serial link consists on the settlement of the baud rate (**bAUd** parameter), device address (**Addr** parameter), and the format of the information unit (**Prot** parameter).

Notice:

Each meter connected to the communication network must have:

- unique address, different from addresses of other devices connected to the network,
- identical baud rate and type of information unit.

6.3 Description of Applied Functions

Following functions of the MODBUS protocol have been implemented in the N30U meter:

- 03 – Readout of n-registers.
- 04 – Readout of input n-registers.
- 06 – Write of a single register.
- 16 – Write of n-registers.
- 17 – Identification of the slave device.

6.4 Register Map

The register map of the N30H meter is presented below.

Notice:

All given addresses are physical addresses. In some computer programs logical addressing is applied, then addresses must be increased of 1.

Table 8

Range of addreses	Value type	Description
4000-4049	integer (16 bits)	Value placed in a 16-bit register.
7000-7025	float (32 bits)	Value placed in two successive 16-bit registers. Registers include the same data as 32-bit register from the area 7500. Registers are only for readout.
7200-7363	float (32 bits)	Value placed in two successive 16-bit registers. Registers include the same data as 32-bit register from the area 7600. Registers can be read out and written.
7500-7512	float (32 bits)	Value placed in a 32-bit register. Registers are only for readout.
7600-7663	float (32 bits)	Value placed in a 32-bit register. Registers can be read out and written.

6.5. Registers for Write and Readout

Table 9

The value is placed in 16-bit registers	Symbol	write (w)/ readout (r)	Range	Description	
4000	**tYP1**	w/r	0...4	Input type	
				Value	
				0	500U - voltage measurement in the 500 V range
				1	100U - voltage measurement in the 100 V range
				2	5A - voltage measurement in the 5 A range
				3	1A - voltage measurement in the1 A range
				4	HoUr -current time
4001		w/r		Reserved	
4002		w/r		Reserved	
4003	**Cnt**	w/r	1...3600	Measurement time expressed in seconds. This time defines the averaging time of the measured value. The displayed value is the mean value calculated from the Cnt1 period.	
4004		w/r		Reserved	
4005		w/r		Reserved	
4006		w/r		Reserved	
4007		w/r		Reserved	
4008	**IndCp**	w/r	1...21	Number of points of the individual characteristic. For the value 1, the individual characteristic is switched off. Segments of the individual characteristic are defined by parameters Xn and Yn, where n – point number..	
4009	**d_P**	w/r	0...4	Minimal position of the decimal point when displaying the measured value.	
				Value	**Description**
				0	0.0000
				1	00.000

				2	000.00
				3	0000.0
				4	00000
4010	**CoLdo**	w/r	0...2	Display colour when the displayed value is less than **coLLo**	
				Value	**Description**
				0	red
				1	green
				2	orange
4011	**CoLbE**	w/r	0...2	Display colour when the displayed value is higher than **coLLo** and less than **CoLHi**	
				Value	**Description**
				0	red
				1	green
				2	orange
4012	**CoLUp**	w/r	0...2	Display colour when the displayed value is higher than **coLHi**	
				Value	**Description**
				0	red
				1	green
				2	orange
4013	**P_a1**	w/r	0, 1	Input quantity controlling the alarm	
				Value	**Description**
				0	Main input
				1	Clock
4014	**tyP1**	w/r	0...5	Type of alarm 1 (description - fig. 6)	
				Value	**Description**
				0	n-on
				1	n-off
				2	on
				3	off
				4	h-on
				5	h-off
4015	**dLY1**	w/r	0...900	Delay of alarm 1 (in seconds)	

4016	**LEd1**	w/r	0...1	Support of alarm 1 signalling	
				Value	**Descritpion**
				0	Support switched off
				1	Support switched on
4017	**P_a2**	w/r	0, 1	Input quantity controlling the alarm	
				Value	**Description**
				0	Main input
				1	Clock
4018	**tyP2**	w/r	0...5	Type of alarm 2 (description - fig. 6)	
				Value	**Description**
				0	n-on
				1	n-off
				2	on
				3	off
				4	h-on
				5	h-off
4019	**dLY2**	w/r	0...900	Delay of alarm 2 (in seconds)	
4020	**LEd2**	w/r	0...1	Support of alarm 2 signalling	
				Value	**Description**
				0	Support switched off
				1	Support switched on
4021	**P_a3**	w/r	0, 1	Input quantity controlling the alarm	
				Value	**Description**
				0	Main input
				1	Clock
4022	**tyP3**	w/r	0...5	Type of alarm 3 (description - fig. 6)	
				Wartość	**Opis**
				0	n-on
				1	n-off
				2	on
				3	off
				4	h-on
				5	h-off
4023	**dLY3**	w/r	0...900	Delay of alarm 3 (in seconds)	

4024	**LEd3**	w/r	0...1	Support of alarm 3 signalling	
				Value	**Description**
				0	Support switched off
				1	Support switched on
4025	**P_a4**	w/r	0, 1	Input quantity controlling the alarm	
				Value	**Description**
				0	Main input
				1	Clock
4026	**tyP4**	w/r	0...5	Type of alarm 4 (description - fig. 6)	
				Value	**Description**
				0	n-on
				1	n-off
				2	on
				3	off
				4	h-on
				5	h-off
4027	**dLY4**	w/r	0...900	Delay of alarm 4 (in seconds)	
4028	**LEd4**	w/r	0...1	Support of alarm 4 signalling	
				Value	**Description**
				0	Support switched off
				1	Support switched on
4029	**P_an**	w/r	0, 1	Input quantity, which the analog output has to react on.	
				Value	**Description**
				0	Main input
				1	Clock
4030	**tYPa**	w/r	0...2	Type of analog output	
				Value	**Description**
				0	Voltage input 0...10 V
				1	Current input 0...20 mA
				2	Current input 4...20 mA
4031	**bAud**	w/r	0...5	Baud rate	
				Value	**Description**
				0	4800 bit/s
				1	9600 bit/s
				2	19200 bit/s

				3	38400 bit/s
				4	57600 bit/s
				5	115200 bit/s
4032	**prot**	z/o	0...3	Transmission mode	
				Value	**Description**
				0	RTU 8N2
				1	RTU 8E1
				2	RTU 8O1
				3	RTU 8N1
4033	**Addr**	z/o	0...247	Meter address. The write of the value 0 causes the inerface switching off.	
4034	**sAvE**	z/o	0...1	Update transmission parameters. Causes the application of introduced RS-485 interface settings.	
4035	**SEt**	z/o	0...1	Write of standard parameters	
				Value	**Description**
				0	without changes
				1	set standard parameters
4036	**SEc**	z/o	0...6000	Password for parameters	
				Value	**Description**
				0	without password
				...	Entry in parameters preceded by a request about the password
4037	**hour**	z/o	0...2359	Current time	
				This parameter occurs in the ggmm format,where: gg - means hours, mm – means minutes. The introduction of a wrong hour will cause the setting 23, however the introduction of wrong minutes will generate the setting of the value 59.	
4038	**unit**	z/o	0, 1	Switch on/off the unit backlight	
				Value	**Description**
				0	Highlighting switched off
				1	Highlighting switched on
4039		z/o	0, 1	Extreme values' deletion. Writing in "1" to the register will cause the deletion of the minimum and maximum values	
...	**...**	...	...	Reserved	
4048	Status1	z/o	0...65535	Meter status. Describes the current state of the meter. Successive bits present data of the event. The bit set on 1 means, that the event took place. Events can be only erased..	
				Bit 15	Break of the supply
				Bit 14	Re-set of the RTC clock.

				Bit 13	Not used
				Bit 12	Lack of communication with data memory
				Bit 11	Wrong settings
				Bit 10	Manufacturer's setting restored
				Bit 9	Lack of measured values in data memory
				Bit 8	Not used
				Bit 7	Output plate was detected
				Bit 6	Output plate - error or lack of calibration
				Bit 5	Not used
				Bit 4	Not used
				Bit 3	Wrong configuration of the individual character.
				Bit 2	Not used
				Bit 1	Not used
				Bit 0	Not used
4049	Status2	w/r		Meter status. Describes the current state of the meter. Successive bits present data of the event. The bit set on 1 means, that the event took place. Events can be only deleted.	
				Bit 15	Not used
				Bit 14	Not used
				Bit 13	Not used
				Bit 12	Not used
				Bit 11	Not used
				Bit 10	Not used
				Bit 9	Not used
				Bit 8	Not used
				Bit 7	LED4 - Signalling of alarm No.4
				Bit 6	LED3 - Signalling of alarm No.3
				Bit 5	LED2 - Signalling of alarm No.2
				Bit 4	LED1 - Signalling of alarm No.1
				Bit 3	Status of the alarm relay No.4
				Bit 2	Status of the alarm relay No.3
				Bit 1	Status of the alarm relay No.2
				Bit 0	Status of the alarm relay No.1

The value is placed in two successive 16-bit registers. These registers include the same data as 32-bit registers from the area 7600.	The value is placed in 32-bit registers	Sym-bol	write (w) /rea-dout (r)	Range	Description
7200	7600	**coLLo**	w/r	-19999...99999	Lower threshold of the display colour change
7202	7601	**coLHI**	w/r	-19999...99999	Upper threshold of the display colour change
7204	7602	**ovrLo**	w/r	-19999...99999	Lower threshold of the display narrowing
7206	7603	**ovrHI**	w/r	-19999...99999	Upper threshold of the display narrowing
7208	7604	**PrL 1**	w/r	-19999...99999	Lower threshold of alarm 1
7210	7605	**PrH 1**	w/r	-19999...99999	Upper threshold of alarm 1
7212	7606	**PrL 2**	w/r	-19999...99999	Lower threshold of alarm 2
7214	7607	**PrH 2**	w/r	-19999...99999	Upper threshold of alarm 2
7216	7608	**PrL 3**	w/r	-19999...99999	Lower threshold of alarm 3
7218	7609	**PrH 3**	w/r	-19999...99999	Upper threshold of alarm 3
7220	7610	**PrL 4**	w/r	-19999...99999	Lower threshold of alarm 4
7222	7611	**PrH 4**	w/r	-19999...99999	Upper threshold of alarm 4
7224	7612	**AnL**	w/r	-19999...99999	Lower threshold of analog output
7226	7613	**AnH**	w/r	-19999...99999	Upper threshold of analog output
7228	7614		w/r	-19999...99999	Reserved
7230	7615		w/r	-19999...99999	Reserved
7232	7616		w/r	-19999...99999	Reserved
7234	7617		w/r	-19999...99999	Reserved
7236	7618		w/r	-19999...99999	Reserved
7238	7619		w/r	-19999...99999	Reserved

7240	7620		w/r	-19999...99999	Reserved
7242	7621		w/r	-19999...99999	Reserved
7244	7622	**H1**	w/r	-19999...99999	Point of the individual charachteristic Point No.1.
7246	7623	**Y1**	w/r	-19999...99999	Expected value for the point No. 1.
7248	7624	**H2**	w/r	-19999...99999	Point of the individual charachteristic Point No. 2.
7250	7625	**Y2**	w/r	-19999...99999	Expected value for the point No. 2.
7252	7626	**H3**	w/r	-19999...99999	Point of the individual charachteristic Point No. 3.
7254	7627	**Y3**	w/r	-19999...99999	Expected value for the point No. 3.
7256	7628	**H4**	w/r	-19999...99999	Point of the individual charachteristic Point No.4.
7258	7629	**Y4**	w/r	-19999...99999	Expected value for the point No. 4.
7260	7630	**H5**	w/r	-19999...99999	Point of the individual charachteristic Point No. 5.
7262	7631	**Y5**	w/r	-19999...99999	Expected value for the point No. 5.
7264	7632	**H6**	w/r	-19999...99999	Point of the individual charachteristic Point No. 6.
7266	7633	**Y6**	w/r	-19999...99999	Expected value for the point No. 6.
7268	7634	**H7**	w/r	-19999...99999	Point of the individual charachteristic Point No. 7.
7270	7635	**Y7**	w/r	-19999...99999	Expected value for the point No. 7.
7272	7636	**H8**	w/r	-19999...99999	Point of the individual charachteristic Point No. 8.
7274	7637	**Y8**	w/r	-19999...99999	Expected value for the point No. 8.
7276	7638	**H9**	w/r	-19999...99999	Point of the individual charachteristic Point No. 9.
7278	7639	**Y9**	w/r	-19999...99999	Expected value for the point No. 9.
7280	7640	**H10**	w/r	-19999...99999	Point of the individual charachteristic Point No.10.
7282	7641	**Y10**	w/r	-19999...99999	Expected value for the point No. 10.
7284	7642	**H11**	w/r	-19999...99999	Point of the individual charachteristic Point No. 11.
7286	7643	**Y11**	w/r	-19999...99999	Expected value for the point No. 11.
7288	7644	**H12**	w/r	-19999...99999	Point of the individual charachteristic Point No. 12.

7290	7645	**Y12**	w/r	-19999...99999	Expected value for the point No. 12.
7292	7646	**H13**	w/r	-19999...99999	Point of the individual charachteristic Point No. 13.
7294	7647	**Y13**	w/r	-19999...99999	Expected value for the point No. 13.
7296	7648	**H14**	w/r	-19999...99999	Point of the individual charachteristic Point No. 14.
7298	7649	**Y14**	w/r	-19999...99999	Expected value for the point No. 14.
7300	7650	**H15**	w/r	-19999...99999	Point of the individual charachteristic Point No. 15.
7302	7651	**Y15**	w/r	-19999...99999	Expected value for the point No. 15.
7304	7652	**H16**	w/r	-19999...99999	Point of the individual charachteristic Point No. 16.
7306	7653	**Y16**	w/r	-19999...99999	Expected value for the point No. 16.
7308	7654	**H17**	w/r	-19999...99999	Point of the individual charachteristic Point No. 17.
7310	7655	**Y17**	w/r	-19999...99999	Expected value for the point No. 17.
7312	7656	**H18**	w/r	-19999...99999	Point of the individual charachteristic Point No. 18.
7314	7657	**Y18**	w/r	-19999...99999	Expected value for the point No. 18.
7316	7658	**H19**	w/r	-19999...99999	Point of the individual charachteristic Point No. 19.
7318	7659	**Y19**	w/r	-19999...99999	Expected value for the point No. 19.
7320	7660	**H20**	w/r	-19999...99999	Point of the individual charachteristic Point No. 20.
7322	7661	**Y20**	w/r	-19999...99999	Expected value for the point No. 20.
7324	7662	**H21**	w/r	-19999...99999	Point of the individual charachteristic Point No. 21.
7326	7663	**Y21**	w/r	-19999...99999	Expected value for the point No. 21.

6.6. Registers only for Readout

Table 11

The value placed In two successive 16-bit registers. These registers include the same data as 32-bit registers from the area 7500	The value is placed in 32-bit registers	Name	Write (w) / readout (r)	Unit	Name of the quantity
7000	7500	Identifier	O	—	Constant identifying the device. The value 187 means the N30H meter
7002	7501	Status	O	—	Status is register describing the current state of the meter
7004	7502	Control	O	%	It is a register defining the control of the analog outpu
7006	7503	Minimum	O	—	Minimal value of the currently displayed value
7008	7504	Maximum	O	—	Maximal value of the currently displayed value
7010	7505	Displayed value	O	—	Currently displayed value
7012	7506		O	—	Current time
7014	7507		O		Reserved
7016	7508		O	—	Password of analog-to-digital transducer
7018	7509		O		Reserved
7020	7510		O		Measured value – not recalculated In relation to the individual characteristic, a.s.l.
7022	7511		O		Reserved
7024	7512		O		Reserved

7. SOFTWARE UPDATING

The N30H meters (from the version 1.09) in version with RS-485 interface come with the implemented function that allows for updating the software from a PC with LPCon or eCon software. Free LPCon program and the updating files are available on our website www.lumel.com.pl. In order to update software the RS-485 converter on USB, such as PD10 converter must be connected to the computer.

a)

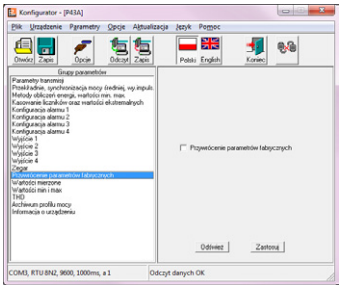

b)

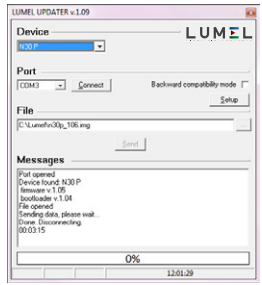

Fig. 13. The view of program window: a) LPCon, b) **L**umel **U**pdater (LU)

Note! After updating the software the manufacturer's settings for the transducer ought to be set, therefore it is advisable to store the meters parameters before its updating using LPCon or eCon software.

After LPCon has been started, one ought to set serial port, baut rate, mode and the transducer address in *Options*. Then choose the N30H meter from the menu *Devices* and click the icon *Read* in order to read all set parameters (necessary for their later restoration). After selecting from the menu *Updating* the option *Device software updating*, the Lumel Updater (LU) window opens – Fig. 13 b. Press *Connect*. The information window *Messages* contains information on the updating process. At the correctly opened port, the message *Port opened* displays.

Entering the updating mode in the meter is carried out remotely by LU program (based on the settings in LPCon - adres, mode, baud rate, port Com) or by switching on the meter power supply with pressed key ⏎. Pulsating of the meter state diode AL1 in green signals readiness for updating, whereas the LU program displays the message *Device found* and the name and version of the program of the conneted device. One should press the button ... and indicate the meter updating file. At the correctly opened file, the information *File opened* displays. One should press *Send* button. After updating being successfully completed the meter switches to normal work, whereas the information window displays *Done* and the duration time of the updating. After the LU window closure, one should go to the parameters group *Restoring manufacturer's settings*, mark the option and press *Apply* button. Then press the icon *Save* in order to save readout initially set parameters. Current software version may also be checked by reading the meter welcome messages after switching on the power supply.

Note! Switching the supply off during the software updating process may result in permenent damage of the meter!

8. ERROR CODES

After switching the meter on to the network or during the work, messages about errors can appear.
Messages about errors and their reasons are presented below. .

Table 12

Error message	Description
	Overflow of the upper value of the measuring range value or the programmed indication range.
	Overflow of the lower value of the measuring range value or the programmed indication range.
ErFrt	Communication error with the data memory. One must contact the service workshop.
ErPar	Parameter error. Wrong configuration data. Manufacturer's settings will be restored after pressing any push.
ErdEF	Default settings have been restored. One must press any push to transit to a normal work.
ErFPL	Error of measured values stored by the meter (measured value, maximal and minimal values). One must press any push to transit to a normal work. After pressing the push during 1 sec, the ErdEF message will be displayed.
ErCAo	Lack of calibration of analog outputs. One must press any push to transit to the normal work. Analog outputs will not be serviced. One must contact the service workshop.
ErCOd	Erroneous access code to meter parameters. The error appears in the moment of giving a wrong access code to meter parameters (only in case when meter parameters are protected by a password).

8. TECHNICAL DATA

Measuring ranges.

Table 13

Kind of input	Indication of range	class
500 V	-600...600 V	0.1% of the range
100 V	-130...130 V	0.1% of the range
5 A	-6...6 A	0.1% of the range ± 5 mA
1 A	-2...2 A	0.1% of the range ± 1 mA
Current time	00.00...23.59	0.5 seconds/24h

Relay outputs:
- relays, NO voltageless contacts
  load capacity 250 V~/0.5A~
- relays, switched voltageless contacts
  load capacity 250 V~/0.5A~ (option)

Analog outputs (option):
- programmable, current 0/4...20 mA
  load resistance ≤ 500 **Ω**
- programmable, current 0..10 V
  load resistance ≥ 500 **Ω**

Alarm output OC (option): output of OC type, passive npn, 30 V d.c./30 mA.

Serial interface: RS-485 (option)

Transmission protocol: MODBUS RTU

Error of analog output: 0.2% of the set range.

Protection grade ensured by the casing:

frontal side IP65
terminal side IP10

Weight:	< 0.2 kg
Dimensions:	96 × 48 × 93 mm

Reference Conditions and Rated Operating conditions:

- supply voltage	85..253 V d.c./a.c. 40..400Hz or 20..40 V a.c. (40...400 Hz), 20...60 V d.c. 40..400Hz
- ambient temperature	-25..23..+55°C
- storage temperature	-33..+70°C
- reltive air humidity	25..95% (inadmissible vapour condensation)
- work position	any

Additional errors:

- from temperature changes:	for analog inputs and outputs 50% of the class/10 K

Standards fulfilled by the meter:

Electromagnetic compatibility:

- Noise immunity acc. to EN 61000-6-2
- Noise emission acc. to EN 61000-6-4

Safety requirements:

Acc. to the EN61010-1 standard:

- isolation between circuits: basic,
- installation category: III,
- pollution level: 2,
- maximal phase-to-earth working voltage:
  - 300 V for the supply circuit,
  - for the measuring input 600 V for analog input signals – cat. II (300 V – cat. III),
  - 50 V for remaining circuits.
- altitiude above sea level < 2000 m.

9. ORDER CODES

Table 14

DIGITAL PANEL METER N30H -	X	X	XX	XX	X	X
Supply:						
85... 253 V a.c. (40...400 Hz) or d.c. **1**						
20... 40 V a.c. (40...400 Hz), 20..60 V d.c. **2**						
Additional outputs:						
lack **0**						
OC output, RS-485, analog outputs **1**						
OC output, RS-485, analog outputs, switched-over relay outputs **2**						
Unit:						
unit code acc. to the table 15 ..... **XX**						
Version:						
standard **00**						
custom-made* ..... **XX**						
Language:						
Polish ..... **P**						
English ..... **E**						
Other* ..... **X**						
Acceptance tests:						
without extra requirements **0**						
with an extra quality inspection certificate **1**						
Acc. to customer's request* ..... **X**						

* - after agreeing with the Manufacturer

Order example

The code **N30H - 1 0 01 00 E 0** - means

N30H - programmable N30H panel digital meter
- **1** - supply: 85...253 V a.c./d.c
- **0** - lack of additional outputs
- **01** - unit „V" acc. to the table 2
- **00** - standard version
- **E** - English language
- **0** - without extra requirements

Code of the highlighted unit Table 15

Code	Unit	Code	Unit
00	Lack of unit	29	%
01	V	30	%RH
02	A	31	pH
03	mV	32	kg
04	kV	33	bar
05	mA	34	m
06	kA	35	l
07	W	36	s
08	kW	37	h
09	MW	38	m^3
10	var	39	obr
11	kvar	40	szt
12	Mvar	41	imp
13	VA	42	rps
14	kVA	43	m/s
15	MVA	44	l/s
16	kWh	45	obr/min
17	MWh	46	rpm
18	kvarh	47	mm/min
19	Mvarh	48	m/min
20	kVAh	49	l/min
21	MVAh	50	m^3/min
22	Hz	51	szt/h
23	kHz	52	m/h
24	Ω	53	km/h
25	kΩ	54	m^3/h
26	°C	55	kg/h
27	°F	56	l/h
28	K	XX	On order 1)

1) - after agreeing with the Manufacturer

10. MAINTENANCE AND GUARANTEE

The N30H digital panel meter does not require any periodical maintenance.

In case of some incorrect operations:

1. **From the Shipping Date, During the Period Given in the Annexed Guarantee Card:**
   One should take the meter down from the installation and return it to the Manufacturer's Quality Control Dept. If the meter has been used in compliance with the instructions, the Manufacturer warrants to repair it free of charge.

2. **After the Guarantee Period:**
   One should turn over the meter to repair it in a certified service workshop.The disassembling of the casing causes the cancellation of the granted guarantee. Spare parts are available for the period of five years from the date of purchase.

Our policy is one of continuous improvement and we reserve the right to make changes in design and specifications of any products as engineering advances or necessity requires and revise the above specifications without notice.

LUMEL
EVERYTHING COUNTS

LUMEL S.A.
ul. Sulechowska 1, 65-022 Zielona Góra, POLAND
tel.: +48 68 45 75 100, fax +48 68 45 75 508
www.lumel.com.pl,

Export department:
tel.: (+48 68) 45 75 139, 45 75 233, 45 75 321, 45 75 386
fax.: (+48 68) 32 54 091
e-mail: export@lumel.com.pl

N30H-09A