N30H DIGITAL PANEL METER



- Measurement: current and d.c. voltage up to 5 A and 600 V.
- Three-colour display (14 mm high), programmed in three intervals of the measured value.
- Meter programming from the keyboard or through the RS-485 interface by means of the free delivered eCon software.
- Four alarm outputs with signalling by LED diodes, operating in 6 different modes.
- Conversion of any measured value into a 0/4...20 mA, or 0...10 V analog signal.
- Storage of minimal and maximal values for all measured quantities.
- 21-point individual characteristic for the measured value.

Features:

three-colour display | eCon | MOD BUS | RTC | 21 points charact. | Password protection | IP65

Inputs:

DC

Outputs:

0 .. 20 mA | 0..10 V | 2x | 2x | RS 485

Galvanic isolation:

Supply | RS 485

Example of Application

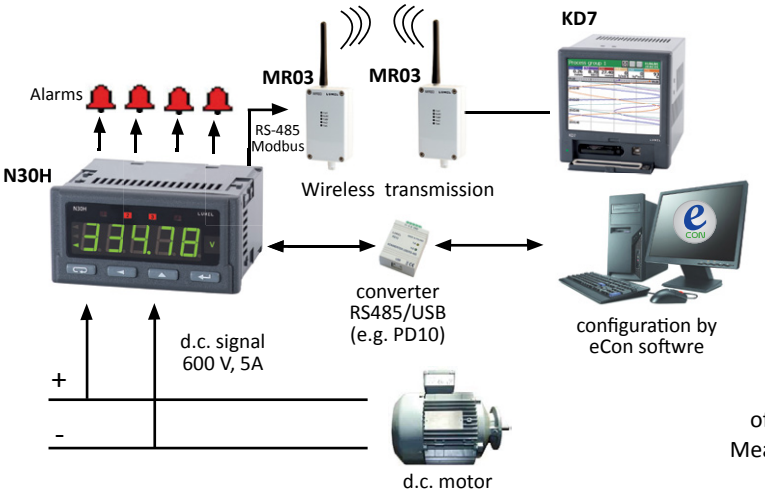

Measurement and recording of d.c. motor voltage and current. Measured data are transmitted to the recorder via radio modules.

Inputs

Input kind	Maximal measuring range	Class
+/- 500 V d.c.	-600...600 V d.c.	0.1
+/- 100 V d.c.	-130...130 V d.c.	0.1
+/- 5 A d.c.	-6...6 A d.c.	0.1
+/- 1 A d.c.	-2...2 A d.c.	0.1
Current time	00.00..23.59	0.5 second/24 h

Outputs

Output kind	Properties	Remarks
Relay output	• 2 x relays, voltageless NO contacts, load-carrying capacity 250 V a.c./ 0.5 A a.c. • 2 x relays, voltageless switched contacts, load-carrying capacity 250 V a.c./ 0.5 A a.c.	
Analog output	• current programmable 0/4...20 mA, load resistance ≤ 500 Ω • voltage programmable 0...10 V, load resistance ≥ 500 Ω • Error of output: 0.2% of the set range	Additional error from temperature changes: **50% of class/10K**
OC output	• OC type, passive npn, 30 V d.c./30 mA	voltage output

Digital Interfaces

Interface type	Transmission protocol	Modes	Baud rates
RS-485	MODBUS RTU	8N2, 8E1, 8O1, 8N1	4.8; 9.6; 19.2; 38.4, 57.6, 115.2 kbit/s

External Features

Readout field	5-digit LED display - indication range -19999...99999 digit height: 14 mm	three-colour display (colour changes depending on displayed value): red, green, orange
Weight	< 0.2 kg	
Overall dimensions	96 × 48 × 93 mm	Panel cut-out: $92^{+0,6} \times 45^{+0,6}$ mm
Protection grade (acc. to EN 60529)	from frontal side: IP65	from terminal side: IP 10

Export department:
+48 68 45 75 139/ 321 / 386

Fax: +48 68 32 54 091
e-mail: export@lumel.com.pl

LUMEL S.A.
ul. Sulechowska 1
65-022 Zielona Góra
POLAND
WWW.LUMEL.COM.PL

N30H DIGITAL PANEL METER

Rated Operating Conditions

Supply voltage	85...253 V a.c. (40...400 Hz) or d.c., 20...40 V a.c. (40...400 Hz) or 20...60 V d.c.	
Temperature	ambient: -25...23...55°C	storage: -33...70°C
Relative humidity	25...95%	condensation inadmissible
Operating position	any	
External magnetic field	0...400 A/m	

Safety And Compatibility Requirements

Electromagnetic compatibility	Noise immunity	acc. to EN 61000-6-2
	Noise emissions	acc. to EN 61000-6-4
Isolation between circuits	basic	acc. to EN 61010-1
Pollution grade	2	
Installation category	III	
Maximal phase-to-earth working voltage	for the supply circuit: 300 V	
	for the measuring input 600 V for analog input signals - cat. II (300 V - cat. III)	
	for remaining circuit: 50 V	
Altitude above sea level	< 2000 m	

Connection Diagrams

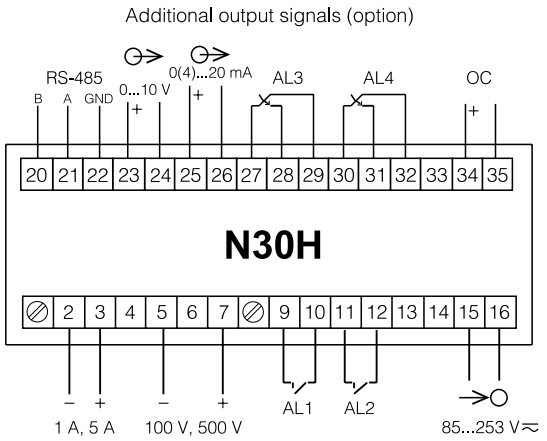

Fig. 1. Description of signals on connection terminals.

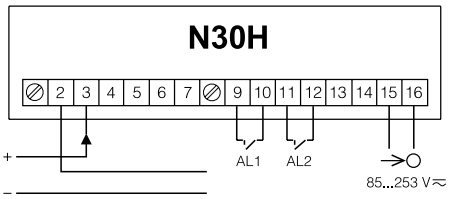

Fig. 2. Meter connection in the configuration for current measurement

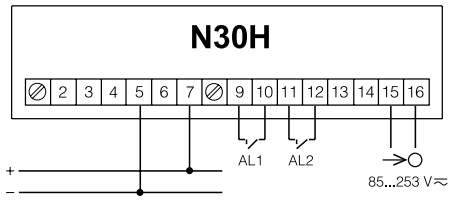

Fig. 3. Meter connection in the configuration for voltage measurement.

Ordering

Table 1. Ordering codes:

N30H -	X	X	XX	XX	X	X
Supply:						
85...253 V a.c. (40...400 Hz) or d.c.	1					
20...40 V a.c. (40...400 Hz) or 20...60 V d.c.	2					
Additional outputs:						
lack		0				
OC output, RS-485, analog outputs		1				
OC output, RS-485, analog outputs switched-over relay outputs		2				
Unit:						
unit code acc. to the table 2			XX			
Version:						
standard				00		
custom-made*				XX		
Language:						
Polish					P	
English					E	
other*					X	
Acceptance tests:						
without extra requirements						0
with an extra quality inspection certificate						1
acc. to customer's request*						X

Order example:

The code **N30H - 1 0 01 00 E 0** means

N30H - programmable N30H panel digital meter
1 - supply: 85...253 V a.c. (40...400 Hz) or d.c.
0 - lack of additional outputs
01 - unit "V" acc. to the table 2
00 - standard option
E -English language
0 - without extra requirements

Table 2. Codes of highlighted unit:

Code	Unit	Code	Unit	Code	Unit
00	lack of unit	20	kVAh	40	szt.
01	V	21	MVAh	41	imp
02	A	22	Hz	42	rps
03	mV	23	kHz	43	m/s
04	kV	24	Ω	44	l/s
05	mA	25	kΩ	45	obr/min
06	kA	26	°C	46	rpm
07	W	27	°F	47	mm/min
08	kW	28	K	48	m/min
09	MW	29	%	49	l/min
10	var	30	%RH	50	m^3/min
11	kvar	31	pH	51	szt./h
12	Mvar	32	kg	52	m/h
13	VA	33	bar	53	km/h
14	kVA	34	m	54	m^3/h
15	MVA	35	l	55	kg/h
16	kWh	36	s	56	l/h
17	MWh	37	h	XX	on order*
18	kvarh	38	m^3		
19	Mvarh	39	obr		

* - after agreeing with the manufacturer

Castel Maggiore (BO) 40013
Via Lirone 60/i

e-mail: info@eurotecsrl.com
Tel: +39 051/6321595
Website: www.eurotecsrl.com

C.F.: 04103780377
P.I.: 01596581205