EUROTEC
TECNOLOGIE IMPIANTISTICHE - AUTOMAZIONE - TELECONTROLLO

LUMEL
EVERYTHING COUNTS

N100
- POWER NETWORK ANALYZER

- Measurement of power network parameters in 3 or 4-wire, balanced or unbalanced systems.
- Two-color LED display (red, green).
- Four quadrant energy measurement.
- Indications taking into consideration programmed ratio values.
- Storage of minimal and maximal values.
- Backlit units of all measured quantities.
- Programmable number of pages and selection of displayed quantities on each of the 20 pages.
- Configurable analog and alarm outputs.
- Pulse output to control of the consumption of active energy (option).
- Pulse input to count the consumption of active energy from external counter.
- Digital RS-485 interface with MODBUS protocol.
- Archiving data in the internal memory file system memory 8 GB (option).
- Ethernet interface 10/100 BASE-T (option)
  - protocol: MODBUS TCP/IP, HTTP, FTP,
  - services: www server, ftp server, DHCP client.
- Battery support of RTC.

Electrical Safety CAT III

CE

EXAMPLE OF APPLICATION

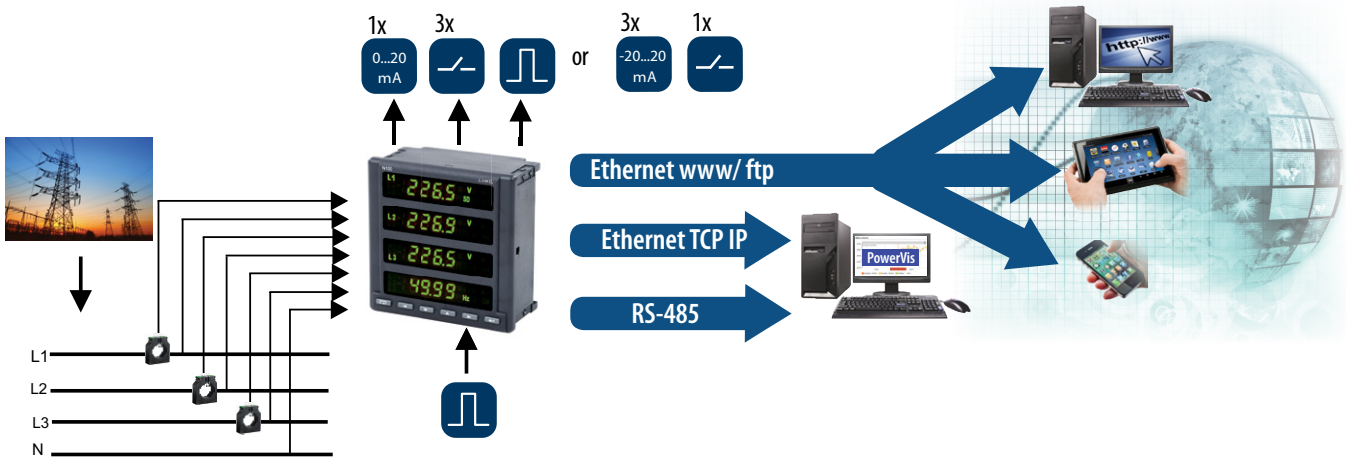

MEASUREMENT OF POWER NETWORK PARAMETERS

- phase voltages U_1, U_2, U_3
- phase-to-phase voltages U_{12}, U_{23}, U_{31}
- phase currents I_1, I_2, I_3
- phase active powers P_1, P_2, P_3
- phase reactive powers Q_1, Q_2, Q_3
- phase apparent powers S_1, S_2, S_3
- phase active power factors Pf_1, Pf_2, Pf_3
- phase reactive /to active power factors $tg\varphi_1$, $tg\varphi_2$, $tg\varphi_3$
- active, reactive and apparent 3-phase power P, Q, S
- 3-phase active, reactive and apparent powers Pf, $tg\varphi$
- frequency f
- average 3-phase voltage U_S
- average phase-to-phase voltage U_{mf}
- average 3-phase current I_S
- average active power e.g. 15 min. P_{demand}
- avarage apparent power S_{demand}
- avarage current I_{demand}
- 3-phase active, reactive and apparent energy EnP, EnQ, EnS
- active energy from external counter EnPE,
- total harmonic distortion factors for phase voltages and phase currents THD_{U1}, THD_{U2}, THD_{U3}, THD_{I1}, THD_{I2}, THD_{I3}
  and for 3-phase voltage and 3-phase current THD_U, THD_I
- harmonics of phase voltages and currents – up to the 51 th

N100 - POWER NETWORK ANALYZER

LUMEL
EVERYTHING COUNTS

FEATURES

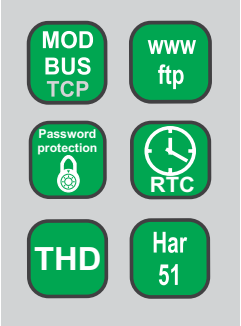

INPUTS

OUTPUTS

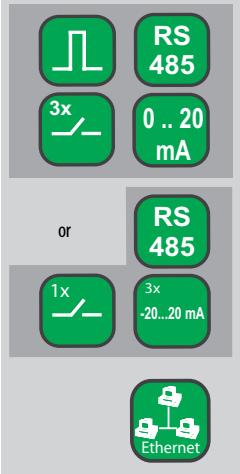

GALVANIC ISOLATION

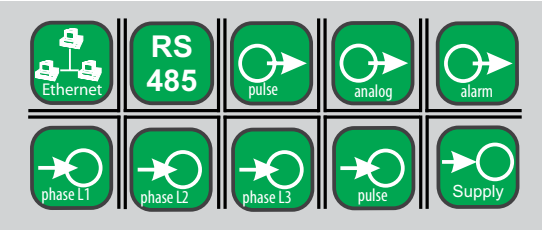

TECHNICAL DATA

MEASURED PARAMETERS AND MEASURING RANGES

Measured value	Measuring range	L1	L2	L3	Σ	Class (*) / Basic error (*) class relative to the measured value acc. to EN61557-12
Current 1/5 A 1 A~ 5 A~	0.010 ..0.100..1.200 A (tr_I=1) 0.050 ..0.500.. 6.000 A (tr_I=1) ...20.00 kA (tr_I≠1)	•	•	•		Class 0.2
Voltage L-N 57.7 V~ 230 V~ 400 V~	5.7..11.5 ..70.0 V (tr_U=1) 23.0..46 .. 276.0 V (tr_U=1) 40.0..80 .. 480.0 V (tr_U=1) ...480.0 kV (tr_U≠1)	•	•	•		Class 0.2
Voltage L-L 100 V~ 400 V~ 690 V~	10,0 ..20..120,0 V (tr_U=1) 40,0..80 .. 480,0 V (tr_U=1) 69,0..138 .. 830,0 V (tr_U=1) ...830,0 kV (tr_U≠1)	•	•	•		Class 0.5
Active power P_i, average active power P_{dt}	.. (-)1999.9 W ..(-)1999.9 MW (tr_U≠1,tr_I≠1)	•	•	•	•	Class 0.5
Reactive power Q_i	.. (-)1999.9 Var ..(-)1999.9 MVar (tr_U≠1,tr_I≠1)	•	•	•	•	Class 2
Apparent power S_i, avarage apparent power S_{dt}	.. 1999.9 VA ..1999.9 MVA (tr_U≠1,tr_I≠1)	•	•	•	•	Class 0.5
Active energy EnP (imported or exported)	.. (-)1999.9 Wh ..(-)1999.9 MWh (tr_U≠1,tr_I≠1)				•	Class 0.5
Reactive energy EnQ (inductive or capacitive)	.. (-)1999.9 Varh ..(-)1999.9 MVarh (tr_U≠1,tr_I≠1)				•	Class 2
Apparent energy EnS	.. 1999.9 VAh ..1999.9 MVAh (tr_U≠1,tr_I≠1)				•	Class 0.5
Active power factor PF_i	-1.00 ..0 ..1.00	•	•	•	•	±0.01 of basic error
Coefficient $tg\varphi_i$ (ratio of reactive power to active power)	-1.20 ..0 ..1.20	•	•	•	•	±0.01 of basic error
Frequency f	45.00 ..65.00...500 (*) Hz	•	•	•	•	Class 0.2
Total harmonic distortion of voltage THDU, THDI	0.0 ..100.0 %					Class 5 50/60 Hz
Amplitudes of the voltage U_{h1} ...U_{h50}, and current I_{h1} . . . I_{h50} harmonics	0.0 ..100.0 %	•	•	•		Class 5 50/60 Hz

tr_I – current transformer ratio: 1..10000,
tr_U – voltage transformer ratio: 1..4000;
(*) – for frequences 65 .. 400 Hz phase voltages required are greater than 45% U_n
– for frequences 400 .. 500 Hz phase voltages required are greater than 85% U_n

OUTPUTS

Output type	Properties
Analog output	1 output: 0. . . 20 mA (4. . .20 mA) programmable or 3 outputs -20..0..20 mA programmable, depending on version. Basic errors 0.2%.
Relay output	3 or 1 relay programmable depending on version, voltageless NO contact, load capacity 250 V a.c./ 0.5 A a.c.
Active energy impulse output	1 OC (NPN), passive, supply voltage 18..27 V, (for version with 3 relay outputs, 1 analog output). Accuracy, as for the active energy.

INPUTS

Input type	Properties
Passive pulse input	0/12...36 V d.c. (for version with 3 relay outputs, 1 analog output)

DIGITAL INTERFACE

Type of interface	Transmission protocol	Remarks
RS-485	Modbus RTU 8N2,8E1,8O1,8N1 address 1..247	baud rate: 4.8, 9.6, 19.2 38.4, 57.6, 115.2 kbit/s
Ethernet 10/100 Base-T	Modbus TCP,HTTP,FTP	WWW server, FTP server, DHCP client

EXTERNAL FEATURES

Readout field	4 x 4 ½ LED digits, backlighted units	two-color (red, green), 14 mm
Overall dimensions	144 x 144 x 77 mm	panel cut-out: $138^{+0.5}$ x $138^{+0.5}$ mm
Weight	0.8 kg	
Protection grade	from frontal side: IP40	from terminal side: IP20

RATED OPERATING CONDITIONS

Supply voltage	85. . .253 V a.c. (40. . .400 Hz) or 90...300 V d.c.	power input ≤ 12 VA
Power consumption	in voltage circut ≤ 0.5 VA	in current circut ≤ 0.1 VA
Input signal	0...0.1...1.2 In; 0.1. . .0.2...1.2 Un for current, voltage, Pf_i, $tg\varphi_i$	• frequency 45...50...60. . .65 Hz, • sinusoidal signal (THD ≤ 8%)
Power factor	-1. . .0. . .1	
Preheating time	5 min.	
Temperature	-10. . .23. . .55°C, class K55 acc. to EN61557-12	
Humidity	0...40..65. . .95%	inadmissible condensation
Operating positions	any	
External magnetic field	≤ 40. . .400 A/m d.c.	≤ 3 A/m a.c. 50/60 Hz
Short duration overload	voltage input: 2 Un (5 sec.)	current input: 50 A (1 sec.)
Admissible crest factor	current: 2	voltage: 2
Additional error (in % of the intrinsic error)		from ambient temperature changes: < 50%/ 10°C

SAFETY AND COMPABILITY REQUIREMENTS

Electromagnetic compatibility	noise immunity	acc.to EN 61000-6-2
	noise emissions	acc.to EN 61000-6-4
Isolation insured by the casing	double	acc. to EN 61010-1
Isolation between circuits	basic	
Polution level	2	
Installation category	III	
Maximal phase-to-earth voltage	• for supply circuit and relay outputs: 300 V • for measuring input: 500 V • for circuit of RS-485, Ethernt, pulse input and output, analog outputs: 50 V	
Altitude a.s.l.	< 2000 m	

CONNECTION DIAGRAMS

Output signals connection

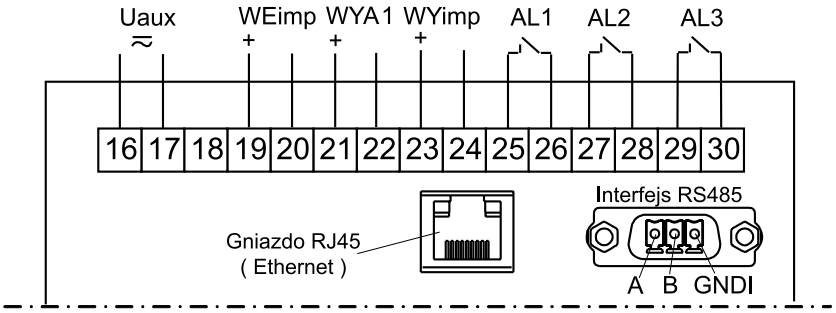

Version with 3 relay outputs, 1 analog output

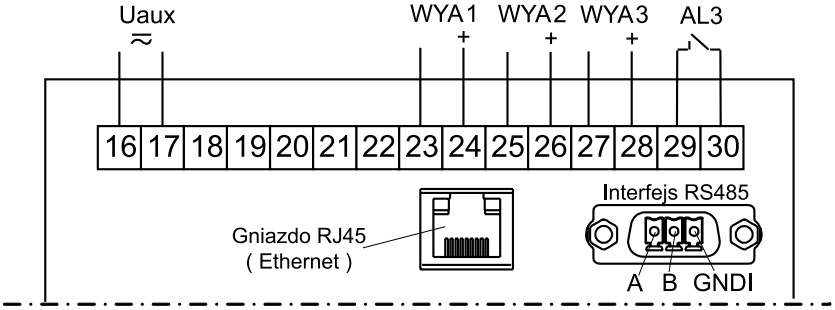

Version with 3 analog outputs, 1 relay output

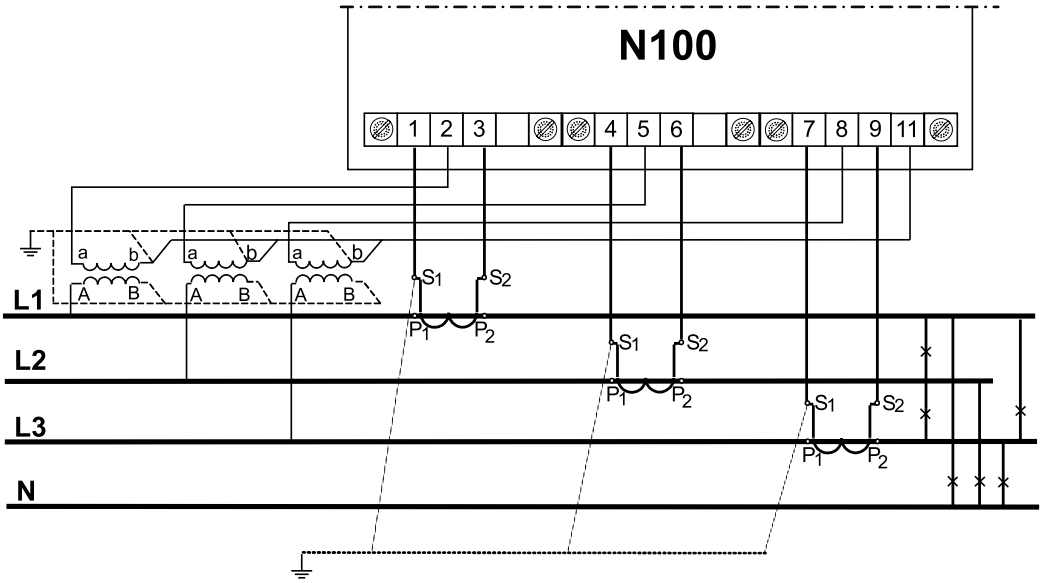

Indirect measurement in a four-wire network – connection of input signals

LUMEL
EVERYTHING COUNTS

ORDERING

Meter N100	X	X	X	XX	X	X
Input voltage (phase/phase-to-phase) Un:						
3 x 57.7/ 100 V	1					
3 x 230/ 400 V	2					
3 x 400/ 690 V	3					
Outputs:						
3 x relay, 1 x analog, 1x pulse input, 1 x pulse output		1				
3 x analog, 1 x relay		2				
Additional equipment:						
without Ethernet interface			0			
with Ethernet interface, internal memory			1			
Version:						
standard				00		
custom-made*				XX		
Language:						
Polish					P	
English					E	
other*					X	
Acceptance tests:						
without additional quality requirements						0
with an extra quality inspection certificate						1
acc.to customer's request						X

* - only after agreeing with the manufacturer

N100 meter has in standard:

- universal current input 1/ 5 A,
- interface RS-485,
- supply 85. . .253 V a.c. (40. . .400 Hz) or 90...300 V d.c.

Notice:

- for output version: 3 x relay, 1 x analog output, 1 x pulse input, 1 x pulse output – the analog output has the range of 0...20 mA.
- for output version: 3 x analog output, 1 x relay – the analog outputs have the range of -20..0..20 mA.
- For both version the analog outputs are programmable.

Order example:

The code: **N100 21100E0** means:

N100 - N100 meter,
2 - input voltage 3 x 230/400 V,
1 - 3 x relay, 1 x analog, 1x pulse input, 1 x pulse output
1 - with Ethernet, internal memory,
00 - standard version,
E - english version,
0 - without additional quality requirements.

N100 - POWER NETWORK ANALYZER

LUMEL
EVERYTHING COUNTS

SEE ALSO:

ND40 - power network analyzer/ recorder

RE92 - dual loop controller

P30U - universal transducer of temperature and standard signals

K5 - synchronization meter

N43 - rail mounted 3-phase power network meter

P43 - 3-phase transducer of power network parameters

ND1 - analyser of network parameters

Current transformers from 5 A up to 6 kA

Free **eCON** software

Castel Maggiore (BO) 40013
Via Lirone 60/i

e-mail: info@eurotecsrl.com
Tel: +39 051/6321595
Website: www.eurotecsrl.com

C.F.: 04103780377
P.I.: 01596581205

LUMEL
EVERYTHING COUNTS