MA16L, MA17L, MA19L, MA12L

MOVING-COIL METERS
AMMETERS and VOLTMETERS (with scale 240°)

MA16L

MA17L

MA19L

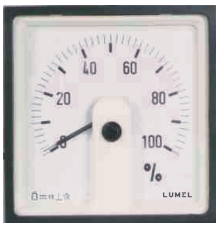
MA12L

APPLICATION

The panel meters type MA12L, MA16L, MA17L, MA19L are designed to measure current or DC voltage. Magnetoelectric meters with built-in rectifier type MA12L(P), MA17L(P), MA19L(P). are intended for measuring the effective currents and alternating current with sinusoidal waveform. Measurement of the current and voltage of the non-sinusoidal waveform is subject to a large error proportional to the degree of deformation of the waveform. what follows from the principle of measuring the rectifier device. which reacts to the average value of the straight-run. but it is calibrated like this. to indicate the effective value of the sinusoidal waveform. Where the noninusoidal course is appropriately characterized. this measurement error is calculated.

Therefore, the requirements for the influence of the shape of the curve for the medium-responsive instrument (straightened) are not specified in the standard EN 60051-2.

MA12L, MA16L, MA17L, MA19L meters are suitable for mounting in a panel of thickness not exceeding 25 mm in the holes according to Figures 2 and 4.

TECHNICAL DATA

Accuracy class 1.5

Type of scale 0...240°

Measurement ranges for DC and AC voltage and current meters and electrical data acc. table 1. 2. 3

Rated operating conditions:
- ambient temperature 5...23...55°C
- relative humidity 25...75%

Notice:
The above mentioned meters with a range of ... A / 60 mV, ... A / 150 mV can be made with interchangeable indicatin dial (scale) with any measuring range of the shunt. Other ranges can also be made with an interchangeable scale provided, that the measuring range of the meter will be the equivalent of the measuring range of the measuring transducer.

The interchangeable scale
The interchangeable scale is inserted and removed by the sliding gap in the top or side of the housing.

CATEGORIES OF METER CLIMATIC VERSIONS

Meters in the basic versions are designed for use in moderate climatic conditions. indoor. non-air conditioned rooms.

On customers' request. meters can be adapted to use in conditions of a dry or wet tropical climat in non-air conditioned rooms. Then. they are marked with the TIII symbol.

Requirements concerning safety acc. EN 61010-1 standard:
- installation category: III
- pollution level: 2
- maximal phase-earth working voltage: 660 V (for MA16L)
  1000 V (for MA12L, MA17L, MA19L)
- voltage test: 2kV

Electromagnetic compatibility:
- meters meet CE requirements
- noise immunity acc. to EN 61000-6-2
- noise emissions acc. to EN 61000-6-4

Electrical overload:
- long-term: 120% In, 120% Un
- short-time current measurement: 10 times for 5s: 1 overload
  10 times for 0.5s: 9 overloads
- short-term voltage measurement: 2 times for 5s: 1 overload
  2 times for 0.5s: 9 overloads

Impact resistance
- peak acceleration 15 g
- duration of impact 11 ms

Shock resistance
- range of vibration frequency 10-55-10Hz
- vibration amplitude 0.15mm (corresponds to 1.5g at 50 Hz)

Protection Grade acc. to EN 60529 ensured by:
- housing: standard IP 52
  on request **IP 65 - MA19L, MA17L, MA16L**
- terminals IP 20

Housing material thermoplastic, self-extinguishing plastic (UL 94V-O)

Glass material glass (in standard)
anti-reflective glass on request

ACCESSORIES

screw holders - 2 pcs (for MA16L, MA17L, MA19L) or 4 pcs (for MA12L).

LUMEL
EVERYTHING COUNTS

RANGE OF CURRENT AND CONTINUOUS VOLTAGE. INTERNAL RESISTANCE OR VOLTAGE DROP

Table 1

Frontal fame dimensions [mm]	**48 x 48**		**72 x 72**		**96 x 96**		**144 x 144**	
Scale lenght [mm]	70		106		142		230	
Weight [kg]	0.13		0.25		0.30		0.43	
Type	**MA16L**		**MA17L**		**MA19L**		**MA12L**	
Internal resistance or voltage drop								
Measuring range	zero on the side of the scale	zero in the middle of the scale	zero on the side of the scale	zero in the middle of the scale	zero on the side of the scale	zero in the middle of the scale	zero on the side of the scale	zero in the middle of the scale
100 µA	970 mV		600 mV		600 mV		600 mV	
150 µA	970 mV		400 mV		400 mV		400 mV	
250 µA	810 mV		140 mV		140 mV		140 mV	
400 µA	900 mV		540 mV		540 mV		540 mV	
600 µA	900 mV		540 mV		540 mV		540 mV	
1 mA	500 mV		37 mV		37 mV		37 mV	
1.5 mA	500 mV		196 mV		196 mV		196 mV	
2.5 mA	500 mV		196 mV		196 mV		196 mV	
4 mA	500 mV		196 mV		196 mV		196 mV	
5 mA	40 mV		196 mV		196 mV		196 mV	
6 mA	40 mV		196 mV		196 mV		196 mV	
10 mA	75 mV		196 mV		196 mV		196 mV	
15 mA	60 mV		11 mV		11 mV		11 mV	
20 mA	60 mV		60 mV		60 mV		60 mV	
25 mA	60 mV		11 mV		11 mV		11 mV	
40 mA	60 mV		60 mV		60 mV		60 mV	
60 mA	60 mV		60 mV		60 mV		60 mV	
100 mA	60 mV		60 mV		60 mV		60 mV	
150 mA	60 mV		60 mV		60 mV		60 mV	
250 mA	60 mV		60 mV		60 mV		60 mV	
400 mA	60 mV		60 mV		60 mV		60 mV	
600 mA	60 mV		60 mV		60 mV		60 mV	
1 A	60 mV		60 mV		60 mV		60 mV	
1.5 A	60 mV		60 mV		60 mV		60 mV	
2.5 A	60 mV		60 mV		60 mV		60 mV	
4 A	60 mV		60 mV		60 mV		60 mV	
6 A	60 mV		60 mV		60 mV		60 mV	
10 A	60 mV		60 mV		60 mV		60 mV	
15 A	60 mV		60 mV		60 mV		60 mV	
20 A	60 mV		60 mV		60 mV		60 mV	
25 A	60 mV		60 mV		60 mV		60 mV	
4...20 mA	60 mV		60 mV		60 mV		60 mV	
For the connection of the shunt								
... A/60 mV	200 Ω / V		200 Ω / V		200 Ω / V		200 Ω / V	
...A/150 mV	200 Ω / V		200 Ω / V		200 Ω / V		200 Ω / V	
60 mV	200 Ω / V		200 Ω / V		200 Ω / V		200 Ω / V	
100 mV	200 Ω / V		200 Ω / V		200 Ω / V		200 Ω / V	
150 mV	200 Ω / V		200 Ω / V		200 Ω / V		200 Ω / V	
250 mV	200 Ω / V		200 Ω / V		200 Ω / V		200 Ω / V	
400 mV	1000 Ω / V		1000 Ω / V		1000 Ω / V		1000 Ω / V	
600 mV	1000 Ω / V		1000 Ω / V	1000 Ω / V	1000 Ω /V	1000 Ω /V	1000 Ω / V	1000 Ω / V

Table 1

Typ	MA16L		MA17L		MA19L		MA12L	
Internal resistance or voltage drop								
Measuring range	zero on the side of the scale	zero in the middle of the scale	zero on the side of the scale	zero in the middle of the scale	zero on the side of the scale	zero in the middle of the scale	zero on the side of the scale	zero in the middle of the scale
1 V	1000 Ω / V		1000 Ω / V		1000 Ω / V		1000 Ω / V	
1.5 V	1000 Ω / V		1000 Ω / V		1000 Ω / V		1000 Ω / V	
2.5 V	1000 Ω / V		1000 Ω / V		1000 Ω / V		1000 Ω / V	
4 V	1000 Ω / V		1000 Ω / V		1000 Ω / V		1000 Ω / V	
6 V	1000 Ω / V		1000 Ω / V		1000 Ω / V		1000 Ω / V	
10 V	1000 Ω / V		1000 Ω / V		1000 Ω / V		1000 Ω / V	
15 V	1000 Ω / V		1000 Ω / V		1000 Ω / V		1000 Ω / V	
25 V	1000 Ω / V		1000 Ω / V		1000 Ω / V		1000 Ω / V	
40 V	1000 Ω / V		1000 Ω / V		1000 Ω / V		1000 Ω / V	
60 V	1000 Ω / V		1000 Ω / V		1000 Ω / V		1000 Ω / V	
100 V	1000 Ω / V		1000 Ω / V		1000 Ω / V		1000 Ω / V	
150 V	1000 Ω / V		1000 Ω / V		1000 Ω / V		1000 Ω / V	
250 V	1000 Ω / V		1000 Ω / V		1000 Ω / V		1000 Ω / V	
300 V	1000 Ω / V		1000 Ω / V		1000 Ω / V		1000 Ω / V	
400 V	1000 Ω / V		1000 Ω / V		1000 Ω / V		1000 Ω / V	
500 V	1000 Ω / V		1000 Ω / V		1000 Ω / V		1000 Ω / V	
600 V	1000 Ω / V		1000 Ω / V		1000 Ω / V		1000 Ω / V	

DC MEASURING RANGES WITH EXTERNAL SHUNTS

Table 2

1 A **1.5 A** **2.5 A** **4 A** **6 A** **10 A** **15 A** **25 A** **40 A** **60 A** **100 A** **150 A** **250 A** **400 A** **600 A** **1 kA** **1.5 kA** **2.5 kA** **4 kA** **6 kA** **10 kA** **15 kA**	1. Measuring movement current considerated when calibrating shunts: B2 - 60 mV – 10 mA B3 - 150 mV – 5 mA 2. Resistance of conductors linking the meter with the shunt: 0.035 Ω 3. After agreeing with the producer it is possible to offer shunts with following standarized voltage drops: 50 mV. 75 mV. 100 mV 4. Further particulars on shunts are contained in heit data sheet avaiable on the website www.lumel.com.pl

AC MEASURING RANGES

Table 3

Frontal frame dimensions [mm]	72 x 72	96 x 96	144 x 144	
Scale lenght [mm]	**106**	**142**	**230**	**Remarks**
Weight [kg]	**0.25**	**0.30**	**0.43**	
Type	**MA17L(P)**	**MA19L(P)**	**MA12L(P)**	
Measuring range	Drop voltage or power consumption (self-consumption)			
100 mA	1.8V	1.8V	1.8V	Rated operational range for frequency 40...1000...10 000 Hz
1A	75mV	75mV	75mV	
5A	75mV	75mV	75mV	
10A	75mV	75mV	75mV	
40 V [1]	900 Ω /V	900 Ω /V	900 Ω /V	
60 V [2]				
100 V				
150 V				
250 V				
400 V				
500 V				
600 V				

[1] - accuracy class 5

[2] - accuracy class 2.5

ORDERING PROCEDURE

In the order one must specify: name and type of meter, measuring range, shunt data if the meter is foreseen to co-operate with an interchangeable shunt, working position and eventual additional requirements. Shunt must be ordered separately.

When ordering meters for measuring a.c. current or a.c. voltage, one must add to the meter name „rectifier" - (rectifier meter).

Example of order:

Ammeter with scale 240° of MA16L type with a range of 40 A. for use with a shunt type B2 40 A / 60 mV. vertical position 90 °. scale according to the scope without additional requirements. If the shunt is to be delivered with the meter. it should be placed in the order as a separate item eg. shunt B2 40 A / 60 mV.

EXTERNAL DIMENSIONS

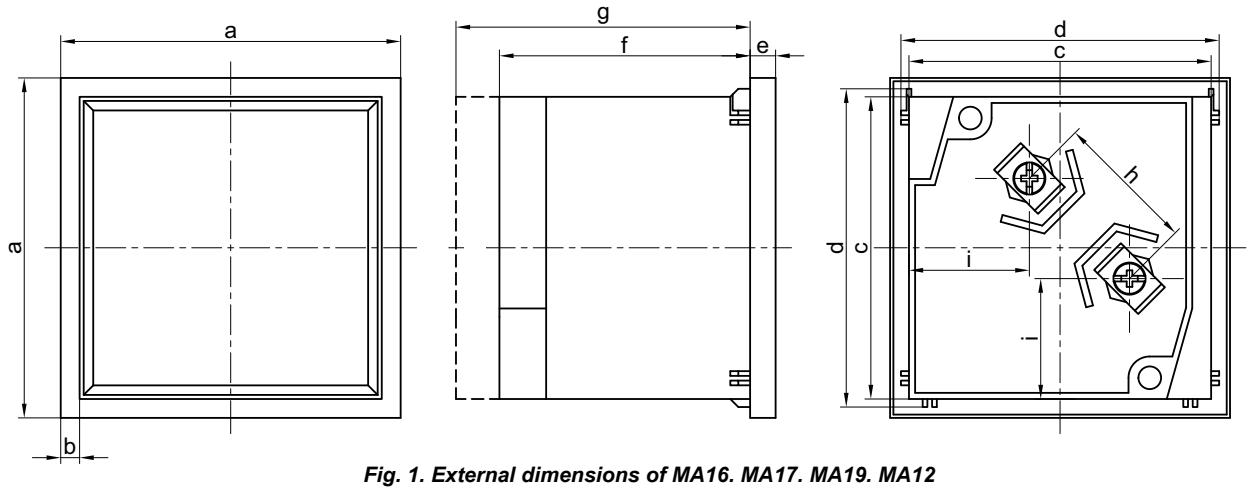

Fig. 1. External dimensions of MA16. MA17. MA19. MA12

External dimensions of MA16L, MA17L, MA19L, MA12L [mm] meters.

Type	a	b	c	d	e	f		g		h	i	x	y
						<6A	6-60A		>6A				IP65 set
MA16L	48	3	43.5	44.5	5.5	53	68	64	70	18.7	21.6	45+0.6	54.8
MA17L	72	4	64	67.5	5.5	53	68	64	70	30	25.7	68+0.7	79.6
MA19L	96	4	88	91.5	5.5	53	68	64	70	30	27.2	92+0.8	103.6
MA12L	144	5.5	136	137.5	8.5	53	68	64	70	30	37	138+1	none

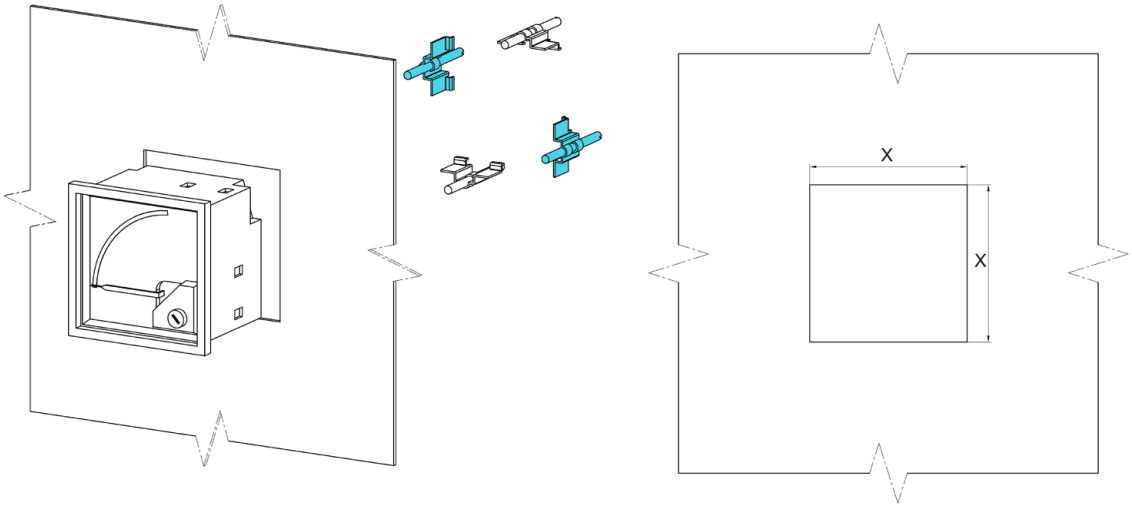

*Fig. 2. Fixing of meters MA16L, MA17L, MA19L in the panel (version with IP52) **

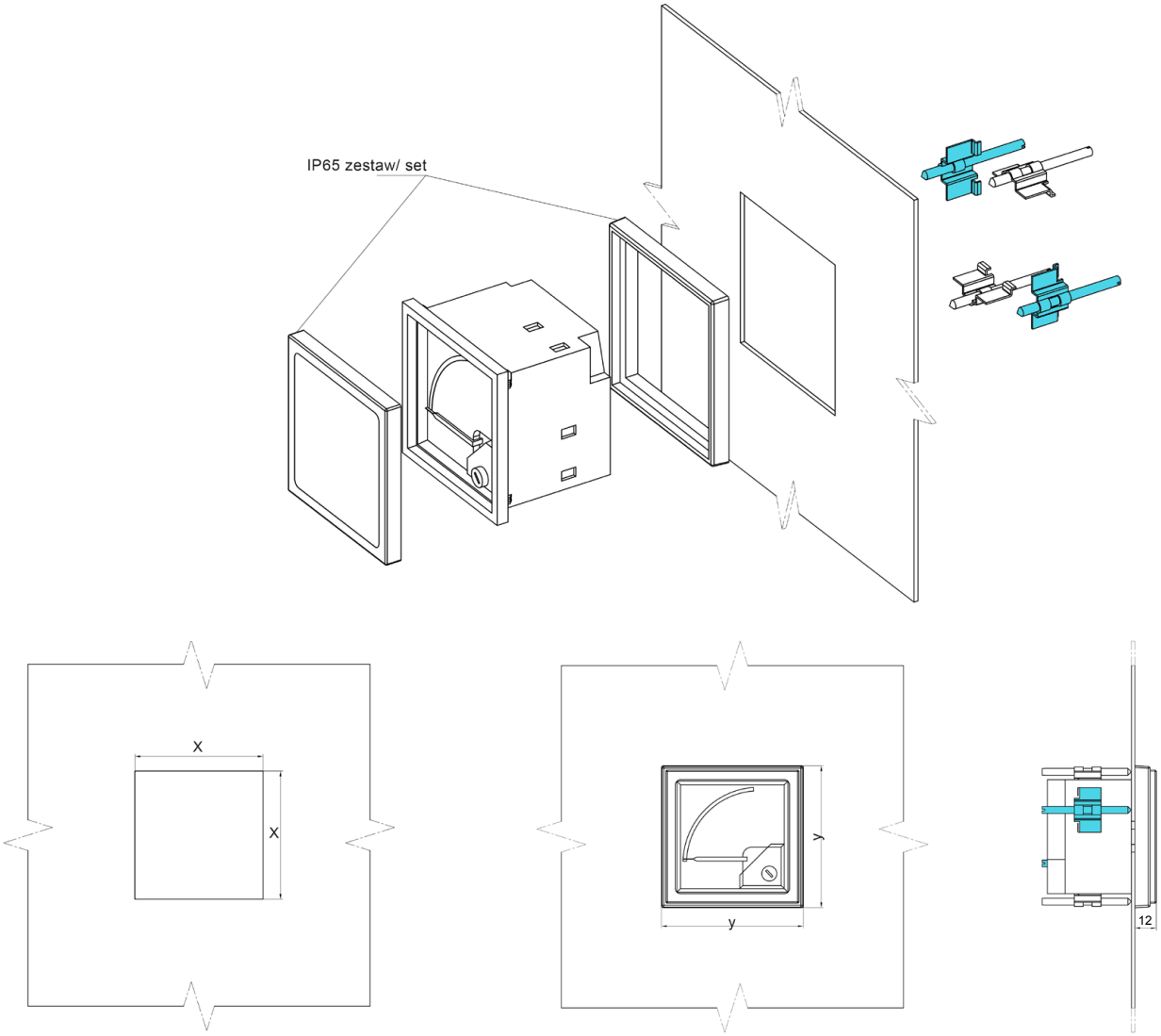

*Fig. 3. Fixing of meters MA16L, MA17L, MA19L in the panel (version with IP65) **

*** Included are two screw holders which should be fixed on arbitrary, opposite case corners**

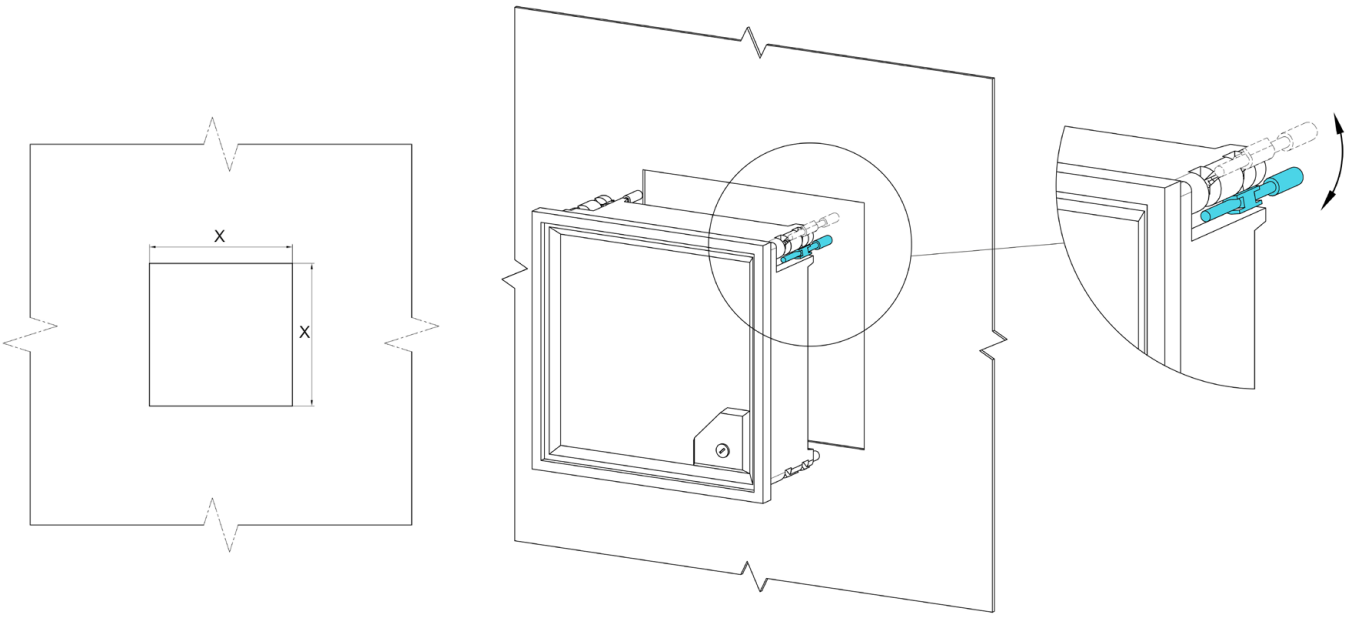

Fig. 4. Fixing of MA12 meters (version with IP52)

CODING OF THE WORKING POSITION

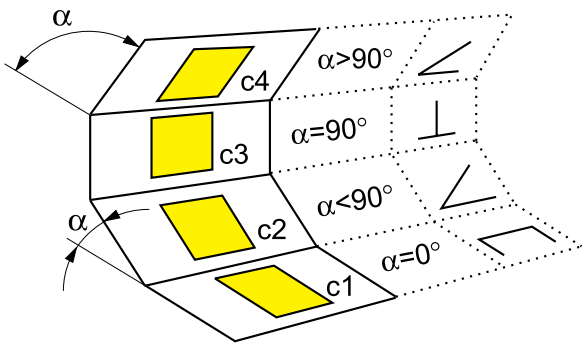

Table 4

Code	Working position
0	c3 α = 90°
A	c1 α = 0°
B	c2. α = 15°
C	c2. α = 30°
D	c2. α = 45°
E	c2. α = 60°
F	c2. α = 75°
H	c4. α = 105°
I	c4. α = 120°

Table 5
(only for MA16L)

Code	Working position
A	c3 α = 90°
B	c1 α = 0°
C	c2. α = 15°
D	c2. α = 30°
E	c2. α = 45°
F	c2. α = 60°
G	c2. α = 75°
H	c4. α = 105°
I	c4. α = 120°

Castel Maggiore (BO) 40013
Via Lirone 60/i

e-mail: info@eurotecsrl.com
Tel: +39 051/6321595
Website: www.eurotecsrl.com

C.F.: 04103780377
P.I.: 01596581205