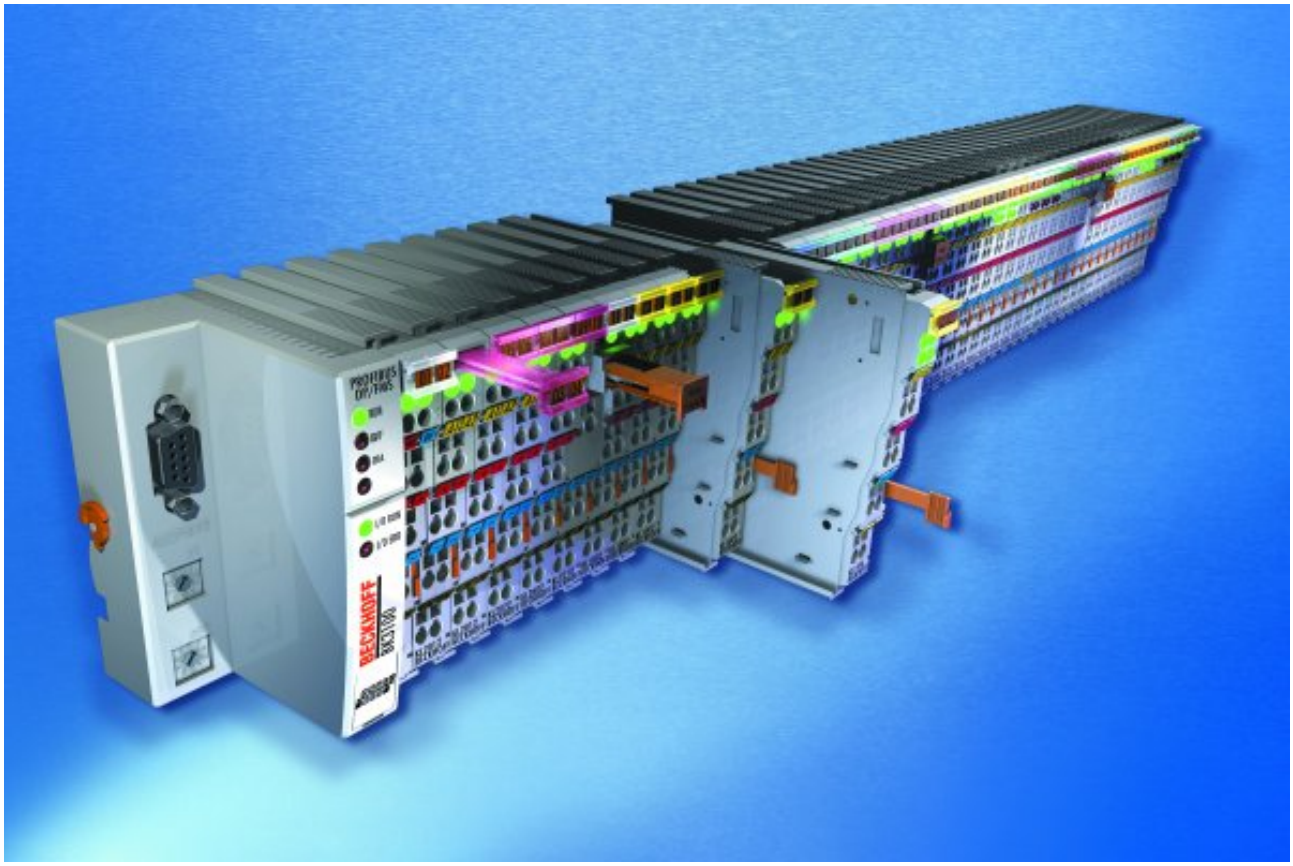

Documentation

KL3444, KL3448, KL3454 und KL3458

four and eight channel analog input terminals

EUROTEC
TECNOLOGIE IMPIANTISTICHE - AUTOMAZIONE - TELECONTROLLO

BECKHOFF

Table of contents

1 Foreword ... 5
1.1 Notes on the documentation ... 5
1.2 Safety instructions ... 6
1.3 Documentation Issue Status ... 7
1.4 Beckhoff Identification Code (BIC) ... 8
2 KL3444, KL3454 - Product Overview ... 10
2.1 Introduction ... 10
2.2 Technical Data ... 12
2.3 Diagnostic LEDs ... 13
3 KL3448, KL3458 - Product Overview ... 14
3.1 Introduction ... 14
3.2 Technical Data ... 16
3.3 KL3448 - Diagnostic LEDs ... 17
3.4 KL3458 - Diagnostic LEDs ... 18
4 Basic Function Principles ... 19
5 Mounting and wiring ... 21
5.1 Instructions for ESD protection ... 21
5.2 Installation on mounting rails ... 21
5.3 Installation instructions for enhanced mechanical load capacity ... 24
5.4 Connection ... 25
5.4.1 Connection system ... 25
5.4.2 Wiring ... 27
5.4.3 Shielding ... 28
5.4.4 KL3444 - Connection ... 28
5.4.5 KL3454 - Connection ... 29
5.4.6 KL3448, KL3458 - Connection ... 30
5.5 ATEX - Special conditions (standard temperature range) ... 31
5.6 ATEX - Special conditions (extended temperature range) ... 32
5.7 ATEX Documentation ... 33
6 KS2000 Configuration Software ... 34
6.1 KS2000 - Introduction ... 34
6.2 Parameterization with KS2000 ... 36
6.3 Settings ... 37
6.4 Register ... 39
6.5 Sample program for KL register communication via EtherCAT on KL3314 exemplary ... 40
7 Access from the User Program ... 43
7.1 Process image ... 43
7.2 Mapping ... 44
7.3 Control and Status Bytes ... 47
7.3.1 Process data mode ... 47
7.3.2 Register communication ... 48
7.4 Register Overview ... 49
7.5 Register description ... 50

7.6 Examples of Register Communication 53
7.6.1 Example 1: reading the firmware version from Register 9 53
7.6.2 Example 2: Writing to an user register 54

8 Appendix 57
8.1 Support and Service 57

1 Foreword

1.1 Notes on the documentation

Intended audience

This description is only intended for the use of trained specialists in control and automation engineering who are familiar with the applicable national standards.
It is essential that the documentation and the following notes and explanations are followed when installing and commissioning these components.
It is the duty of the technical personnel to use the documentation published at the respective time of each installation and commissioning.

The responsible staff must ensure that the application or use of the products described satisfy all the requirements for safety, including all the relevant laws, regulations, guidelines and standards.

Disclaimer

The documentation has been prepared with care. The products described are, however, constantly under development.

We reserve the right to revise and change the documentation at any time and without prior announcement.

No claims for the modification of products that have already been supplied may be made on the basis of the data, diagrams and descriptions in this documentation.

Trademarks

Beckhoff®, TwinCAT®, EtherCAT®, EtherCAT G®, EtherCAT G10®, EtherCAT P®, Safety over EtherCAT®, TwinSAFE®, XFC®, XTS® and XPlanar® are registered trademarks of and licensed by Beckhoff Automation GmbH. Other designations used in this publication may be trademarks whose use by third parties for their own purposes could violate the rights of the owners.

Patent Pending

The EtherCAT Technology is covered, including but not limited to the following patent applications and patents: EP1590927, EP1789857, EP1456722, EP2137893, DE102015105702 with corresponding applications or registrations in various other countries.

EtherCAT® is registered trademark and patented technology, licensed by Beckhoff Automation GmbH, Germany.

Copyright

© Beckhoff Automation GmbH & Co. KG, Germany.
The reproduction, distribution and utilization of this document as well as the communication of its contents to others without express authorization are prohibited.
Offenders will be held liable for the payment of damages. All rights reserved in the event of the grant of a patent, utility model or design.

1.2 Safety instructions

Safety regulations

Please note the following safety instructions and explanations!
Product-specific safety instructions can be found on following pages or in the areas mounting, wiring, commissioning etc.

Exclusion of liability

All the components are supplied in particular hardware and software configurations appropriate for the application. Modifications to hardware or software configurations other than those described in the documentation are not permitted, and nullify the liability of Beckhoff Automation GmbH & Co. KG.

Personnel qualification

This description is only intended for trained specialists in control, automation and drive engineering who are familiar with the applicable national standards.

Description of instructions

In this documentation the following instructions are used.
These instructions must be read carefully and followed without fail!

⚠ DANGER

Serious risk of injury!

Failure to follow this safety instruction directly endangers the life and health of persons.

⚠ WARNING

Risk of injury!

Failure to follow this safety instruction endangers the life and health of persons.

⚠ CAUTION

Personal injuries!

Failure to follow this safety instruction can lead to injuries to persons.

NOTE

Damage to environment/equipment or data loss

Failure to follow this instruction can lead to environmental damage, equipment damage or data loss.

Tip or pointer

This symbol indicates information that contributes to better understanding.

1.3 Documentation Issue Status

Version	Comment
3.2.0	• Update chapter “Instructions for ESD protection” • Chapter “Beckhoff Identification Code (BIC)” added
3.1.0	• Design of the safety instructions adapted to IEC 82079-1 • Update Technical data • Chapter *Instructions for ESD protection* added • Example program added to chapter *KS2000 Configuration software* • Update structure
3.0.0	• Migration
2.2.0	• Mounting and wiring updated • Technical Data updated • ATEX notes added • Extended temperature range for KL3454-0000
2.1.2	• Connection corrected
2.1.1	• Introduction updated • Technical Data updated • Register description updated • Description of the KS2000 settings updated • Firmware and hardware versions updated
2.1.0	• Infinite Impulse Response filter (IIR) added • Register description updated • Description of the KS2000 configuration software updated
2.0.0	• Eight channel bus terminals added: KL3448 and KL3458
1.1	• Connection of reference ground corrected
1.0	• First release
0.1	• Internal proof copy

Firmware and hardware versions

Documentation Version	KL3444-0000		KL3448-0000		KL3454-0000		KL3458-0000	
	Firmware	Hardware	Firmware	Hardware	Firmware	Hardware	Firmware	Hardware
3.1.0	1E	07	1D	06	1F	07	1D	06
3.0.0	1E	07	1D	06	1F	07	1D	06
2.2.0	1E	01	1C	01	1E	01	1C	01
2.1.2	1E	01	1C	01	1E	01	1C	01
2.1.1	1E	01	1C	01	1E	01	1C	01
2.1.0	1E	00	1C	00	1E	00	1C	00
2.0.0	1D	00	1B	00	1D	00	1B	00

The firmware and hardware versions (delivery state) can be found in the serial number printed on the side of the terminal.

Syntax of the serial number

Structure of the serial number: WW YY FF HH

WW - week of production (calendar week)
YY - year of production
FF - firmware version
HH - hardware version

Example with ser. no.: 35 04 1B 01:

35 - week of production 35
04 - year of production 2004
1B - firmware version 1B
01 - hardware version 01

1.4 Beckhoff Identification Code (BIC)

The Beckhoff Identification Code (BIC) is increasingly being applied to Beckhoff products to uniquely identify the product. The BIC is represented as a Data Matrix Code (DMC, code scheme ECC200), the content is based on the ANSI standard MH10.8.2-2016.

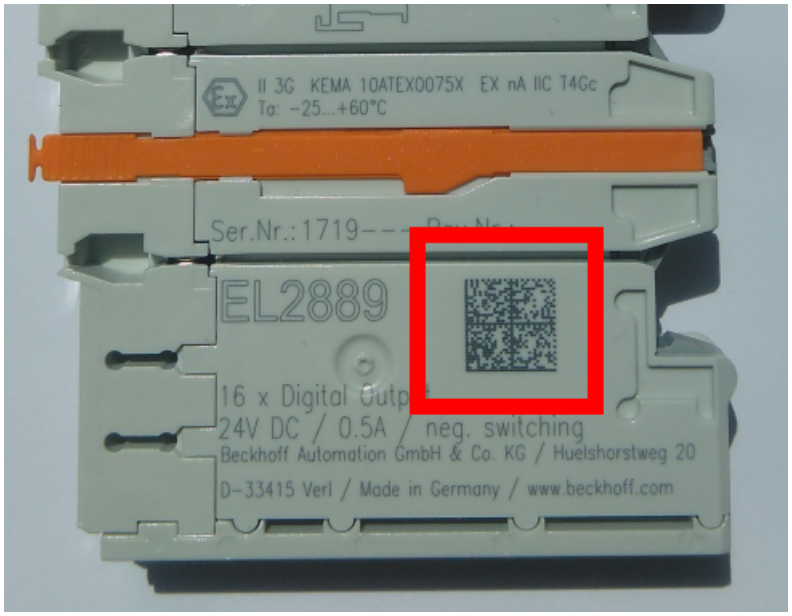

Fig. 1: BIC as data matrix code (DMC, code scheme ECC200)

The BIC will be introduced step by step across all product groups.

Depending on the product, it can be found in the following places:

- on the packaging unit
- directly on the product (if space suffices)
- on the packaging unit and the product

The BIC is machine-readable and contains information that can also be used by the customer for handling and product management.

Each piece of information can be uniquely identified using the so-called data identifier (ANSI MH10.8.2-2016). The data identifier is followed by a character string. Both together have a maximum length according to the table below. If the information is shorter, spaces are added to it. The data under positions 1 to 4 are always available.

The following information is contained:

Item no.	Type of information	Explanation	Data identifier	Number of digits incl. data identifier	Example
1	Beckhoff order number	**Beckhoff order number**	1P	8	1P072222
2	Beckhoff Traceability Number (BTN)	**Unique serial number, see note below**	S	12	SBTNk4p562d7
3	Article description	**Beckhoff article description, e.g. EL1008**	1K	32	1KEL1809
4	Quantity	**Quantity in packaging unit, e.g. 1, 10, etc.**	Q	6	Q1
5	Batch number	Optional: Year and week of production	2P	14	2P401503180016
6	ID/serial number	Optional: Present-day serial number system, e.g. with safety products	51S	12	51S678294104
7	Variant number	Optional: Product variant number on the basis of standard products	30P	32	30PF971, 2*K183
...					

Further types of information and data identifiers are used by Beckhoff and serve internal processes.

Structure of the BIC

Example of composite information from item 1 to 4 and 6. The data identifiers are marked in red for better display:

BTN

An important component of the BIC is the Beckhoff Traceability Number (BTN, item no. 2). The BTN is a unique serial number consisting of eight characters that will replace all other serial number systems at Beckhoff in the long term (e.g. batch designations on IO components, previous serial number range for safety products, etc.). The BTN will also be introduced step by step, so it may happen that the BTN is not yet coded in the BIC.

NOTE

This information has been carefully prepared. However, the procedure described is constantly being further developed. We reserve the right to revise and change procedures and documentation at any time and without prior notice. No claims for changes can be made from the information, illustrations and descriptions in this information.

2 KL3444, KL3454 - Product Overview

2.1 Introduction

KL3444: 4-channel analog input terminal 0 ... 20 mA

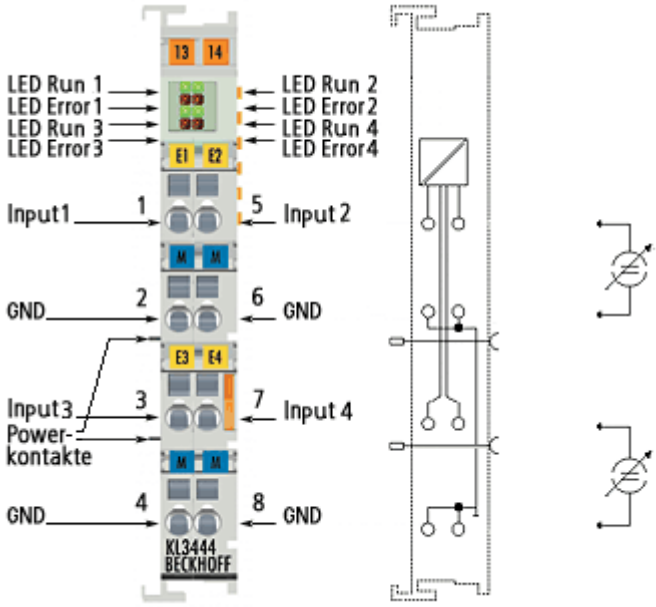

Fig. 2: KL3444

The EL3444 analog input terminal process signals in the range between 0 and 20 mA. The current is digitized to a resolution of 12 bits, and is transmitted, in an electrically isolated form, to the higher-level automation device.

In the KL3444 Bus Terminal, the four inputs are 2-wire versions and have a common ground potential. This reference ground of the inputs is electrically isolated from the 0 V power contact. The power contacts are connected through.

Overload is detected and the terminal status is forwarded to the controller via the K-bus. The Run LEDs indicate the data exchange with the Bus Coupler, while the Error LEDs indicate overload.

KL3454: 4-channel analog input terminal 4 ... 20 mA

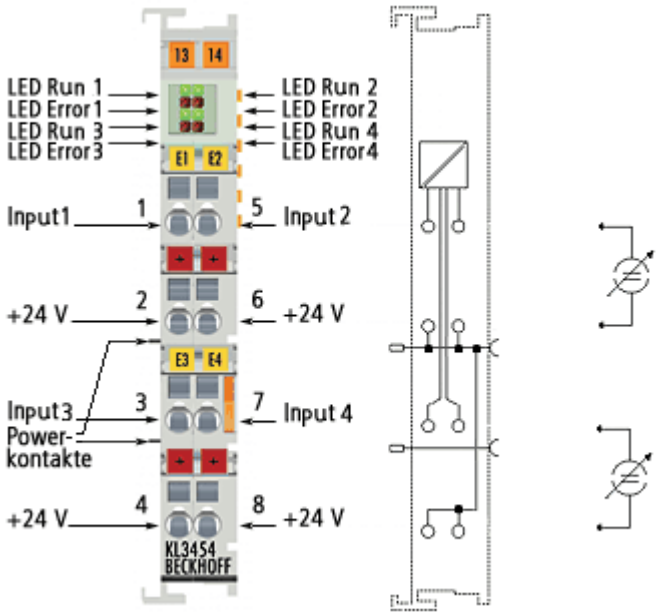

Fig. 3: KL3454

The EL3454 analog input terminal process signals in the range between 4 and 20 mA. The current is digitized to a resolution of 12 bits, and is transmitted, in an electrically isolated form, to the higher-level automation device.

In the KL3454 Bus Terminal, the four inputs are 2-wire versions and have a common ground potential. This reference ground of the inputs is connected to the 0 V power contact. The 24 V power contact is connected to the terminals, in order to enable the connection of 2-wire sensors without external supply. The power contacts are connected through.

Overload is detected and the terminal status is forwarded to the controller via the K-bus. The Run LEDs indicate the data exchange with the Bus Coupler, while the Error LEDs indicate overload.

2.2 Technical Data

Technical Data	KL3444-0000, KS3444-0000	KL3454-0000, KS3454-0000
Number of inputs	4	4
Signal voltage	0 ... 20 mA	4 ... 20 mA
Internal resistance	< 85 Ω	
Common-mode voltage U_{CM}	max. 30 V	max. 30 V
Resolution	12 Bit	
Conversion time	approx. 2 ms	
Measuring error (total measuring range)	< ±0.3% of the full scale value	< ± 0.3% (at 0 °C ... +55 °C, relative to the full scale value) < ± 0.75% (when the extended temperature range is used)
Surge voltage resistance	30 V_{DC}	
Electrical isolation	500 V (K-bus/signal voltage)	
Power supply for the electronics	via the K-bus	
Current consumption from the K-bus	typically 85 mA	
Bit width in process image	Input: 4 x 16 bit user data, 4 x 8 bit control/status (optional)	
Weight	approx. 55 g	
Dimensions (W x H x D)	approx. 15 mm x 100 mm x 70 mm	
Assembly	on 35 mm mounting rail conforms to EN 60715	
Pluggable wiring	for all KSxxxx terminals	
Permissible ambient temperature range during operation	0 °C ... + 55 °C	-25 °C ... +60 °C (extended temperature range)
Permissible ambient temperature range during storage	-25 °C ... + 85 °C	-40 °C ... + 85 °C
Permissible relative air humidity	95 %, no condensation	
Vibration / shock resistance	conforms to EN 60068-2-6/EN 60068-2-27, see also Installation instructions for enhanced mechanical load capacity [▶ 24]	
EMC immunity / emission	conforms to EN 61000-6-2 / EN 61000-6-4	
Protection class	IP20	
Installation position	variable	
Approval	CE, cULus, ATEX [▶ 31], GL	CE, cULus, ATEX [▶ 32], GL

2.3 Diagnostic LEDs

The four green RUN LEDs and the four red Error LEDs indicate the operating states of the terminal channels.

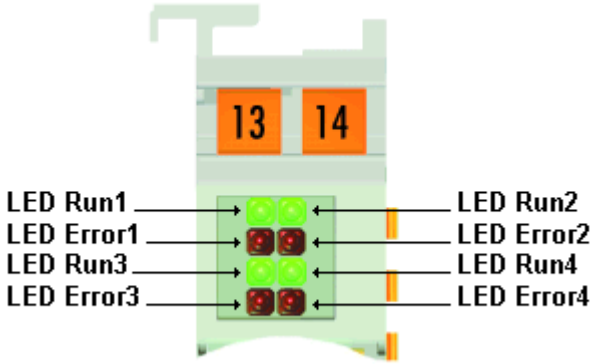

Fig. 4: KL3444, KL3454 - Diagnostic LEDs

Meaning of the LED displays

LED	Color	Channel	State	
			on	off
Run1	green	1	normal operation	A watchdog timer overflow has occurred. The green LEDs go out if no process data are transferred between the controller and the Bus Coupler for more than 100 ms.
Run2		2		
Run3		3		
Run4		4		
Error1	red	1	Channel current greater than 20.8 mA	normal operation
Error2		2		
Error3		3		
Error4		4		

3 KL3448, KL3458 - Product Overview

3.1 Introduction

KL3448: 8-channel analog input terminal 0 ... 20 mA

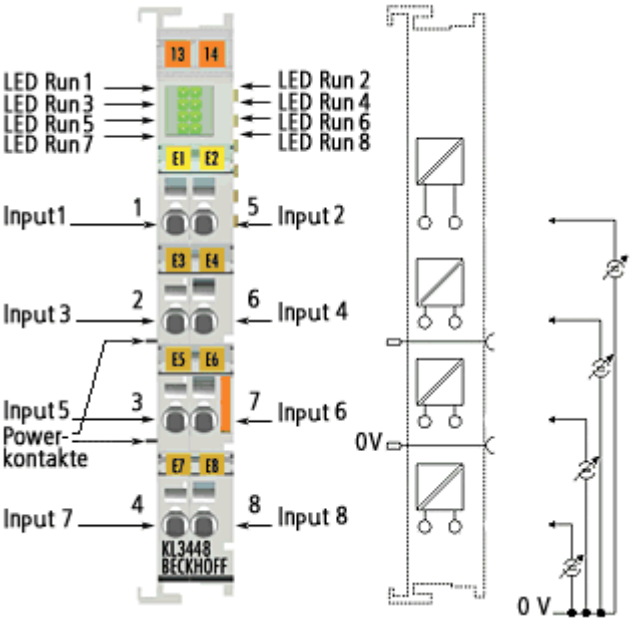

Fig. 5: KL3448

The EL3448 analog input terminal process signals in the range between 0 and 20 mA. The current is digitized to a resolution of 12 bits, and is transmitted, in an electrically isolated form, to the higher-level automation device.

The KL3448 variant combines 8 channels in one housing and is particularly suitable for space-saving installation in control cabinets. The use of single conductor connection technology enables the connection of multi-channel sensor technology with minimum space requirements. In the KL3448, the power contacts of are connected through. The reference ground for all inputs is the 0 V power contact.

Overload is detected and the terminal status is forwarded to the controller via the K-bus. The Run LEDs give an indication of the data exchange with the Bus Coupler.

KL3458: 8-channel analog input terminal 4 ... 20 mA

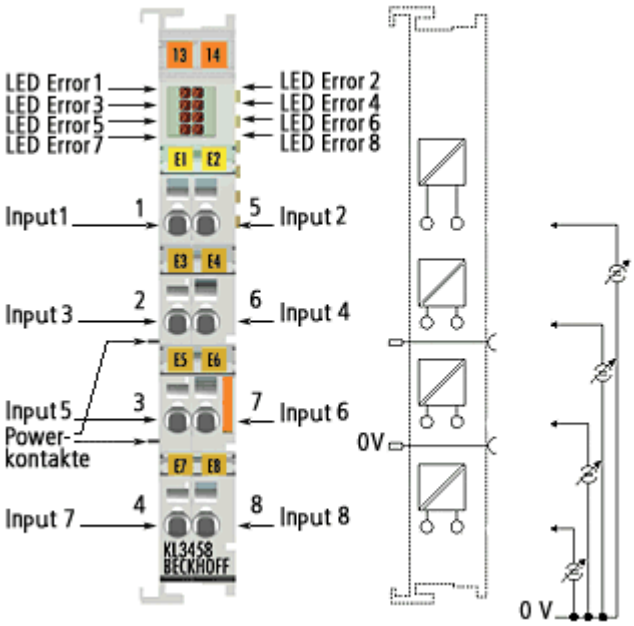

Fig. 6: KL3458

The EL3458 analog input terminal process signals in the range between 4 and 20 mA. The current is digitized to a resolution of 12 bits, and is transmitted, in an electrically isolated form, to the higher-level automation device.

The KL3458 variant combines 8 channels in one housing and is particularly suitable for space-saving installation in control cabinets. The use of single conductor connection technology enables the connection of multi-channel sensor technology with minimum space requirements. In the KL3458, the power contacts of are connected through. The reference ground for all inputs is the 0 V power contact.

Overload is detected and the terminal status is forwarded to the controller via the K-bus. The Error LEDs indicate overload and wire breakage.

3.2 Technical Data

Technical Data	KL3448-0000, KS3448-0000	KL3458-0000, KS3458-0000
Number of inputs	8	8
Signal voltage	0 ... 20 mA	4 ... 20 mA
Internal resistance	< 85 Ω	
Common-mode voltage U_{CM}	max. 30 V	max. 30 V
Resolution	12 Bit	
Conversion time	approx. 4 ms	
Measuring error (total measuring range)	< ±0.3% of the full scale value	
Surge voltage resistance	30 V_{DC}	
Electrical isolation	500 V (K-Bus/signal voltage)	
Power supply for the electronics	via the K-bus	
Current consumption from the K-bus	typically 105 mA	
Bit width in process image	Input: 8 x 16 bit user data, 8 x 8 bit control/status (optional)	
Weight	approx. 55 g	
Dimensions (W x H x D)	approx. 15 mm x 100 mm x 70 mm	
Assembly	on 35 mm mounting rail conforms to EN 60715	
Pluggable wiring	for all KSxxxx terminals	
Permissible ambient temperature range during operation	0 °C ... + 55 °C	
Permissible ambient temperature range during storage	-25 °C ... + 85 °C	
Permissible relative air humidity	95 %, no condensation	
Vibration / shock resistance	conforms to EN 60068-2-6/EN 60068-2-27, see also Installation instructions for enhanced mechanical load capacity [▶ 24]	
EMC immunity / emission	conforms to EN 61000-6-2 / EN 61000-6-4	
Protection class	IP20	
Installation position	variable	
Approval	CE, cULus, ATEX [▶ 31], GL	

3.3 KL3448 - Diagnostic LEDs

The eight green Run LEDs indicate the operating states of the terminal channels.

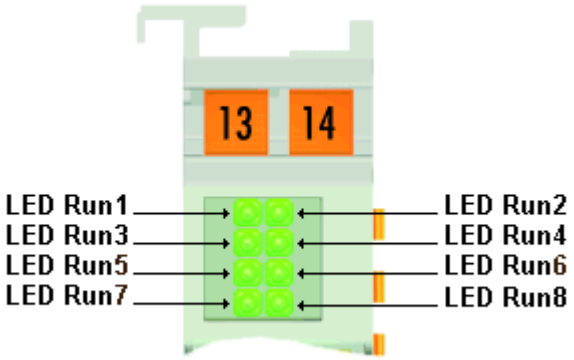

Fig. 7: KL3448 - Diagnostic LEDs

Meaning of the LED displays

LED	Color	Channel	State	
			on	off
Run 1	green	1	normal operation	A watchdog timer overflow has occurred. The green LEDs go out if no process data are transferred between the controller and the Bus Coupler for more than 100 ms.
Run 2		2		
Run 3		3		
Run 4		4		
Run 5		5		
Run 6		6		
Run 7		7		
Run 8		8		

3.4 KL3458 - Diagnostic LEDs

The eight red Error LEDs indicate the operating states of the terminal channels.

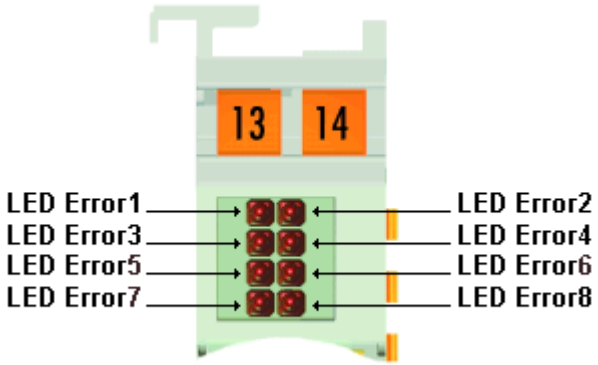

Fig. 8: KL3458 - Diagnostic LEDs

Meaning of the LED displays

LED	Color	Channel	State	
			on	off
Error 1	red	1	Channel current greater than 20.8 mA	normal operation
Error 2		2		
Error 3		3		
Error 4		4		
Error 5		1		
Error 6		2		
Error 7		3		
Error 8		4		

4 Basic Function Principles

The analog input terminals

- KL3444 and KL3448 process signals in the range between 0 and 20 mA
- KL3454 and KL3458 process signals in the range between 4 and 20 mA

with a resolution of 12 bits (4095 steps). They can supply the sensors from voltage fed in via the power contacts. The power contacts can optionally be supplied via the standard supply or via a power feed terminal with electrical isolation.

Process data output format

In the delivery state the process data are shown in two's complement form (integer -1 corresponds to 0xFFFF). Other presentation types can be selected via the feature register R32 (e.g. signed amount representation, Siemens output format).

Measured value		Input data	
KL3444, KL3448	**KL3454, KL3458**	**decimal**	**hexadecimal**
0 mA	4 mA	0	0x0000
10 mA	12 mA	16383	0x3FFF
20 mA	20 mA	32767	0x7FFF

Process data equations

The process data that are transferred to the Bus Coupler are calculated using the following equations:

Neither user nor manufacturer scaling is active

$Y_a = (B_a + X_{ADC}) \times A_a$ (1.0)
$Y_{out} = Y_a$

Manufacturer scaling active (default setting)

$Y_1 = B_h + A_h \times Y_a$ (1.1)
$Y_{out} = Y_1$

User scaling active

$Y_2 = B_w + A_w \times Y_a$ (1.2)
$Y_{out} = Y_2$

Manufacturer and user scaling active

$Y_1 = B_h + A_h \times Y_a$ (1.3)
$Y_2 = B_w + A_w \times Y_1$ (1.4)
$Y_{out} = Y_2$

Key

X_{ADC}:	Output values of the A/D converter	
Y_{out}:	Process data to PLC	
B_a, A_a:	Manufacturer gain and offset compensation	(R17 [▶ 51], R18 [▶ 51])
B_h, A_h:	Manufacturer scaling	(R19 [▶ 51], R20 [▶ 51])
B_w, A_w:	User scaling	(R33 [▶ 53], R34 [▶ 53])

The equations of the straight line are enabled via register R32.

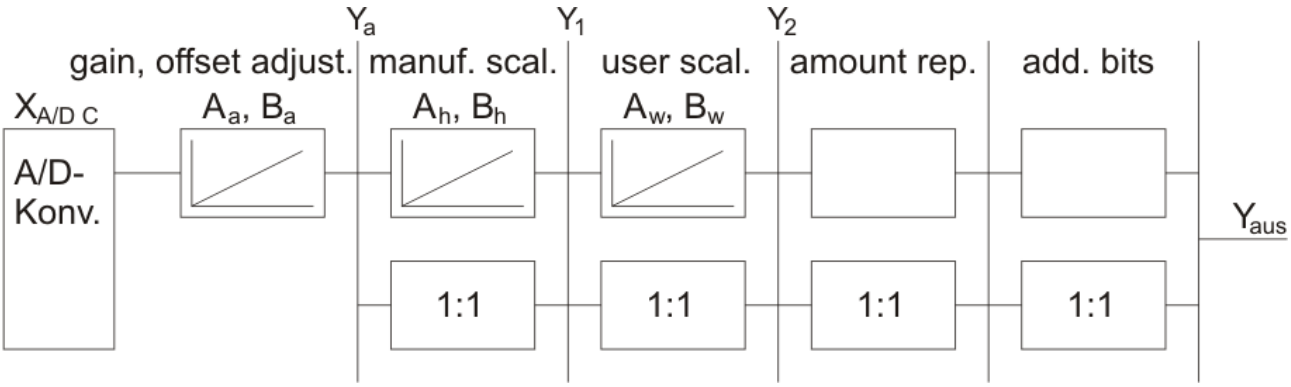

Fig. 9: Signal processing

5 Mounting and wiring

5.1 Instructions for ESD protection

NOTE

Destruction of the devices by electrostatic discharge possible!

The devices contain components at risk from electrostatic discharge caused by improper handling.

- Please ensure you are electrostatically discharged and avoid touching the contacts of the device directly.
- Avoid contact with highly insulating materials (synthetic fibers, plastic film etc.).
- Surroundings (working place, packaging and personnel) should by grounded probably, when handling with the devices.
- Each assembly must be terminated at the right hand end with a KL9010 bus end terminal, to ensure the protection class and ESD protection.

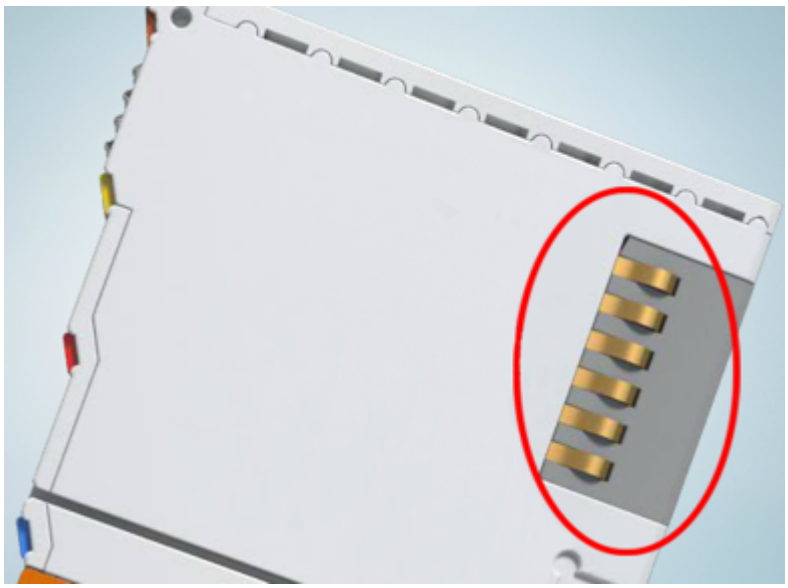

Fig. 10: Spring contacts of the Beckhoff I/O components

5.2 Installation on mounting rails

⚠ WARNING

Risk of electric shock and damage of device!

Bring the bus terminal system into a safe, powered down state before starting installation, disassembly or wiring of the bus terminals!

Assembly

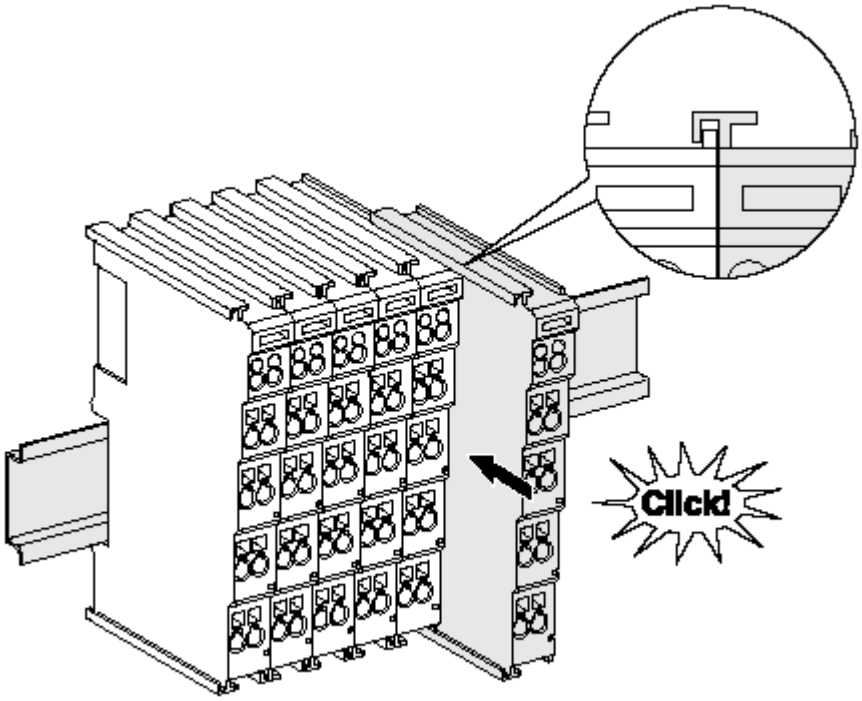

Fig. 11: Attaching on mounting rail

The bus coupler and bus terminals are attached to commercially available 35 mm mounting rails (DIN rails according to EN 60715) by applying slight pressure:

1. First attach the fieldbus coupler to the mounting rail.
2. The bus terminals are now attached on the right-hand side of the fieldbus coupler. Join the components with tongue and groove and push the terminals against the mounting rail, until the lock clicks onto the mounting rail.
   If the terminals are clipped onto the mounting rail first and then pushed together without tongue and groove, the connection will not be operational! When correctly assembled, no significant gap should be visible between the housings.

Fixing of mounting rails

The locking mechanism of the terminals and couplers extends to the profile of the mounting rail. At the installation, the locking mechanism of the components must not come into conflict with the fixing bolts of the mounting rail. To mount the mounting rails with a height of 7.5 mm under the terminals and couplers, you should use flat mounting connections (e.g. countersunk screws or blind rivets).

Disassembly

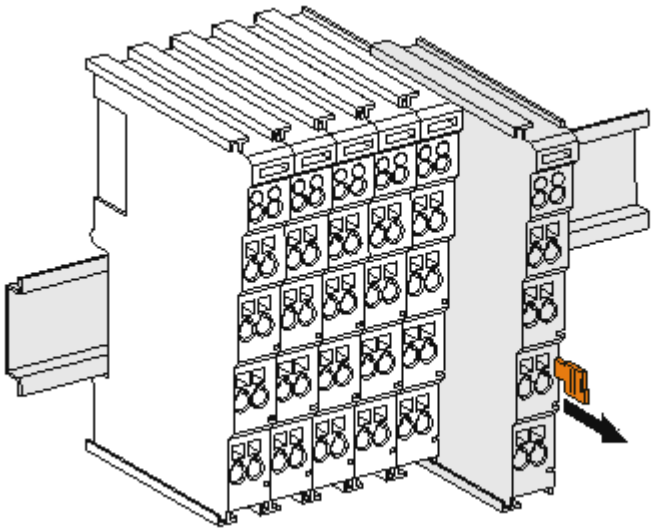

Fig. 12: Disassembling of terminal

Each terminal is secured by a lock on the mounting rail, which must be released for disassembly:

1. Pull the terminal by its orange-colored lugs approximately 1 cm away from the mounting rail. In doing so for this terminal the mounting rail lock is released automatically and you can pull the terminal out of the bus terminal block easily without excessive force.
2. Grasp the released terminal with thumb and index finger simultaneous at the upper and lower grooved housing surfaces and pull the terminal out of the bus terminal block.

Connections within a bus terminal block

The electric connections between the Bus Coupler and the Bus Terminals are automatically realized by joining the components:

- The six spring contacts of the K-Bus/E-Bus deal with the transfer of the data and the supply of the Bus Terminal electronics.
- The power contacts deal with the supply for the field electronics and thus represent a supply rail within the bus terminal block. The power contacts are supplied via terminals on the Bus Coupler (up to 24 V) or for higher voltages via power feed terminals.

Power Contacts

During the design of a bus terminal block, the pin assignment of the individual Bus Terminals must be taken account of, since some types (e.g. analog Bus Terminals or digital 4-channel Bus Terminals) do not or not fully loop through the power contacts. Power Feed Terminals (KL91xx, KL92xx or EL91xx, EL92xx) interrupt the power contacts and thus represent the start of a new supply rail.

PE power contact

The power contact labeled PE can be used as a protective earth. For safety reasons this contact mates first when plugging together, and can ground short-circuit currents of up to 125 A.

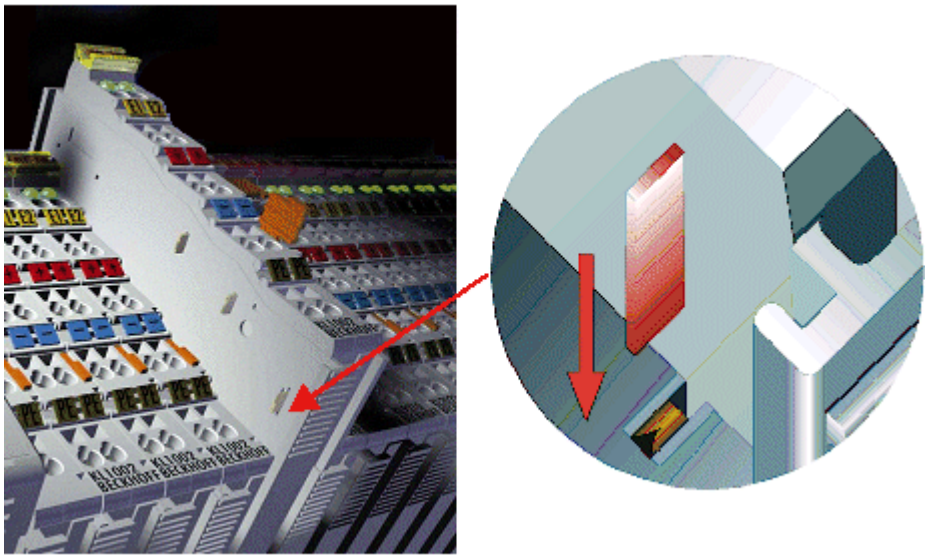

Fig. 13: Power contact on left side

NOTE

Possible damage of the device

Note that, for reasons of electromagnetic compatibility, the PE contacts are capacitatively coupled to the mounting rail. This may lead to incorrect results during insulation testing or to damage on the terminal (e.g. disruptive discharge to the PE line during insulation testing of a consumer with a nominal voltage of 230 V). For insulation testing, disconnect the PE supply line at the Bus Coupler or the Power Feed Terminal! In order to decouple further feed points for testing, these Power Feed Terminals can be released and pulled at least 10 mm from the group of terminals.

⚠ WARNING

Risk of electric shock!

The PE power contact must not be used for other potentials!

5.3 Installation instructions for enhanced mechanical load capacity

⚠ WARNING

Risk of injury through electric shock and damage to the device!

Bring the Bus Terminal system into a safe, de-energized state before starting mounting, disassembly or wiring of the Bus Terminals!

Additional checks

The terminals have undergone the following additional tests:

Verification	Explanation
Vibration	10 frequency runs in 3 axes
	6 Hz < f < 60 Hz displacement 0.35 mm, constant amplitude
	60.1 Hz < f < 500 Hz acceleration 5 *g*, constant amplitude
Shocks	1000 shocks in each direction, in 3 axes
	25 *g*, 6 ms

Additional installation instructions

For terminals with enhanced mechanical load capacity, the following additional installation instructions apply:

- The enhanced mechanical load capacity is valid for all permissible installation positions
- Use a mounting rail according to EN 60715 TH35-15
- Fix the terminal segment on both sides of the mounting rail with a mechanical fixture, e.g. an earth terminal or reinforced end clamp
- The maximum total extension of the terminal segment (without coupler) is:
  64 terminals (12 mm mounting with) or 32 terminals (24 mm mounting with)
- Avoid deformation, twisting, crushing and bending of the mounting rail during edging and installation of the rail
- The mounting points of the mounting rail must be set at 5 cm intervals
- Use countersunk head screws to fasten the mounting rail
- The free length between the strain relief and the wire connection should be kept as short as possible. A distance of approx. 10 cm should be maintained to the cable duct.

5.4 Connection

5.4.1 Connection system

⚠ WARNING

Risk of electric shock and damage of device!

Bring the bus terminal system into a safe, powered down state before starting installation, disassembly or wiring of the bus terminals!

Overview

The Bus Terminal system offers different connection options for optimum adaptation to the respective application:

- The terminals of ELxxxx and KLxxxx series with standard wiring include electronics and connection level in a single enclosure.
- The terminals of ESxxxx and KSxxxx series feature a pluggable connection level and enable steady wiring while replacing.
- The High Density Terminals (HD Terminals) include electronics and connection level in a single enclosure and have advanced packaging density.

Standard wiring (ELxxxx / KLxxxx)

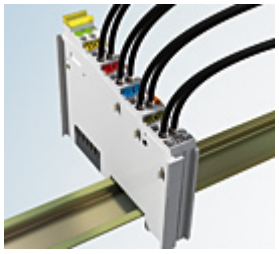

Fig. 14: Standard wiring

The terminals of ELxxxx and KLxxxx series have been tried and tested for years.
They feature integrated screwless spring force technology for fast and simple assembly.

Pluggable wiring (ESxxxx / KSxxxx)

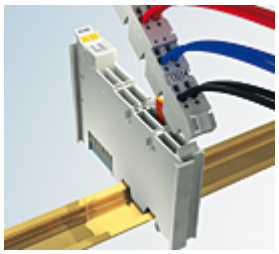

Fig. 15: Pluggable wiring

The terminals of ESxxxx and KSxxxx series feature a pluggable connection level.
The assembly and wiring procedure is the same as for the ELxxxx and KLxxxx series.
The pluggable connection level enables the complete wiring to be removed as a plug connector from the top of the housing for servicing.
The lower section can be removed from the terminal block by pulling the unlocking tab.
Insert the new component and plug in the connector with the wiring. This reduces the installation time and eliminates the risk of wires being mixed up.

The familiar dimensions of the terminal only had to be changed slightly. The new connector adds about 3 mm. The maximum height of the terminal remains unchanged.

A tab for strain relief of the cable simplifies assembly in many applications and prevents tangling of individual connection wires when the connector is removed.

Conductor cross sections between 0.08 mm^2 and 2.5 mm^2 can continue to be used with the proven spring force technology.

The overview and nomenclature of the product names for ESxxxx and KSxxxx series has been retained as known from ELxxxx and KLxxxx series.

High Density Terminals (HD Terminals)

Fig. 16: High Density Terminals

The Bus Terminals from these series with 16 terminal points are distinguished by a particularly compact design, as the packaging density is twice as large as that of the standard 12 mm Bus Terminals. Massive conductors and conductors with a wire end sleeve can be inserted directly into the spring loaded terminal point without tools.

Wiring HD Terminals

The High Density (HD) Terminals of the ELx8xx and KLx8xx series doesn't support pluggable wiring.

Ultrasonically "bonded" (ultrasonically welded) conductors

Ultrasonically “bonded" conductors

It is also possible to connect the Standard and High Density Terminals with ultrasonically "bonded" (ultrasonically welded) conductors. In this case, please note the tables concerning the wire-size width below!

5.4.2 Wiring

⚠ WARNING

Risk of electric shock and damage of device!

Bring the bus terminal system into a safe, powered down state before starting installation, disassembly or wiring of the Bus Terminals!

Terminals for standard wiring ELxxxx/KLxxxx and for pluggable wiring ESxxxx/KSxxxx

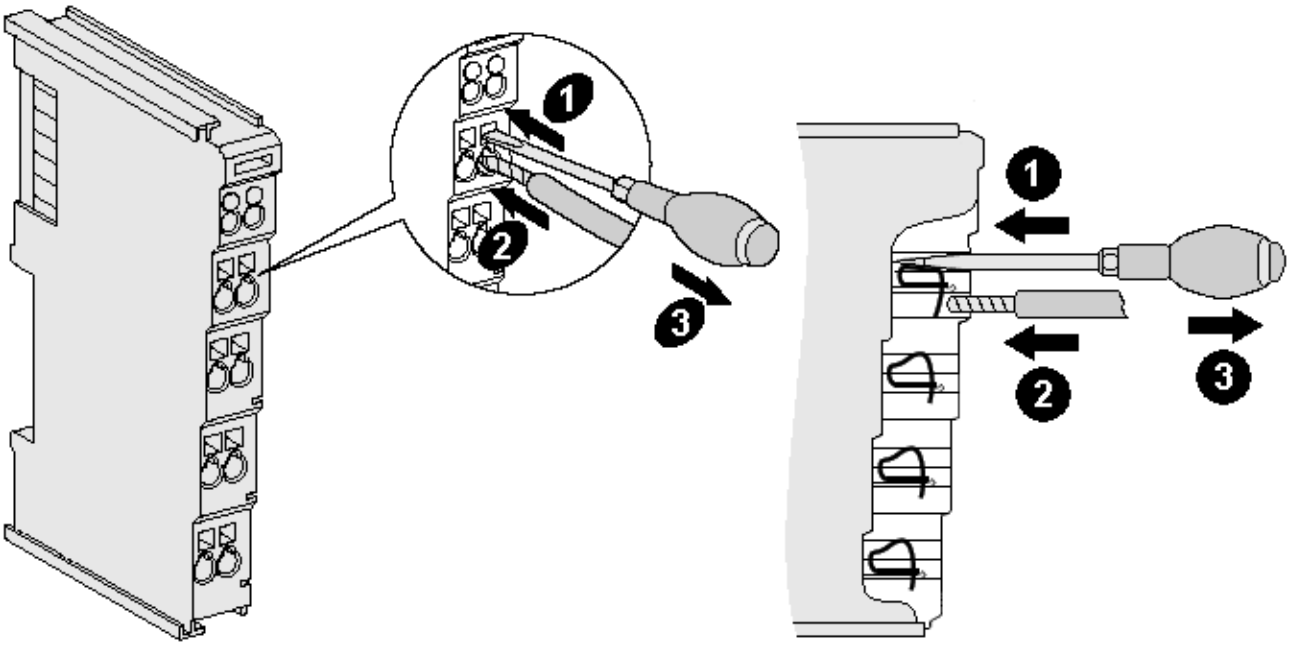

Fig. 17: Connecting a cable on a terminal point

Up to eight terminal points enable the connection of solid or finely stranded cables to the Bus Terminal. The terminal points are implemented in spring force technology. Connect the cables as follows:

1. Open a terminal point by pushing a screwdriver straight against the stop into the square opening above the terminal point. Do not turn the screwdriver or move it alternately (don't toggle).
2. The wire can now be inserted into the round terminal opening without any force.
3. The terminal point closes automatically when the pressure is released, holding the wire securely and permanently.

See the following table for the suitable wire size width.

Terminal housing	ELxxxx, KLxxxx	ESxxxx, KSxxxx
Wire size width (single core wires)	0.08 ... 2.5 mm^2	0.08 ... 2.5 mm^2
Wire size width (fine-wire conductors)	0.08 ... 2.5 mm^2	0,08 ... 2.5 mm^2
Wire size width (conductors with a wire end sleeve)	0.14 ... 1.5 mm^2	0.14 ... 1.5 mm^2
Wire stripping length	8 ... 9 mm	9 ... 10 mm

High Density Terminals (HD Terminals [▶ 26]) with 16 terminal points

The conductors of the HD Terminals are connected without tools for single-wire conductors using the direct plug-in technique, i.e. after stripping the wire is simply plugged into the terminal point. The cables are released, as usual, using the contact release with the aid of a screwdriver. See the following table for the suitable wire size width.

Terminal housing	High Density Housing
Wire size width (single core wires)	0.08 ... 1.5 mm^2
Wire size width (fine-wire conductors)	0.25 ... 1.5 mm^2
Wire size width (conductors with a wire end sleeve)	0.14 ... 0.75 mm^2
Wire size width (ultrasonically “bonded" conductors)	only 1.5 mm^2
Wire stripping length	8 ... 9 mm

5.4.3 Shielding

Shielding

Encoder, analog sensors and actors should always be connected with shielded, twisted paired wires.

5.4.4 KL3444 - Connection

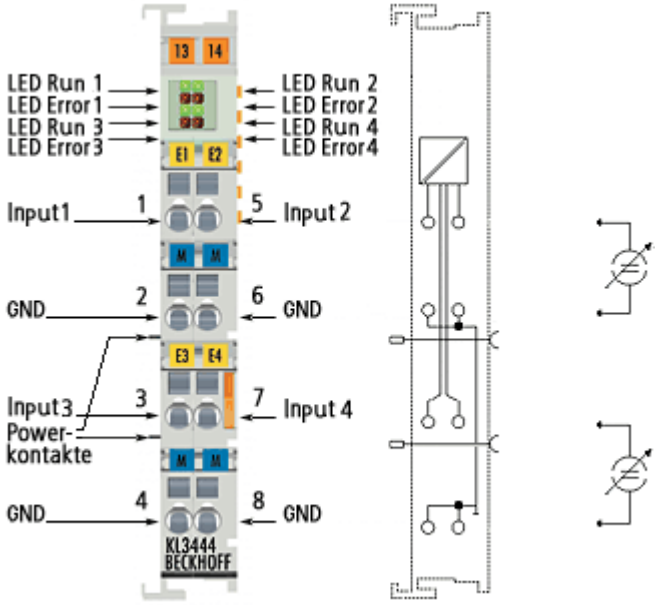

Fig. 18: KL3444 - Connection

Terminal point no.	Channel	Name	Connection for
1	1	Input 1	Input 1, signal
2		GND	Input 1, ground
3	3	Input 3	Input 3, signal
4		GND	Input 3, ground
5	2	Input 2	Input 2, signal
6		GND	Input 2, ground
7	4	Input 4	Input 4, signal
8		GND	Input 4, ground

5.4.5 KL3454 - Connection

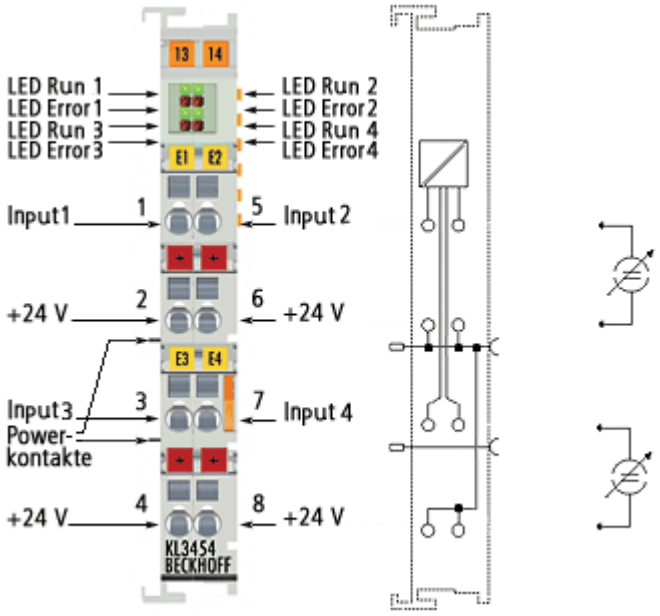

Fig. 19: KL3454 - Connection

Terminal point no.	Channel	Name	Connection for
1	1	Input 1	Input 1, signal
2		+ 24 V	Input 1, 24 V
3	3	Input 3	Input 3, signal
4		+ 24 V	Input 3, 24 V
5	2	Input 2	Input 2, signal
6		+ 24 V	Input 2, 24 V
7	4	Input 4	Input 4, signal
8		+ 24 V	Input 4, 24 V

5.4.6 KL3448, KL3458 - Connection

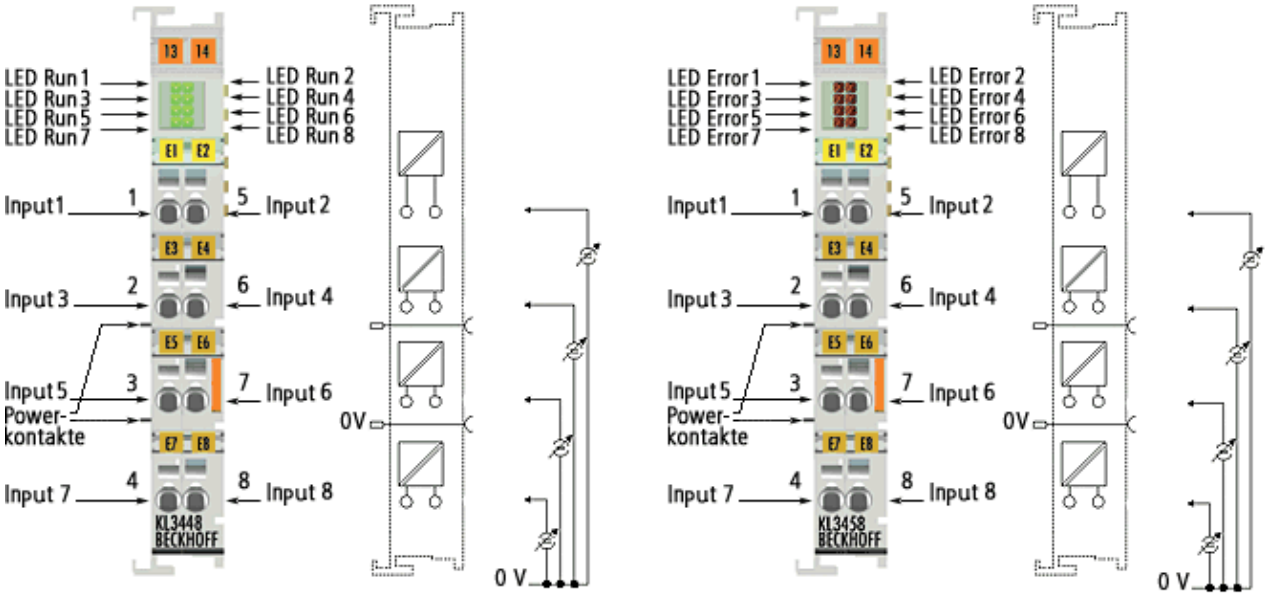

Fig. 20: KL3448, KL3458 - Connection

Terminal point no.	Channel	Name	Connection for
1	1	Input 1	Input 1, signal
2	3	Input 3	Input 3, signal
3	5	Input 5	Input 5, signal
4	7	Input 7	Input 7, signal
5	2	Input 2	Input 2, signal
6	4	Input 4	Input 4, signal
7	6	Input 6	Input 6, signal
8	8	Input 8	Input 8, signal

5.5 ATEX - Special conditions (standard temperature range)

⚠ WARNING

Observe the special conditions for the intended use of Beckhoff fieldbus components with standard temperature range in potentially explosive areas (directive 2014/34/EU)!

- The certified components are to be installed in a suitable housing that guarantees a protection class of at least IP54 in accordance with EN 60079-15! The environmental conditions during use are thereby to be taken into account!
- If the temperatures during rated operation are higher than 70°C at the feed-in points of cables, lines or pipes, or higher than 80°C at the wire branching points, then cables must be selected whose temperature data correspond to the actual measured temperature values!
- Observe the permissible ambient temperature range of 0 to 55°C for the use of Beckhoff fieldbus components standard temperature range in potentially explosive areas!
- Measures must be taken to protect against the rated operating voltage being exceeded by more than 40% due to short-term interference voltages!
- The individual terminals may only be unplugged or removed from the Bus Terminal system if the supply voltage has been switched off or if a non-explosive atmosphere is ensured!
- The connections of the certified components may only be connected or disconnected if the supply voltage has been switched off or if a non-explosive atmosphere is ensured!
- The fuses of the KL92xx/EL92xx power feed terminals may only be exchanged if the supply voltage has been switched off or if a non-explosive atmosphere is ensured!
- Address selectors and ID switches may only be adjusted if the supply voltage has been switched off or if a non-explosive atmosphere is ensured!

Standards

The fundamental health and safety requirements are fulfilled by compliance with the following standards:

- EN 60079-0:2012+A11:2013
- EN 60079-15:2010

Marking

The Beckhoff fieldbus components with standard temperature range certified according to the ATEX directive for potentially explosive areas bear one of the following markings:

II 3G KEMA 10ATEX0075 X Ex nA IIC T4 Gc Ta: 0 … +55°C

or

II 3G KEMA 10ATEX0075 X Ex nC IIC T4 Gc Ta: 0 … +55°C

5.6 ATEX - Special conditions (extended temperature range)

⚠ WARNING

Observe the special conditions for the intended use of Beckhoff fieldbus components with extended temperature range (ET) in potentially explosive areas (directive 2014/34/EU)!

- The certified components are to be installed in a suitable housing that guarantees a protection class of at least IP54 in accordance with EN 60079-15! The environmental conditions during use are thereby to be taken into account!
- If the temperatures during rated operation are higher than 70°C at the feed-in points of cables, lines or pipes, or higher than 80°C at the wire branching points, then cables must be selected whose temperature data correspond to the actual measured temperature values!
- Observe the permissible ambient temperature range of -25 to 60°C for the use of Beckhoff fieldbus components with extended temperature range (ET) in potentially explosive areas!
- Measures must be taken to protect against the rated operating voltage being exceeded by more than 40% due to short-term interference voltages!
- The individual terminals may only be unplugged or removed from the Bus Terminal system if the supply voltage has been switched off or if a non-explosive atmosphere is ensured!
- The connections of the certified components may only be connected or disconnected if the supply voltage has been switched off or if a non-explosive atmosphere is ensured!
- The fuses of the KL92xx/EL92xx power feed terminals may only be exchanged if the supply voltage has been switched off or if a non-explosive atmosphere is ensured!
- Address selectors and ID switches may only be adjusted if the supply voltage has been switched off or if a non-explosive atmosphere is ensured!

Standards

The fundamental health and safety requirements are fulfilled by compliance with the following standards:

- EN 60079-0:2012+A11:2013
- EN 60079-15:2010

Marking

The Beckhoff fieldbus components with extended temperature range (ET) certified according to the ATEX directive for potentially explosive areas bear the following marking:

II 3G KEMA 10ATEX0075 X Ex nA IIC T4 Gc Ta: -25 … +60°C

or

II 3G KEMA 10ATEX0075 X Ex nC IIC T4 Gc Ta: -25 … +60°C

5.7 ATEX Documentation

Notes about operation of the Beckhoff terminal systems in potentially explosive areas (ATEX)

Pay also attention to the continuative documentation

Notes about operation of the Beckhoff terminal systems in potentially explosive areas (ATEX)

that is available in the download area of the Beckhoff homepage http:\\www.beckhoff.com!

6 KS2000 Configuration Software

6.1 KS2000 - Introduction

The KS2000 configuration software permits configuration, commissioning and parameterization of bus couplers, of the affiliated bus terminals and of Fieldbus Box Modules. The connection between bus coupler / Fieldbus Box Module and the PC is established by means of the serial configuration cable or the fieldbus.

Fig. 21: KS2000 configuration software

Configuration

You can configure the Fieldbus stations with the Configuration Software KS2000 offline. That means, setting up a terminal station with all settings on the couplers and terminals resp. the Fieldbus Box Modules can be prepared before the commissioning phase. Later on, this configuration can be transferred to the terminal station in the commissioning phase by means of a download. For documentation purposes, you are provided with the breakdown of the terminal station, a parts list of modules used and a list of the parameters you have modified. After an upload, existing fieldbus stations are at your disposal for further editing.

Parameterization

KS2000 offers simple access to the parameters of a fieldbus station: specific high-level dialogs are available for all bus couplers, all intelligent bus terminals and Fieldbus Box modules with the aid of which settings can be modified easily. Alternatively, you have full access to all internal registers of the bus couplers and intelligent terminals. Refer to the register description for the meanings of the registers.

Commissioning

The KS2000 software facilitates commissioning of machine components or their fieldbus stations: Configured settings can be transferred to the fieldbus modules by means of a download. After a *login* to the terminal station, it is possible to define settings in couplers, terminals and Fieldbus Box modules directly *online*. The same high-level dialogs and register access are available for this purpose as in the configuration phase.

The KS2000 offers access to the process images of the bus couplers and Fieldbus Box modules.

- Thus, the coupler's input and output images can be observed by monitoring.
- Process values can be specified in the output image for commissioning of the output modules.

All possibilities in the *online mode* can be used in parallel with the actual fieldbus mode of the terminal station. The fieldbus protocol always has the higher priority in this case.

6.2 Parameterization with KS2000

Connect the configuration interface of your Fieldbus Coupler with the serial interface of your PC via the configuration cable and start the *KS2000* Configuration Software.

Click on the *Login* button. The configuration software will now load the information for the connected fieldbus station.
In the example shown, this is

- a BK9000 Bus Coupler for Ethernet
- a KL1xx2 Digital Input Terminal
- a KL3444 Analog Input Terminal
- a KL9010 Bus End Terminal

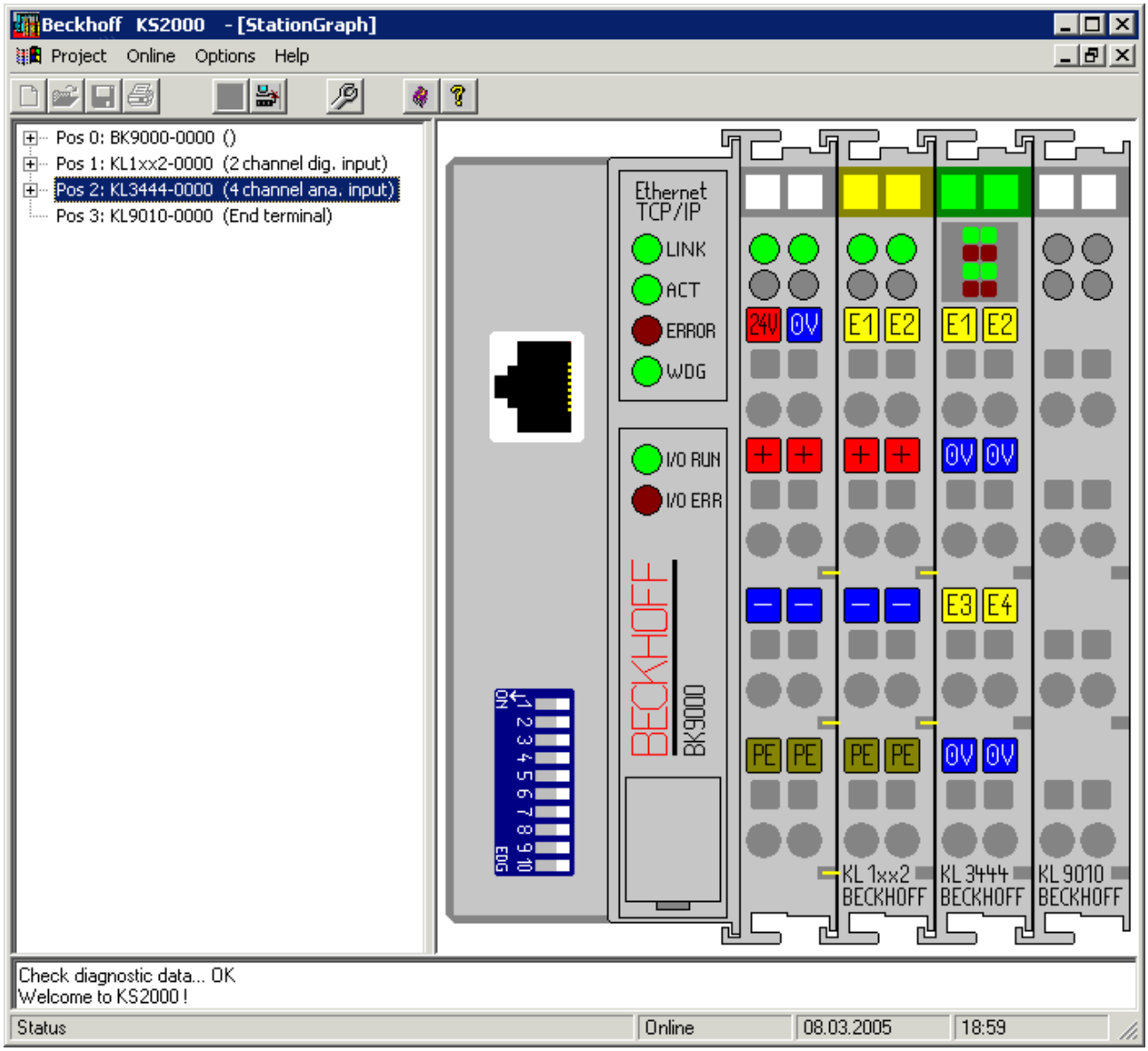

Fig. 22: Display of the fieldbus station in KS2000

The left-hand KS2000 window displays the terminals of the fieldbus station in a tree structure.
The right-hand KS2000 window contains a graphic display of the fieldbus station terminals.

In the tree structure of the left-hand window, click on the plus-sign next to the terminal whose parameters you wish to change (item 2 in the example).

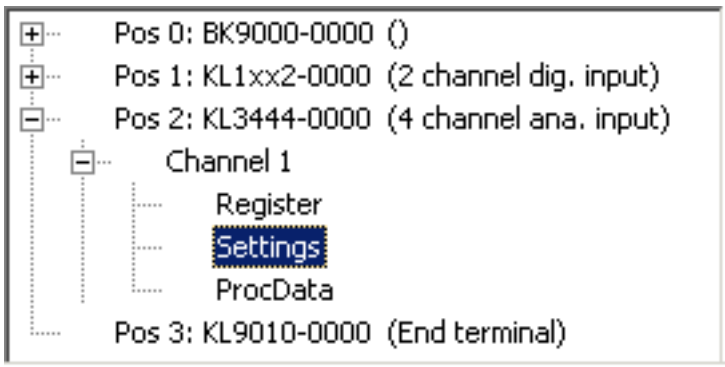

Fig. 23: KS2000 tree branch for channel 1 of the KL3444

For the KL3404, the branches *Register*, *Settings* and *ProcData* are displayed:

- Register [▶ 39] enables direct access to the KL3444 registers.
- Dialog masks for the parameterization of the KL3444 can be found under Settings [▶ 37].
- ProcData displays the KL3444 process data (in preparation).

6.3 Settings

The dialog mask for the parameterization of the KL3444, KL3448, KL3454 or KL3458 can be found under *Settings*.

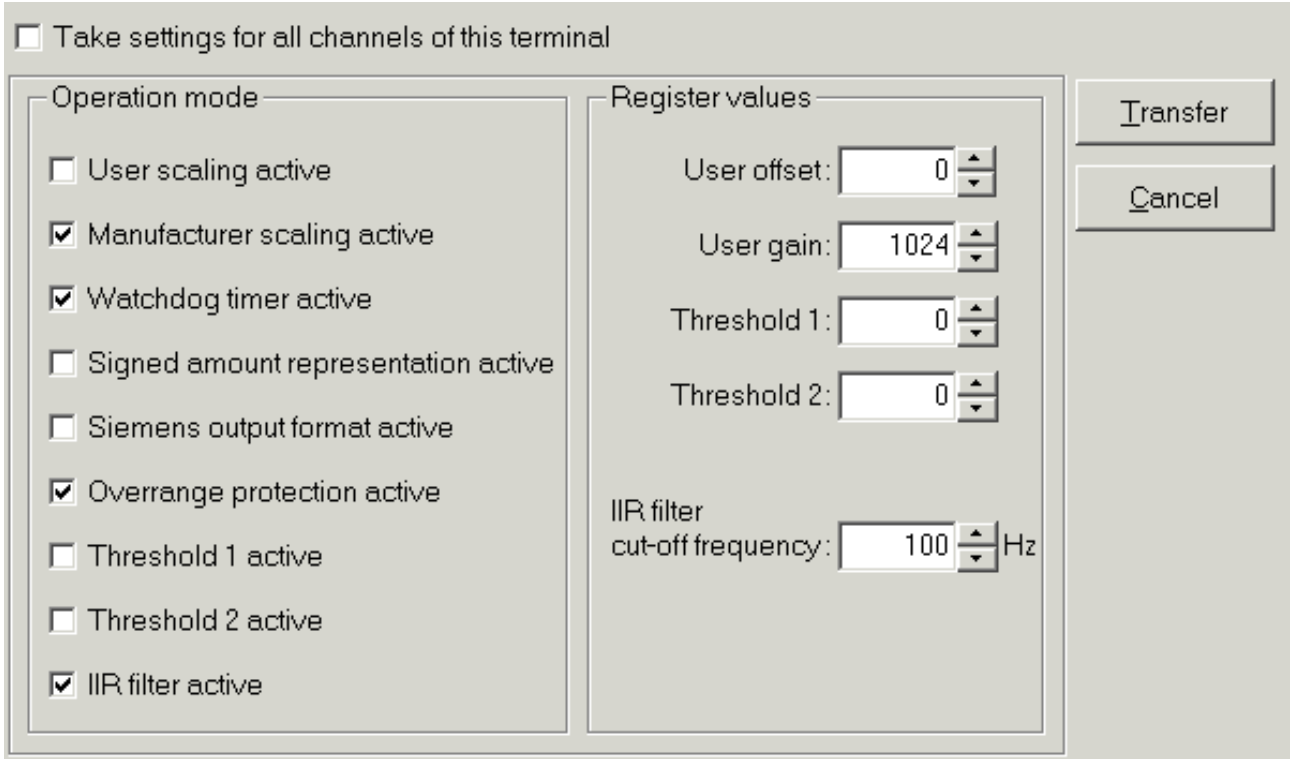

Fig. 24: Settings via KS2000

Operation mode

- **User scaling active** (R32.0 [▶ 52])
  You can activate user scaling here (default: disabled).
- **Manufacturer scaling active** (R32.1 [▶ 52])
  You can deactivate manufacturer scaling here (default: enabled).

- **Watchdog timer active** (R32.2 [▶ 52])
  You can deactivate the watchdog timer here (default: enabled).
- **Signed amount representation** (R32.3 [▶ 52])
  Here you can enable the signed amount representation (default: disabled).
- **Siemens output format** (R32.4 [▶ 52])
  You can activate Siemens output format here (default: disabled).
- **Overrange protection active** (R32.8 [▶ 52])
  You can deactivate the overrange protection here (default: enabled).
- **Threshold 1 active** (R32.9 [▶ 52])
  You can activate the threshold 1 here (default: disabled).
- **Threshold 2 active** (R32.10 [▶ 52])
  You can activate the threshold 2 here (default: disabled).
- **IIR filter active** (R32.11 [▶ 52])
  You can deactivate the digital IIR filter (first order) here (default: enabled).

Register values

- **User offset** (R33 [▶ 53])
  You can specify the user offset here.
- **User gain** (R34 [▶ 53])
  You can specify the user gain here.
- **Threshold 1** (R35 [▶ 53])
  You can specify threshold 1 here.
- **Threshold 2** (R36 [▶ 53])
  You can specify threshold 2 here.
- **IIR filter cut-off frequency** (R37 [▶ 53])
  You can specify the cut-off frequency for the digital IIR filter here.
  - KL3444, KL3454: default 200 Hz
  - KL3448, KL3458: default 100 Hz

6.4 Register

Under *Register* you can directly access the Registers of the KL3444 or KL3454. The meaning of the register is explained in the Register Overview [▶ 49].

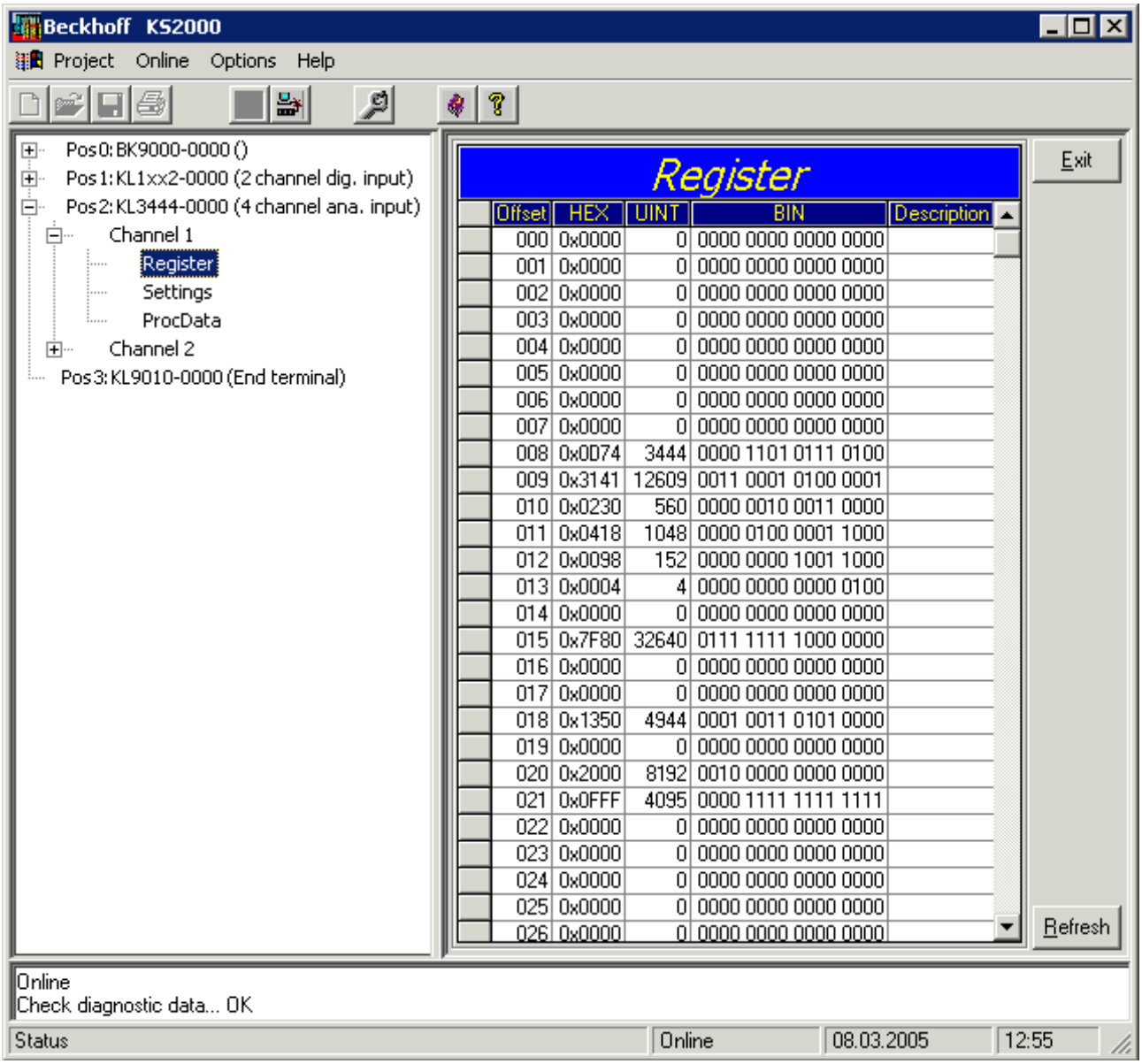

Offset	HEX	UINT	BIN	Description
000	0x0000	0	0000 0000 0000 0000	
001	0x0000	0	0000 0000 0000 0000	
002	0x0000	0	0000 0000 0000 0000	
003	0x0000	0	0000 0000 0000 0000	
004	0x0000	0	0000 0000 0000 0000	
005	0x0000	0	0000 0000 0000 0000	
006	0x0000	0	0000 0000 0000 0000	
007	0x0000	0	0000 0000 0000 0000	
008	0x0074	3444	0000 1101 0111 0100	
009	0x3141	12609	0011 0001 0100 0001	
010	0x0230	560	0000 0010 0011 0000	
011	0x0418	1048	0000 0100 0001 1000	
012	0x0098	152	0000 0000 1001 1000	
013	0x0004	4	0000 0000 0000 0100	
014	0x0000	0	0000 0000 0000 0000	
015	0x7F80	32640	0111 1111 1000 0000	
016	0x0000	0	0000 0000 0000 0000	
017	0x0000	0	0000 0000 0000 0000	
018	0x1350	4944	0001 0011 0101 0000	
019	0x0000	0	0000 0000 0000 0000	
020	0x2000	8192	0010 0000 0000 0000	
021	0x0FFF	4095	0000 1111 1111 1111	
022	0x0000	0	0000 0000 0000 0000	
023	0x0000	0	0000 0000 0000 0000	
024	0x0000	0	0000 0000 0000 0000	
025	0x0000	0	0000 0000 0000 0000	
026	0x0000	0	0000 0000 0000 0000	

Fig. 25: Register view in KS2000

6.5 Sample program for KL register communication via EtherCAT on KL3314 exemplary

Using the sample programs

This document contains sample applications of our products for certain areas of application. The application notes provided here are based on typical features of our products and only serve as examples. The notes contained in this document explicitly do not refer to specific applications. The customer is therefore responsible for assessing and deciding whether the product is suitable for a particular application. We accept no responsibility for the completeness and correctness of the source code contained in this document. We reserve the right to modify the content of this document at any time and accept no responsibility for errors and missing information.

Program description / function

This example program (TwinCAT 3) provides change of single register values of the KL3314 as selection of the element type, characteristical settings of the feature register R32 and user scaling offset and gain (R33/R34) similar as per KS2000.

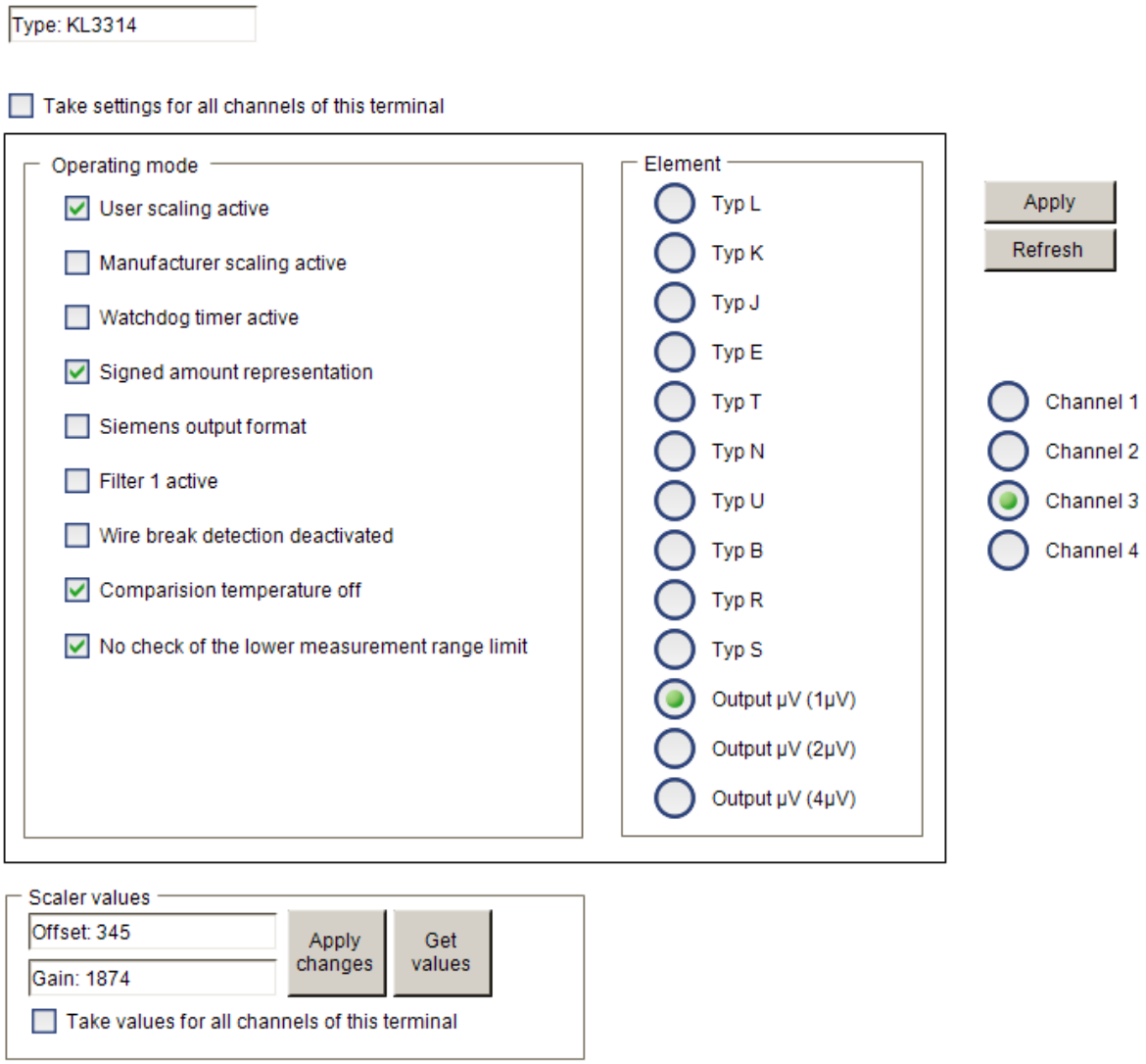

Fig. 26: Settings of KL3314 via visualisation of TwinCAT 3

At least following configuration setup shall be present:

[coupler (e.g. BK1120) or embedded PC] + KL3314 + KL9010.

Download:
https://infosys.beckhoff.com/content/1033/kl344x_kl345x/Resources/zip/5996114571.zip

Preparations for starting the sample programs (tnzip file / TwinCAT 3)

- Click on the download button to save the Zip archive locally on your hard disk, then unzip the *.tnzip archive file in a temporary folder.

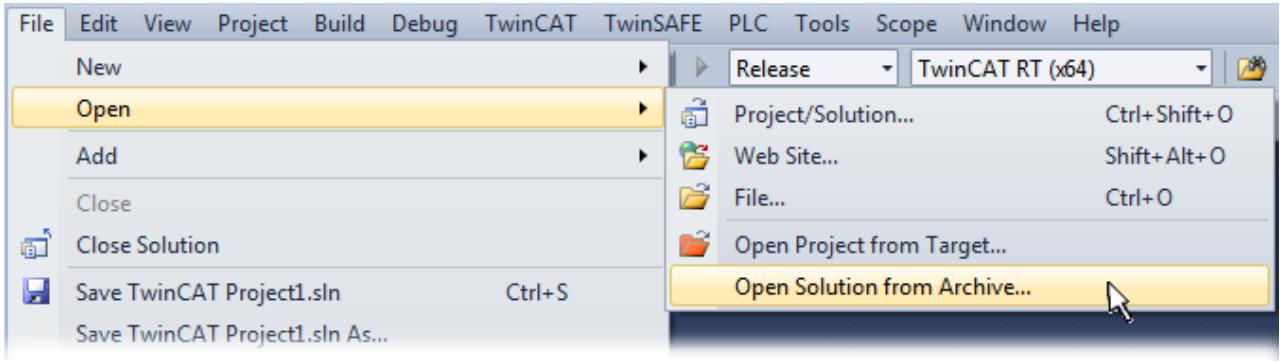

Fig. 27: Opening the *. tnzip archive

- Select the .tnzip file (sample program).
- A further selection window opens. Select the destination directory for storing the project.
- For a description of the general PLC commissioning procedure and starting the program please refer to the terminal documentation or the EtherCAT system documentation.
- The EtherCAT device of the example should usually be declared your present system. After selection of the EtherCAT device in the “Solutionexplorer” select the “Adapter” tab and click on “Search...”:

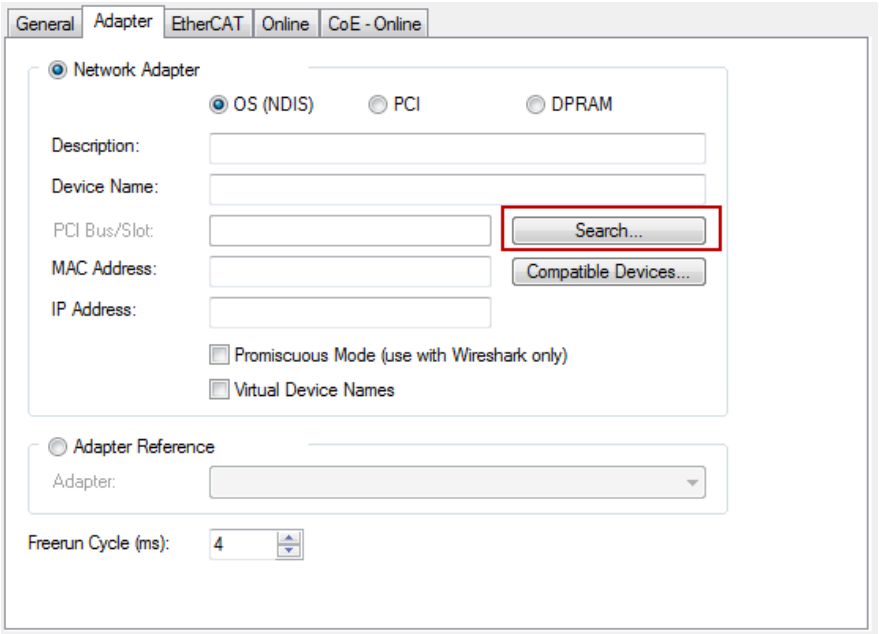

Fig. 28: Search of the existing HW configuration for the EtherCAT configuration of the example

- Checking NetId: the "EtherCAT" tab of the EtherCAT device shows the configured NetId:

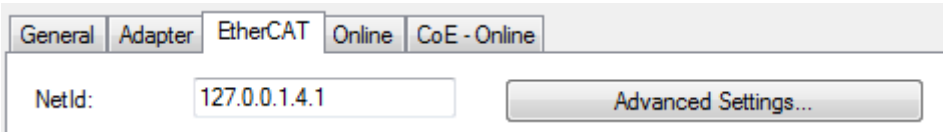

The first 4 numbers have to be identical with the project NetId of the target system. The project NetId can be viewed within the TwinCAT environment above, where a pull down menu can be opened to choose a target system (by clicking right in the text field). The number blocks are placed in brackets there next to each computer name of a target system.

- Modify the NetId: By right clicking on "EtherCAT device" within the solution explorer a context menu opens where "Change NetId..." have to be selected. The first 4 numbers of the NetId of the target computer have to be entered; the both last values are 4.1 usually.
  Example:
  - NetId of project: myComputer (123.45.67.89.1.1)
  - Entry via „Change NetId...“: 123.45.67.89.4.1

7 Access from the User Program

7.1 Process image

KL3404 and KL3464 as well as KL3444 and KL3454

KL3404 and KL3464 as well as KL3444 and KL3454 represent themselves in the process image with up to 12 bytes of input data and 12 bytes of output data.

Format	Input data	Output data
Byte	SB1:	CB1
Word	DataIN1	DataOUT1
Byte	SB2	CB2
Word	DataIN2	DataOUT2
Byte	SB3	CB3
Word	DataIN3	DataOUT3
Byte	SB4	CB4
Word	DataIN4	DataOUT4

Key

SB n: Status byte for channel n
CB n: Control byte for channel n

DataIN n: Input data word channel n
DataOUT n: Output data word channel n

- Please refer to the Mapping [▶ 44] page for the assignment of the bytes and words to the addresses of the controller.
- The meaning of the control and status bytes is explained in *Control and status bytes*.
- In process data mode the analog values are transferred in input data words DataIN1 to DataIN4. Output data words DataOUT1 to DataOUT4 are not used.

KL3408 and KL3468 as well as KL3448 and KL3458

KL3408 and KL3468 as well as KL3448 and KL3458 represent a special case with regard to the process image:
Essentially, two four-channel terminals are accommodated in one terminal housing, which behave like two terminals for the K-bus.

Each of these eight channel analog terminals has the same process image like two four channel terminals of same signal type, plugged next to each other. The KS2000 configuration software and the TwinCAT System Manager display them like two separate four channel analog terminals.

Special treatment for 8-channel analog terminals

Regarding K-bus diagnosis for your Bus Coupler (e.g. for flashing codes, error code and error argument), note that these eight channel analog terminals are represented as two four channel terminals from a Bus Coupler perspective. If the Bus Coupler is the fault location in the event of an error, you must count each eight channel analog terminal as two terminals!

7.2 Mapping

The Bus Terminals occupy addresses within the process image of the controller. The assignment of process data (input and output data) and parameterization data (control and status bytes) to the control addresses is called mapping. The type of mapping depends on:

- the fieldbus system used
- the terminal type
- the parameterization of the Bus Coupler (conditions) such as
  - compact or full evaluation
  - Intel or Motorola format
  - word alignment switched on or off

The Bus Couplers (BKxxxx, LCxxxx) and Bus Terminal Controllers (BCxxxx, BXxxxx) are supplied with certain default settings. The default setting can be changed with the KS2000 configuration software or with a master configuration software (e.g. TwinCAT System Manager or ComProfibus).

The following tables show the mapping depending on different conditions. For information about the contents of the individual bytes please refer to the pages *Process image* and *Control and status byte*.

Compact evaluation

For compact evaluation, the analog input terminals only occupy addresses in the input process image. Control and status bytes cannot be accessed.

Compact evaluation in Intel format

Default mapping for CANopen, CANCAL, DeviceNet, ControlNet, Modbus, RS232 and RS485 coupler

	Address	Input data		Output data	
Conditions	**Word offset**	**High byte**	**Low byte**	**High byte**	**Low byte**
Complete evaluation: no Motorola format: no Word alignment: any	0	Ch1 D1	Ch1 D0	-	-
	1	Ch2 D1	Ch2 D0	-	-
	2	Ch3 D1	Ch3 D0	-	-
	3	Ch4 D1	Ch4 D0	-	-

Compact evaluation in Motorola format

Default mapping for Profibus and Interbus coupler

	Address	Input data		Output data	
Conditions	**Word offset**	**High byte**	**Low byte**	**High byte**	**Low byte**
Complete evaluation: no Motorola format: yes Word alignment: any	0	Ch1 D0	Ch1 D1	-	-
	1	Ch2 D0	Ch2 D1	-	-
	2	Ch3 D0	Ch3 D1	-	-
	3	Ch4 D0	Ch4 D1	-	-

Complete evaluation:

For complete evaluation, the analog input terminals occupy addresses in the input and output process image. Control and status bytes can be accessed.

Complete evaluation in Intel format

	Address	Input data		Output data	
Conditions	**Word offset**	**High byte**	**Low byte**	**High byte**	**Low byte**
Complete evaluation: yes Motorola format: no Word alignment: no	0	Ch1 D0	SB1	Ch1 D0	CB1
	1	SB2	Ch1 D1	CB2	Ch1 D1
	2	Ch2 D1	Ch2 D0	Ch2 D1	Ch2 D0
	3	Ch3 D0	SB3	Ch3 D0	CB3
	4	SB4	Ch3 D1	CB4	Ch3 D1
	5	Ch4 D1	Ch4 D0	Ch4 D1	Ch4 D0

Complete evaluation in Motorola format

	Address	Input data		Output data	
Conditions	**Word offset**	**High byte**	**Low byte**	**High byte**	**Low byte**
Complete evaluation: yes Motorola format: yes Word alignment: no	0	Ch1 D1	SB1	Ch1 D1	CB1
	1	SB2	Ch1 D0	CB2	Ch1 D0
	2	Ch2 D0	Ch2 D1	Ch2 D0	Ch2 D1
	3	Ch3 D1	SB3	Ch3 D1	CB3
	4	SB4	Ch3 D0	CB4	Ch3 D0
	5	Ch4 D0	Ch4 D1	Ch4 D0	Ch4 D1

Complete evaluation in Intel format with word alignment

Default mapping for Lightbus and Ethernet coupler and Bus Terminal Controller (BCxxxx, BXxxxx)

	Address	Input data		Output data	
Conditions	**Word offset**	**High byte**	**Low byte**	**High byte**	**Low byte**
Complete evaluation: yes Motorola format: no Word alignment: yes	0	reserved	SB1	reserved	CB1
	1	Ch1 D1	Ch1 D0	Ch1 D1	Ch1 D0
	2	reserved	SB2	reserved	CB2
	3	Ch2 D1	Ch2 D0	Ch2 D1	Ch2 D0
	4	reserved	SB3	reserved	CB3
	5	Ch3 D1	Ch3 D0	Ch3 D1	Ch3 D0
	6	reserved	SB4	reserved	CB4
	7	Ch4 D1	Ch4 D0	Ch4 D1	Ch4 D0

Complete evaluation in Motorola format with word alignment

	Address	Input data		Output data	
Conditions	**Word offset**	**High byte**	**Low byte**	**High byte**	**Low byte**
Complete evaluation: yes Motorola format: yes Word alignment: yes	0	reserved	SB1	reserved	CB1
	1	Ch1 D0	Ch1 D1	Ch1 D0	Ch1 D1
	2	reserved	SB2	reserved	CB2
	3	Ch2 D0	Ch2 D1	Ch2 D0	Ch2 D1
	4	reserved	SB3	reserved	CB3
	5	Ch3 D0	Ch3 D1	Ch3 D0	Ch3 D1
	6	reserved	SB4	reserved	CB4
	7	Ch4 D0	Ch4 D1	Ch4 D0	Ch4 D1

Key

Complete evaluation: In addition to the process data, the control and status bytes are also mapped into the address space.
Motorola format: Motorola or Intel format can be set.
Word alignment: In order for the channel address range to commence at a word boundary, empty bytes are inserted into the process image as appropriate.

SB n: Status byte for channel n (appears in the input process image).
CB n: Control byte for channel n (appears in the output process image).

Ch n D0: channel n, lower-order data byte
Ch n D1: channel n, higher-order data byte

reserved: This byte is assigned to the process data memory, although it has no function.
"-": This byte is not used or occupied by the terminal/module.

7.3 Control and Status Bytes

Channel 1

The control and status bytes (CB1 and SB1) for channel 1 in the process data mode [▶ 47] and for register communication [▶ 48] are described below.

Channel 2, channel 3 and channel 4

The control and status bytes of channels 2, 3 and 4 are structured like the control and status byte of channel 1.

7.3.1 Process data mode

Control byte 1 in process data mode

Control byte 1 (CB1) is located in the output image [▶ 43], and is transmitted from the controller to the terminal. In process data mode it has no function.

Bit	CB1.7	CB1.6	CB1.5	CB1.4	CB1.3	CB1.2	CB1.1	CB1.0
Name	RegAccess	-	-	-	-	-	-	-

Key

Bit	Name	Description	
CB1.7	RegAccess	0_{bin}	Register communication off (process data mode)
CB1.6 … CB1.0	-	0_{bin}	reserved

Status byte 1 in process data mode

The status byte 1 (SB1) is located in the input image [▶ 43] and is transmitted from terminal to the controller.

Bit	SB1.7	SB1.6	SB1.5	SB1.4	SB1.3	SB1.2	SB1.1	SB1.0
Name	RegAccess	Error	LimitValue 2 State		LimitValue 1 State		Overrange	Underrange

Key

Bit	Name	Description	
SB1.7	RegAccess	0_{bin}	Acknowledgment for process data mode
SB1.6	Error	1_{bin}	General error bit
SB1.5 … SB1.4	LimitValue 2 State	00_{bin}	Limit value 2 not enabled
		01_{bin}	Process data less than limit value 2
		10_{bin}	Process data greater than limit value 2
		11_{bin}	Process data equal limit value 2
SB1.3 … SB1.2	LimitValue 1 State	00_{bin}	Limit value 1 not enabled
		01_{bin}	Process data less than limit value 1
		10_{bin}	Process data greater than limit value 1
		11_{bin}	Process data equal limit value 1
SB1.1	Overrange	1_{bin}	Permissible measuring range exceeded
SB1.0	Underrange	1_{bin}	Lower measuring range limit violated

7.3.2 Register communication

Control byte 1 in register communication

Control byte 1 (CB1) is located in the output image [▶ 43], and is transmitted from the controller to the terminal.

Bit	CB1.7	CB1.6	CB1.5	CB1.4	CB1.3	CB1.2	CB1.1	CB1.0
Name	RegAccess	R/W	Reg. no.					

Key

Bit	Name	Description	
CB1.7	RegAccess	1_{bin}	Register communication switched on
CB1.6	R/W	0_{bin}	Read access
		1_{bin}	Write access
CB1.5 … CB1.0	Reg. no.	Register number: Enter here the number of the register that you wish - to read with input data word DataIN1 [▶ 43], or - to write with output data word DataOUT1 [▶ 43].	

Status byte 1 in register communication

The status byte 1 (SB1) is located in the input image [▶ 43] and is transmitted from terminal to the controller.

Bit	SB1.7	SB1.6	SB1.5	SB1.4	SB1.3	SB1.2	SB1.1	SB1.0
Name	RegAccess	R/W	Reg. no.					

Key

Bit	Name	Description	
SB1.7	RegAccess	1_{bin}	Acknowledgment for register access
SB1.6	R	0_{bin}	Read access
SB1.5 … SB1.0	Reg. no.	Number of the register that was read or written.	

7.4 Register Overview

The following registers are used to parameterize the KL3444, KL3448, KL3454 and KL3458. Each signal channel of the analog terminal has one register that can be read or written to with the aid of control, status and data bytes [▶ 43] via register communication.

Register no.	Comment		Default value		R/W	Memory
R0 [▶ 50]	Raw value of the A/D converter (X_R)		-	-	R	RAM
R1	reserved		-		-	-
...	...		...	...	...	...
R5	reserved		-	-	-	-
R6 [▶ 50]	Diagnostic register		-	-	R	RAM
R7 [▶ 50]	Command register		0x0000	0_{dec}	R/W	RAM
R8 [▶ 50]	Terminal type	KL3444:	0x0D74	3444_{dec}	R	ROM
		KL3448:	0x0D78	3448_{dec}		
		KL3454:	0x0D7E	3454_{dec}		
		KL3458:	0x0D82	3458_{dec}		
R9 [▶ 50]	Firmware version		e.g. 0x3141	e.g. $1A_{ASCII}$	R	ROM
R10 [▶ 50]	Data length (multiplex shift register)		0x0230	560_{dec}	R	ROM
R11 [▶ 50]	Signal channels		0x0418	1048_{dec}	R	ROM
R12 [▶ 50]	Minimum data length		0x0098	152_{dec}	R	ROM
R13 [▶ 50]	Data structure (data type register)		0x0004	4_{dec}	R	ROM
R14	reserved		-	-	-	-
R15 [▶ 50]	Alignment register		e.g. 0x7F80	e.g. 32640_{dec}	R/W	RAM
R16 [▶ 50]	Hardware version number		e.g. 0x0000	e.g. 0_{dec}	R/W	SEEPROM
R17 [▶ 51]	Hardware compensation: Offset (B_a)		0x0000	0_{dec}	R/W	SEEPROM
R18 [▶ 51]	Hardware compensation: Gain (A_a)		approx. 0x1350	approx. 4944_{dec}	R/W	SEEPROM
R19 [▶ 51]	Manufacturer scaling: Offset (B_h)		0x0000	0_{dec}	R/W	SEEPROM
R20 [▶ 51]	Manufacturer scaling: Gain (A_h)		typ. 0x2000	typ. 8192_{dec}	R/W	SEEPROM
R21 [▶ 51]	Overrange limit		0x0FFF	4095_{dec}	R/W	SEEPROM
R22 [▶ 51]	Under range limit		0x0000	0_{dec}	R/W	SEEPROM
R23	reserved		-	-	-	-
...	...		...	...	...	...
R30	reserved		-	-	-	-
R31 [▶ 51]	Code word register		0x0000	0_{dec}	R/W	RAM
R32 [▶ 52]	Feature register		0x0906	2310_{dec}	R/W	SEEPROM
R33 [▶ 53]	User scaling: Offset (B_w)		0x0000	0_{dec}	R/W	SEEPROM
R34 [▶ 53]	User scaling: Gain (A_w)		0x0400	1024_{dec}	R/W	SEEPROM
R35 [▶ 53]	Threshold 1 in (Y_2)		0x0000	0_{dec}	R/W	SEEPROM
R36 [▶ 53]	Threshold 2 in (Y_2)		0x0000	0_{dec}	R/W	SEEPROM
R37 [▶ 53]	Cut-off frequency of the digital IIR filter		0x0100	256_{dec}	R/W	SEEPROM
R38	reserved		-	-	-	-
...	reserved		...	...	...	...
R63	reserved		-	-	-	-

7.5 Register description

The following registers are used to parameterize the KL3444, KL3448, KL3454 and KL3458. Each signal channel of the analog terminal has one register that can be read or written to with the aid of control, status and data bytes [▶ 43] via register communication.

- **R0: Raw value A/D-C**
  Raw value of the A/D converter (X_R)
- **R6: Diagnostic register**
  The status byte is mapped to the low-order byte (bit 7 to bit 0) of register R6.
  The high-order byte (bit 15 to bit 8) of register R6 is reserved.
- **R7: Command register**
  The command register of KL3444 and KL3454 is currently not used.
- **R8: Terminal description**
  Register R8 contains the terminal identifier. e.g.:
  - KL3444: 0x0D74 (3444_{dec}) or
  - KL3454: 0x0D7E (3454_{dec})
- **R9: Firmware version**
  Register R9 contains the ASCII coding of the terminal's firmware version, e.g. **0x3141 (1A)**$_{ASCII}$. **'0x31'** corresponds to the ASCII character **'1'** and **'0x41'** to the ASCII character **'A'**. This value cannot be changed.
- **R10: Data length (multiplex shift register)**
  R10 contains the number of multiplexed shift registers and their length in bits.
- **R11: Signal channels**
  Unlike R10, this contains the number of channels that are logically present. Thus for example a shift register that is physically present can perfectly well consist of several signal channels.
- **R12: Minimum data length**
  The particular byte contains the minimum data length for a channel that is to be transferred. If the MSB is set, the control and status byte is not necessarily required for the terminal function and is not transferred to the control, if the Bus Coupler is configured accordingly.
- **R13: Data structure (data type register)**

Data type register	Meaning
0x00	Terminal with no valid data type
0x01	Byte array
0x02	Structure: 1 byte, n bytes
0x03	Word array
0x04	Structure: 1 byte, n words
0x05	Double word array
0x06	Structure: 1 byte, n double words
0x07	Structure: 1 byte, 1 double word
0x08	Structure: 1 byte, 1 double word
0x11	Byte array with variable logical channel length
0x12	Structure: 1 byte, n bytes with variable logical channel length (e.g. 60xx)
0x13	Word array with variable logical channel length
0x14	Structure: 1 byte, n words with variable logical channel length
0x15	Double word array with variable logical channel length
0x16	Structure: 1 byte, n double words with variable logical channel length

- **R15: Alignment register**
  Via the alignment register bits, the Bus Coupler arranges the address range of an analog terminal such that it starts at a byte boundary.
- **R16: Hardware version number**
  Register R16 contains the hardware version of the terminal; this value cannot be changed.

- **R17: Hardware compensation - offset (Ba)**
  This register is used for the offset compensation of the terminal (see equation 1.1). Register value (16 bit signed integer) 0x0000 (0_{dec})
- **R18: Hardware compensation - gain (Aa)**
  This register is used for the gain compensation of the terminal (see equation 1.1). Register value (16 bit signed integer x 2^{-12}): approx. 0x1350 (4944_{dec})
- **R19: Manufacturer scaling - offset (Bh)**
  This register contains the offset for the manufacturer scaling (see equation 1.3). Register value (16 bit signed integer) 0x0000 (0_{dec})
  Manufacturer scaling can be enabled via bit R32.1 [▶ 52]of the feature register.
- **R20: Manufacturer scaling - gain (Ah)**
  This register contains the gain for manufacturer scaling (see equation 1.3). Register value (16 bit signed integer x 2^{-10}): typically 0x2000 (8192_{dec})
  Manufacturer scaling can be enabled via bit R32.1 [▶ 52] of the feature register.
- **R21 over-range limit - OvRL (Ya)**
  This limit value limits the maximum measuring range of the input terminal (see equation 1.0). If it is exceeded, the associated status bit is set, and the maximum value is displayed. Register value (16 bit signed integer) 0x0FFF (4095_{dec})
- **R22 Underrange limit - UnRL (Ya)**
  If the value falls below this limit, the associated status bit is set, and the minimum value is displayed (see equation 1.0). Register value (16 bit signed integer) 0x0000 (0_{dec})
- **R31: Code word register**
  - If you write values into the user registers without first entering the user code word (0x1235) into the code word register, the terminal will not accept the supplied data.
  - If you write values into the user registers and have previously entered the user code word (0x1235) in the code word register, these values are stored in the RAM registers and in the SEEPROM registers and are therefore retained if the terminal is restarted.

    The code word is reset with each restart of the terminal.

- **R32: Feature register**
  The feature register specifies the terminal's configuration. Default: 0x0906 (2310_{dec})

Bit	R32.15	R32.14	R32.13	R32.12	R32.11	R32.10	R32.9	R32.8
Name	-	-	-	-	enIIR	enLimit2	enLimit1	enOvRP

Bit	R32.7	R32.6	R32.5	R32.4	R32.3	R32.2	R32.1	R32.0
Name	-	-	-	enSiemens	enSignRepr	enWdTimer	enManScal	enUsrScal

Key

Bit	Name	Description		Default
R32.15	-	reserved		0_{bin}
...	...	...		...
R32.12	-	reserved		0_{bin}
R32.11	enIIR	0_{bin}	digital IIR filter not active	1_{bin}
		1_{bin}	digital IIR filter active	
R32.10	enLimit2	0_{bin}	Threshold 2 not active	0_{bin}
		1_{bin}	Threshold 2 active	
R32.9	enLimit1	0_{bin}	Threshold 1 not active	0_{bin}
		1_{bin}	Threshold 1 active	
R32.8	enOvRP	0_{bin}	Overrange protection is not active	1_{bin}
		1_{bin}	Overrange protection is active: If the limit values of registers OvRL (R21) and UnRL (R22) are exceeded, the associated status bits are set and the measuring range is restricted accordingly.	
R32.7	-	reserved		0_{bin}
R32.6	-	reserved		0_{bin}
R32.5	-	reserved		0_{bin}
R32.4	enSiemens	0_{bin}	Standard output format	0_{bin}
		1_{bin}	Siemens output format The three bits with the lowest value are used for displaying status information (see below).	
R32.3	enSignRepr	0_{bin}	Two's complement representation is active	0_{bin}
		1_{bin}	Signed amount representation is active (-1_{dec} = 0x8001)	
R32.2	enWdTimer	0_{bin}	Watchdog timer is not active	1_{bin}
		1_{bin}	Watchdog timer is active (the watchdog is triggered if no process data are received for 100 ms)	
R32.1	enManScal	0_{bin}	Manufacturer scaling is active	1_{bin}
		1_{bin}	Manufacturer scaling is not active	
R32.0	enUsrScal	0_{bin}	User scaling is not active	0_{bin}
		1_{bin}	User scaling is active	

Siemens output format

If the Siemens output format is selected, the lowest three bits are used for status evaluation. The process data is represented in bits 15 to 3, with bit 15 representing the sign bit. Scaling of the measured value according to the Siemens standard has to be done via user scaling (R33, R34).

KL3444				
Measured value	**Bit 15 ... 3**	**Bit 2 X**	**Bit 1 Error**	**Bit 0 Overflow**
Measured value < 20 mA	Process data	0	0	0
Measured value > 20 mA	-	0	0	1

KL3454				
Measured value	**Bit 15 ... 3**	**Bit 2 X**	**Bit 1 wire breakage**	**Bit 0 under-/overflow**
Measured value < 4 mA	-	0	1	1
4 mA <measured value <20 mA	Process data	0	0	0
Measured value > 20 mA	-	0	0	1

- **R33: User scaling - offset (Bw)**
  This register contains the offset of the user scaling.
  User scaling can be enabled in the feature register via bit R32.0 [▶ 52].
- **R34: User scaling - gain (Aw)**
  This register contains the user scaling gain; 0x0400 (1024_{dec}) corresponds to 1.
  User scaling can be enabled in the feature register via bit R32.0 [▶ 52].
- **R35: Threshold 1 in Y2**
  If the process data are outside this threshold, the appropriate bits are set in the status byte.
- **R36: Threshold 2 in Y2**
  If the process data are outside this threshold, the appropriate bits are set in the status byte.
- **R37: Cut-off frequency of the digital IIR filter**
  This register determines the cut-off frequency of the digital IIR filter (first order). The IIR filter can be deactivated in the feature register with bit R32.11 [▶ 52].

Value	Cut-off frequency	
	KL3444, KL3454	KL3448, KL3458
0x0100 (default)	approx. 200 Hz	approx. 100 Hz
0x0200	approx. 100 Hz	approx. 50 Hz
0x0300	approx. 50 Hz	approx. 25 Hz
0x0400	approx. 20 Hz	approx. 10 Hz
other	No filter active	

7.6 Examples of Register Communication

The numbering of the bytes in the examples corresponds to the display without word alignment.

7.6.1 Example 1: reading the firmware version from Register 9

Output Data

Byte 0: Control byte	Byte 1: DataOUT1, high byte	Byte 2: DataOUT1, low byte
0x89 ($1000\ 1001_{bin}$)	0xXX	0xXX

Explanation:

- Bit 0.7 set means: Register communication switched on.
- Bit 0.6 not set means: reading the register.
- Bits 0.5 to 0.0 specify the register number 9 with $00\ 1001_{bin}$.
- The output data word (byte 1 and byte 2) has no meaning during read access. To change a register, write the required value into the output word.

Input Data (answer of the bus terminal)

Byte 0: Status byte	Byte 1: DataIN1, high byte	Byte 2: DataIN1, low byte
0x89	0x33	0x41

Explanation:

- The terminal returns the value of the control byte as a receipt in the status byte.
- The terminal returns the firmware version 0x3341 in the input data word (byte 1 and byte 2). This is to be interpreted as an ASCII code:
  - ASCII code 0x33 represents the digit 3
  - ASCII code 0x41 represents the letter A
    The firmware version is thus 3A.

7.6.2 Example 2: Writing to an user register

Code word

In normal mode all user registers are read-only with the exception of Register 31. In order to deactivate this write protection you must write the code word (0x1235) into Register 31. If a value other than 0x1235 is written into Register 31, write protection is reactivated. Please note that changes to a register only become effective after restarting the terminal (power-off/power-on).

I. Write the code word (0x1235) into Register 31.

Output Data

Byte 0: Control byte	Byte 1: DataOUT1, high byte	Byte 2: DataOUT1, low byte
0xDF (1101 1111_{bin})	0x12	0x35

Explanation:

- Bit 0.7 set means: Register communication switched on.
- Bit 0.6 set means: writing to the register.
- Bits 0.5 to 0.0 specify the register number 31 with 01 1111_{bin}.
- The output data word (byte 1 and byte 2) contains the code word (0x1235) for deactivating write protection.

Input Data (answer of the bus terminal)

Byte 0: Status byte	Byte 1: DataIN1, high byte	Byte 2: DataIN1, low byte
0x9F (1001 1111_{bin})	0xXX	0xXX

Explanation:

- The terminal returns a value as a receipt in the status byte that differs only in bit 0.6 from the value of the control byte.
- The input data word (byte 1 and byte 2) is of no importance after the write access. Any values still displayed are invalid!

II. Read Register 31 (check the set code word)

Output Data

Byte 0: Control byte	Byte 1: DataOUT1, high byte	Byte 2: DataOUT1, low byte
0x9F (1001 1111_{bin})	0xXX	0xXX

Explanation:

- Bit 0.7 set means: Register communication switched on.
- Bit 0.6 not set means: reading the register.
- Bits 0.5 to 0.0 specify the register number 31 with 01 1111_{bin}.
- The output data word (byte 1 and byte 2) has no meaning during read access.

Input Data (answer of the bus terminal)

Byte 0: Status byte	Byte 1: DataIN1, high byte	Byte 2: DataIN1, low byte
0x9F (1001 1111_{bin})	0x12	0x35

Explanation:

- The terminal returns the value of the control byte as a receipt in the status byte.

- The terminal returns the current value of the code word register in the input data word (byte 1 and byte 2).

III. Write to Register 32 (change contents of the feature register)

Output data

Byte 0: Control byte	Byte 1: DataIN1, high byte	Byte 2: DataIN1, low byte
0xE0 (1110 0000_{bin})	0x00	0x02

Explanation:

- Bit 0.7 set means: Register communication switched on.
- Bit 0.6 set means: writing to the register.
- Bits 0.5 to 0.0 indicate register number 32 with 10 0000_{bin}.
- The output data word (byte 1 and byte 2) contains the new value for the feature register.

⚠ CAUTION

Observe the register description!

The value of 0x0002 given here is just an example!
The bits of the feature register change the properties of the terminal and have a different meaning, depending on the type of terminal. Refer to the description of the feature register of your terminal (chapter *Register description*) regarding the meaning of the individual bits before changing the values.

Input data (response from the Bus Terminal)

Byte 0: Status byte	Byte 1: DataIN1, high byte	Byte 2: DataIN1, low byte
0xA0 (1010 0000_{bin})	0xXX	0xXX

Explanation:

- The terminal returns a value as a receipt in the status byte that differs only in bit 0.6 from the value of the control byte.
- The input data word (byte 1 and byte 2) is of no importance after the write access. Any values still displayed are invalid!

IV. Read Register 32 (check changed feature register)

Output Data

Byte 0: Control byte	Byte 1: DataOUT1, high byte	Byte 2: DataOUT1, low byte
0xA0 (1010 0000_{bin})	0xXX	0xXX

Explanation:

- Bit 0.7 set means: Register communication switched on.
- Bit 0.6 not set means: reading the register.
- Bits 0.5 to 0.0 indicate register number 32 with 10 0000_{bin}.
- The output data word (byte 1 and byte 2) has no meaning during read access.

Input Data (answer of the bus terminal)

Byte 0: Status byte	Byte 1: DataIN1, high byte	Byte 2: DataIN1, low byte
0xA0 (1010 0000_{bin})	0x00	0x02

Explanation:

- The terminal returns the value of the control byte as a receipt in the status byte.
- The terminal returns the current value of the feature register in the input data word (byte 1 and byte 2).

V. Write Register 31 (reset code word)

Output Data

Byte 0: Control byte	Byte 1: DataOUT1, high byte	Byte 2: DataOUT1, low byte
0xDF (1101 1111_{bin})	0x00	0x00

Explanation:

- Bit 0.7 set means: Register communication switched on.
- Bit 0.6 set means: writing to the register.
- Bits 0.5 to 0.0 specify the register number 31 with 01 1111_{bin}.
- The output data word (byte 1 and byte 2) contains 0x0000 for reactivating write protection.

Input Data (answer of the bus terminal)

Byte 0: Status byte	Byte 1: DataIN1, high byte	Byte 2: DataIN1, low byte
0x9F (1001 1111_{bin})	0xXX	0xXX

Explanation:

- The terminal returns a value as a receipt in the status byte that differs only in bit 0.6 from the value of the control byte.
- The input data word (byte 1 and byte 2) is of no importance after the write access. Any values still displayed are invalid!

8 Appendix

8.1 Support and Service

Beckhoff and their partners around the world offer comprehensive support and service, making available fast and competent assistance with all questions related to Beckhoff products and system solutions.

Beckhoff's branch offices and representatives

Please contact your Beckhoff branch office or representative for local support and service on Beckhoff products!

The addresses of Beckhoff's branch offices and representatives round the world can be found on her internet pages:

http://www.beckhoff.com

You will also find further documentation for Beckhoff components there.

Castel Maggiore (BO) 40013
Via Lirone 60/i

e-mail: info@eurotecsrl.com
Tel: +39 051/6321595
Website: www.eurotecsrl.com

C.F.: 04103780377
P.I.: 01596581205