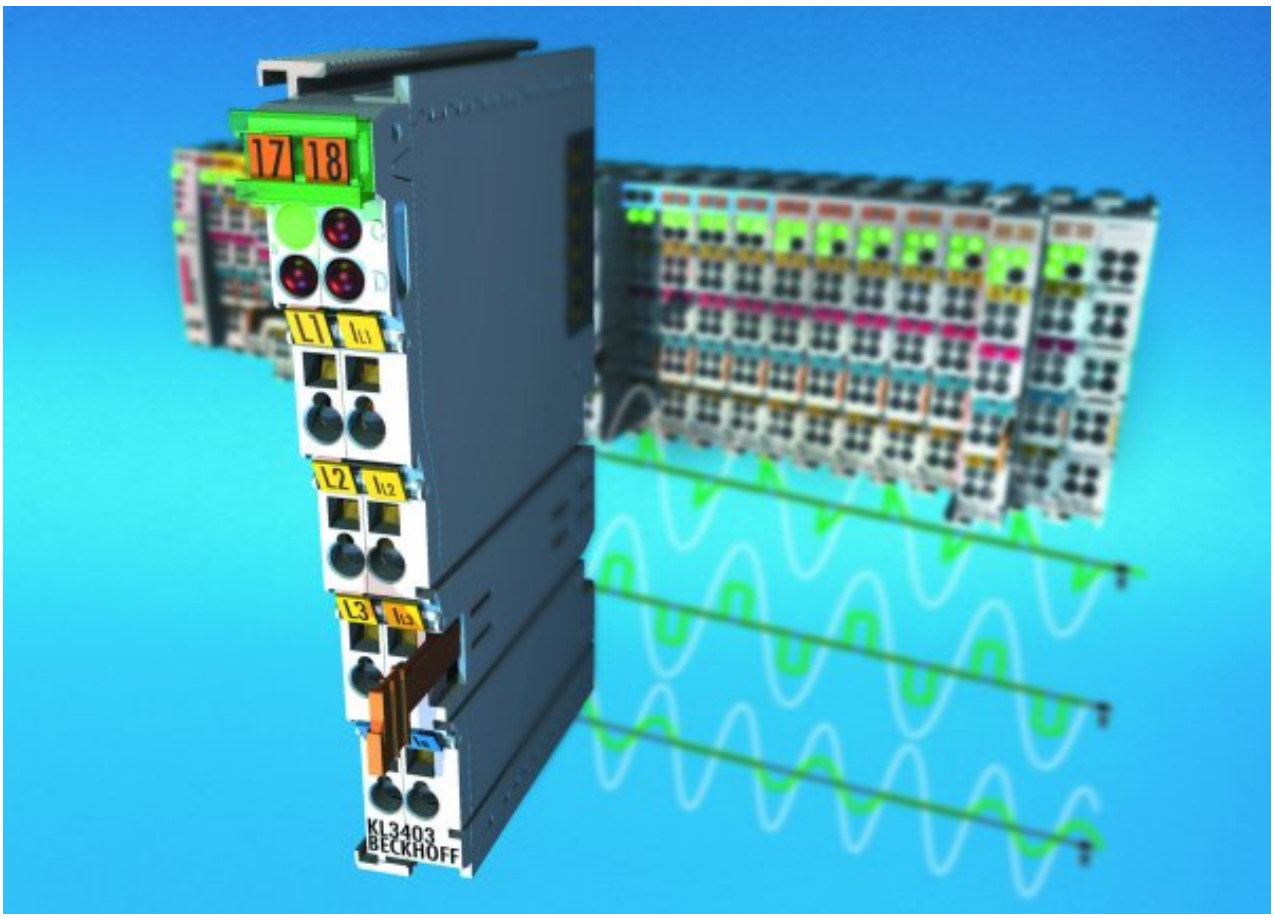

Documentation

KL3403

3-Phase Power Measurement Terminals

EUROTEC
TECNOLOGIE IMPIANTISTICHE - AUTOMAZIONE - TELECONTROLLO

BECKHOFF

Table of contents

1 Foreword ... 5
1.1 Notes on the documentation ... 5
1.2 Safety instructions ... 6
1.3 Documentation issue status ... 7
1.4 Beckhoff Identification Code (BIC) ... 9
2 Product overview ... 12
2.1 Introduction ... 12
2.2 LEDs ... 13
2.3 Basic function principles ... 14
2.4 Technical data ... 19
2.5 Current transformer ... 20
3 Mounting and wiring ... 22
3.1 Instructions for ESD protection ... 22
3.2 Installation on mounting rails ... 22
3.3 Connection ... 25
3.3.1 Connection system ... 25
3.3.2 Wiring ... 27
3.3.3 Connection ... 29
3.4 Application examples ... 30
3.4.1 Application examples for alternating current ... 31
3.4.2 Application example for DC ... 33
3.4.3 Application example with frequency converter ... 34
3.4.4 Application example for KL3403-0014 ... 36
4 KS2000 Configuration Software ... 38
4.1 KS2000 - Introduction ... 38
4.2 Parameterization with KS2000 ... 39
4.3 Settings ... 41
4.4 Sample program for KL register communication via EtherCAT on KL3314 exemplary ... 43
5 Access from the user program ... 46
5.1 Process image ... 46
5.2 Control and status bytes ... 47
5.3 Reading the process data ... 50
5.4 Register overview ... 51
5.5 Register description ... 52
5.6 Examples of Register Communication ... 55
5.6.1 Example 1: reading the firmware version from Register 9 ... 55
5.6.2 Example 2: Writing to an user register ... 56
6 Appendix ... 59
6.1 Error correction ... 59
6.2 Measuring error due to input overload ... 60
6.3 Measuring error for DC voltage measurement ... 63
6.4 Support and Service ... 64

1 Foreword

1.1 Notes on the documentation

Intended audience

This description is only intended for the use of trained specialists in control and automation engineering who are familiar with the applicable national standards.
It is essential that the documentation and the following notes and explanations are followed when installing and commissioning these components.
It is the duty of the technical personnel to use the documentation published at the respective time of each installation and commissioning.

The responsible staff must ensure that the application or use of the products described satisfy all the requirements for safety, including all the relevant laws, regulations, guidelines and standards.

Disclaimer

The documentation has been prepared with care. The products described are, however, constantly under development.

We reserve the right to revise and change the documentation at any time and without prior announcement.

No claims for the modification of products that have already been supplied may be made on the basis of the data, diagrams and descriptions in this documentation.

Trademarks

Beckhoff®, TwinCAT®, EtherCAT®, EtherCAT G®, EtherCAT G10®, EtherCAT P®, Safety over EtherCAT®, TwinSAFE®, XFC®, XTS® and XPlanar® are registered trademarks of and licensed by Beckhoff Automation GmbH. Other designations used in this publication may be trademarks whose use by third parties for their own purposes could violate the rights of the owners.

Patent Pending

The EtherCAT Technology is covered, including but not limited to the following patent applications and patents: EP1590927, EP1789857, EP1456722, EP2137893, DE102015105702 with corresponding applications or registrations in various other countries.

EtherCAT® is registered trademark and patented technology, licensed by Beckhoff Automation GmbH, Germany.

Copyright

© Beckhoff Automation GmbH & Co. KG, Germany.
The reproduction, distribution and utilization of this document as well as the communication of its contents to others without express authorization are prohibited.
Offenders will be held liable for the payment of damages. All rights reserved in the event of the grant of a patent, utility model or design.

1.2 Safety instructions

Safety regulations

Please note the following safety instructions and explanations!
Product-specific safety instructions can be found on following pages or in the areas mounting, wiring, commissioning etc.

Exclusion of liability

All the components are supplied in particular hardware and software configurations appropriate for the application. Modifications to hardware or software configurations other than those described in the documentation are not permitted, and nullify the liability of Beckhoff Automation GmbH & Co. KG.

Personnel qualification

This description is only intended for trained specialists in control, automation and drive engineering who are familiar with the applicable national standards.

Description of instructions

In this documentation the following instructions are used.
These instructions must be read carefully and followed without fail!

⚠ DANGER

Serious risk of injury!

Failure to follow this safety instruction directly endangers the life and health of persons.

⚠ WARNING

Risk of injury!

Failure to follow this safety instruction endangers the life and health of persons.

⚠ CAUTION

Personal injuries!

Failure to follow this safety instruction can lead to injuries to persons.

NOTE

Damage to environment/equipment or data loss

Failure to follow this instruction can lead to environmental damage, equipment damage or data loss.

Tip or pointer

This symbol indicates information that contributes to better understanding.

1.3 Documentation issue status

Version	Comment
3.1.0	• Design of the safety instructions adapted to IEC 82079-1 • Example program added to chapter “KS2000 Configuration software“ • Description of KL3403-0333 added • KL3403-0021 deleted • Technical data updated • Chapter *Instructions for ESD protection* added
3.0.0	• Migration
2.1.0	• Register description updated • Chapter *KS2000 settings* updated • Chapter *Control and status byte* updated • Technical data updated
2.0.1	• Firmware versions updated • Numerical values for KL3403-0022 corrected

Version	Comment
2.0.0	• Permitted ambient temperature range for KL3403-0000 and KL3403-0010 extended • Technical data updated • Chapter *Basic function principles* expanded
1.9.0	• UL notes updated • Technical data updated
1.8.0	• UL notes added • Technical data updated
1.7.0	• Application example with frequency converter updated • Technical data updated
1.6.0	• Description of KL3403-0014 added • Mounting description expanded
1.5.0	• Description of KL3403-0021, KL3403-0022, KL3403-0025 and KL3403-0026 added • Description of the flexible process image added • Energy meter can be inverted (for generator mode) • Min. values of current, voltage and power • Automatic deletion of the minimum and maximum values
1.4.1	• Feature register extended
1.4	• KL3403-0020 (20 mA) added • Chapter *Measuring error due to input overload* added • Chapter *Measuring error with DC voltage measurement* added
1.3	• Information on current, power and energy measurement resolution for KL3403-0010 terminal version corrected.
1.2	• Description of control and status bytes extended: Process data index for frequency measurement amended • Description of the KL3403 parameterization with the KS2000 software updated • Channel numbering in the descriptions adapted to the display in TwinCAT and KS2000 • Default value for measuring cycle time corrected to 50 ms • Application example with frequency converter added
1.1	• Technical data updated • Description of KL3403-0010 (5A version) added • DC application example added
1.0	• Description of KL3403 parameterization via KS2000 software added • Register description amended - Commands amended - Feature register description added - Description of the undervoltage threshold register added • Examples for register communication added • Description of control and status bytes extended: - Further process data indices amended • Technical data updated
0.4	• Technical data added • Application examples revised • Description of control and status bytes extended: • English version available
0.3	• Notes on measuring interval revised
0.2	• Further application example added • Description of the connections added • Register description amended
0.1	• First preliminary version

Firmware (FW) and hardware versions (HW)

Documen-tation, Version	KL3403-0000		KL3403-0010		KL3403-0014		KL3403-0020		KL3403-0022		KL3403-0025, KL3403-0026		KL3403-0333	
	FW	HW	FW	HW	FW	HW	FW	HW	FW	HW	FW	HW	FW	HW
3.1.0	3L	17	3L	17	4K	17	4K	17	4K	15	3L	17	4K	17
3.0.0	3L	17	3L	17	4K	17	4K	17	4K	15	3L	17	-	-
2.1.0	3L	15	3L	15	4K	16	4K	15	4K	15	3L	15		
2.0.1	3L	15	3L	15	4K	15	4K	15	4K	15	3L	15		
2.0.0	3K	15	3K	15	4J	15	4J	15	4J	15	3K	15		
1.9.0	3K	15	3K	15	4J	15	4J	15	4J	15	3K	15		
1.8.0	3K	15	3K	15	4J	15	4J	15	4J	15	3K	15		
1.7.0	3J	15	3J	14	4i	15	4i	15	4i	15	3J	15		
1.6.0	3H	10	3H	10	3H	10	4G	10	3H	10	3H	10		
1.5.0	3G	10	3G	10	-	-	4F	10	4F	10	3G	10		
1.4.1	3F	10	3F	10			4E	10	-	-	-	-		
1.4	3E	10	3E	10			4D	10						
1.3	3E	10	3E	04			-	-						
1.2	3D	09	3D	03										
1.1	3B	06	3B	00										
1.0	2E	03	-	-										

The firmware and hardware versions (delivery state) can be taken from the serial number printed on the side of the terminal.
The current firmware version is also displayed by the KS2000 [▶ 41] configuration software.

Syntax of the serial number

Structure of the serial number: WW YY FF HH

WW - week of production (calendar week)
YY - year
FF - firmware version
HH - hardware version

Example with ser. No.: 35 04 2E 03:

35 - week of production 35
04 - year of production 2004
2E - firmware version 2E
03 - hardware version 03

1.4 Beckhoff Identification Code (BIC)

The Beckhoff Identification Code (BIC) is increasingly being applied to Beckhoff products to uniquely identify the product. The BIC is represented as a Data Matrix Code (DMC, code scheme ECC200), the content is based on the ANSI standard MH10.8.2-2016.

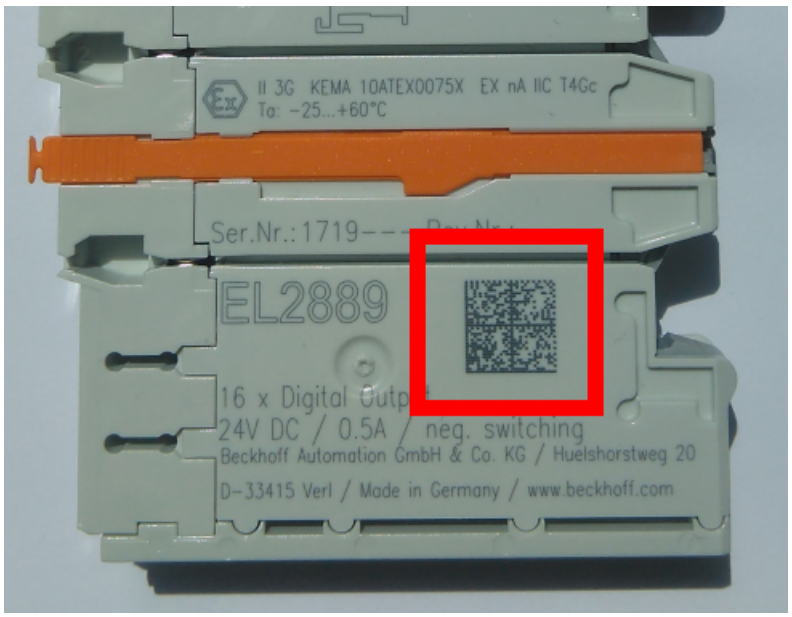

Fig. 1: BIC as data matrix code (DMC, code scheme ECC200)

The BIC will be introduced step by step across all product groups.

Depending on the product, it can be found in the following places:

- on the packaging unit
- directly on the product (if space suffices)
- on the packaging unit and the product

The BIC is machine-readable and contains information that can also be used by the customer for handling and product management.

Each piece of information can be uniquely identified using the so-called data identifier (ANSI MH10.8.2-2016). The data identifier is followed by a character string. Both together have a maximum length according to the table below. If the information is shorter, spaces are added to it. The data under positions 1 to 4 are always available.

The following information is contained:

Item no.	Type of information	Explanation	Data identifier	Number of digits incl. data identifier	Example
1	Beckhoff order number	**Beckhoff order number**	1P	8	1P072222
2	Beckhoff Traceability Number (BTN)	**Unique serial number, see note below**	S	12	SBTNk4p562d7
3	Article description	**Beckhoff article description, e.g. EL1008**	1K	32	1KEL1809
4	Quantity	**Quantity in packaging unit, e.g. 1, 10, etc.**	Q	6	Q1
5	Batch number	Optional: Year and week of production	2P	14	2P401503180016
6	ID/serial number	Optional: Present-day serial number system, e.g. with safety products	51S	12	51S678294104
7	Variant number	Optional: Product variant number on the basis of standard products	30P	32	30PF971, 2*K183
...					

Further types of information and data identifiers are used by Beckhoff and serve internal processes.

Structure of the BIC

Example of composite information from item 1 to 4 and 6. The data identifiers are marked in red for better display:

BTN

An important component of the BIC is the Beckhoff Traceability Number (BTN, item no. 2). The BTN is a unique serial number consisting of eight characters that will replace all other serial number systems at Beckhoff in the long term (e.g. batch designations on IO components, previous serial number range for safety products, etc.). The BTN will also be introduced step by step, so it may happen that the BTN is not yet coded in the BIC.

NOTE

This information has been carefully prepared. However, the procedure described is constantly being further developed. We reserve the right to revise and change procedures and documentation at any time and without prior notice. No claims for changes can be made from the information, illustrations and descriptions in this information.

2 Product overview

2.1 Introduction

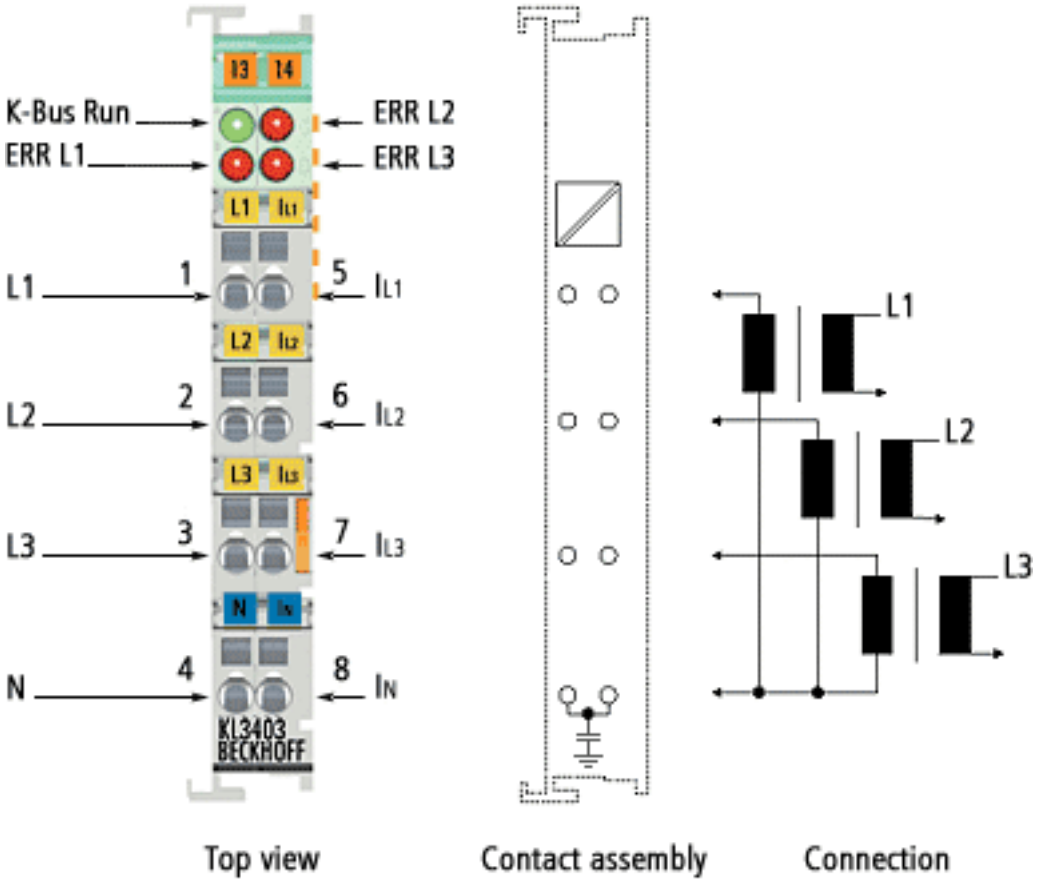

Fig. 2: KL3403

The 3-phase Power Measurement Terminal KL3403 enables the measurement of the electrical data of a three-phase supply network:

- The voltage is measured via the connection of the network at the terminal points L1, L2, L3 and N.
- The current of the three phases is fed in via current transformers [▶ 20] at the terminal points I_{L1}, I_{L2}, I_{L3} and I_N.

Non-sinusoidal voltage and current curves can also be read in with a practical accuracy of 1 % to 5 %, depending on the shape of the curve. The limit frequency of the calculations amount to 2 kHz. As the time interval for calculating the values can be adjusted, optimization is possible under a very wide range of circumstances.

Pre-processing of the KL3403 provides rms values in the process image, without requiring high computing power on the controller. From the effective values for voltage (U) and current (I), the KL3403 calculates the active power (P), the energy consumption (W) and the power factor (cos φ) for each phase. From these values the apparent power (S) and the phase shift angle (j), for example, can easily be derived.

The KL3403 thus enables a comprehensive network analysis to be carried out via the fieldbus. Based on the values for voltage, current, active power, apparent power and loading condition, the plant operator can optimize the supply of a drive or a machine and protect the plant from damage and downtime.

Versions

Several variants of the KL3403 are available.

Name	Comment	Nominal value
KL3403-0000 KS3403-0000	Standard version	1 A
KL3403-0026	Like KL3403-0000, but without EMC leakage capacitor between terminal points 4/8 [▶ 29] and the grounding contact for the mounting rail.	1 A
KL3403-0010 KS3403-0010	Power measurement terminal with higher-capacity current circuits.	5 A
KL3403-0014	Power measurement terminal with 3 additional voltage circuits instead of the current circuits. For connecting external shunts.	60 mV
KL3403-0020	Power measurement terminal with more sensitive current circuits.	20 mA
KL3403-0022	Power measurement terminal with 6 current circuits, otherwise like KL3403-0020.	20 mA
KL3403-0025	Power measurement terminal with more sensitive current circuits.	250 mA
KL3403-0333	Power measurement terminal designed for usage with 333 mV transformers.	max. 333 mV (AC), via current transformer xA / 333mV

Further details can be found in chapter Technical data [▶ 19].

2.2 LEDs

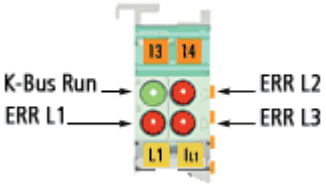

Fig. 3: LEDs

LED	No.:	Display	
K-Bus run (green)	A	K-Bus data transfer	
ERR L1 (red)	B	Voltage between L1 and N less than 10 V (default*)	*) For each channel the undervoltage threshold value can be modified with its register R36 [▶ 54].
ERR L2 (red)	C	Voltage between L2 and N less than 10 V (default*)	
ERR L3 (red)	D	Voltage between L3 and N less than 10 V (default*)	

For pin assignment see Connecting the KL3403 [▶ 29].

2.3 Basic function principles

Measuring principle

The KL3403 works with 6 analog/digital converters for recording the current and voltage values of all 3 phases. The values are sampled with a time grid of approximately 16 µs.

Recording and processing is synchronous and identical for the 3 phases. The signal processing for one phase is described below. This description applies correspondingly for all 3 phases. The total power and the total energy consumption represent the sum of the 3 phases, the mean current represents the average.

Voltage u and current i curves

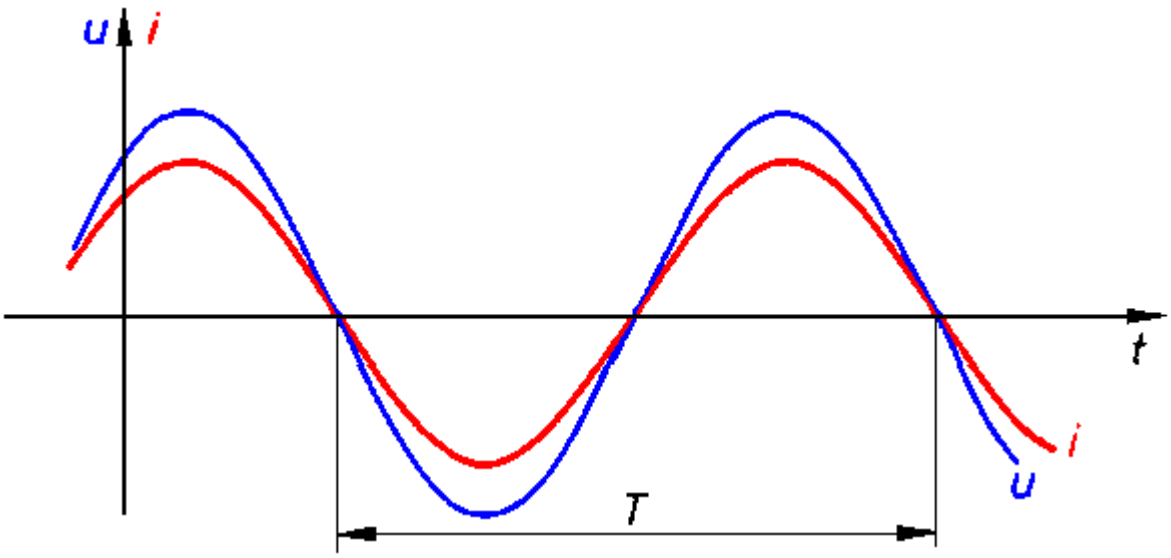

Fig. 4: Voltage u and current i curves

RMS value calculation

The rms value for voltage and current is calculated over a measuring interval, in this case the period T. The following equations are used:

$$U = \sqrt{\frac{1}{n}\sum_{1}^{n} u_{(t)}^2}$$

$$I = \sqrt{\frac{1}{n}\sum_{1}^{n} i_{(t)}^2}$$

$u_{(t)}$: instantaneous voltage value
$i_{(t)}$: instantaneous current value
n: number of measured values

For a measurement in a 50 Hz mains system (period T = 20 ms), 1280 measured values are considered within a calculation.

Measuring interval

The choice of the right measuring interval is important for the quality of the measurement. The measuring interval must be at least ¼ T. ¼ T, ½ T, T end multiples of ½ T are sensible values. If a random interval is used that does not correspond to a multiple of ½ T and is significantly less than 5 T, the measured value will fluctuate significantly.

The default setting for the measuring interval is 50 ms, corresponding to 2.5 T in a 50 Hz mains system and 3 T in a 60 Hz mains system. Experience shows that this is a good compromise between measuring speed and stability. Deviations from this value are only advisable in the event of particular measurement requirements (e.g. high measuring speed, low signal frequencies or special current curves).

Power measurement

Active power measurement

The KL3403 measures the active power P according to the following equation

$$P = \frac{1}{n} \sum_{n}^{1} u_{(t)} \cdot i_{(t)}$$

P: Active power
n: number of samples (64000 samples / s)
$u_{(t)}$: Instantaneous voltage value
$i_{(t)}$: instantaneous current value

Power $s_{(t)}$ curve

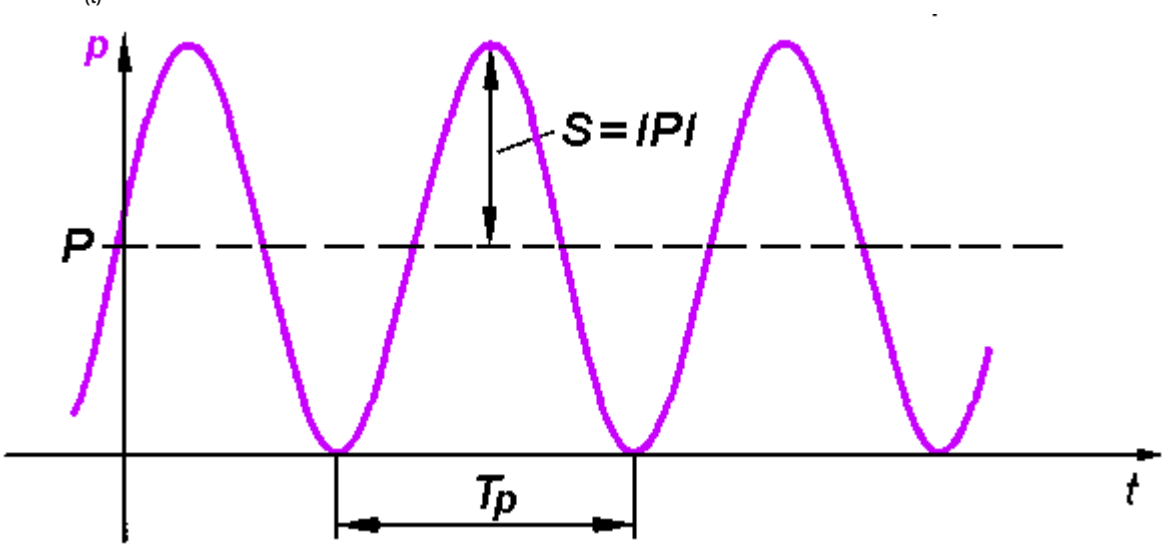

Fig. 5: Power $s_{(t)}$ curve

In the first step, the power $s_{(t)}$ is calculated at each sampling instant:

$$s_{(t)} = u_{(t)} \cdot i_{(t)}$$

The mean value over the measuring interval is calculated. Here too, the correct choice of the intervals is important, as described in section RMS value measurement (the interval can only be changed simultaneously for U, I and P).

The power frequency is twice that of the corresponding voltages and currents.

Apparent power measurement

In real networks, not all consumers are purely ohmic. Phase shifts occur between current and voltage. This does not affect the methodology for determining the rms values of voltage and current as described above.

The situation for the active power is different: Here, the product of effective voltage and effective current is the apparent power.

$$S = U \cdot I$$

The active power is smaller than the apparent power.

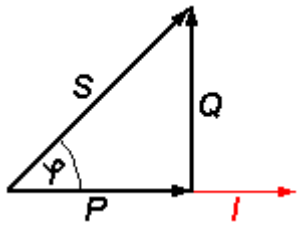

S: Apparent power
P: Active power
Q: Reactive power
φ: Phase shift angle

$u_{(t)}$, $i_{(t)}$, $p_{(t)}$ curves with phase shift angle φ

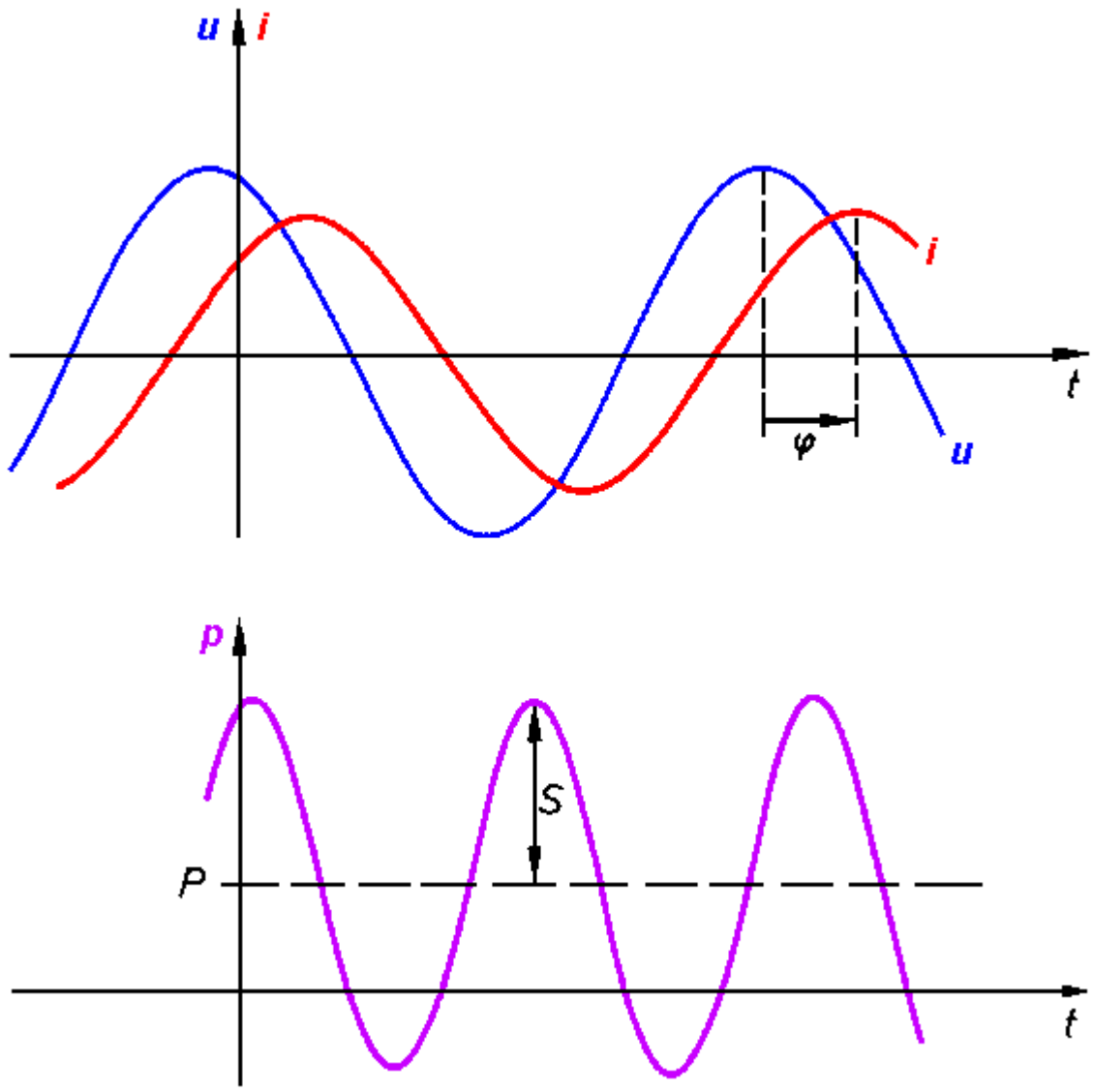

Fig. 6: $u_{(t)}$, $i_{(t)}$, $p_{(t)}$ curves with phase shift angle φ

In this context, further parameters of the mains system and its consumers are significant:

- apparent power S
- reactive power Q
- power factor cos φ

The KL3403 determines the following values:

- active power P
- effective voltage U
- effective current I

From these values, the required parameters can be calculated:

- apparent power:

$$S = U \cdot I$$

- reactive power:

$$Q = \sqrt{S^2 - P^2}$$

- Power factor:

$$\cos\varphi = \frac{P}{S}$$

Sign for power measurement

The sign of the active power P and of the power factor cos φ provide about information the direction of the energy flow. A positive sign indicates the motor mode, a negative sign indicates generator mode.

In addition, the sign of the reactive power Q indicates the direction of the phase shift between current and voltage. The diagram *Four-quadrant representation of active/reactive power in motor and generator mode* illustrates this. In motor mode (quadrant I & IV) a positive reactive power indicates an inductive load, a negative reactive power indicates a capacitive load. In generator mode (quadrant II & III), an inductive acting generator is indicated by a positive reactive power, a capacitive acting generator by a negative reactive power.

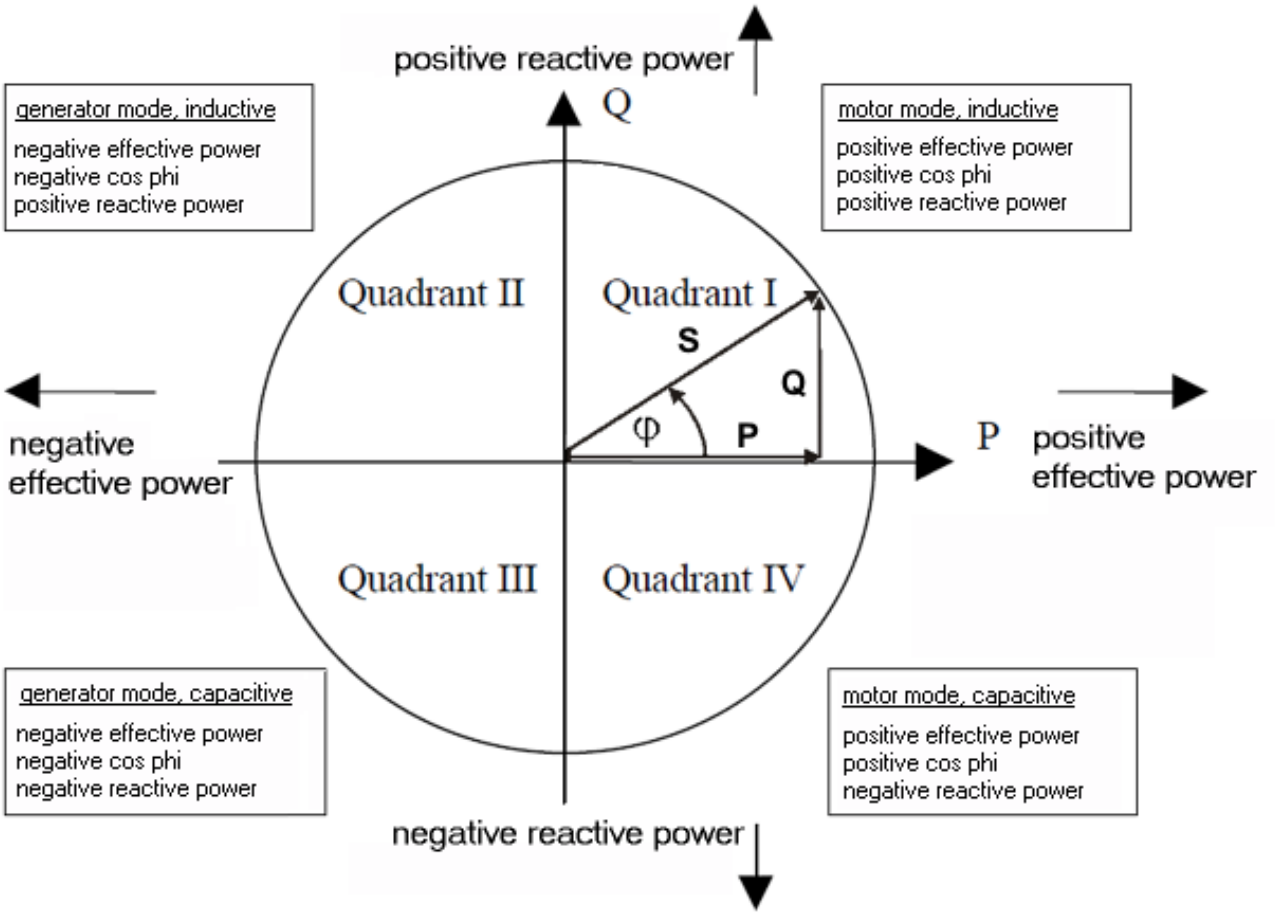

Fig. 7: Four-quadrant representation of active/reactive power in motor and generator mode

Peak current measurement

A distinction has to be made between the peak instantaneous value and the peak rms value. The peak rms value always refers to the peak value within the specified measuring interval.

Frequency measurement

The KL3403 can measure the frequency of the input signals at the voltage circuits (L1, L2, L3). The measurement takes 5 seconds (measuring interval).

Measuring error

Frequency	< 70 Hz	≥ 70 Hz	≥ 75 Hz	≥ 80 Hz	≥ 90 Hz	≥ 100 Hz
Measuring error	< 0.0 %	< 0.2 %	< 0.5 %	< 1.5 %	< 2.0 %	< 3.0 %

2.4 Technical data

Technical data		KL3403-... KS3403-...							
		0000	0010	0014	0020	0022	0025	0026	0333
Measured values		U, I	U, I	U[1]	U, I	I[2]	U, I	U, I	U, I
Calculated parameters		Active power, energy, power factor (cosj)							
Measuring voltage		max. 500 V_{AC} 3~				-	max. 500 V_{AC} 3~		
Measuring voltage according to UL specifications (see UL compliance)		max. 300 V_{AC} 3~				-	max. 300 V_{AC} 3~		
Measuring current (continuous operation)	direct (max.)	1 A	5 A	60 mV[1]	20 mA	20 mA	250 mA	1 A	333 mV (AC)
	via current transformers with transformation ratio R (max.)	R x 1 A	R x 5 A	-	R x 20 mA	R x 20 mA	R x 250 mA	R x 1 A	R x 333 mV
Voltage circuit input resistance (typical)		500 kΩ	500 kΩ	500 kΩ	500 kΩ	10 Ω[2]	500 kΩ	500 kΩ	500 kΩ
Current circuit input resistance (typical)		33 mΩ	6.8 mΩ	approx. 10 kΩ[1]	10 Ω	10 Ω	100 mΩ	33 mΩ	40 kΩ
Resolution		16 bit (internal 21 bit)							
Frequency range		10 Hz to 500 Hz							
		0 Hz to 500 Hz (with deactivated DC filter [▶ 41] and with current transformers [▶ 20], which support this frequency range)							
Limit frequency		approx. 2 kHz							
Signal type		any (taking into account the frequency range and the limit frequency)							
Measuring accuracy for sinusoidal current/voltage (total measuring range, based on the full scale value)	Voltage	0.5%	0.5%	0.5%	0.5%	-	0.5%		
	Current	0.5% 3.0%[3]	1.0% 3.0%[3]	-	0.5%	0.5%	0.5%		
	Power (calculated)	1.0% 4.0%[3]	1.5% 4.0%[3]	-	1.0%	-	1.0%		
Measuring procedure		True RMS with 64000 samples / s							
Measuring cycle time		freely configurable (50 ms per measured value pre-set)							
Dielectric strength		1500 V (terminal/K-Bus)							
Bit width in the input process image		72 bits inputs (3 x 8 bits status, 3 x 16 bits data)							
Bit width in the output process image		72 bits outputs (3 x 8 bits control, 3 x 16 bits data)							
Power supply for the electronics		via the K-bus							
Current consumption from K-bus		typically 115 mA							
Pluggable wiring		at all KSxxxx series terminals							
Permissible ambient temperature range during operation		-25°C ... + 60°C		0°C ... + 55°C					
Permissible ambient temperature range during storage		-40°C ... + 85°C		-25°C ... + 85°C					
Permissible relative air humidity		95%, no condensation							
Vibration / shock resistance		conforms to EN 60068-2-6 / EN 60068-2-27							
EMC immunity / emission		conforms to EN 61000-6-2 / EN 61000-6-4							
Weight		approx. 75 g							
Dimensions (W x H x D)		approx. 15 mm x 100 mm x 70 mm (width aligned: 12 mm)							
Mounting		on 35 mm mounting rail conforms to EN 60715							
Installation position		variable							
Protection class		IP20							
Approvals		CE, cULus		CE					

[1]) for KL3403-0014: three additional voltage circuits instead of the current circuits: 60 mV for connection of external shunts

[2]) for KL3403-22: three additional current circuits instead of the voltage circuits: also 20 mA

[3]) the measuring accuracy is reduced, if the extended temperature range is used (-25°C ... + 60°C)

2.5 Current transformer

In principle, the choice of current transformer for the KL3403 is not critical. The internal resistance within the current circuit of the KL3403 is so small that it is negligible for the calculation of the total resistances of the current loop. The transformers should be able to produce a secondary rated current of 1 A. The primary rated current I_{pn} can be selected arbitrarily. The common permissible overload of 1.2 x I_{pn} is no problem for the KL3403, but may lead to small measuring inaccuracies.

Accuracy

Please note that the overall accuracy of the set-up consisting of KL3403 and current transformers to a large degree depends on the accuracy class of the transformers.

Approval and certification

A set-up with a class 0.5 current transformer cannot be approved or authenticated. The KL3403 is not an approved billing meter according to the electricity meter standard (DIN 43 856).

Current types

The KL3403 can measure any current type up to a limiting proportion of 2 kHz. Since such currents are frequently created by inverters and may contain frequencies of less than 50 Hz or even a DC component, electronic transformers should be used for such applications. The KL3403 is also available as a special version with an interface for ±20 mA.

Overcurrent limiting factor FS

The overcurrent limiting factor FS of a current transformer indicates at what multiple of its primary rated current the current transformer changes to saturation mode, in order to protect the connected measuring instruments.

NOTE

Please note the rated current!

The KL3403 must not be subjected to more than 5 A for a prolonged period of time! For systems in which the over-current limiting factors of the transformers allow secondary currents of more than 5 A, additional intermediate transformers with a ratio of 5A/1A or 1A/5A should be used!

Protection against dangerous touch voltages

During appropriate operation of the KL3403 with associated current transformers, no dangerous voltages occur. The secondary voltage is in the range of a few Volts. However, the following faults may lead to excessive voltages:

- Open current circuit of one or several transformers
- Neutral conductor cut on the voltage measurement side of the KL3403
- General insulation fault

⚠ WARNING

Ensure accidental-contact protection!

The complete wiring of the KL3403 must be protected against accidental contact and equipped with associated warnings! The insulation should be designed for the maximum conductor voltage of the system to be measured!

The KL3403 allows a maximum voltage of 500 V for normal operating conditions. The conductor voltage on the current side must not exceed 500 V! For higher voltages, an intermediate transformer stage should be used!

On the voltage measurement side, a KL3403 is equipped with a protection impedance of 500 kΩ. If the neutral conductor is not connected and only one connection on the side of the voltage measurement is live, the resulting voltage against earth in a 3-phase system with a phase-to-phase voltage of 400 V_{AC} is 230 V_{AC}. This should also be measured on the side of the current measurement using a multimeter with an internal resistance of 10 MΩ, which does not represent an insulation fault.

Additional measuring instruments in the current circuit

Please note that the addition of additional measuring instruments (e.g. ammeters) in the current circuit can lead to a significant increase in the total apparent power.

Furthermore, connection I_N of the KL3403 must represent a star point for the three secondary windings. Additional measuring instruments therefore have to be potential-free and must be wired accordingly.

3 Mounting and wiring

3.1 Instructions for ESD protection

NOTE

Destruction of the devices by electrostatic discharge possible!

The devices contain components at risk from electrostatic discharge caused by improper handling.

- Please ensure you are electrostatically discharged and avoid touching the contacts of the device directly.
- Avoid contact with highly insulating materials (synthetic fibers, plastic film etc.).
- Surroundings (working place, packaging and personnel) should by grounded probably, when handling with the devices.
- Each assembly must be terminated at the right hand end with a KL9010 bus end terminal, to ensure the protection class and ESD protection.

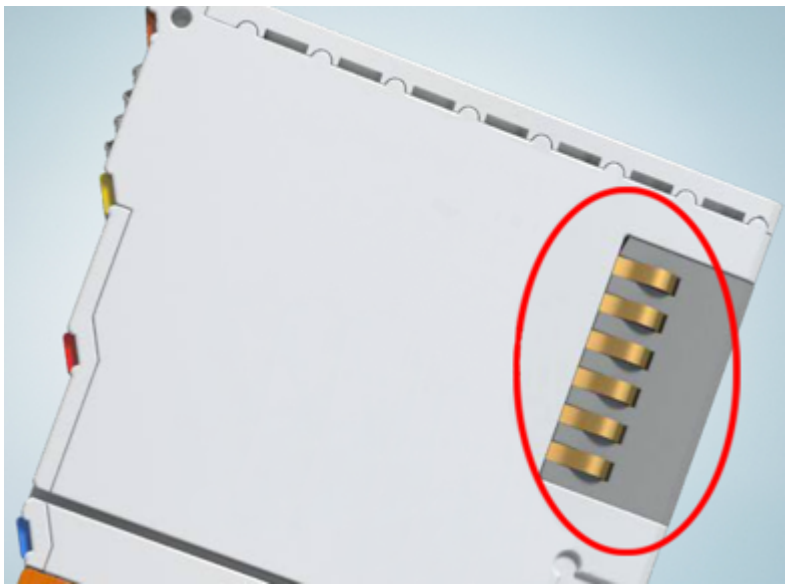

Fig. 8: Spring contacts of the Beckhoff I/O components

3.2 Installation on mounting rails

⚠ WARNING

Risk of electric shock and damage of device!

Bring the bus terminal system into a safe, powered down state before starting installation, disassembly or wiring of the bus terminals!

Assembly

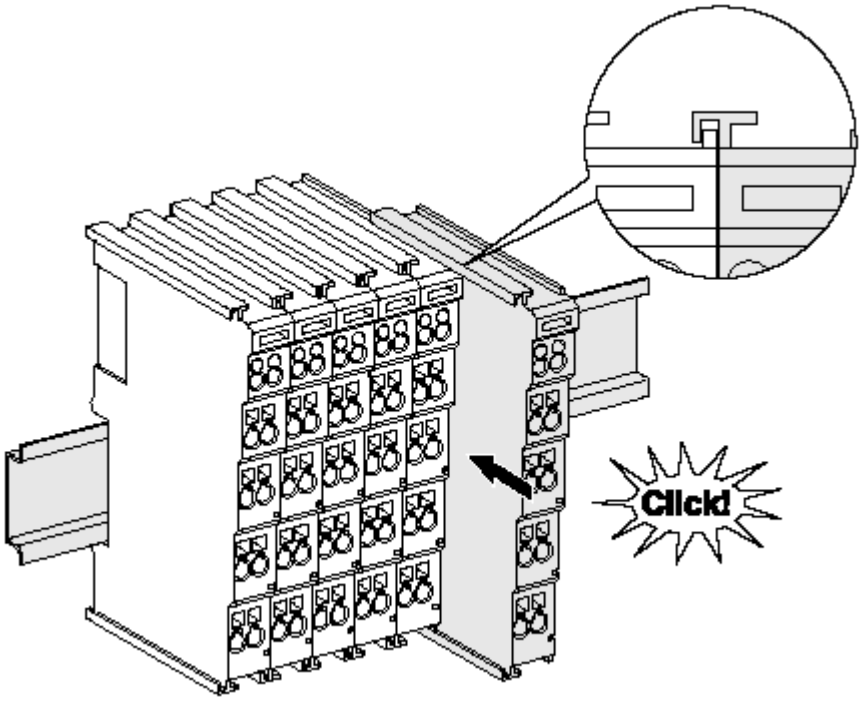

Fig. 9: Attaching on mounting rail

The bus coupler and bus terminals are attached to commercially available 35 mm mounting rails (DIN rails according to EN 60715) by applying slight pressure:

1. First attach the fieldbus coupler to the mounting rail.
2. The bus terminals are now attached on the right-hand side of the fieldbus coupler. Join the components with tongue and groove and push the terminals against the mounting rail, until the lock clicks onto the mounting rail.
   If the terminals are clipped onto the mounting rail first and then pushed together without tongue and groove, the connection will not be operational! When correctly assembled, no significant gap should be visible between the housings.

Fixing of mounting rails

The locking mechanism of the terminals and couplers extends to the profile of the mounting rail. At the installation, the locking mechanism of the components must not come into conflict with the fixing bolts of the mounting rail. To mount the mounting rails with a height of 7.5 mm under the terminals and couplers, you should use flat mounting connections (e.g. countersunk screws or blind rivets).

Disassembly

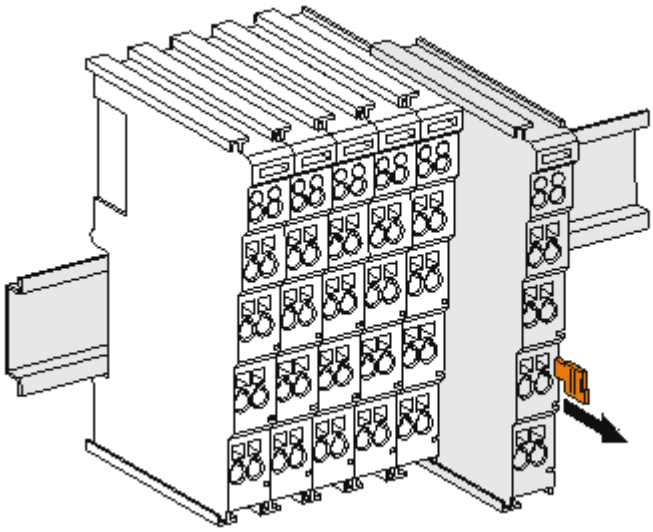

Fig. 10: Disassembling of terminal

Each terminal is secured by a lock on the mounting rail, which must be released for disassembly:

1. Pull the terminal by its orange-colored lugs approximately 1 cm away from the mounting rail. In doing so for this terminal the mounting rail lock is released automatically and you can pull the terminal out of the bus terminal block easily without excessive force.
2. Grasp the released terminal with thumb and index finger simultaneous at the upper and lower grooved housing surfaces and pull the terminal out of the bus terminal block.

Connections within a bus terminal block

The electric connections between the Bus Coupler and the Bus Terminals are automatically realized by joining the components:

- The six spring contacts of the K-Bus/E-Bus deal with the transfer of the data and the supply of the Bus Terminal electronics.
- The power contacts deal with the supply for the field electronics and thus represent a supply rail within the bus terminal block. The power contacts are supplied via terminals on the Bus Coupler (up to 24 V) or for higher voltages via power feed terminals.

Power Contacts

During the design of a bus terminal block, the pin assignment of the individual Bus Terminals must be taken account of, since some types (e.g. analog Bus Terminals or digital 4-channel Bus Terminals) do not or not fully loop through the power contacts. Power Feed Terminals (KL91xx, KL92xx or EL91xx, EL92xx) interrupt the power contacts and thus represent the start of a new supply rail.

PE power contact

The power contact labeled PE can be used as a protective earth. For safety reasons this contact mates first when plugging together, and can ground short-circuit currents of up to 125 A.

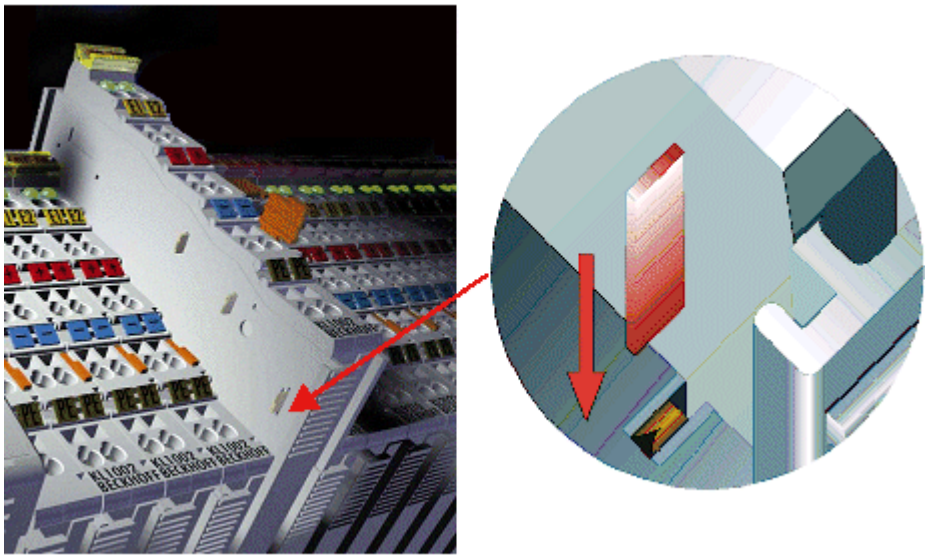

Fig. 11: Power contact on left side

NOTE

Possible damage of the device

Note that, for reasons of electromagnetic compatibility, the PE contacts are capacitatively coupled to the mounting rail. This may lead to incorrect results during insulation testing or to damage on the terminal (e.g. disruptive discharge to the PE line during insulation testing of a consumer with a nominal voltage of 230 V). For insulation testing, disconnect the PE supply line at the Bus Coupler or the Power Feed Terminal! In order to decouple further feed points for testing, these Power Feed Terminals can be released and pulled at least 10 mm from the group of terminals.

⚠ WARNING

Risk of electric shock!

The PE power contact must not be used for other potentials!

3.3 Connection

3.3.1 Connection system

⚠ WARNING

Risk of electric shock and damage of device!

Bring the bus terminal system into a safe, powered down state before starting installation, disassembly or wiring of the bus terminals!

Overview

The Bus Terminal system offers different connection options for optimum adaptation to the respective application:

- The terminals of ELxxxx and KLxxxx series with standard wiring include electronics and connection level in a single enclosure.
- The terminals of ESxxxx and KSxxxx series feature a pluggable connection level and enable steady wiring while replacing.
- The High Density Terminals (HD Terminals) include electronics and connection level in a single enclosure and have advanced packaging density.

Standard wiring (ELxxxx / KLxxxx)

Fig. 12: Standard wiring

The terminals of ELxxxx and KLxxxx series have been tried and tested for years.
They feature integrated screwless spring force technology for fast and simple assembly.

Pluggable wiring (ESxxxx / KSxxxx)

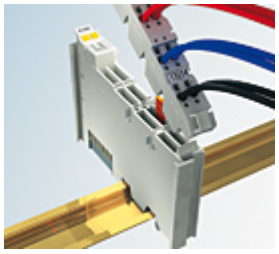

Fig. 13: Pluggable wiring

The terminals of ESxxxx and KSxxxx series feature a pluggable connection level.
The assembly and wiring procedure is the same as for the ELxxxx and KLxxxx series.
The pluggable connection level enables the complete wiring to be removed as a plug connector from the top of the housing for servicing.
The lower section can be removed from the terminal block by pulling the unlocking tab.
Insert the new component and plug in the connector with the wiring. This reduces the installation time and eliminates the risk of wires being mixed up.

The familiar dimensions of the terminal only had to be changed slightly. The new connector adds about 3 mm. The maximum height of the terminal remains unchanged.

A tab for strain relief of the cable simplifies assembly in many applications and prevents tangling of individual connection wires when the connector is removed.

Conductor cross sections between 0.08 mm^2 and 2.5 mm^2 can continue to be used with the proven spring force technology.

The overview and nomenclature of the product names for ESxxxx and KSxxxx series has been retained as known from ELxxxx and KLxxxx series.

High Density Terminals (HD Terminals)

Fig. 14: High Density Terminals

The Bus Terminals from these series with 16 terminal points are distinguished by a particularly compact design, as the packaging density is twice as large as that of the standard 12 mm Bus Terminals. Massive conductors and conductors with a wire end sleeve can be inserted directly into the spring loaded terminal point without tools.

Wiring HD Terminals

The High Density (HD) Terminals of the ELx8xx and KLx8xx series doesn't support pluggable wiring.

Ultrasonically "bonded" (ultrasonically welded) conductors

Ultrasonically “bonded" conductors

It is also possible to connect the Standard and High Density Terminals with ultrasonically "bonded" (ultrasonically welded) conductors. In this case, please note the tables concerning the wire-size width below!

3.3.2 Wiring

⚠ WARNING

Risk of electric shock and damage of device!

Bring the bus terminal system into a safe, powered down state before starting installation, disassembly or wiring of the Bus Terminals!

Terminals for standard wiring ELxxxx/KLxxxx and for pluggable wiring ESxxxx/KSxxxx

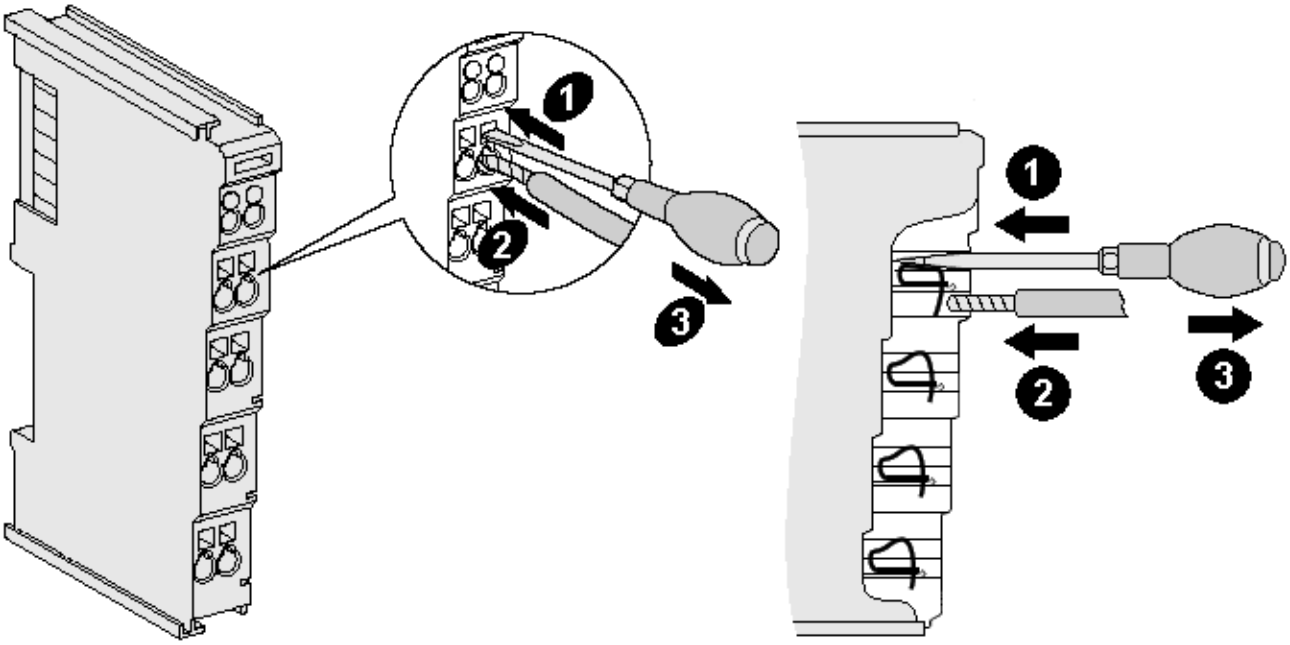

Fig. 15: Connecting a cable on a terminal point

Up to eight terminal points enable the connection of solid or finely stranded cables to the Bus Terminal. The terminal points are implemented in spring force technology. Connect the cables as follows:

1. Open a terminal point by pushing a screwdriver straight against the stop into the square opening above the terminal point. Do not turn the screwdriver or move it alternately (don't toggle).
2. The wire can now be inserted into the round terminal opening without any force.
3. The terminal point closes automatically when the pressure is released, holding the wire securely and permanently.

See the following table for the suitable wire size width.

Terminal housing	ELxxxx, KLxxxx	ESxxxx, KSxxxx
Wire size width (single core wires)	0.08 ... 2.5 mm^2	0.08 ... 2.5 mm^2
Wire size width (fine-wire conductors)	0.08 ... 2.5 mm^2	0,08 ... 2.5 mm^2
Wire size width (conductors with a wire end sleeve)	0.14 ... 1.5 mm^2	0.14 ... 1.5 mm^2
Wire stripping length	8 ... 9 mm	9 ... 10 mm

High Density Terminals (HD Terminals [▶ 26]) with 16 terminal points

The conductors of the HD Terminals are connected without tools for single-wire conductors using the direct plug-in technique, i.e. after stripping the wire is simply plugged into the terminal point. The cables are released, as usual, using the contact release with the aid of a screwdriver. See the following table for the suitable wire size width.

Terminal housing	High Density Housing
Wire size width (single core wires)	0.08 ... 1.5 mm^2
Wire size width (fine-wire conductors)	0.25 ... 1.5 mm^2
Wire size width (conductors with a wire end sleeve)	0.14 ... 0.75 mm^2
Wire size width (ultrasonically “bonded" conductors)	only 1.5 mm^2
Wire stripping length	8 ... 9 mm

3.3.3 Connection

⚠ WARNING

Risk of injury through electric shock and damage to the device!

Bring the Bus Terminals system into a safe, de-energized state before starting mounting, disassembly or wiring of the Bus Terminals!

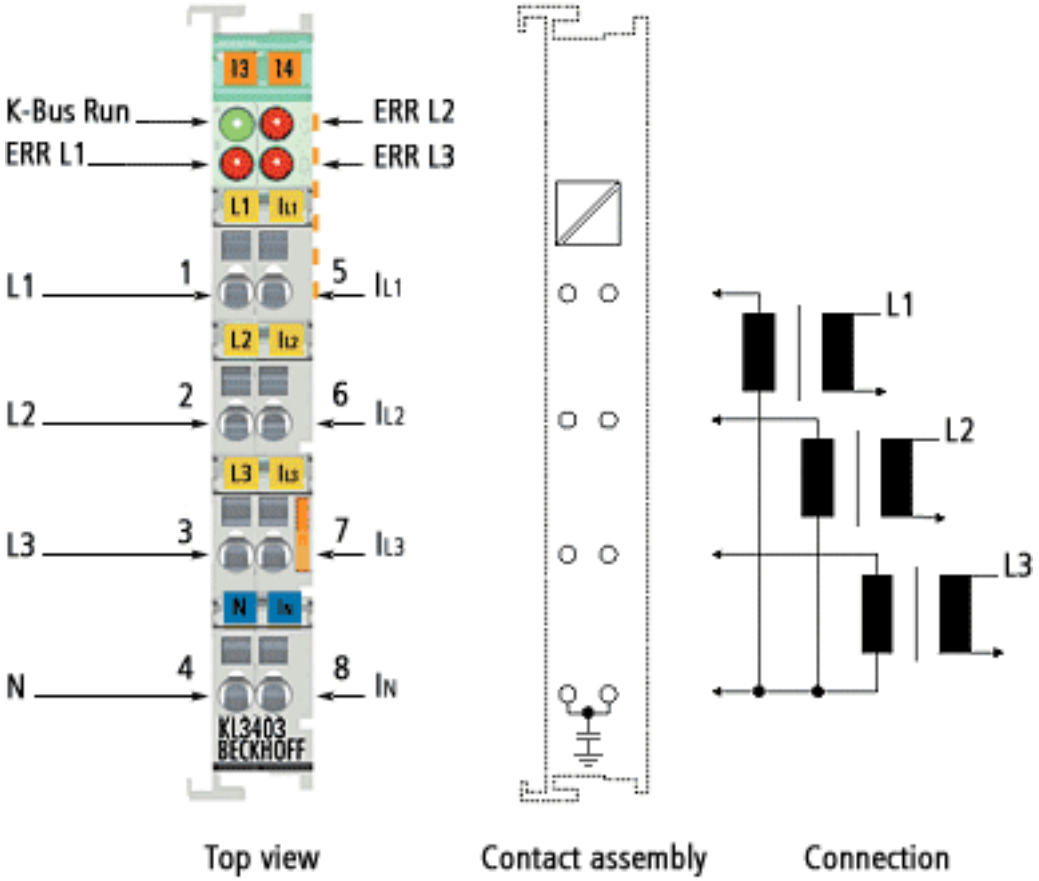

Fig. 16: Connection

Terminal point	No.:	Connection for	Comment
L1	1	Phase L1	Connections for the voltage measurement. (See note [▶ 29] under *Make sure terminal point N is zeroed or grounded!*)
L2	2	Phase L2	
L3	3	Phase L3	
N	4	Neutral conductor N (internally connected to terminal point I_N, capacitively connected to the grounding contact for the mounting rail)	
I_{L1}	5	Current transformer at L1	Connections for the current transformers. (See note [▶ 30] under *Operate the current transformer as intended!*)
I_{L2}	6	Current transformer at L2	
I_{L3}	7	Current transformer at L3	
I_N	8	Star point of the current transformers (internally connected to terminal point N, capacitively connected to the grounding contact for the mounting rail)	

*) The KL3403-0026 has no capacitive connection to the grounding contact of the mounting rail!

⚠ CAUTION

Make sure terminal point N is zeroed or grounded!

If you do not connect the terminal point N with the neutral conductor of your mains supply (e.g. if the KL3403 is used purely for current measurements [▶ 33]), terminal point N should be earthed, in order to avoid dangerous overvoltages in the event of a current transformer fault!

⚠ CAUTION

Operate the current transformer as intended!

Please note that many manufacturers do not permit their current transformers to be operated in no-load mode! Connect the KL3403 to the secondary windings of the current transformers before using the current transformer!

UL compliance

Follow the instructions indicated below, in order to comply with the specifications of Underwriters Laboratories.

c UL us	**Intended use** The terminals are exclusively intended for application with the UL-listed I/O systems of the series BKxxxx, BCxxxx, BXxxxx, LCxxxx, CXxxxx, KLxxxx, KSxxxx or KMxxxx from Beckhoff.
c UL us	**cULus verification** For the cULus verification, the Beckhoff I/O system only examined for risk of fire or electric shock (in accordance with UL508 and CSA C22.2 No. 142).
c UL us	**Phase voltage according to UL specifications 300 V max.** The maximum phase voltage of 500 V described in the technical data should be limited to 300 V for applications requiring UL approval.
c UL us	**Current transformer** Current measurement inputs with the IDs IL1, IL2, IL3, N may only be connected to isolating current transformers, which limit the available current to max. 5 A, 20 V.
c UL us	**No extended temperature range** The limited temperature range applies, if the KL3403-0000 / KS3403-0000 are used according to UL conditions (see Technical data [▶ 19]).

3.4 Application examples

Overview

- Application example for alternating current [▶ 31]
- Application example for DC [▶ 33]
- Application example with frequency converter [▶ 34]
- Application example for KL3403-0014 [▶ 36] (without internal shunts for current measurement)

3.4.1 Application examples for alternating current

⚠ WARNING

Risk of injury through electric shock and damage to the device!

Bring the Bus Terminals system into a safe, de-energized state before starting mounting, disassembly or wiring of the Bus Terminals!

⚠ CAUTION

Operate the current transformer as intended!

Please note that many manufacturers do not permit their current transformers to be operated in no-load mode! Connect the KL3403 to the secondary windings of the current transformers before using the current transformer!

Power measurement at a machine

- The voltage is measured via connections L1, L2, L3 and N.
- The current is measured via three current transformers [▶ 20] and the connections I_{L1}, I_{L2}, I_{L3} and I_N (star point of the current transformers).

NOTE

Do not confuse current and voltage circuit!

Avoid confusing the current and voltage circuit during connection, since the direct connection of mains voltage to the terminal points for the current transformers (typical input resistance 33 mΩ) would destroy the power measurement terminal!

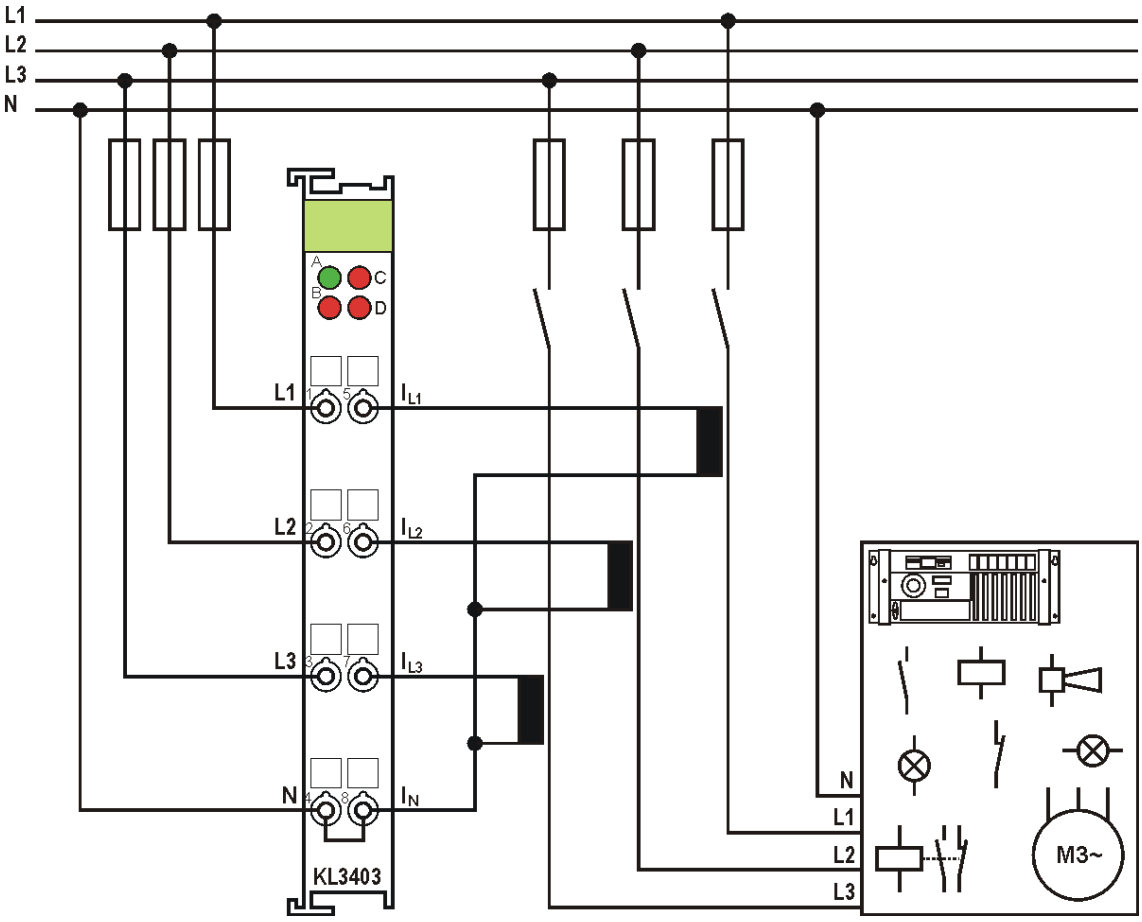

Fig. 17: Application example - power measurement at a machine

Polarity of the current transformers

If negative power values are measured on a circuit, please check whether the associated current transformer circuit is connected correctly.

Current measurement on a motor

⚠ CAUTION

Make sure terminal point N is zeroed or grounded!

If you do not connect the terminal point N with the neutral conductor of your mains supply (e.g. if the KL3403 is used purely for current measurements), terminal point N should be earthed, in order to avoid dangerous overvoltages in the event of a current transformer fault!

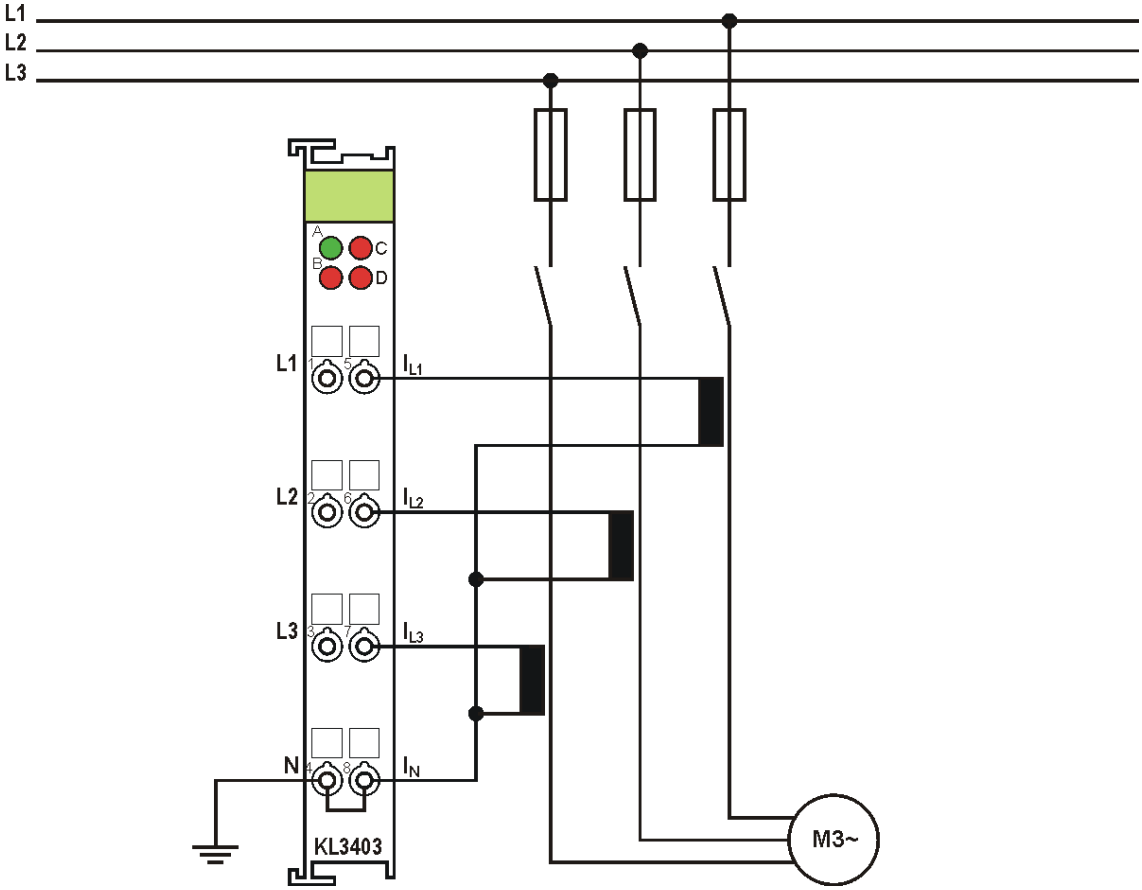

Fig. 18: Application example - current measurement at a motor

3.4.2 Application example for DC

⚠ WARNING

Risk of injury through electric shock and damage to the device!

Bring the Bus Terminals system into a safe, de-energized state before starting mounting, disassembly or wiring of the Bus Terminals!

Switch off the DC filter for DC measurements

Switch off the DC filters for the KL3403 (using the configuration software KS2000 [▶ 41] or the register communication (register R32.4 [▶ 54])) for measuring direct voltage and DC.

Power measurement at a fieldbus station

The example illustrates power measurement at three circuits of the fieldbus station. The terminal measures the:

- Power consumption of the Bus Coupler and K-Bus supply
- Power consumption of the power contacts
- Power consumption of the AS-i power supply terminal (KL9528)

NOTE

Note rated current!

In the example, the special type KL3403-0010 [▶ 19] is used with an extended current measuring range (5 A max.). The standard KL3403 type is not suitable for this application example because the current measuring range is too small (1A)!

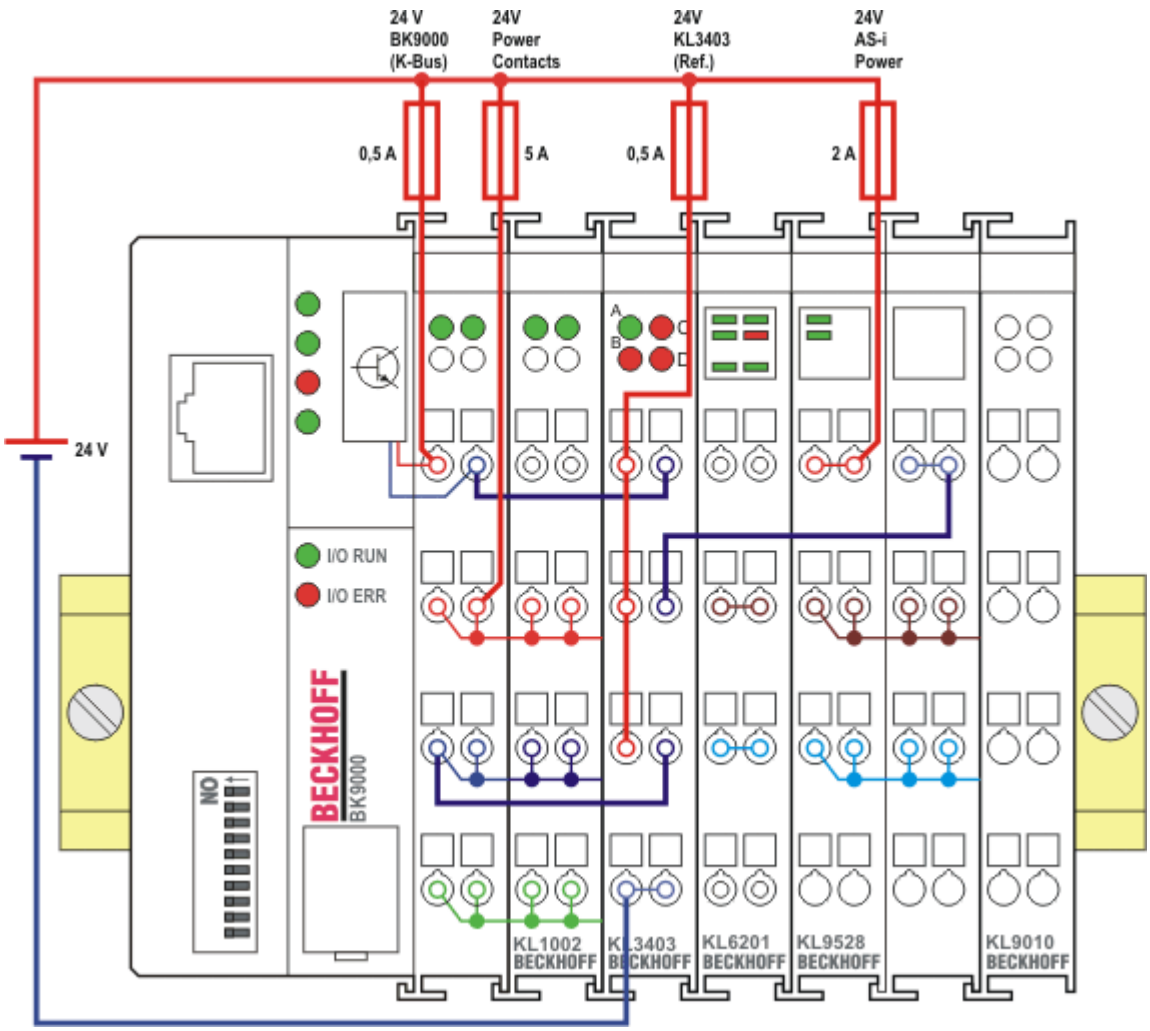

Fig. 19: Application example - power measurement at a fieldbus station

3.4.3 Application example with frequency converter

⚠ WARNING

Risk of injury through electric shock and damage to the device!

Bring the Bus Terminals system into a safe, de-energized state before starting mounting, disassembly or wiring of the Bus Terminals!

The example illustrates power measurement at several three-phase motors that are controlled by a frequency converter (AC converter), e.g. at a conveyor system. Each motor is monitored by a KL3403.

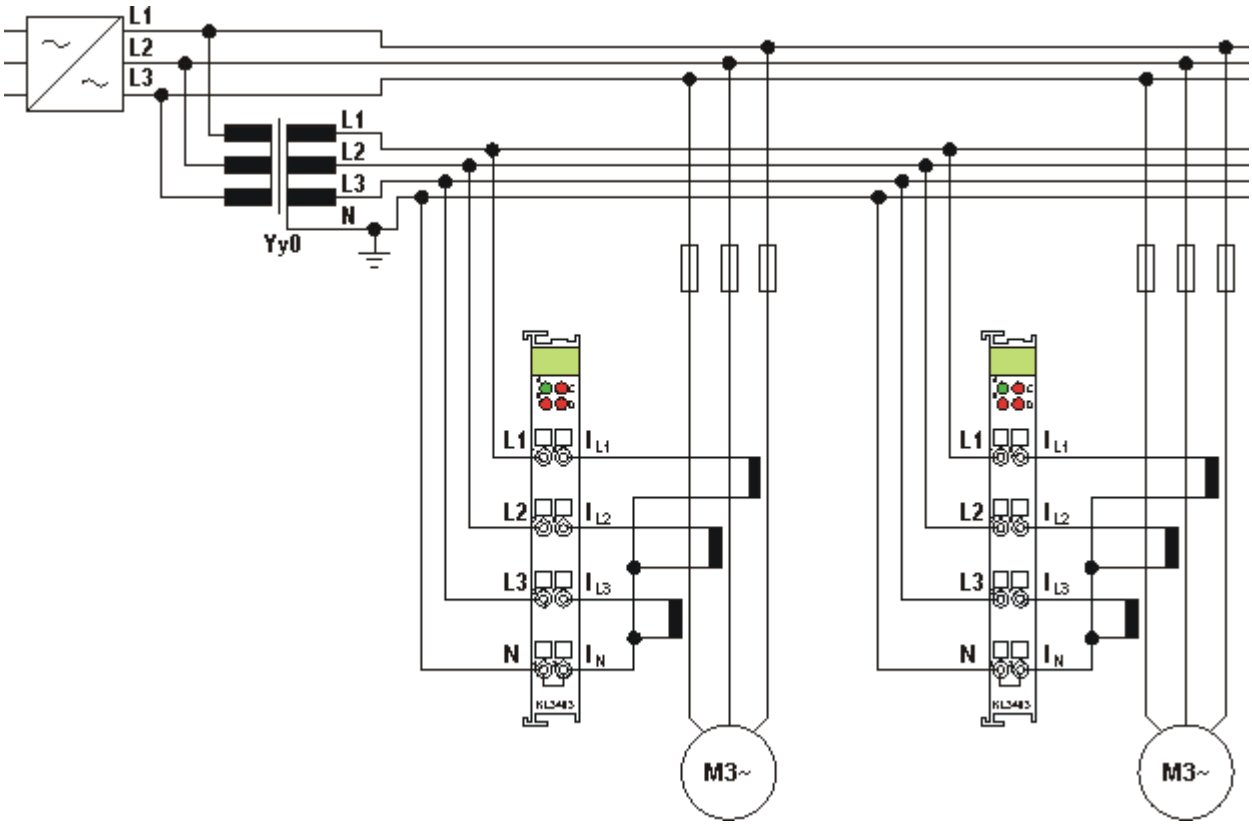

Fig. 20: Application example with frequency converter

The electrical isolation of the three-phase-transformer (Yy0) operated by the voltage circuit of the power measurement terminals enables measurement after the frequency converter.

Measuring error in the lower frequency range

If the power measurement takes place after the frequency converter, a larger measuring error is possible in the lower frequency range, particularly for voltage measurement. This error also affects the power calculation.

The three-phase transformer should have a ratio of 1:1. It must not cause a phase shift of the signal! Since high-frequency components only have little influence on the motors, any distortions caused by the three-phase transformer have little effect on the practical measurement during the transfer of the harmonics created by the frequency converter.

The power distribution is mapped very well by using a dedicated power measurement terminal for each motor. Excessive current consumption of an individual motor can be detected in good time.

It is not possible to use this method for measuring direct voltage/DC (e.g. holding currents of synchronous motors)! Practical results can be obtained for voltages/currents with a frequency above 5 Hz, depending on the three-phase transformer and current transformers used.

⚠ CAUTION

The terminal points N must be grounded!

Due to the electrical isolation through the three-phase transformer, the terminal points N of the power measurement terminals have to be grounded, in order to avoid dangerous overvoltages in the event of a fault in a current transformer!

3.4.4 Application example for KL3403-0014

⚠ WARNING

Risk of injury through electric shock and damage to the device!

Bring the Bus Terminals system into a safe, de-energized state before starting mounting, disassembly or wiring of the Bus Terminals!

The KL3403-0014 has no internal shunts for current measurement. It allows the use of external shunts. Instead of the three current circuits, the additional voltage circuits UI1, UI2 and UI3 are available for this purpose.

Connection

Cables are used to connect the voltage drop at the external shunts to terminal points UI1, UI2 and UI3 of the KL3403-0014.

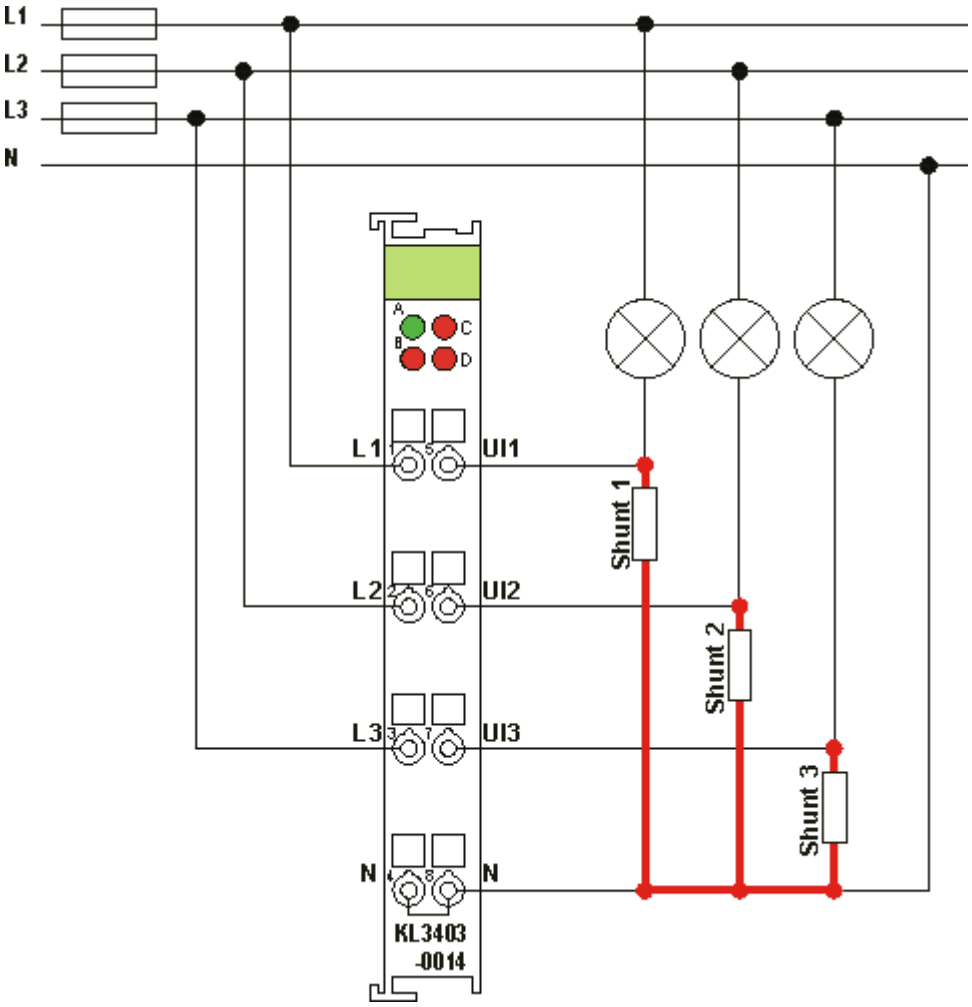

Fig. 21: Application example for KL3403-0014

The example shows a power measurement for three incandescent lamps. Three external shunts are used for the current measurement.

Voltage drop on the cables between the shunts

Note that the voltage drop on the cables between the shunts (shown in red in the diagram) distorts the measurement. It is therefore imperative that short cables with large cross-sections and as low-resistance as possible are used for these connections, in order to keep the measuring error to a minimum. Otherwise the measuring errors could be significant, since the voltage drop on this cables can be comparatively high and could result in a large error in the power calculation.

Dimensioning of the shunts

A voltage drop of 60 mV / x A is typically indicated for the shunts.

Examples

Nominal value of the shunt	60 mV / 1 A	60 mV / 25 A	60 mV / 100 A
Sample current	1 A	25 A	100 A
Current output value of the terminal	25000_{dec} (0x61A8)	25000_{dec} (0x61A8)	25000_{dec} (0x61A8)

4 KS2000 Configuration Software

4.1 KS2000 - Introduction

The KS2000 configuration software permits configuration, commissioning and parameterization of bus couplers, of the affiliated bus terminals and of Fieldbus Box Modules. The connection between bus coupler / Fieldbus Box Module and the PC is established by means of the serial configuration cable or the fieldbus.

Fig. 22: KS2000 configuration software

Configuration

You can configure the Fieldbus stations with the Configuration Software KS2000 offline. That means, setting up a terminal station with all settings on the couplers and terminals resp. the Fieldbus Box Modules can be prepared before the commissioning phase. Later on, this configuration can be transferred to the terminal station in the commissioning phase by means of a download. For documentation purposes, you are provided with the breakdown of the terminal station, a parts list of modules used and a list of the parameters you have modified. After an upload, existing fieldbus stations are at your disposal for further editing.

Parameterization

KS2000 offers simple access to the parameters of a fieldbus station: specific high-level dialogs are available for all bus couplers, all intelligent bus terminals and Fieldbus Box modules with the aid of which settings can be modified easily. Alternatively, you have full access to all internal registers of the bus couplers and intelligent terminals. Refer to the register description for the meanings of the registers.

Commissioning

The KS2000 software facilitates commissioning of machine components or their fieldbus stations: Configured settings can be transferred to the fieldbus modules by means of a download. After a *login* to the terminal station, it is possible to define settings in couplers, terminals and Fieldbus Box modules directly *online*. The same high-level dialogs and register access are available for this purpose as in the configuration phase.

The KS2000 offers access to the process images of the bus couplers and Fieldbus Box modules.

- Thus, the coupler's input and output images can be observed by monitoring.
- Process values can be specified in the output image for commissioning of the output modules.

All possibilities in the *online mode* can be used in parallel with the actual fieldbus mode of the terminal station. The fieldbus protocol always has the higher priority in this case.

4.2 Parameterization with KS2000

Connect the configuration interface of your fieldbus coupler with the serial interface of your PC via the configuration cable and start the *KS2000* Configuration Software.

Click on the *Login* button. The configuration software will now load the information for the connected fieldbus station.
In the example shown, this is

- a BK9000 Ethernet Coupler
- a KL1xx2 digital input terminal
- a KL3403 Power Measurement Terminal
- a KL9010 bus end terminal

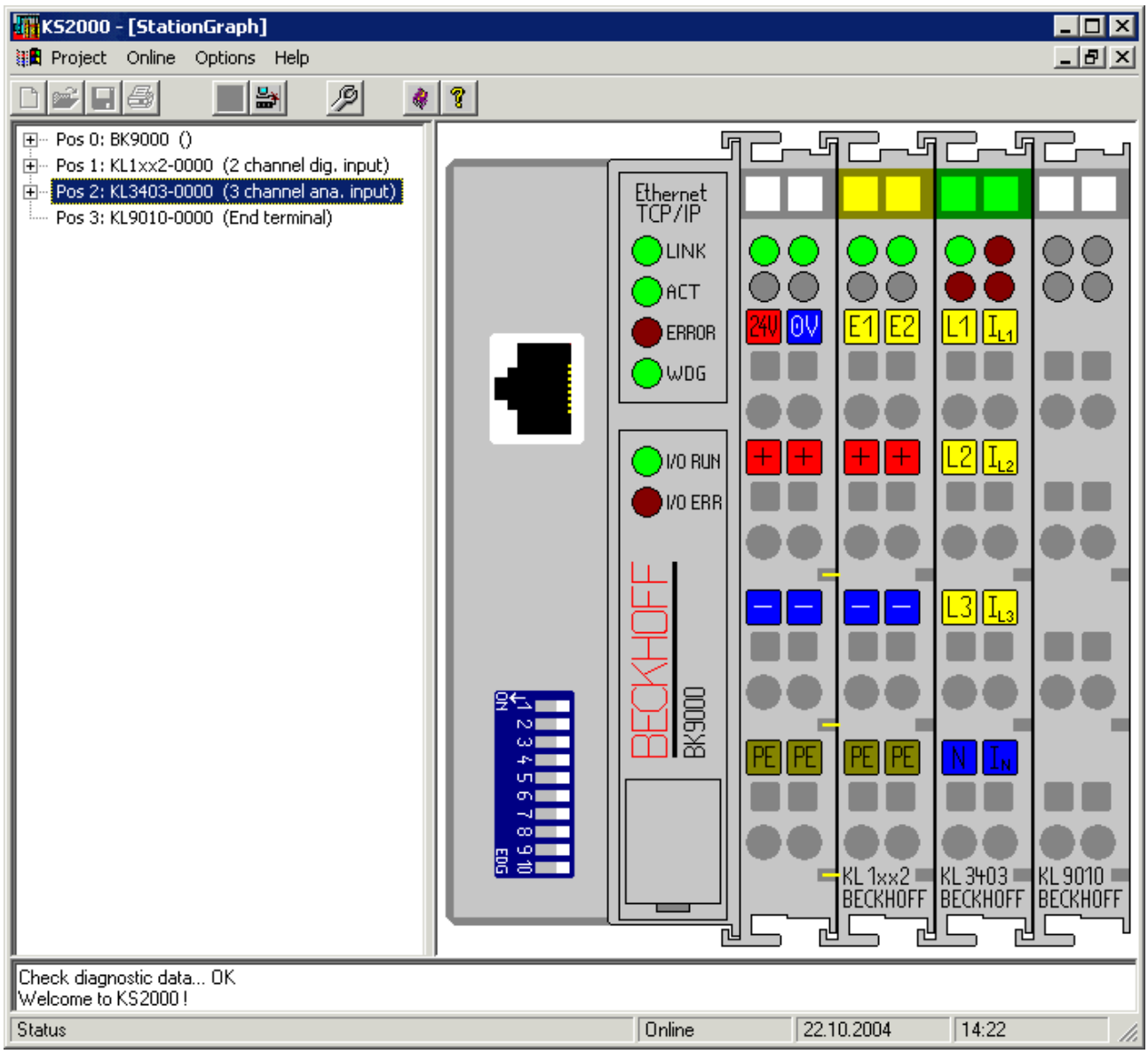

Fig. 23: Display of the fieldbus station in KS2000

The left-hand KS2000 window displays the terminals of the fieldbus station in a tree structure.
The right-hand KS2000 window contains a graphic display of the fieldbus station terminals.

In the tree structure of the left-hand window, click on the plus-sign next to the terminal whose parameters you wish to change (item 2 in the example).

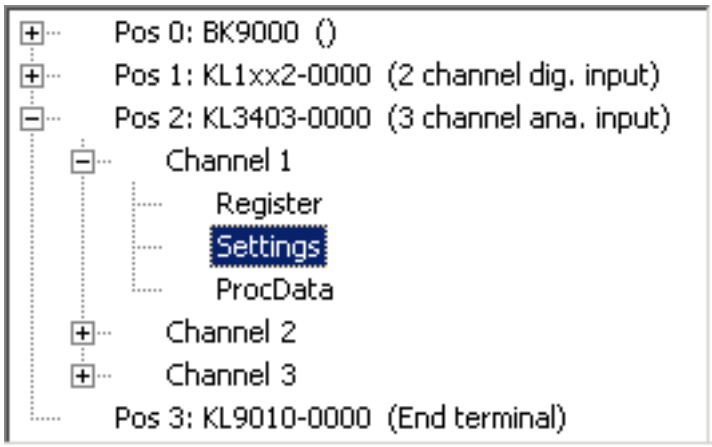

Fig. 24: KS2000 branch for channel 1 of the KL3403

For each of the three channels, the branches *Register*, *Settings* and *ProcData* are displayed:

- Register enables direct access to the channel registers.
- The dialog mask for the parameterization of the KL3403 can be found under Settings [▶ 41].
- ProcData shows the process data of the KL3403.

4.3 Settings

The dialog mask for the parameterization of the KL3403 can be found under *Settings*.

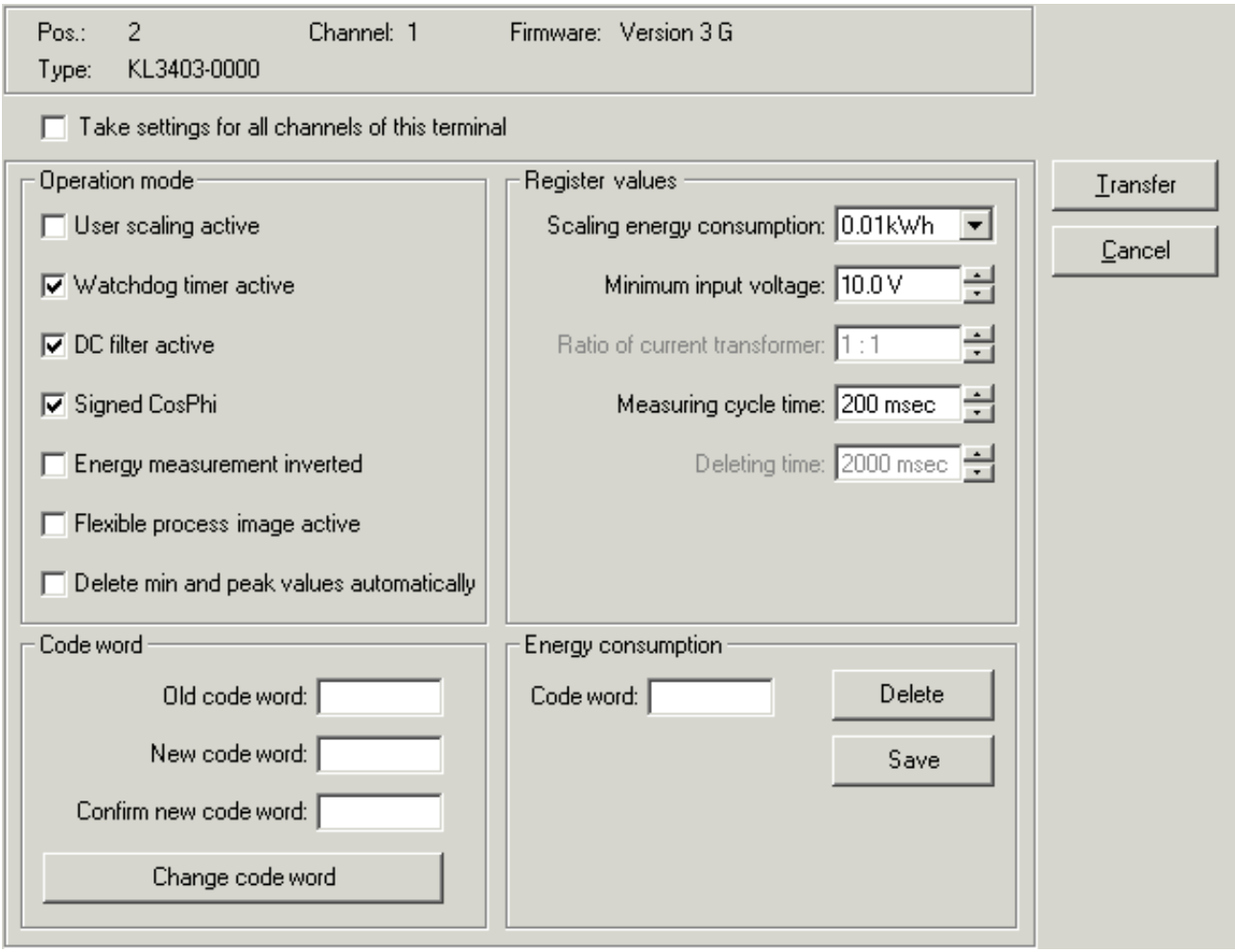

Fig. 25: Settings via KS2000

Header

Pos.: Position of the terminal in the Bus Terminal block.

Type: Terminal type

Firmware: Firmware version [▶ 9] installed on the terminal.

Operation mode

User scaling active (R32.0 [▶ 54])

You can activate user scaling here (default: deactivated).

Watchdog timer active (R32 [▶ 54].2)

You can deactivate the watchdog timer here (the default is activated).

DC filter active (R32.4 [▶ 54])

Here you can disable the DC filter (default: enabled).

CosPhi, signed (R32.5 [▶ 54])

Here you can disable the signed representation for CosPhi (default: enabled).

Energy measurement inverted (R32.6 [▶ 54])

Here you can enable sign inversion for the energy measurement (default: disabled).

Flexible process image active (R32.3 [▶ 54])

Here you can enable/disable the flexible process image [▶ 50] (default:

- disabled for KL3403-0000, KL3403-0010, KL3403-0025, KL3403-0026, KL3403-0333,
- enabled for KL3403-0020, KL3403-0022)

Automatically clear minimum and maximum values (R32.7 [▶ 54])

Here you can enable automatic deletion of the minimum and maximum current, voltage and power values (default: disabled).

Register values

Energy consumption scaling (R35 [▶ 54])

Here you can change the scaling of the energy consumption measurement. Default: 4_{dec}
(KL3403-0000 /-002x /-0333: 0,01 kWh, KL3403-0010: 0,05 kWh).

Minimum input voltage - undervoltage threshold (R36 [▶ 54])

Here you can change the undervoltage threshold (resolution: 0.1 V).
If the mains voltage falls below the specified undervoltage threshold (default: 10 V), the red error LED is triggered, and the error bit (SB1.6 [▶ 48]) is set in status byte 0.

Current transformer ratio (R37 [▶ 54])

The KL3403 can take the transformer ratio of a connected current transformer into account for the measured value output.
Here you can select the transformer ratio of a connected current transformer and enable this scaling with the option field *User scaling* (R32.0 [▶ 54]).

Note the permissible range of the measured value output

The KL3403 should only take the transformer ratio into account if the calculated resulting current does not exceed the value 65535!
If the calculated result does exceed 65535, the transformer ratio should be taken into account in the PLC.

Measuring cycle time (R39 [▶ 55])

Here you can change the measuring cycle time (resolution: 1 ms) (default: 200 ms).

deletion time (R38 [▶ 55])

Here you can change the time constant (resolution: 10 ms) for automatic deletion of the minimum and maximum current, voltage and power values (default: 2000 ms).

Password

Here you change can the password for the KL3403 (default: 4661_{dec}), in order to prevent unauthorized deletion of the energy consumption:

- Enter the old password in the field at the top.
- Enter the new password in the field in the center.
- Repeat the new password in the field at the bottom and click *Change password*

Password

In this dialog box, you have to enter the passwords in decimal form! You can also use the password change register (R5 [▶ 52]) to change the password.

Energy consumption

Here you can clear the stored energy consumption. Enter the password and click *Delete*.

Deleting the energy consumption

Once the energy consumption has been deleted, the value cannot be restored!

4.4 Sample program for KL register communication via EtherCAT on KL3314 exemplary

Using the sample programs

This document contains sample applications of our products for certain areas of application. The application notes provided here are based on typical features of our products and only serve as examples. The notes contained in this document explicitly do not refer to specific applications. The customer is therefore responsible for assessing and deciding whether the product is suitable for a particular application. We accept no responsibility for the completeness and correctness of the source code contained in this document. We reserve the right to modify the content of this document at any time and accept no responsibility for errors and missing information.

Program description / function

This example program (TwinCAT 3) provides change of single register values of the KL3314 as selection of the element type, characteristical settings of the feature register R32 and user scaling offset and gain (R33/R34) similar as per KS2000.

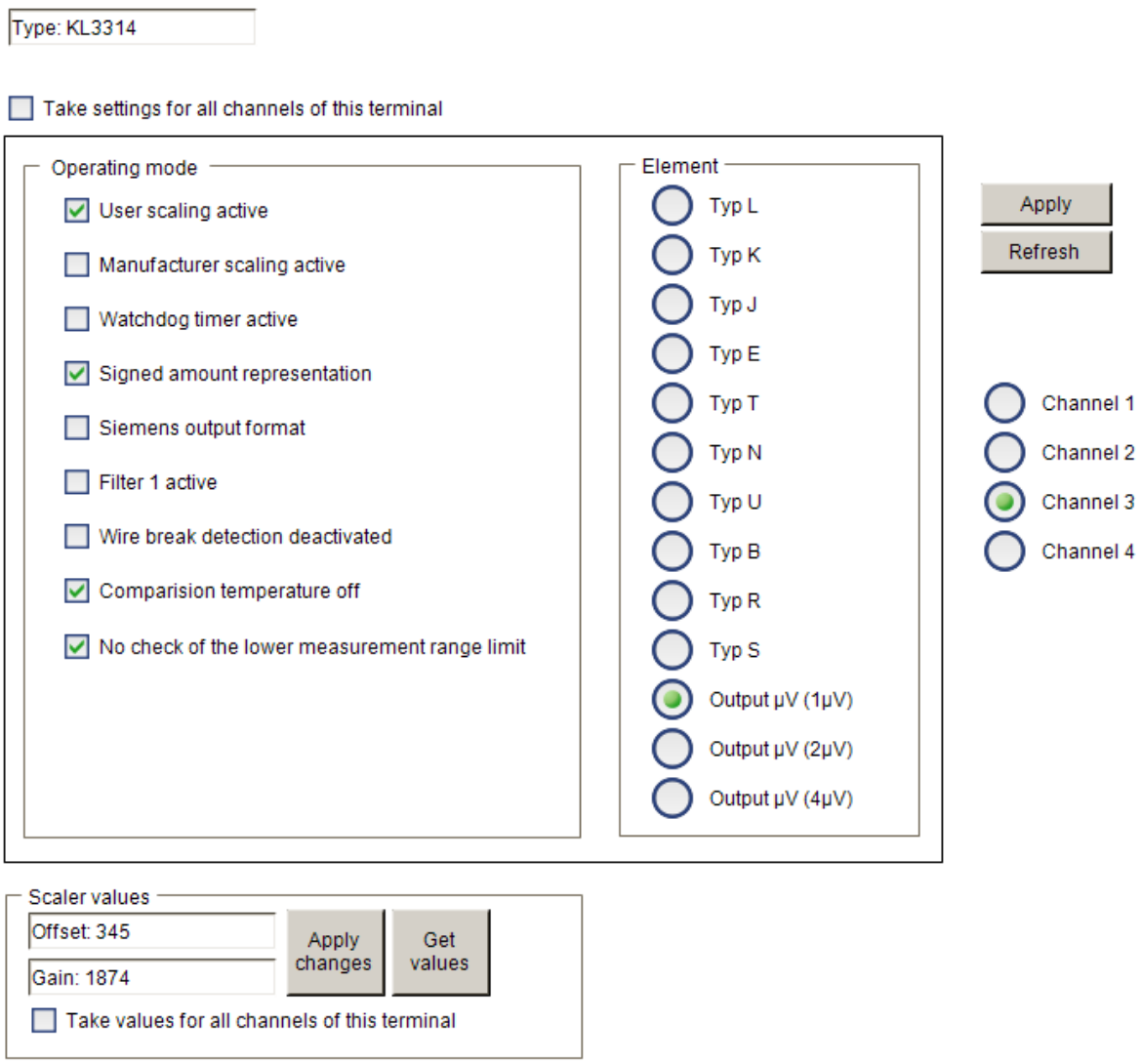

Fig. 26: Settings of KL3314 via visualisation of TwinCAT 3

At least following configuration setup shall be present:

[coupler (e.g. BK1120) or embedded PC] + KL3314 + KL9010.

Download:
https://infosys.beckhoff.com/content/1033/kl3403/Resources/zip/5996114571.zip

Preparations for starting the sample programs (tnzip file / TwinCAT 3)

- Click on the download button to save the Zip archive locally on your hard disk, then unzip the *.tnzip archive file in a temporary folder.

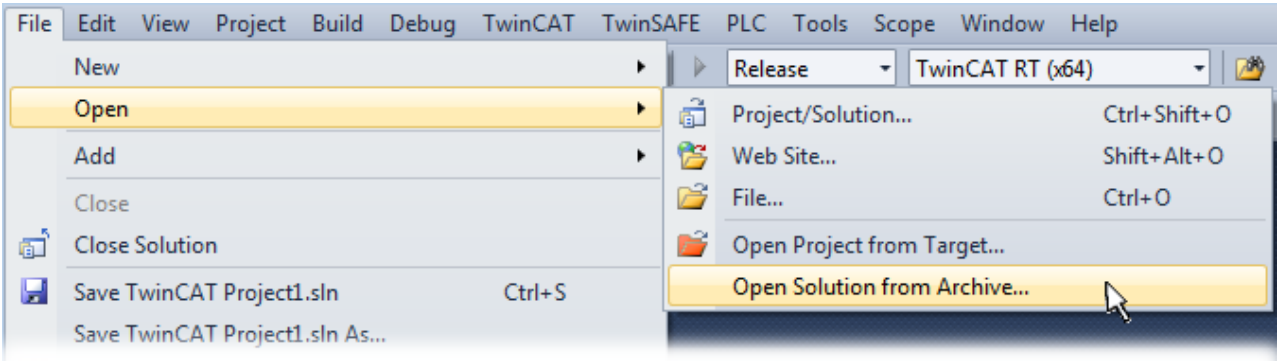

Fig. 27: Opening the *. tnzip archive

- Select the .tnzip file (sample program).
- A further selection window opens. Select the destination directory for storing the project.
- For a description of the general PLC commissioning procedure and starting the program please refer to the terminal documentation or the EtherCAT system documentation.
- The EtherCAT device of the example should usually be declared your present system. After selection of the EtherCAT device in the “Solutionexplorer” select the “Adapter” tab and click on “Search...”:

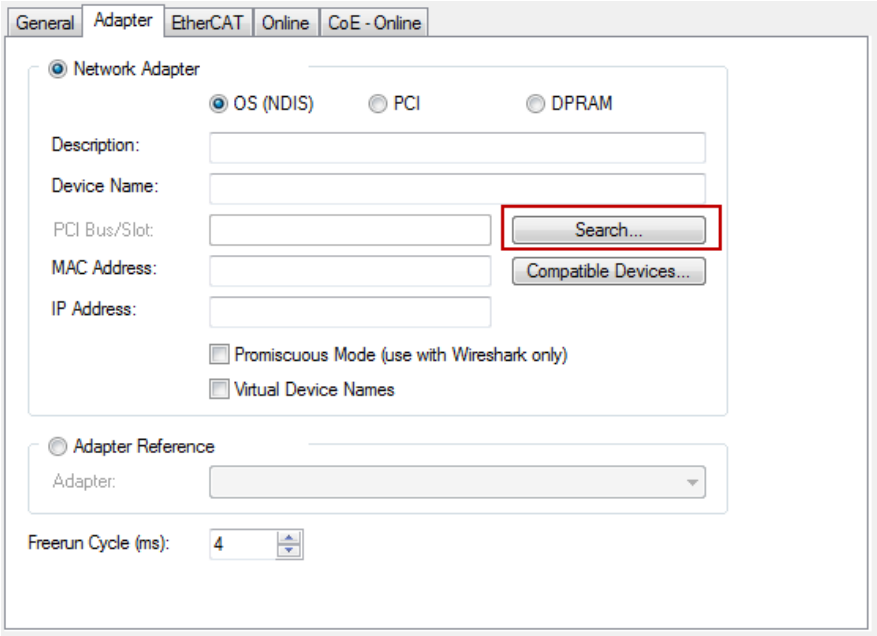

Fig. 28: Search of the existing HW configuration for the EtherCAT configuration of the example

- Checking NetId: the "EtherCAT" tab of the EtherCAT device shows the configured NetId:

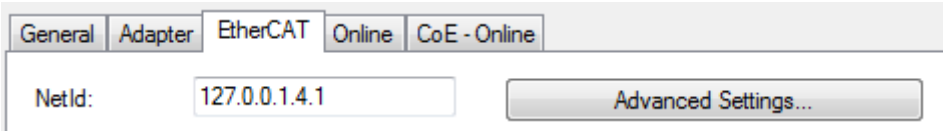

  The first 4 numbers have to be identical with the project NetId of the target system. The project NetId can be viewed within the TwinCAT environment above, where a pull down menu can be opened to choose a target system (by clicking right in the text field). The number blocks are placed in brackets there next to each computer name of a target system.
- Modify the NetId: By right clicking on "EtherCAT device" within the solution explorer a context menu opens where "Change NetId..." have to be selected. The first 4 numbers of the NetId of the target computer have to be entered; the both last values are 4.1 usually.
  Example:
  - NetId of project: myComputer (123.45.67.89.1.1)
  - Entry via „Change NetId...“: 123.45.67.89.4.1

5 Access from the user program

5.1 Process image

The KL3403 is represented in the process image with a minimum of 9 bytes of input data and 9 bytes of output data. These are organized as follows:

Byte offset (without word alignment*)	Byte offset (with word alignment*)	Format	Input data	Output data
0	0	Byte	Status byte 1 (SB1 [▶ 48])	Control byte 1 (CB1 [▶ 47])
1	2	Word	DataIN1	DataOUT1
3	4	Byte	Status byte 2 (SB2 [▶ 49])	Control byte 2 (CB2 [▶ 49])
4	6	Word	DataIN2	DataOUT2
6	8	Byte	Status byte 3 (SB3 [▶ 49])	Control byte 3 (CB3 [▶ 49])
7	10	Word	DataIN3	DataOUT3

*) Word alignment: The Bus Coupler places values on even byte addresses

No compact process image

The KL3403 cannot be operated with compact process image (without control and status bytes), since control and status bytes are required for process data operation of the KL3403 to function correctly. Even if your Bus Coupler is set to compact process image, the KL3403 is represented with its complete process image!

Output values

Terminal type	Nominal value (effective)	Output for nominal value
KL3403-0000	1.0 A	1000_{dec}
KL3403-0010	5.0 A	1000_{dec}
KL3403-0014	60 mV	25000_{dec}
KL3403-0020	20 mA	1000_{dec}
KL3403-0022	20 mA	4000_{dec}
KL3403-0025	250 mA	1000_{dec}
KL3403-0026	1.0 A	1000_{dec}
KL3403-0333	333 mV	1000_{dec}

5.2 Control and status bytes

Control and status byte of the first channel (L1)

Process data mode

Control byte 1 in process data mode

Control byte 1 (CB1) is located in the output image [▶ 46], and is transmitted from the controller to the KL3403. Note the assignment of the control bytes to the process input data words.

Bit	CB1.7	CB1.6	CB1.5	CB1.4	CB1.3	CB1.2	CB1.1	CB1.0
Name	RegAccess	R/W	ChannelIdx		ProcDatIdx			

Key

Bit	**Name**	**Description**				
CB1.7	RegAccess	0_{bin}	Register communication off (process data mode)			
CB1.6	R/W	0_{bin}	Read access			
		(1_{bin})	Since the process data registers of the KL3403 can only be read, write access is not sensible.			
CB1.5 to CB1.4	ChannelIdx[5]	Enter the channel index of the channel, from which you want to read a measured value with input data word 1 (DataIN1 [▶ 46]).				
		00_{bin}	Channel 1			
		01_{bin}	Channel 2			
		10_{bin}	Channel 3			
		11_{bin}	reserved			
CB1.3 to CB1.0	ProcDatIdx	Enter the process data index of the measured value, which you want to read with input data word 1 (DataIN1 [▶ 46]). The following process data indices are supported:				
		Index		**Symbol**	**Measured value**	**Resolution**
		0000_{bin}	0x0	I_{rms}	Current [▶ 14] (rms value)	0.001 A (KL3403-0000, KL3403-0026) 0.005 A (KL3403-0010) 20 µA (KL3403-0020) 5 µA (KL3403-0022) 250 µA (KL3403-0025) 333 µV (KL3403-0333)
		0001_{bin}	0x1	U_{rms}	Voltage [▶ 14] (rms value)	0.1 V
		0010_{bin}	0x2	P	Active power [▶ 15]	0.1 W (KL3403-0000, KL3403-0026) 0.5 W (KL3403-0010) 2 mW (KL3403-0020) flexible, max. 16,000 digit (KL3403-0022)[6] 25 mW (KL3403-0025) flexible, max. 16,000 digit (KL3403-0333)[6]
		0011_{bin}	0x3	cos φ	power factor [▶ 15] [4]	0.01
		0100_{bin}	0x4	W	Energy consumption[1]	default[3]: 0.01 kWh (KL3403-0000, KL3403-0026) default[3]: 0.05 kWh (KL3403-0010) default[3]: 0.2 Wh (KL3403-0020) flexible (KL3403-0022)[6] default[3]: 2.5 Wh (KL3403-0025) flexible (KL3403-0333)[6]
		0101_{bin}	0x5	I_{max}	Peak current value[2]	see index 0_{dec}
		0110_{bin}	0x6	U_{max}	Peak voltage value[2]	see index 1_{dec}
		0111_{bin}	0x7	P_{max}	Peak active power value[2]	see index 2_{dec}
		1000_{bin}	0x8	f	Frequency [▶ 18]	0.1 Hz (measuring interval: 5 s)
		1001_{bin}	0x9	I_{min}	Minimum current value[2]	see index 0_{dec}
		1010_{bin}	0xA	U_{min}	Minimum voltage value[2]	see index 1_{dec}
		1011_{bin}	0xB	P_{min}	Minimum active power value[2]	see index 2_{dec}
		further		reserved		

[1]) The energy consumption is counted in RAM and saved every 15 minutes in the EEPROM.
It is retained there even if the KL3403 is switched off. The command-register (R7 [▶ 52]) can be used to clear the energy value or to save it manually within 15 minutes.

[2]) The minimum and peak current value is deleted when the KL3403 is switched off.
It is recommended to clear the minimum and peak values from the user program once the terminal has started up, because it is possible that incorrect values may have been stored during the startup, i.e. before the terminal measurements have stabilized.

[3]) The resolution of the energy consumption can be scaled for each channel with its register R35 [▶ 54].

[4]) The power factor (cos φ) can be displayed with or without sign (see bit R32.5 [▶ 54] of the feature register).

[5]) The flexible process image must be enabled (R32.3 [▶ 54] = 1), in order to be able to read measured values from each channel with input data word 1 (DataIN1 [▶ 46])!
With the simple process image (R32.3 [▶ 54] = 0), input data word 1 (DataIN1) can only read the first channel (in this case, bits CB1.5, CB1.4 or SB1.5 and SB1.4 are not active).

[6]) The read values depend on the voltages and currents connected to the current transformer. They have to be converted by the application.

Service life of the EEPROM

The energy consumption is stored in an EEPROM. The EEPROM manufacturer specifies a minimum of 100000, typically 1 million possible write operations for this function block. The resulting service life of the energy consumption memory at continuous operation, assuming that the energy consumption is written to the EEPROM every 15 minutes, is:

- 2.85 years min.
- 28.5 years typical

Status byte 1 in process data mode

The status byte 1 (SB1) is located in the input image [▶ 46], and is transmitted from the KL3403 to the controller. Pay attention to the assignment of the control bytes to the process input data words in process data mode.

Bit	SB1.7	SB1.6	SB1.5	SB1.4	SB1.3	SB1.2	SB1.1	SB1.0
Name	RegAccess	ERR L1	ChannelIdx		ProcDatIdx			

Key

Bit	**Name**	**Description**	
SB1.7	RegAccess	0_{bin}	Acknowledgment for process data mode
SB1.6	ERR L1	0_{bin}	Voltage between L1 and N greater than undervoltage threshold (R36 [▶ 54]).
		1_{bin}	Voltage between L1 and N smaller than undervoltage threshold (R36 [▶ 54]). The ERR L [▶ 12]1 LED is on.
SB1.5 to SB1.4	ChannelIdx	00_{bin}	The input data word 1 (DataIN1 [▶ 46]) was used to read a measured value from channel 1.
		01_{bin}	The input data word 1 (DataIN1 [▶ 46]) was used to read a measured value from channel 2.
		10_{bin}	The input data word 1 (DataIN1 [▶ 46]) was used to read a measured value from channel 3.
		11_{bin}	reserved
SB1.3 to SB1.0	ProcDatIdx	Index of the measured value [▶ 47] that was read with input data word 1 (DataIN1 [▶ 46]).	

Register communication

Control byte 1 in register communication

Control byte 1 (CB1) is located in the output image [▶ 46], and is transmitted from the controller to the KL3403.

Bit	CB1.7	CB1.6	CB1.5	CB1.4	CB1.3	CB1.2	CB1.1	CB1.0
Name	RegAccess	R/W	Reg. no.					

Key

Bit	Name	Description	
CB1.7	RegAccess	1_{bin}	Register communication switched on
CB1.6	R/W	0_{bin}	Read access
		1_{bin}	Write access
CB1.5 to CB1.0	Reg. no.	Register number: Enter the number of the register [▶ 51] that you want to - read with input data word 1 read, or - write with output data word 1.	

⚠ CAUTION

No process data access during register communication!

It is not possible to access the data registers during register communication! Process data that may still be displayed is not valid!

Status byte 1 in register communication

The status byte 1 (SB1) is located in the input image [▶ 46], and is transmitted from the KL3403 to the controller.

Bit	SB1.7	SB1.6	SB1.5	SB1.4	SB1.3	SB1.2	SB1.1	SB1.0
Name	RegAccess	R	Reg. no.					

Key

Bit	Name	Description	
SB1.7	RegAccess	1_{bin}	Acknowledgment for register access
SB1.6	R	0_{bin}	Read access
SB1.5 to SB1.0	Reg. no.	Number of the register that was read or written.	

Control and status byte of the second channel (L2)

Control byte 2 (CB2) is in output image [▶ 46] and is transferred by the controller to the KL3403 (structure and application see Control byte 0 [▶ 47]). Pay attention to the assignment of the control bytes to the process input data words in process data mode.

Status byte 2 (SB2) is in the input image [▶ 46] and is transferred from the KL3403 to the controller (configuration and application see Status byte 0 [▶ 48]).

Control and status byte of the third channel (L3)

Control byte 3 (CB3) is in output image [▶ 46] and is transferred by the controller to the KL3403 (structure and application see Control byte 0). Pay attention to the assignment of the control bytes to the process input data words in process data mode.

Status byte 3 (SB3) is in the input image [▶ 46] and is transferred from the KL3403 to the controller (configuration and application see Status byte 0).

5.3 Reading the process data

Simple process image (compatibility mode)

Supported by all firmware versions.

In the simple process image, each process data word is assigned to a fixed channel and can only read measured values of this channel!

Channel	Control byte	Associated process data word
1	Control byte 1 [▶ 46]	DataIN1 [▶ 46]
2	Control byte 2 [▶ 46]	DataIN2 [▶ 46]
3	Control byte 3 [▶ 46]	DataIN3 [▶ 46]

If a process data index is entered into a control byte in process data mode, the process record is returned in the associated process data word.
The process data indices are listed in chapter Control and status bytes [▶ 47].

Examples for the simple process image

Reading the voltage (RMS value) of phases L1, L2 and L3

- Enter process data index [▶ 47] 0x1 in control byte 1.
  The voltage (rms value) of phase L1 is returned in process data word DataIN1.
- Enter process data index 0x1 in control byte 2.
  The voltage (rms value) of phase L2 is returned in process data word DataIN2.
- Enter process data index 0x1 in control byte 3.
  The voltage (rms value) of phase L3 is returned in process data word DataIN3.

Reading the voltage (RMS value) of phase L1, reading the active power of phase L2, and reading the power factor of phase L3

- Enter process data index 0x1 in control byte 1.
  The voltage (rms value) of phase L1 is returned in process data word DataIN1.
- Enter process data index 0x2 in control byte 2.
  The effective power of phase L2 is returned in process data word DataIN2.
- Enter process data index 0x3 in control byte 3.
  The power factor of phase L3 is returned in process data word DataIN3.

Flexible process image

Supported from firmware version [▶ 9] 3G by the KL3403-0000, KL3403-0010, KL3403-0025 and KL3403-0026.
Supported from firmware version 4F by the KL3403-0020 and KL3403-0022.
Supported from firmware version 4K by the KL3403-0333.

With the flexible process image, a process data word can read measured values from any channel.
The flexible process image is enabled/disabled with KS2000 [▶ 42] or bit R32.3 [▶ 54] of the feature register.

Examples for the flexible process image

Reading current (RMS value), voltage (RMS value) and active power of phase L2

- Enter 0x10 in control byte 1 (channel index [▶ 47] 01_{bin}, process data index [▶ 47] 0000_{bin}).
  The current (RMS value) of phase L2 is returned in process data word DataIN1.
- Enter 0x11 in control byte 2 (channel index 01_{bin}, process data index 0001_{bin}).
  The voltage (rms value) of phase L2 is returned in process data word DataIN2.

- Enter 0x12 in control byte 3 (channel index 01_{bin}, process data index 0010_{bin}).
  The effective power of phase L2 is returned in process data word DataIN3.

Reading current (RMS value), voltage (RMS value) of phase L1 and voltage of phase L2

- Enter 0x00 in control byte 1 (channel index 00_{bin}, process data index 0000_{bin}).
  The current (RMS value) of phase L1 is returned in process data word DataIN1.
- Enter 0x01 in control byte 2 (channel index 00_{bin}, process data index 0001_{bin}).
  The voltage (rms value) of phase L1 is returned in process data word DataIN2.
- Enter 0x11 in control byte 3 (channel index 01_{bin}, process data index 0001_{bin}).
  The voltage (rms value) of phase L2 is returned in process data word DataIN3.

5.4 Register overview

These registers are used for the parameterization of the power measurement terminal and exist for each channel. They can be read or written by means of register communication.

Register no.	Comment		Default value		R/W	Memory
R0 [▶ 52]	Overflow register for energy consumption		0x0000	0_{dec}	R/W	Flash
R1	reserved		-	-	-	-
...	...		...	...	...	...
R4	reserved		-	-	-	-
R5 [▶ 52]	Password change register		-	-	-	-
R6	Diagnostic register		-	-	R	RAM
R7 [▶ 52]	Command register		-	-	-	-
R8 [▶ 53]	Terminal type		0x0D4B	3403_{dec}	R	ROM
R9 [▶ 53]	Firmware version		e.g. 0x3143	12611_{dec}	R	ROM
R10	Multiplex shift register		0x0230 / 0x0318	560_{dec} / 792_{dec}	R	ROM
R11	Signal channels		0x0318	792_{dec}	R	ROM
R12	Minimum data length		0x1818	6168_{dec}	R	ROM
R13	Data structure		0x0007	7_{dec}	R	ROM
R14	reserved		-	-	-	-
R15	Alignment register		-	-	R/W	RAM
R16	Hardware version		e.g. 0x0000	e.g. 0_{dec}	R/W	Flash
R17 [▶ 53]	Voltage gain compensation		e.g. 0x0400	e.g. 1024_{dec}	R/W	Flash
R18 [▶ 53]	Current gain compensation		e.g. 0x0400	e.g. 1024_{dec}	R/W	Flash
R19	reserved		-	-	-	-
...	...		...	...	...	...
R29	Terminal type, special identification		e.g. 0x000	e.g. 0_{dec}		
R30	reserved		-	-	-	-
R31 [▶ 53]	Code word register		0x0000	0_{dec}	R/W	RAM
R32 [▶ 54]	Feature register	KL3403-0000, KL3403-0010, KL3403-0025, KL3403-0026, KL3403-0333	0x0020	32_{dec}	R/W	Flash
		KL3403-0014, KL3403-0020, KL3403-0022	0x0030	48_{dec}		
R33	reserved		-	-	-	-
R34	reserved		-	-	-	-
R35 [▶ 54]	Scaling factor for the energy measurement		0x0004	4_{dec}	R/W	Flash
R36 [▶ 54]	Undervoltage threshold value		0x0064	100_{dec}	R/W	Flash
R37 [▶ 54]	Divisor of the current transformer ratio		0x0001	1_{dec}	R/W	Flash
R38 [▶ 55]	Time constant for automatic deletion of the minimum and maximum values		0x00C8	200_{dec}	R/W	Flash
R39 [▶ 55]	Measuring cycle time		0x0032	50_{dec}	R/W	Flash
R40	reserved		-	-	-	-
...	...		...	...	...	...
R63	reserved		-	-	-	-

5.5 Register description

These registers are used for the parameterization of the power measurement terminal and exist for each channel. They can be read or written by means of register communication.

R0: Overflow register for energy consumption

If the register for the energy consumption (read via process data index [▶ 47] 0x4) overflows, this overflow register is incremented. 32 bits are thus available for storing the energy consumption. The overflow register for the energy consumption must be read via the register communication.

R5: Password change register

You can change the password for the KL3403 (default: 1235_{hex}), in order to prevent unauthorized deletion of the energy consumption.

The password can be changed as follows:

1. Enter the old password (default: 1235_{hex}) in the password-register (R31).
2. Enter the new password in the password change register (R5).
3. Repeat the new password in the command register (R7).

The new password is now active without resetting the terminal!

R7: Command register

Command 0x1004: Deleting the energy consumption (user password must be set)

Write the value 0x1004 into the command register, in order to delete the energy consumption stored in the process data (process data index [▶ 47] 0x4) and the overflow register for the energy consumption (R0 [▶ 52]).

Command 0x1005: delete maximum current

Write the value 0x1005 into the command register, in order to clear the maximum current stored in the process data (process data index [▶ 47] 0x5).

Command 0x1006: clear maximum voltage

Write the value 0x1006 into the command register, in order to clear the maximum voltage stored in the process data (process data index [▶ 47] 0x6).

Command 0x1007: clear maximum active power

Write the value 0x1007 into the command register, in order to clear the maximum active power stored in the process data (process data index [▶ 47] 0x7).

Command 0x1009: clear minimum current

Write the value 0x1009 into the command register, in order to clear the minimum current stored in the process data (process data index [▶ 47] 0x9).

Command 0x100A: clear minimum voltage

Write the value 0x100A into the command register, in order to clear the minimum voltage stored in the process data (process data index [▶ 47] 0xA).

Command 0x100B: clear minimum active power

Write the value 0x100B into the command register, in order to clear the minimum active power stored in the process data (process data index [▶ 47] 0xB).

Command 0x1014: store energy consumption early

The KL3403 logs the energy consumption in the RAM and cyclically saves the values in the EEPROM every 15 minutes. If you want to switch off the KL3403 without losing the energy consumption measured since the last cyclic save operation, you can use this command to manually save the current value in the EEPROM.

Command 0x1020: clear all minimum and maximum values

Write the value 0x1020 into the command register, in order to clear all minimum and maximum values.

Command 0x7000: Restore Factory Settings

Entering 0x7000 in register R7 restores the delivery state for the following registers:

R32 [▶ 54]:

- 0x0020 for KL3403-0000, KL3403-0010, KL3403-0025, KL3403-0026, KL3403-0333 or
- 0x0030 for KL3403-0014, KL3403-0020, KL3403-0022

R35 [▶ 54]: 4
R36 [▶ 54]: 100_{dec}
R37 [▶ 54]: 1
R38 [▶ 55]: 200_{dec}
R39 [▶ 55]: 50_{dec}

Repeating the new password

Repeat the new password in the command register when you change the password (see password change register description R5 [▶ 52]).

R8: Terminal description

Register R8 contains the terminal identifier in hexadecimal coding. KL3403: 0x0D4B (3403_{dec})

R9: Firmware version

Register R9 contains the firmware revision level of the terminal in hexadecimal coding, e. g. 0x3144 (12611_{dec}).

R17: Voltage gain compensation

These registers contain the compensation values determined at production, and cannot be changed.

R18: Current gain compensation

These registers contain the compensation values determined at production, and cannot be changed.

R31: Code word register

- If you write values into the user registers without previously having entered the user code word (0x1235) in the code word register, these values are only stored in the RAM registers, but not in the EEPROM registers and are therefore lost if the terminal is restarted.
- If you write values into the user registers and have previously entered the user code word (0x1235) in the code word register, these values are stored in the RAM registers and in the SEEPROM registers and are therefore retained if the terminal is restarted.

The code word is reset if the terminal is restarted.

R32: Feature register

The feature register specifies the terminal's operation mode.

Bit	Feature	Value	Explanation	Default
R32.15 to R32.8	-	-	reserved	0_{bin}
R32.7	enClrMinMaxValues	1_{bin}	Automatic deletion of the minimum and maximum current, voltage and power values enabled (process data index [▶ 47] 0x5, 0x6, 0x7, 0x9, 0xA and 0xB)	0_{bin}
R32.6	invEnergySign	1_{bin}	The energy consumption measurement inverted (generator mode)	0_{bin}
R32.5	signCosPhi	0_{bin}	CosPhi (cos φ) is always shown positive	1_{bin}
		1_{bin}	CosPhi (cos φ) is shown signed: - inductive load: cos φ has positive sign - capacitive load: cos φ has negative sign	
R32.4	skipDcFilter	0_{bin}	DC filter active	0_{bin}
		1_{bin}	DC filter is bypassed	
R32.3	enFlexProcImage	0_{bin}	Simple process image [▶ 50] (compatibility mode)	$0_{bin}/1_{bin}$*
		1_{bin}	Flexible process image [▶ 50]	
R32.2	disWdTimer	0_{bin}	Watchdog timer active: The watchdog is triggered, if no process data were received for 100 ms	0_{bin}
		1_{bin}	Watchdog timer not active	
R32.1	-	-	reserved	0_{bin}
R32.0	enUserScaling	0_{bin}	User scaling is switched off (ratio is 1:1)	0_{bin}
		1_{bin}	User scaling is switched on (ratio is 1/R37)	

*) 0_{bin} (KL3403-0000, KL3403-0010, KL3403-0025, KL3403-0026, KL3403-0333)
1_{bin} (KL3403-0020, KL3403-0022)

R35: Scaling factor for the energy measurement

This register can be used for scaling the energy measurement. Default: 4_{dec} (KL3403-0000 / -002x/ -0333: 0.01 kWh, KL3403-0010: 0.05 kWh). To change the scaling factor, you first have to set the user code word in register R31 [▶ 53]!

Entry		0_{dec}	1_{dec}	2_{dec}	3_{dec}	4_{dec}	5_{dec}	6_{dec}	...
Scaling factor	**KL3403-0000, KL3403-002x, KL3403-0333**	1 mWh	0.01 Wh	0.1 Wh	1 Wh	0.01 kWh	0.1 kWh	1 kWh	reserved
	KL3403-0010	5 mWh	0.05 Wh	0.5 Wh	5 Wh	0.05 kWh	0.5 kWh	5 kWh	reserved

R36: Undervoltage threshold

If the mains voltage is below the undervoltage threshold the stored in register R36 (resolution: 0.1 V, default: 100_{dec}=10 V), the error bit (SB1.6 [▶ 48]) is set in status byte 0, and the red error LED is triggered.

R37: Divisor of the current transformer ratio

The KL3403 can take the transformer ratio of a connected current transformer into account for the measured value output. Enter the divisor for the transformation ratio of a connected current transformer here, and enable this scaling with bit R32.0 [▶ 54] of the feature register.

Note the permissible range of the measured value output

The KL3403 should only take the transformer ratio into account if the calculated resulting current does not exceed the value 65535!
If the calculated result does exceed 65535, the transformer ratio should be taken into account in the PLC.

R38: Time constant for automatic deletion of the minimum and maximum values

If bit R32.7 [▶ 54] is enabled, the minimum and maximum current, voltage and power values of the respective phase are cleared after the set time.

- Default value: 2000 ms (R38 = 200)
- Resolution: 10 ms
- Range of values: 10 ms to 655350 ms

R39: Measuring cycle time

With this register, the measuring cycle time of the A/D converter is set:

- Default value: 50 ms
- Resolution: 1 ms
- Range of values: 1 ms to 65535 ms

The correct setting of the measuring interval depends on the mains frequency, among other factors (see chapter Basic function principles [▶ 14]).

5.6 Examples of Register Communication

The numbering of the bytes in the examples corresponds to the display without word alignment.

5.6.1 Example 1: reading the firmware version from Register 9

Output Data

Byte 0: Control byte	Byte 1: DataOUT1, high byte	Byte 2: DataOUT1, low byte
0x89 (1000 1001_{bin})	0xXX	0xXX

Explanation:

- Bit 0.7 set means: Register communication switched on.
- Bit 0.6 not set means: reading the register.
- Bits 0.5 to 0.0 specify the register number 9 with 00 1001_{bin}.
- The output data word (byte 1 and byte 2) has no meaning during read access. To change a register, write the required value into the output word.

Input Data (answer of the bus terminal)

Byte 0: Status byte	Byte 1: DataIN1, high byte	Byte 2: DataIN1, low byte
0x89	0x33	0x41

Explanation:

- The terminal returns the value of the control byte as a receipt in the status byte.
- The terminal returns the firmware version 0x3341 in the input data word (byte 1 and byte 2). This is to be interpreted as an ASCII code:
  - ASCII code 0x33 represents the digit 3

- ASCII code 0x41 represents the letter A
  The firmware version is thus 3A.

5.6.2 Example 2: Writing to an user register

Code word

In normal mode all user registers are read-only with the exception of Register 31. In order to deactivate this write protection you must write the code word (0x1235) into Register 31. If a value other than 0x1235 is written into Register 31, write protection is reactivated. Please note that changes to a register only become effective after restarting the terminal (power-off/power-on).

I. Write the code word (0x1235) into Register 31.

Output Data

Byte 0: Control byte	Byte 1: DataOUT1, high byte	Byte 2: DataOUT1, low byte
0xDF (1101 1111_{bin})	0x12	0x35

Explanation:

- Bit 0.7 set means: Register communication switched on.
- Bit 0.6 set means: writing to the register.
- Bits 0.5 to 0.0 specify the register number 31 with 01 1111_{bin}.
- The output data word (byte 1 and byte 2) contains the code word (0x1235) for deactivating write protection.

Input Data (answer of the bus terminal)

Byte 0: Status byte	Byte 1: DataIN1, high byte	Byte 2: DataIN1, low byte
0x9F (1001 1111_{bin})	0xXX	0xXX

Explanation:

- The terminal returns a value as a receipt in the status byte that differs only in bit 0.6 from the value of the control byte.
- The input data word (byte 1 and byte 2) is of no importance after the write access. Any values still displayed are invalid!

II. Read Register 31 (check the set code word)

Output Data

Byte 0: Control byte	Byte 1: DataOUT1, high byte	Byte 2: DataOUT1, low byte
0x9F (1001 1111_{bin})	0xXX	0xXX

Explanation:

- Bit 0.7 set means: Register communication switched on.
- Bit 0.6 not set means: reading the register.
- Bits 0.5 to 0.0 specify the register number 31 with 01 1111_{bin}.
- The output data word (byte 1 and byte 2) has no meaning during read access.

Input Data (answer of the bus terminal)

Byte 0: Status byte	Byte 1: DataIN1, high byte	Byte 2: DataIN1, low byte
0x9F (1001 1111_{bin})	0x12	0x35

Explanation:

- The terminal returns the value of the control byte as a receipt in the status byte.
- The terminal returns the current value of the code word register in the input data word (byte 1 and byte 2).

III. Write to Register 32 (change contents of the feature register)

Output data

Byte 0: Control byte	Byte 1: DataIN1, high byte	Byte 2: DataIN1, low byte
0xE0 (1110 0000_{bin})	0x00	0x02

Explanation:

- Bit 0.7 set means: Register communication switched on.
- Bit 0.6 set means: writing to the register.
- Bits 0.5 to 0.0 indicate register number 32 with 10 0000_{bin}.
- The output data word (byte 1 and byte 2) contains the new value for the feature register.

⚠ CAUTION

Observe the register description!

The value of 0x0002 given here is just an example!
The bits of the feature register change the properties of the terminal and have a different meaning, depending on the type of terminal. Refer to the description of the feature register of your terminal (chapter *Register description*) regarding the meaning of the individual bits before changing the values.

Input data (response from the Bus Terminal)

Byte 0: Status byte	Byte 1: DataIN1, high byte	Byte 2: DataIN1, low byte
0xA0 (1010 0000_{bin})	0xXX	0xXX

Explanation:

- The terminal returns a value as a receipt in the status byte that differs only in bit 0.6 from the value of the control byte.
- The input data word (byte 1 and byte 2) is of no importance after the write access. Any values still displayed are invalid!

IV. Read Register 32 (check changed feature register)

Output Data

Byte 0: Control byte	Byte 1: DataOUT1, high byte	Byte 2: DataOUT1, low byte
0xA0 (1010 0000_{bin})	0xXX	0xXX

Explanation:

- Bit 0.7 set means: Register communication switched on.
- Bit 0.6 not set means: reading the register.
- Bits 0.5 to 0.0 indicate register number 32 with 10 0000_{bin}.
- The output data word (byte 1 and byte 2) has no meaning during read access.

Input Data (answer of the bus terminal)

Byte 0: Status byte	Byte 1: DataIN1, high byte	Byte 2: DataIN1, low byte
0xA0 (1010 0000_{bin})	0x00	0x02

Explanation:

- The terminal returns the value of the control byte as a receipt in the status byte.
- The terminal returns the current value of the feature register in the input data word (byte 1 and byte 2).

V. Write Register 31 (reset code word)

Output Data

Byte 0: Control byte	Byte 1: DataOUT1, high byte	Byte 2: DataOUT1, low byte
0xDF (1101 1111_{bin})	0x00	0x00

Explanation:

- Bit 0.7 set means: Register communication switched on.
- Bit 0.6 set means: writing to the register.
- Bits 0.5 to 0.0 specify the register number 31 with 01 1111_{bin}.
- The output data word (byte 1 and byte 2) contains 0x0000 for reactivating write protection.

Input Data (answer of the bus terminal)

Byte 0: Status byte	Byte 1: DataIN1, high byte	Byte 2: DataIN1, low byte
0x9F (1001 1111_{bin})	0xXX	0xXX

Explanation:

- The terminal returns a value as a receipt in the status byte that differs only in bit 0.6 from the value of the control byte.
- The input data word (byte 1 and byte 2) is of no importance after the write access. Any values still displayed are invalid!

6 Appendix

6.1 Error correction

The following table shows typical errors and how to fix them.

Error	Cause	Remedy
The KL3403 indicates negative power consumption, despite the fact that a consumer is connected.	• The connection of one or several current circuits is reversed. • Current and voltage circuits are not connected correspondingly. Example: Phase L1 is connected to the voltage circuit for L1 (terminal point 1 [▶ 29]), but the current transformer connected to phase L1 is connected to I_{L2} (terminal point 6 [▶ 29]).	Check the wiring!
An upstream residual current circuit breaker trips.	A phase is connected to the neutral conductor.	Check the wiring!
They want to measure DC, but the KL3403 does not show any meaningful values.	The DC filter of the KL3403 are switched on (delivery state).	Switch off the DC filters for the KL3403 (using the configuration software KS2000 [▶ 41] or the register communication (register R32.4 [▶ 54])) for measuring direct voltage and DC.
Measuring inaccuracies occur with large currents.	Overload at the current inputs of the terminal (see chapter Measuring error due to input overload [▶ 60]).	• Use a terminal type with higher rated current (e.g. KL3403-0010 [▶ 19]) • Use current transformers with a higher ratio.
Measuring inaccuracies occur when measuring low DC voltages.	In the range 10 to 20 V, the voltage inputs of the KL3403 exhibit a small non-linearity (see chapter Measuring error with DC voltage measurement [▶ 63]).	

6.2 Measuring error due to input overload

The various variants of the KL3403 differ only in terms of input configuration. The output value for the nominal value (full scale) is the same for most variants (see process data [▶ 46]).

Terminal type	KL3403-...							
	0000	0010	0014*	0020	0022**	0025	0026	0333
Nominal value	1 A	5 A	60 mV	20 mA	20 mA	250 mA	1 A	333 mV
Output for RMS value at nominal value	1000_{dec}	1000_{dec}	25000_{dec}	1000_{dec}	4000_{dec}	1000_{dec}	1000_{dec}	1000_{dec}

*) for KL3403-0014: three additional voltage circuits instead of the current circuits: 60 mV for connection of external shunts

**) for KL3403-0022: three additional current circuits instead of the voltage circuits: also 20 mA

Current and sampling curve for input signals within the permitted measuring range

If the current input values are within the permitted range, i.e. not above the rated current for the terminal, a valid measured value (≤ 1414_{dec}) is read for each interpolation point.

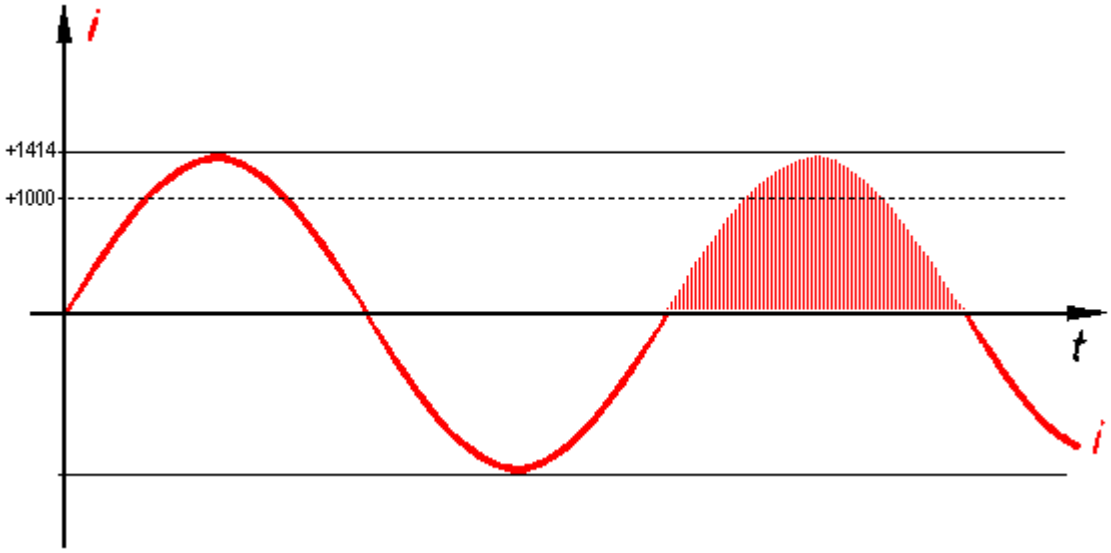

Fig. 29: Current and sampling curve for input signals within the permitted measuring range

In the example shown (full scale), the terminal outputs the value 1000_{dec} for the RMS value of the current.

Current and sampling curve for 20% overload

If the input current exceeds the rated terminal current, the terminal also outputs the value 1414_{dec} for the peak values (which are greater than the rated current times root 2). For this interpolation points a measuring error occurs due to input overload.

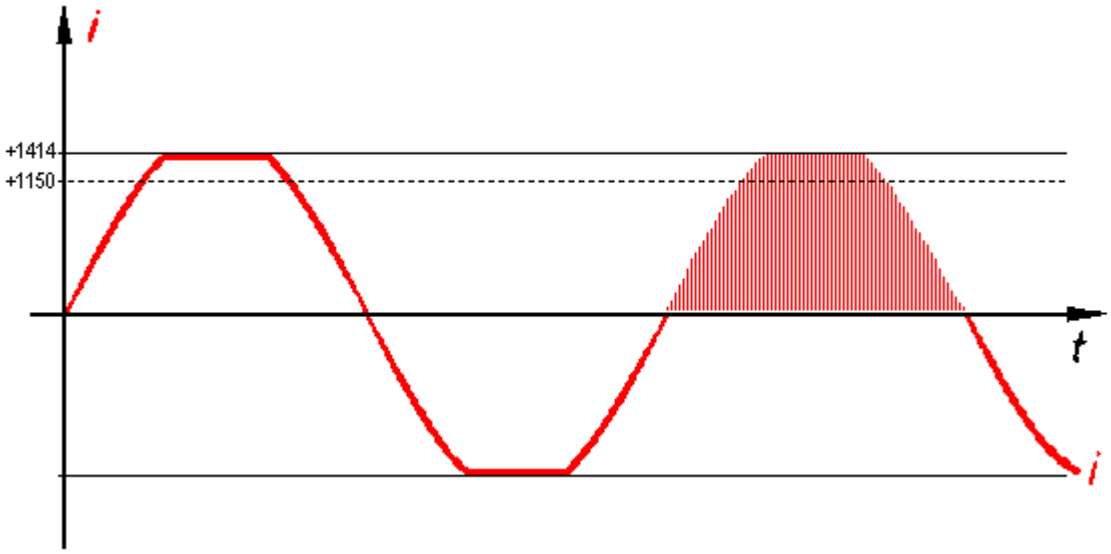

Fig. 30: Current and sampling curve for 20% overload

In the example shown, the terminal outputs a value of approx. 1150_{dec} for the RMS value of the current. This value is already subject to a small error.

Current and sampling curve for 50% overload

The higher the input overload, the more interpolation points are subject to an ever greater measuring error due to the input overload.

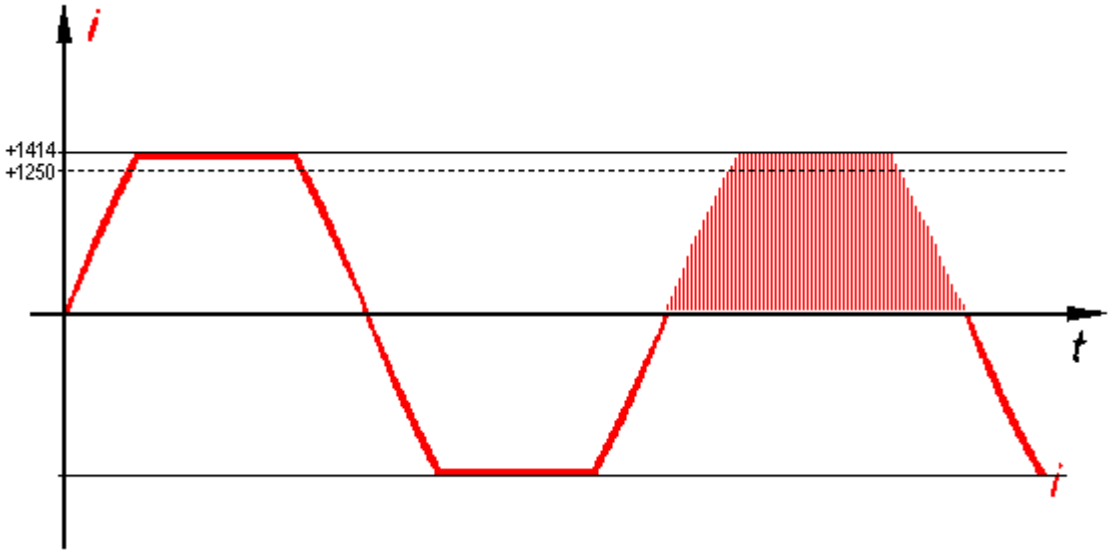

Fig. 31: Current and sampling curve for 50% overload

In the example shown, the terminal outputs a value of approx. 1250_{dec} for the RMS value of the current. This value is subject to a relevant error.

The measuring error increases with the degree of overload

With increasing overload, the RMS value "I" calculated from the interpolation points still increases with the input voltage "î", but it no longer increased linearly with the input signal, and the measuring error "Δ" increases quickly!

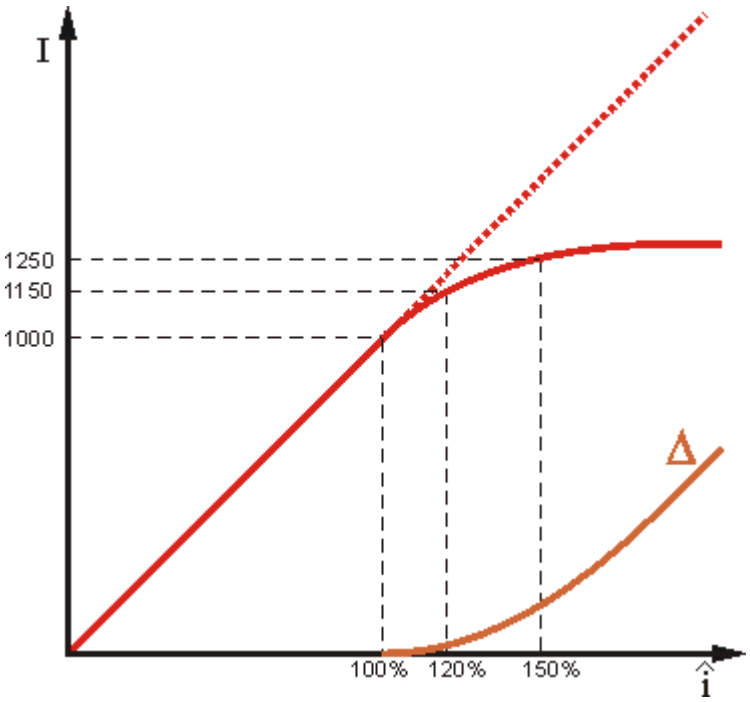

Fig. 32: Increase in measuring error "Δ" with increasing overload

The output values indicated for input overloads of 20% and 50% are typical values. They may differ to some degree, due to component tolerances between terminals.

6.3 Measuring error for DC voltage measurement

Measurements of small DC voltages may be subject to small measuring inaccuracies, since the voltage inputs are subject to a small non-linearity.

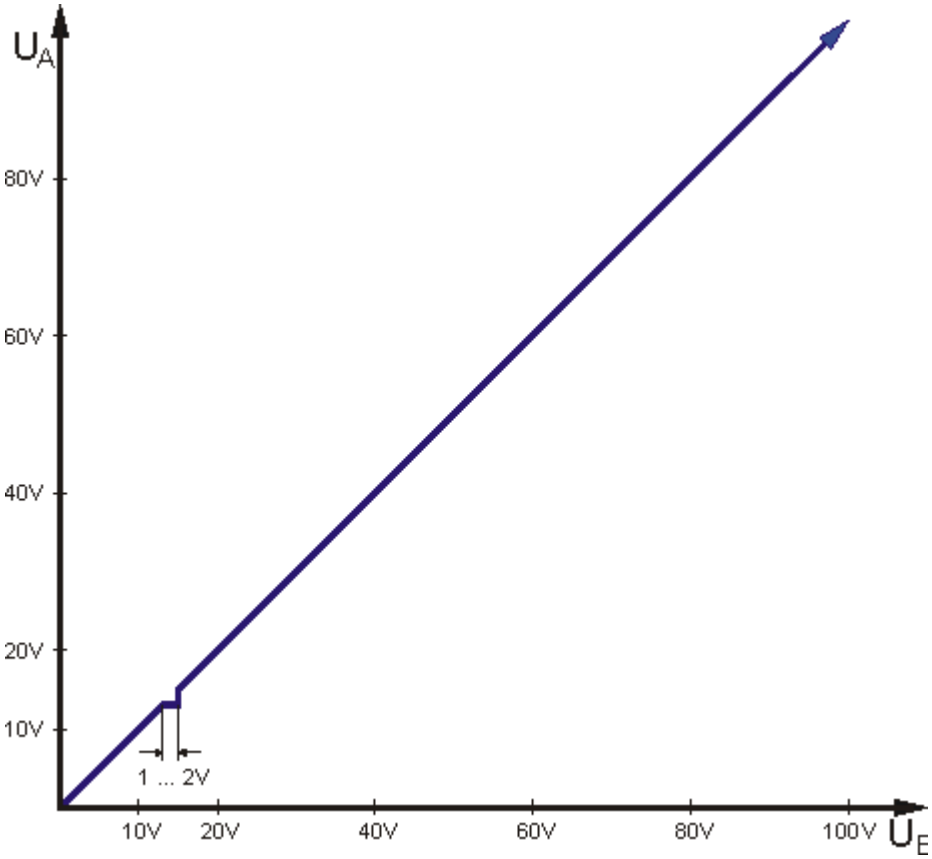

Fig. 33: Measuring error for DC voltage measurement

This stepped drop is approx. 1 to 2 V and typically occurs between 10 and 20 V.

6.4 Support and Service

Beckhoff and their partners around the world offer comprehensive support and service, making available fast and competent assistance with all questions related to Beckhoff products and system solutions.

Beckhoff's branch offices and representatives

Please contact your Beckhoff branch office or representative for local support and service on Beckhoff products!

The addresses of Beckhoff's branch offices and representatives round the world can be found on her internet pages:

http://www.beckhoff.com

You will also find further documentation for Beckhoff components there.

Castel Maggiore (BO) 40013
Via Lirone 60/i

e-mail: info@eurotecsrl.com
Tel: +39 051/6321595
Website: www.eurotecsrl.com

C.F.: 04103780377
P.I.: 01596581205