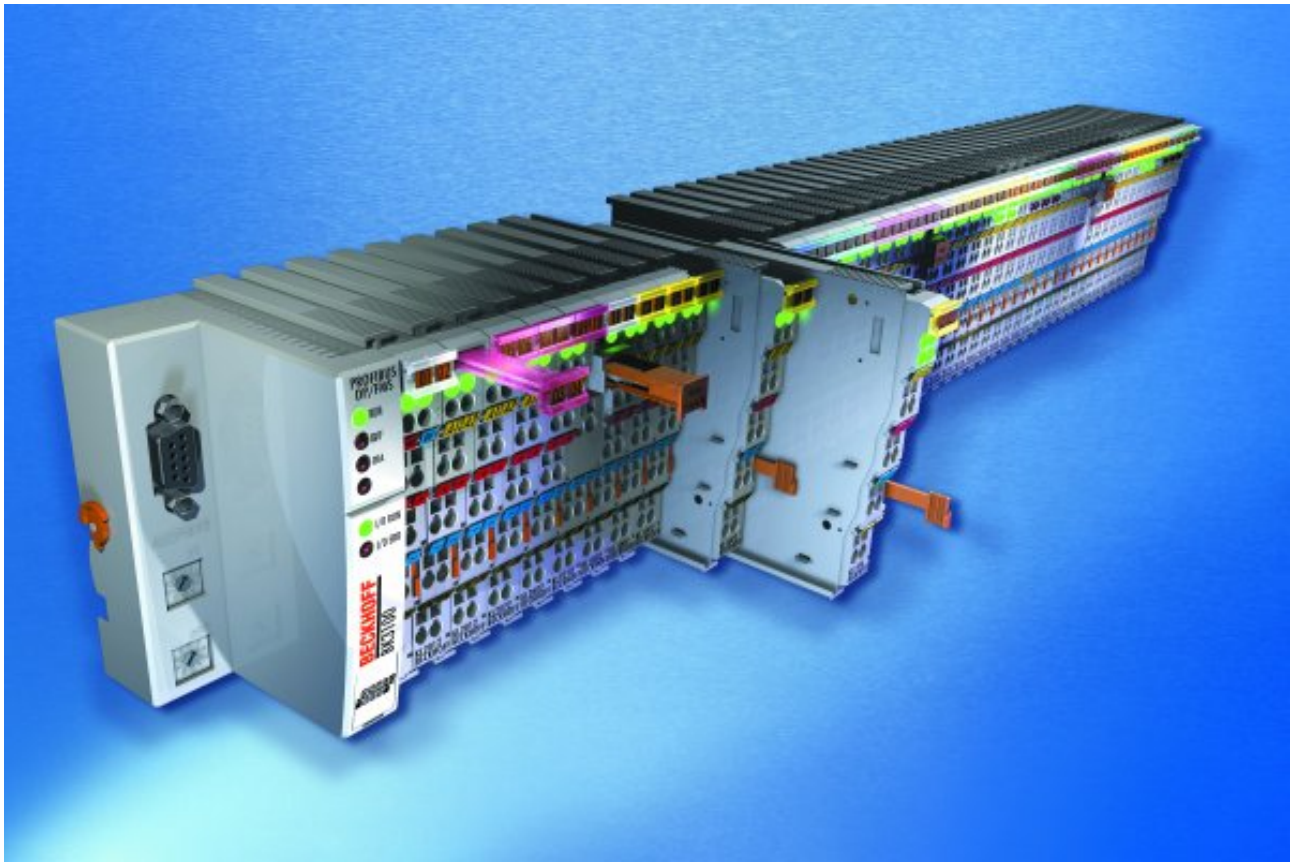

Documentation

KL306x

Single-, Dual and Four-Channel Analog Input Terminals, Measuring range: 0 V to 10 V, Single ended

EUROTEC
TECNOLOGIE IMPIANTISTICHE - AUTOMAZIONE - TELECONTROLLO

BECKHOFF

Table of contents

1 Foreword ... 5
1.1 Notes on the documentation ... 5
1.2 Safety instructions ... 6
1.3 Documentation issue status ... 7
1.4 Beckhoff Identification Code (BIC) ... 7
2 Product overview ... 10
2.1 KL306x - Introduction ... 10
2.2 KL306x - Technical data ... 11
2.3 Basic function principles ... 11
3 Mounting and wiring ... 13
3.1 Instructions for ESD protection ... 13
3.2 Installation on mounting rails ... 13
3.3 Installation instructions for enhanced mechanical load capacity ... 17
3.4 Connection ... 17
3.4.1 Connection system ... 17
3.4.2 Wiring ... 20
3.4.3 Shielding ... 21
3.5 KL3061, KL3062 - Connection and LED description ... 22
3.6 KL3064 - Connection and LED description ... 23
3.7 ATEX - Special conditions (standard temperature range) ... 24
3.8 ATEX - Special conditions (extended temperature range) ... 25
3.9 ATEX Documentation ... 26
4 Configuration Software KS2000 ... 27
4.1 KS2000 - Introduction ... 27
4.2 Sample program for KL register communication via EtherCAT on KL3314 exemplary ... 28
5 Access from the user program ... 31
5.1 KL3061, KL3062 - Terminal configuration ... 31
5.2 KL3064 – Terminal configuration ... 33
5.3 Mapping in the Bus Coupler ... 34
5.3.1 KL3061 ... 35
5.3.2 KL3062 ... 36
5.3.3 KL3064 ... 37
5.4 Register overview ... 38
5.5 Register description ... 38
5.6 Control and status byte ... 42
5.6.1 Process data exchange ... 42
5.6.2 Register communication ... 44
5.7 Examples of Register Communication ... 45
5.7.1 Example 1: reading the firmware version from Register 9 ... 45
5.7.2 Example 2: Writing to an user register ... 46
6 Appendix ... 49
6.1 Support and Service ... 49

1 Foreword

1.1 Notes on the documentation

Intended audience

This description is only intended for the use of trained specialists in control and automation engineering who are familiar with the applicable national standards.
It is essential that the documentation and the following notes and explanations are followed when installing and commissioning these components.
It is the duty of the technical personnel to use the documentation published at the respective time of each installation and commissioning.

The responsible staff must ensure that the application or use of the products described satisfy all the requirements for safety, including all the relevant laws, regulations, guidelines and standards.

Disclaimer

The documentation has been prepared with care. The products described are, however, constantly under development.

We reserve the right to revise and change the documentation at any time and without prior announcement.

No claims for the modification of products that have already been supplied may be made on the basis of the data, diagrams and descriptions in this documentation.

Trademarks

Beckhoff®, TwinCAT®, EtherCAT®, EtherCAT G®, EtherCAT G10®, EtherCAT P®, Safety over EtherCAT®, TwinSAFE®, XFC®, XTS® and XPlanar® are registered trademarks of and licensed by Beckhoff Automation GmbH. Other designations used in this publication may be trademarks whose use by third parties for their own purposes could violate the rights of the owners.

Patent Pending

The EtherCAT Technology is covered, including but not limited to the following patent applications and patents: EP1590927, EP1789857, EP1456722, EP2137893, DE102015105702 with corresponding applications or registrations in various other countries.

EtherCAT® is registered trademark and patented technology, licensed by Beckhoff Automation GmbH, Germany.

Copyright

© Beckhoff Automation GmbH & Co. KG, Germany.
The reproduction, distribution and utilization of this document as well as the communication of its contents to others without express authorization are prohibited.
Offenders will be held liable for the payment of damages. All rights reserved in the event of the grant of a patent, utility model or design.

1.2 Safety instructions

Safety regulations

Please note the following safety instructions and explanations!
Product-specific safety instructions can be found on following pages or in the areas mounting, wiring, commissioning etc.

Exclusion of liability

All the components are supplied in particular hardware and software configurations appropriate for the application. Modifications to hardware or software configurations other than those described in the documentation are not permitted, and nullify the liability of Beckhoff Automation GmbH & Co. KG.

Personnel qualification

This description is only intended for trained specialists in control, automation and drive engineering who are familiar with the applicable national standards.

Description of instructions

In this documentation the following instructions are used.
These instructions must be read carefully and followed without fail!

⚠ DANGER

Serious risk of injury!

Failure to follow this safety instruction directly endangers the life and health of persons.

⚠ WARNING

Risk of injury!

Failure to follow this safety instruction endangers the life and health of persons.

⚠ CAUTION

Personal injuries!

Failure to follow this safety instruction can lead to injuries to persons.

NOTE

Damage to environment/equipment or data loss

Failure to follow this instruction can lead to environmental damage, equipment damage or data loss.

Tip or pointer

This symbol indicates information that contributes to better understanding.

1.3 Documentation issue status

Version	Comment
4.2.0	• Update chapter “Instructions for ESD protection” • Chapter “Beckhoff Identification Code (BIC)” added
4.1.0	• Example program added to chapter “KS2000 Configuration software“ • Design of the safety instructions adapted to IEC 82079-1
4.0.1	• Update Technical data
4.0	• Migration • Update Technical data • Structure update • Chapters *KS2000 configuration software* and *Access from the user program* added

Firmware (FW) and hardware (HW) versions

Documen-tation, Version	KL3061		KL3062		KL3064	
	FW	HW	FW	HW	FW	HW
4.1.0	3C	09	3C	08	3B	08
4.0	3C	09	3C	08	3B	08

The firmware and hardware versions (delivery state) can be found in the serial number printed on the side of the terminal.

Syntax of the serial number

Structure of the serial number: WW YY FF HH

WW - week of production (calendar week)
YY - year of production
FF - firmware version
HH - hardware version

Example with ser. no.: 35 04 1B 01:

35 - week of production 35
4 - year of production 2004
1B - firmware version 1B
1 - hardware version 1

1.4 Beckhoff Identification Code (BIC)

The Beckhoff Identification Code (BIC) is increasingly being applied to Beckhoff products to uniquely identify the product. The BIC is represented as a Data Matrix Code (DMC, code scheme ECC200), the content is based on the ANSI standard MH10.8.2-2016.

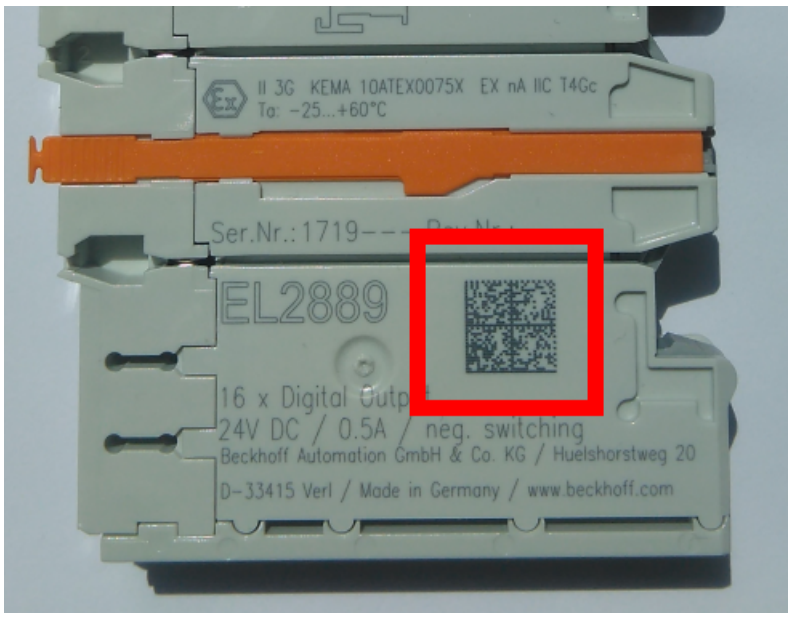

Fig. 1: BIC as data matrix code (DMC, code scheme ECC200)

The BIC will be introduced step by step across all product groups.

Depending on the product, it can be found in the following places:

- on the packaging unit
- directly on the product (if space suffices)
- on the packaging unit and the product

The BIC is machine-readable and contains information that can also be used by the customer for handling and product management.

Each piece of information can be uniquely identified using the so-called data identifier (ANSI MH10.8.2-2016). The data identifier is followed by a character string. Both together have a maximum length according to the table below. If the information is shorter, spaces are added to it. The data under positions 1 to 4 are always available.

The following information is contained:

Item no.	Type of information	Explanation	Data identifier	Number of digits incl. data identifier	Example
1	Beckhoff order number	**Beckhoff order number**	1P	8	1P072222
2	Beckhoff Traceability Number (BTN)	**Unique serial number, see note below**	S	12	SBTNk4p562d7
3	Article description	**Beckhoff article description, e.g. EL1008**	1K	32	1KEL1809
4	Quantity	**Quantity in packaging unit, e.g. 1, 10, etc.**	Q	6	Q1
5	Batch number	Optional: Year and week of production	2P	14	2P401503180016
6	ID/serial number	Optional: Present-day serial number system, e.g. with safety products	51S	12	51S678294104
7	Variant number	Optional: Product variant number on the basis of standard products	30P	32	30PF971, 2*K183
...					

Further types of information and data identifiers are used by Beckhoff and serve internal processes.

Structure of the BIC

Example of composite information from item 1 to 4 and 6. The data identifiers are marked in red for better display:

BTN

An important component of the BIC is the Beckhoff Traceability Number (BTN, item no. 2). The BTN is a unique serial number consisting of eight characters that will replace all other serial number systems at Beckhoff in the long term (e.g. batch designations on IO components, previous serial number range for safety products, etc.). The BTN will also be introduced step by step, so it may happen that the BTN is not yet coded in the BIC.

NOTE

This information has been carefully prepared. However, the procedure described is constantly being further developed. We reserve the right to revise and change procedures and documentation at any time and without prior notice. No claims for changes can be made from the information, illustrations and descriptions in this information.

2 Product overview

2.1 KL306x - Introduction

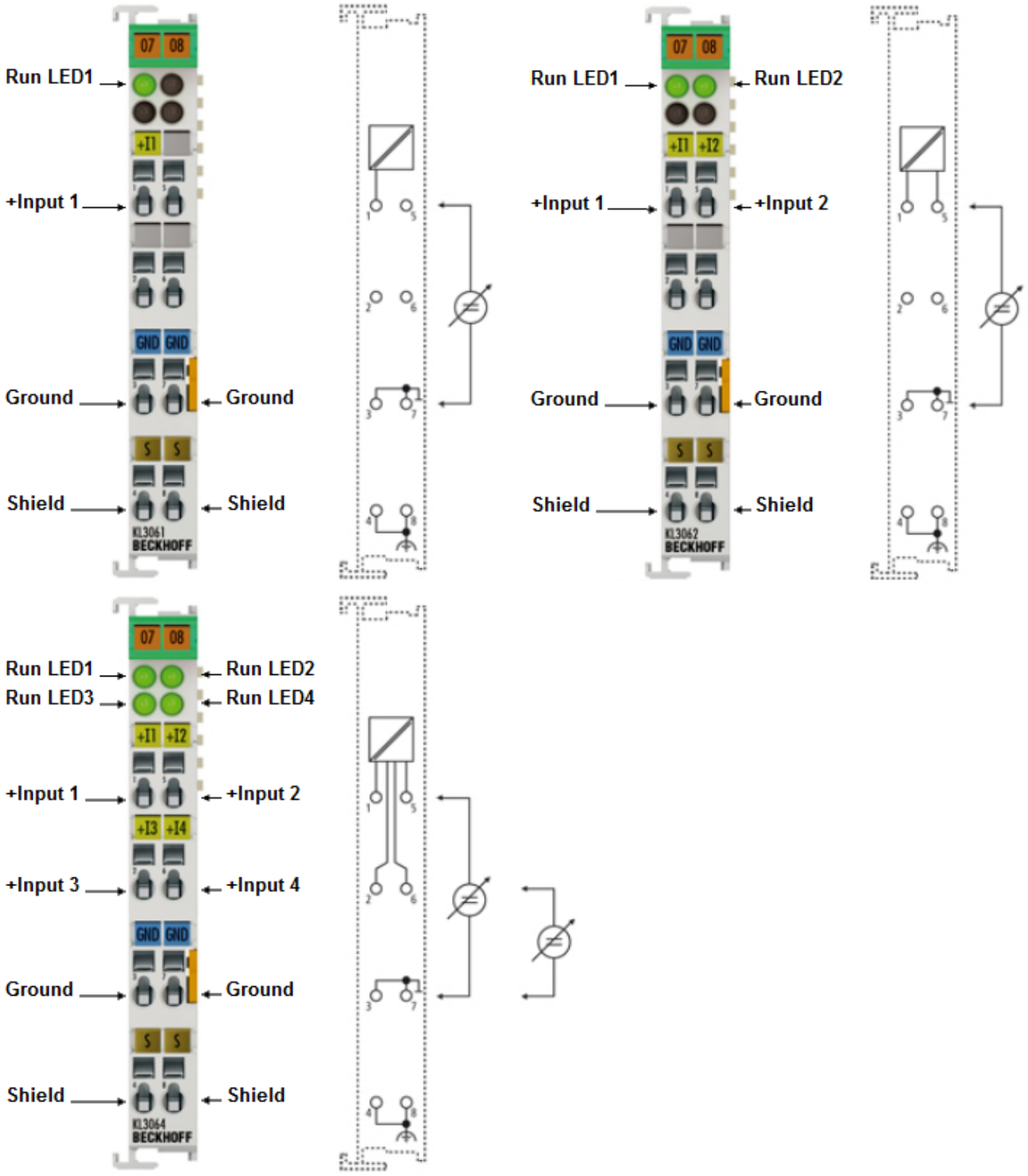

Fig. 2: KL3061, KL3062, KL3064

The KL306x analog input terminals process signals in the range from 0 V to 10 V. The voltage is digitized to a resolution of 12 bits, and is transmitted, electrically isolated, to the higher-level automation device. The input channels of the Bus Terminal have a common ground potential, the reference ground. The Run LEDs give an indication of the data exchange with the Bus Coupler.

2.2 KL306x - Technical data

Technical data	KL3061	KL3062	KL3064
Number of inputs	1	2	4
Power supply for the electronics	via the K-Bus		
Signal voltage	0 V to 10 V		
Technology	Single-ended		
Internal resistance	> 200 kΩ typ.		
Resolution	12 bit		
Conversion time	~ 1 ms	~ 2 ms	~ 4 ms
Measuring error (total measuring range)	< ±0.3 % of the full scale value		< ± 0.30 % (at 0°C to +55°C) < ± 0.75 % (when the extended temperature range is used)
Electrical isolation	500 V (K-Bus / signal voltage)		
Current consumption from the K-bus	typically 60 mA		typically 85 mA
Bit width in the K-bus I/O	Input: 1 x 16 bits of data (1 x 8 bit control/status optional)	Input: 2 x 16 bits of data (2 x 8 bit control/status optional)	Input: 4 x 16 bits of data (4 x 8 bit control/status optional)
Configuration	No address or configuration settings		
Weight	approx. 60 g		approx. 80 g
Dimensions (W x H x D)	approx. 15 mm x 100 mm x 70 mm (width aligned: 12 mm)		
Mounting [▶ 13]	on 35 mm mounting rail conforms to EN 60715		
Permissible ambient temperature range during operation	0°C ... + 55°C		-25°C ... +60°C (extended temperature range)
Permissible ambient temperature range during storage	-25°C ... + 85°C		-40°C ... +85°C
Permissible relative air humidity	95%, no condensation		
Vibration / shock resistance	conforms to EN 60068-2-6 / EN 60068-2-27, see also Installation instructions for enhanced mechanical load capacity [▶ 17]		
EMC immunity / emission	conforms to EN 61000-6-2 / EN 61000-6-4		
Protection class	IP20		
Installation position	variable		
Approval	CE, cULus, ATEX [▶ 24]		CE, cULus, ATEX [▶ 25], GL

2.3 Basic function principles

The Analog Input Terminal KL306x processes signals in the range between 0 V and +10 V with a resolution of 12 bits (4095 steps). The inputs of the KL306x are single-ended inputs with a common ground potential.

The LEDs indicate the operating state of the associated terminal channels.

- green Run LED:
  - On: Normal operation
  - Off: Watchdog-timer overflow has occurred. If no process data are transmitted by the Bus Coupler for 100 ms, the green LEDs go out.

Process data output format

In the delivery state the process data are shown in two's complement form (integer -1 corresponds to 0xFFFF). Other presentation types can be selected via the feature register (R32) [▶ 41] (e.g. signed amount representation, Siemens output format).

Measured value	Output	
KL306x	dec	hex
0 V	0	0x0000
5 V	16383	0x3FFF
10 V	32767	0x7FFF

Calculation of process data

The terminal continuously takes measured values and stores the raw values of its A/D converter in register R0 [▶ 39] (RAM). The calculation of the correction with the calibration values takes place after each sampling of the analog signal. This is followed by manufacturer and user scaling:

The process data that are transferred to the Bus Coupler are calculated using the following equations:

Y_a = (B_a + X_adc) * A_a Y_aus = Y_a	(1.0)	Neither user nor manufacturer scaling is active.
Y_1 = B_h + A_h * Y_a Y_aus = Y_1	(1.1)	Manufacturer scaling active: (Default setting)
Y_2 = B_w + A_w * Y_a Y_aus = Y_2	(1.2)	User scaling active
Y_1 = B_h + A_h * Y_a Y_2 = B_w + A_w * Y_1 Y_aus = Y_2	(1.3) (1.4)	Manufacturer and user scaling active

Key

Name	Name	Register
X_adc	Output value of the A/D converter	-
Y_aus	Process data for controller	-
B_a	Vendor calibration: Offset	R17 [▶ 40]
A_a	Vendor calibration: Gain	R18 [▶ 40]
B_h	Manufacturer scaling: Offset	R19 [▶ 40]
A_h	Manufacturer scaling: Gain	R20 [▶ 40]
B_w	User scaling: Offset	R33 [▶ 41]
A_w	User scaling: Gain	R34 [▶ 41]

The equations of the straight line are enabled via register R32 [▶ 41].

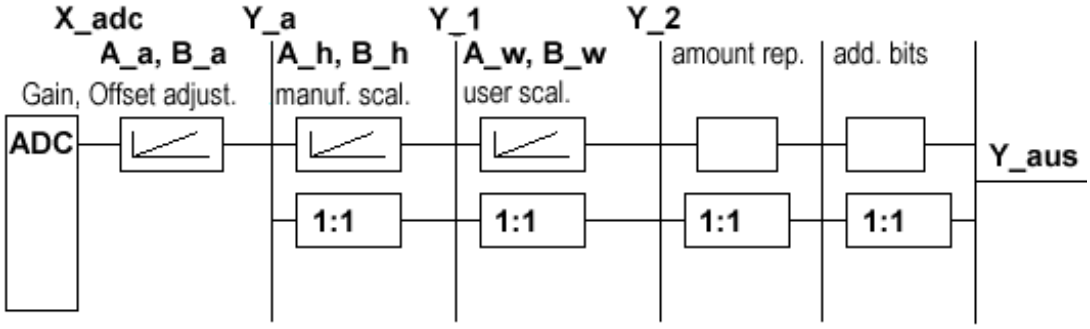

Fig. 3: KL306x – Data flow

3 Mounting and wiring

3.1 Instructions for ESD protection

NOTE

Destruction of the devices by electrostatic discharge possible!

The devices contain components at risk from electrostatic discharge caused by improper handling.

- Please ensure you are electrostatically discharged and avoid touching the contacts of the device directly.
- Avoid contact with highly insulating materials (synthetic fibers, plastic film etc.).
- Surroundings (working place, packaging and personnel) should by grounded probably, when handling with the devices.
- Each assembly must be terminated at the right hand end with a KL9010 bus end terminal, to ensure the protection class and ESD protection.

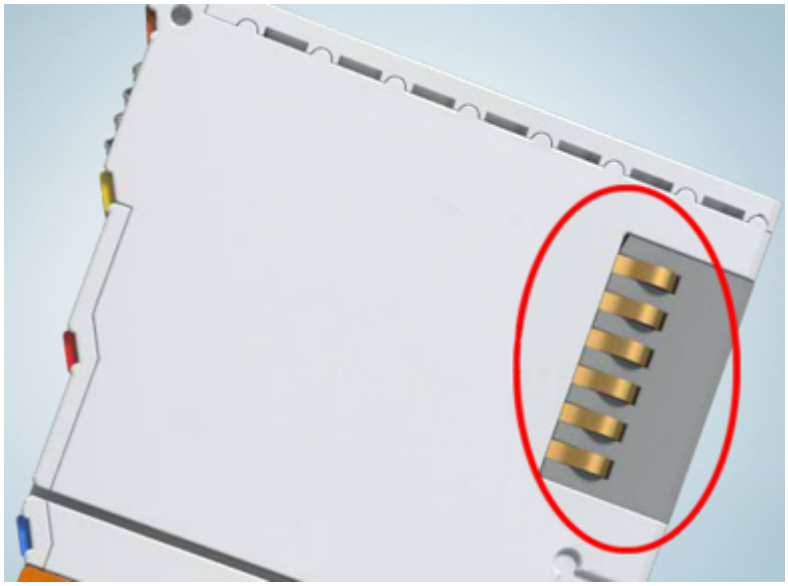

Fig. 4: Spring contacts of the Beckhoff I/O components

3.2 Installation on mounting rails

⚠ WARNING

Risk of electric shock and damage of device!

Bring the bus terminal system into a safe, powered down state before starting installation, disassembly or wiring of the bus terminals!

Assembly

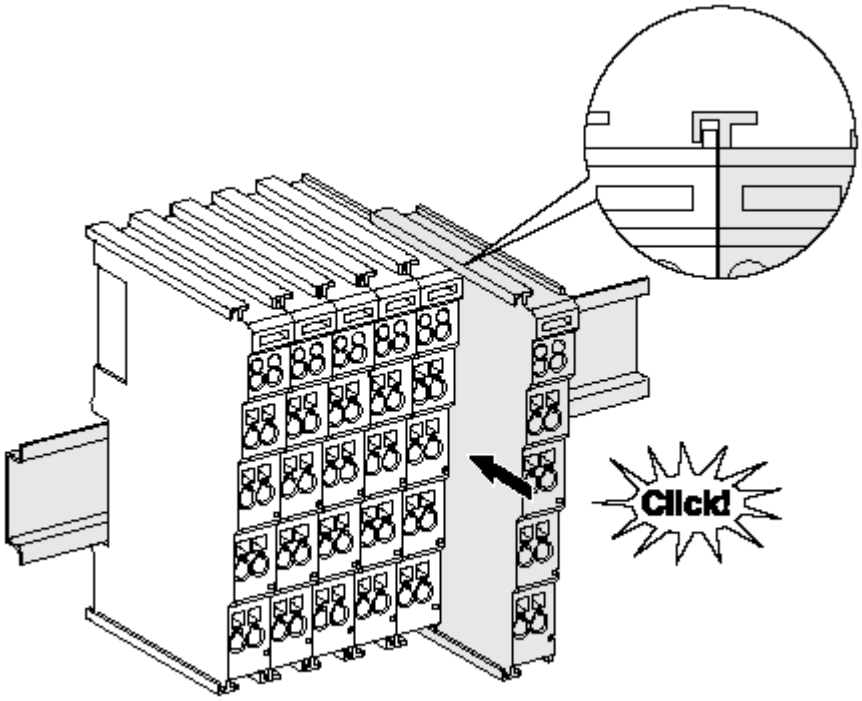

Fig. 5: Attaching on mounting rail

The bus coupler and bus terminals are attached to commercially available 35 mm mounting rails (DIN rails according to EN 60715) by applying slight pressure:

1. First attach the fieldbus coupler to the mounting rail.
2. The bus terminals are now attached on the right-hand side of the fieldbus coupler. Join the components with tongue and groove and push the terminals against the mounting rail, until the lock clicks onto the mounting rail.
   If the terminals are clipped onto the mounting rail first and then pushed together without tongue and groove, the connection will not be operational! When correctly assembled, no significant gap should be visible between the housings.

Fixing of mounting rails

The locking mechanism of the terminals and couplers extends to the profile of the mounting rail. At the installation, the locking mechanism of the components must not come into conflict with the fixing bolts of the mounting rail. To mount the mounting rails with a height of 7.5 mm under the terminals and couplers, you should use flat mounting connections (e.g. countersunk screws or blind rivets).

Disassembly

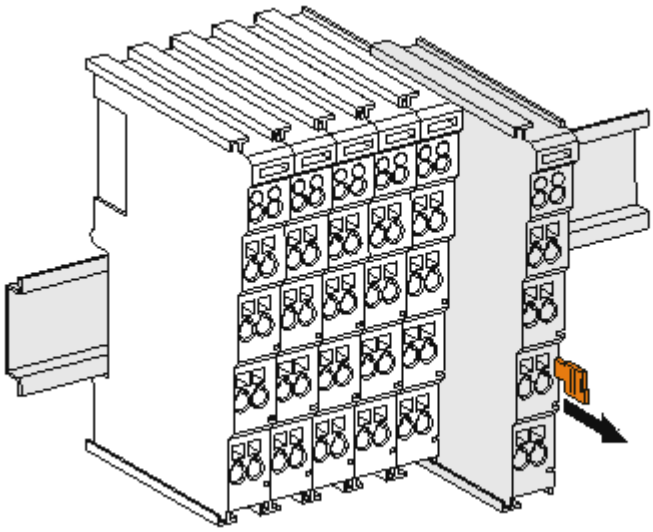

Fig. 6: Disassembling of terminal

Each terminal is secured by a lock on the mounting rail, which must be released for disassembly:

1. Pull the terminal by its orange-colored lugs approximately 1 cm away from the mounting rail. In doing so for this terminal the mounting rail lock is released automatically and you can pull the terminal out of the bus terminal block easily without excessive force.
2. Grasp the released terminal with thumb and index finger simultaneous at the upper and lower grooved housing surfaces and pull the terminal out of the bus terminal block.

Connections within a bus terminal block

The electric connections between the Bus Coupler and the Bus Terminals are automatically realized by joining the components:

- The six spring contacts of the K-Bus/E-Bus deal with the transfer of the data and the supply of the Bus Terminal electronics.
- The power contacts deal with the supply for the field electronics and thus represent a supply rail within the bus terminal block. The power contacts are supplied via terminals on the Bus Coupler (up to 24 V) or for higher voltages via power feed terminals.

Power Contacts

During the design of a bus terminal block, the pin assignment of the individual Bus Terminals must be taken account of, since some types (e.g. analog Bus Terminals or digital 4-channel Bus Terminals) do not or not fully loop through the power contacts. Power Feed Terminals (KL91xx, KL92xx or EL91xx, EL92xx) interrupt the power contacts and thus represent the start of a new supply rail.

PE power contact

The power contact labeled PE can be used as a protective earth. For safety reasons this contact mates first when plugging together, and can ground short-circuit currents of up to 125 A.

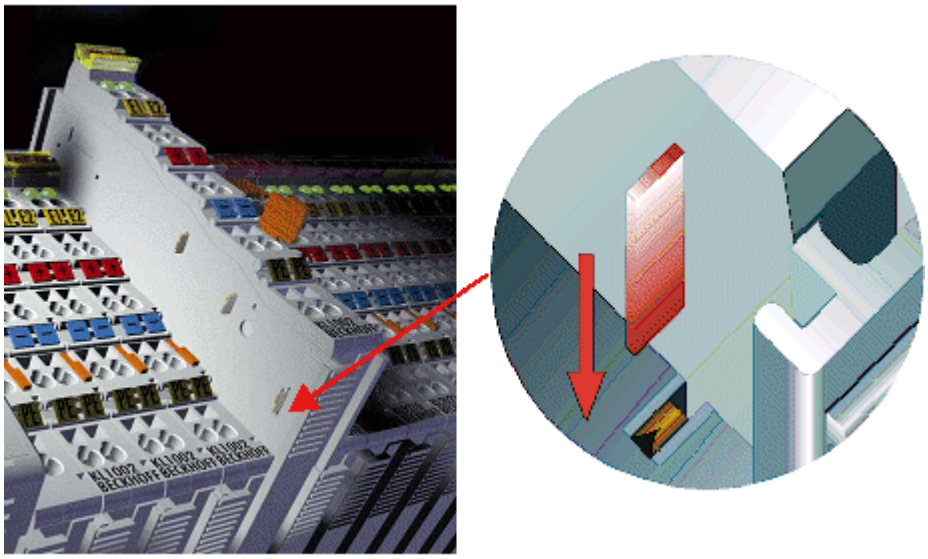

Fig. 7: Power contact on left side

NOTE

Possible damage of the device

Note that, for reasons of electromagnetic compatibility, the PE contacts are capacitatively coupled to the mounting rail. This may lead to incorrect results during insulation testing or to damage on the terminal (e.g. disruptive discharge to the PE line during insulation testing of a consumer with a nominal voltage of 230 V). For insulation testing, disconnect the PE supply line at the Bus Coupler or the Power Feed Terminal! In order to decouple further feed points for testing, these Power Feed Terminals can be released and pulled at least 10 mm from the group of terminals.

⚠ WARNING

Risk of electric shock!

The PE power contact must not be used for other potentials!

3.3 Installation instructions for enhanced mechanical load capacity

⚠ WARNING

Risk of injury through electric shock and damage to the device!

Bring the Bus Terminal system into a safe, de-energized state before starting mounting, disassembly or wiring of the Bus Terminals!

Additional checks

The terminals have undergone the following additional tests:

Verification	Explanation
Vibration	10 frequency runs in 3 axes
	6 Hz < f < 60 Hz displacement 0.35 mm, constant amplitude
	60.1 Hz < f < 500 Hz acceleration 5 *g*, constant amplitude
Shocks	1000 shocks in each direction, in 3 axes
	25 *g*, 6 ms

Additional installation instructions

For terminals with enhanced mechanical load capacity, the following additional installation instructions apply:

- The enhanced mechanical load capacity is valid for all permissible installation positions
- Use a mounting rail according to EN 60715 TH35-15
- Fix the terminal segment on both sides of the mounting rail with a mechanical fixture, e.g. an earth terminal or reinforced end clamp
- The maximum total extension of the terminal segment (without coupler) is:
  64 terminals (12 mm mounting with) or 32 terminals (24 mm mounting with)
- Avoid deformation, twisting, crushing and bending of the mounting rail during edging and installation of the rail
- The mounting points of the mounting rail must be set at 5 cm intervals
- Use countersunk head screws to fasten the mounting rail
- The free length between the strain relief and the wire connection should be kept as short as possible. A distance of approx. 10 cm should be maintained to the cable duct.

3.4 Connection

3.4.1 Connection system

⚠ WARNING

Risk of electric shock and damage of device!

Bring the bus terminal system into a safe, powered down state before starting installation, disassembly or wiring of the bus terminals!

Overview

The Bus Terminal system offers different connection options for optimum adaptation to the respective application:

- The terminals of ELxxxx and KLxxxx series with standard wiring include electronics and connection level in a single enclosure.

- The terminals of ESxxxx and KSxxxx series feature a pluggable connection level and enable steady wiring while replacing.
- The High Density Terminals (HD Terminals) include electronics and connection level in a single enclosure and have advanced packaging density.

Standard wiring (ELxxxx / KLxxxx)

Fig. 8: Standard wiring

The terminals of ELxxxx and KLxxxx series have been tried and tested for years.
They feature integrated screwless spring force technology for fast and simple assembly.

Pluggable wiring (ESxxxx / KSxxxx)

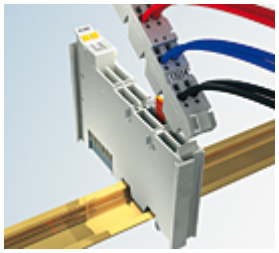

Fig. 9: Pluggable wiring

The terminals of ESxxxx and KSxxxx series feature a pluggable connection level.
The assembly and wiring procedure is the same as for the ELxxxx and KLxxxx series.
The pluggable connection level enables the complete wiring to be removed as a plug connector from the top of the housing for servicing.
The lower section can be removed from the terminal block by pulling the unlocking tab.
Insert the new component and plug in the connector with the wiring. This reduces the installation time and eliminates the risk of wires being mixed up.

The familiar dimensions of the terminal only had to be changed slightly. The new connector adds about 3 mm. The maximum height of the terminal remains unchanged.

A tab for strain relief of the cable simplifies assembly in many applications and prevents tangling of individual connection wires when the connector is removed.

Conductor cross sections between 0.08 mm^2 and 2.5 mm^2 can continue to be used with the proven spring force technology.

The overview and nomenclature of the product names for ESxxxx and KSxxxx series has been retained as known from ELxxxx and KLxxxx series.

High Density Terminals (HD Terminals)

Fig. 10: High Density Terminals

The Bus Terminals from these series with 16 terminal points are distinguished by a particularly compact design, as the packaging density is twice as large as that of the standard 12 mm Bus Terminals. Massive conductors and conductors with a wire end sleeve can be inserted directly into the spring loaded terminal point without tools.

Wiring HD Terminals

The High Density (HD) Terminals of the ELx8xx and KLx8xx series doesn't support pluggable wiring.

Ultrasonically "bonded" (ultrasonically welded) conductors

Ultrasonically “bonded" conductors

It is also possible to connect the Standard and High Density Terminals with ultrasonically "bonded" (ultrasonically welded) conductors. In this case, please note the tables concerning the wire-size width below!

3.4.2 Wiring

⚠ WARNING

Risk of electric shock and damage of device!

Bring the bus terminal system into a safe, powered down state before starting installation, disassembly or wiring of the Bus Terminals!

Terminals for standard wiring ELxxxx/KLxxxx and for pluggable wiring ESxxxx/KSxxxx

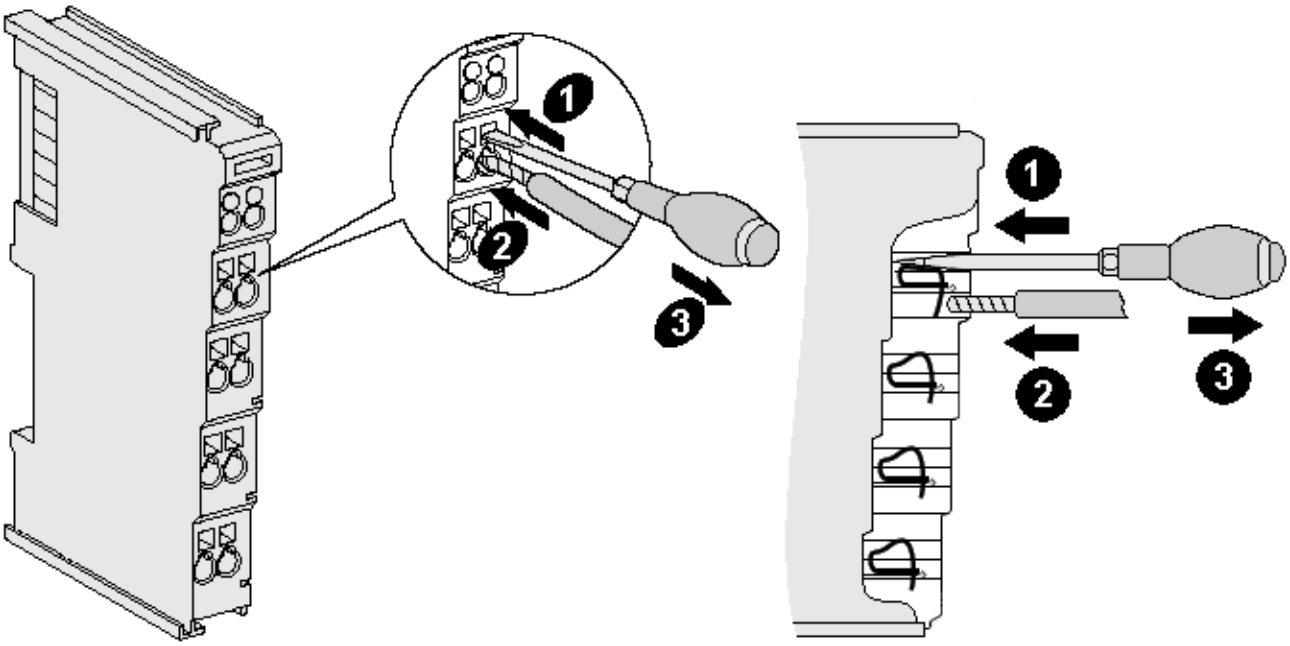

Fig. 11: Connecting a cable on a terminal point

Up to eight terminal points enable the connection of solid or finely stranded cables to the Bus Terminal. The terminal points are implemented in spring force technology. Connect the cables as follows:

1. Open a terminal point by pushing a screwdriver straight against the stop into the square opening above the terminal point. Do not turn the screwdriver or move it alternately (don't toggle).
2. The wire can now be inserted into the round terminal opening without any force.
3. The terminal point closes automatically when the pressure is released, holding the wire securely and permanently.

See the following table for the suitable wire size width.

Terminal housing	ELxxxx, KLxxxx	ESxxxx, KSxxxx
Wire size width (single core wires)	0.08 ... 2.5 mm^2	0.08 ... 2.5 mm^2
Wire size width (fine-wire conductors)	0.08 ... 2.5 mm^2	0,08 ... 2.5 mm^2
Wire size width (conductors with a wire end sleeve)	0.14 ... 1.5 mm^2	0.14 ... 1.5 mm^2
Wire stripping length	8 ... 9 mm	9 ... 10 mm

High Density Terminals (HD Terminals [▶ 19]) with 16 terminal points

The conductors of the HD Terminals are connected without tools for single-wire conductors using the direct plug-in technique, i.e. after stripping the wire is simply plugged into the terminal point. The cables are released, as usual, using the contact release with the aid of a screwdriver. See the following table for the suitable wire size width.

Terminal housing	High Density Housing
Wire size width (single core wires)	0.08 ... 1.5 mm^2
Wire size width (fine-wire conductors)	0.25 ... 1.5 mm^2
Wire size width (conductors with a wire end sleeve)	0.14 ... 0.75 mm^2
Wire size width (ultrasonically “bonded" conductors)	only 1.5 mm^2
Wire stripping length	8 ... 9 mm

3.4.3 Shielding

Shielding

Encoder, analog sensors and actors should always be connected with shielded, twisted paired wires.

3.5 KL3061, KL3062 - Connection and LED description

⚠ WARNING

Risk of injury through electric shock and damage to the device!

Bring the Bus Terminals system into a safe, de-energized state before starting mounting, disassembly or wiring of the Bus Terminals!

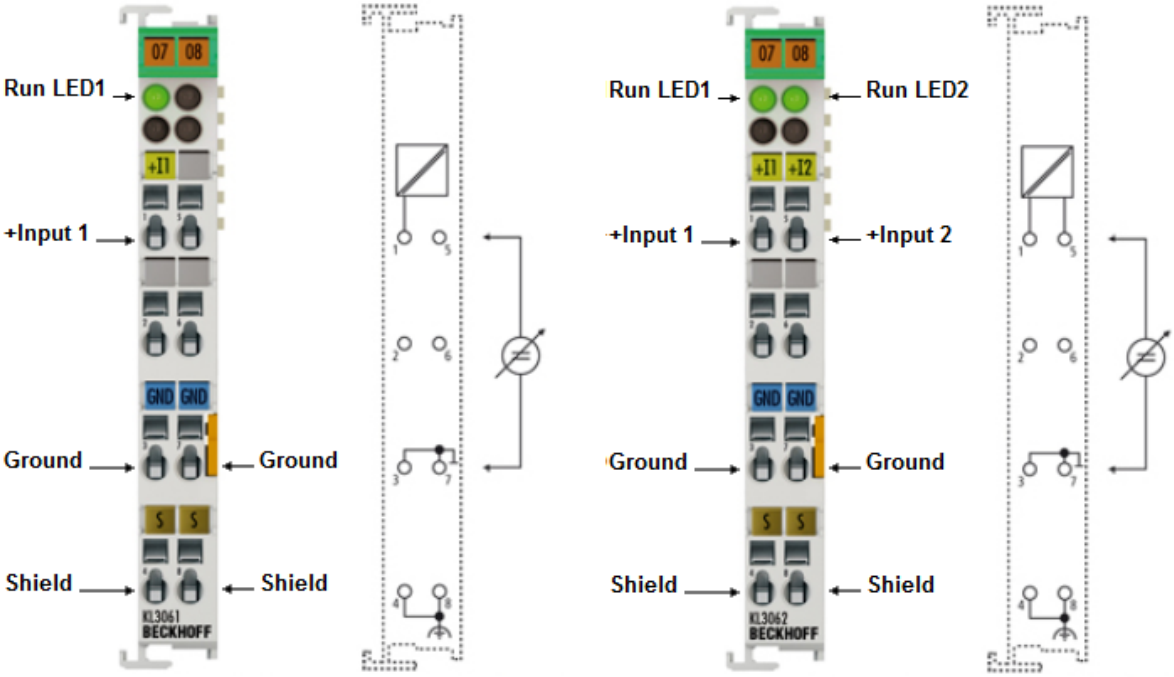

Fig. 12: KL3061, KL3062 – Connection and LEDs

Connection of KL3061		
Terminal point	**No.**	**Comment**
+Input 1	1	+ Input 1
n.c.	2	not used
GND	3	Internal ground (internally connected to terminal point 7)
Shield	4	PE contact (internally connected to terminal point 8)
n.c.	5	not used
n.c.	6	not used
GND	7	Internal ground (internally connected to terminal point 3)
Shield	8	PE contact (internally connected to terminal point 4)

Connection of KL3062		
Terminal point	**No.**	**Comment**
+Input 1	1	+ Input 1
n.c.	2	not used
GND	3	Internal ground (internally connected to terminal point 7)
Shield	4	PE contact (internally connected to terminal point 8)
+Input 2	5	+ Input 2
n.c.	6	not used
GND	7	Internal ground (internally connected to terminal point 3)
Shield	8	PE contact (internally connected to terminal point 4)

KL3061, KL3062 - LED description			
LED	**Color**	**Description**	
Run1 LED Run2 LED (KL3062 only)	green	On:	Normal operation
		Off:	Watchdog-timer overflow has occurred. If no process data is transmitted to the bus coupler for 100 ms, the green LEDs go out

3.6 KL3064 - Connection and LED description

⚠ WARNING

Risk of injury through electric shock and damage to the device!

Bring the Bus Terminals system into a safe, de-energized state before starting mounting, disassembly or wiring of the Bus Terminals!

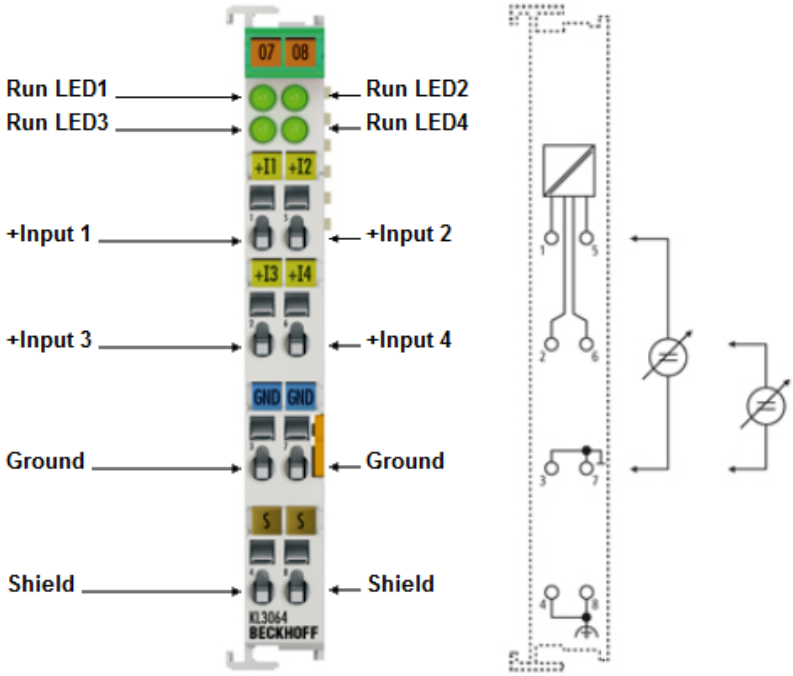

Fig. 13: KL3064 -Connection and LEDs

Connection of KL3064		
Terminal point	**No.**	**Comment**
+Input 1	1	+ Input 1
+Input 3	2	+ Input 3
GND	3	Internal ground (internally connected to terminal point 7)
Shield	4	PE contact (internally connected to terminal point 8)
+Input 2	5	+ Input 2
+Input 4	6	+ Input 4
GND	7	Internal ground (internally connected to terminal point 3)
Shield	8	PE contact (internally connected to terminal point 4)

KL3064 - LED description			
LED	**Color**	**Description**	
Run1 LED Run2 LED Run3 LED Run4 LED	green	On:	Normal operation
		Off:	Watchdog-timer overflow has occurred. If no process data is transmitted to the bus coupler for 100 ms, the green LEDs go out

3.7 ATEX - Special conditions (standard temperature range)

⚠ WARNING

Observe the special conditions for the intended use of Beckhoff fieldbus components with standard temperature range in potentially explosive areas (directive 2014/34/EU)!

- The certified components are to be installed in a suitable housing that guarantees a protection class of at least IP54 in accordance with EN 60079-15! The environmental conditions during use are thereby to be taken into account!
- If the temperatures during rated operation are higher than 70°C at the feed-in points of cables, lines or pipes, or higher than 80°C at the wire branching points, then cables must be selected whose temperature data correspond to the actual measured temperature values!
- Observe the permissible ambient temperature range of 0 to 55°C for the use of Beckhoff fieldbus components standard temperature range in potentially explosive areas!
- Measures must be taken to protect against the rated operating voltage being exceeded by more than 40% due to short-term interference voltages!
- The individual terminals may only be unplugged or removed from the Bus Terminal system if the supply voltage has been switched off or if a non-explosive atmosphere is ensured!
- The connections of the certified components may only be connected or disconnected if the supply voltage has been switched off or if a non-explosive atmosphere is ensured!
- The fuses of the KL92xx/EL92xx power feed terminals may only be exchanged if the supply voltage has been switched off or if a non-explosive atmosphere is ensured!
- Address selectors and ID switches may only be adjusted if the supply voltage has been switched off or if a non-explosive atmosphere is ensured!

Standards

The fundamental health and safety requirements are fulfilled by compliance with the following standards:

- EN 60079-0:2012+A11:2013
- EN 60079-15:2010

Marking

The Beckhoff fieldbus components with standard temperature range certified according to the ATEX directive for potentially explosive areas bear one of the following markings:

II 3G KEMA 10ATEX0075 X Ex nA IIC T4 Gc Ta: 0 … +55°C

or

II 3G KEMA 10ATEX0075 X Ex nC IIC T4 Gc Ta: 0 … +55°C

3.8 ATEX - Special conditions (extended temperature range)

⚠ WARNING

Observe the special conditions for the intended use of Beckhoff fieldbus components with extended temperature range (ET) in potentially explosive areas (directive 2014/34/EU)!

- The certified components are to be installed in a suitable housing that guarantees a protection class of at least IP54 in accordance with EN 60079-15! The environmental conditions during use are thereby to be taken into account!
- If the temperatures during rated operation are higher than 70°C at the feed-in points of cables, lines or pipes, or higher than 80°C at the wire branching points, then cables must be selected whose temperature data correspond to the actual measured temperature values!
- Observe the permissible ambient temperature range of -25 to 60°C for the use of Beckhoff fieldbus components with extended temperature range (ET) in potentially explosive areas!
- Measures must be taken to protect against the rated operating voltage being exceeded by more than 40% due to short-term interference voltages!
- The individual terminals may only be unplugged or removed from the Bus Terminal system if the supply voltage has been switched off or if a non-explosive atmosphere is ensured!
- The connections of the certified components may only be connected or disconnected if the supply voltage has been switched off or if a non-explosive atmosphere is ensured!
- The fuses of the KL92xx/EL92xx power feed terminals may only be exchanged if the supply voltage has been switched off or if a non-explosive atmosphere is ensured!
- Address selectors and ID switches may only be adjusted if the supply voltage has been switched off or if a non-explosive atmosphere is ensured!

Standards

The fundamental health and safety requirements are fulfilled by compliance with the following standards:

- EN 60079-0:2012+A11:2013
- EN 60079-15:2010

Marking

The Beckhoff fieldbus components with extended temperature range (ET) certified according to the ATEX directive for potentially explosive areas bear the following marking:

II 3G KEMA 10ATEX0075 X Ex nA IIC T4 Gc Ta: -25 … +60°C

or

II 3G KEMA 10ATEX0075 X Ex nC IIC T4 Gc Ta: -25 … +60°C

3.9 ATEX Documentation

Notes about operation of the Beckhoff terminal systems in potentially explosive areas (ATEX)

Pay also attention to the continuative documentation

Notes about operation of the Beckhoff terminal systems in potentially explosive areas (ATEX)

that is available in the download area of the Beckhoff homepage http:\\www.beckhoff.com!

4 Configuration Software KS2000

4.1 KS2000 - Introduction

The KS2000 configuration software permits configuration, commissioning and parameterization of bus couplers, of the affiliated bus terminals and of Fieldbus Box Modules. The connection between bus coupler / Fieldbus Box Module and the PC is established by means of the serial configuration cable or the fieldbus.

Fig. 14: KS2000 configuration software

Configuration

You can configure the Fieldbus stations with the Configuration Software KS2000 offline. That means, setting up a terminal station with all settings on the couplers and terminals resp. the Fieldbus Box Modules can be prepared before the commissioning phase. Later on, this configuration can be transferred to the terminal station in the commissioning phase by means of a download. For documentation purposes, you are provided with the breakdown of the terminal station, a parts list of modules used and a list of the parameters you have modified. After an upload, existing fieldbus stations are at your disposal for further editing.

Parameterization

KS2000 offers simple access to the parameters of a fieldbus station: specific high-level dialogs are available for all bus couplers, all intelligent bus terminals and Fieldbus Box modules with the aid of which settings can be modified easily. Alternatively, you have full access to all internal registers of the bus couplers and intelligent terminals. Refer to the register description for the meanings of the registers.

Commissioning

The KS2000 software facilitates commissioning of machine components or their fieldbus stations: Configured settings can be transferred to the fieldbus modules by means of a download. After a *login* to the terminal station, it is possible to define settings in couplers, terminals and Fieldbus Box modules directly *online*. The same high-level dialogs and register access are available for this purpose as in the configuration phase.

The KS2000 offers access to the process images of the bus couplers and Fieldbus Box modules.

- Thus, the coupler's input and output images can be observed by monitoring.
- Process values can be specified in the output image for commissioning of the output modules.

All possibilities in the *online mode* can be used in parallel with the actual fieldbus mode of the terminal station. The fieldbus protocol always has the higher priority in this case.

4.2 Sample program for KL register communication via EtherCAT on KL3314 exemplary

Using the sample programs

This document contains sample applications of our products for certain areas of application. The application notes provided here are based on typical features of our products and only serve as examples. The notes contained in this document explicitly do not refer to specific applications. The customer is therefore responsible for assessing and deciding whether the product is suitable for a particular application. We accept no responsibility for the completeness and correctness of the source code contained in this document. We reserve the right to modify the content of this document at any time and accept no responsibility for errors and missing information.

Program description / function

This example program (TwinCAT 3) provides change of single register values of the KL3314 as selection of the element type, characteristical settings of the feature register R32 and user scaling offset and gain (R33/R34) similar as per KS2000.

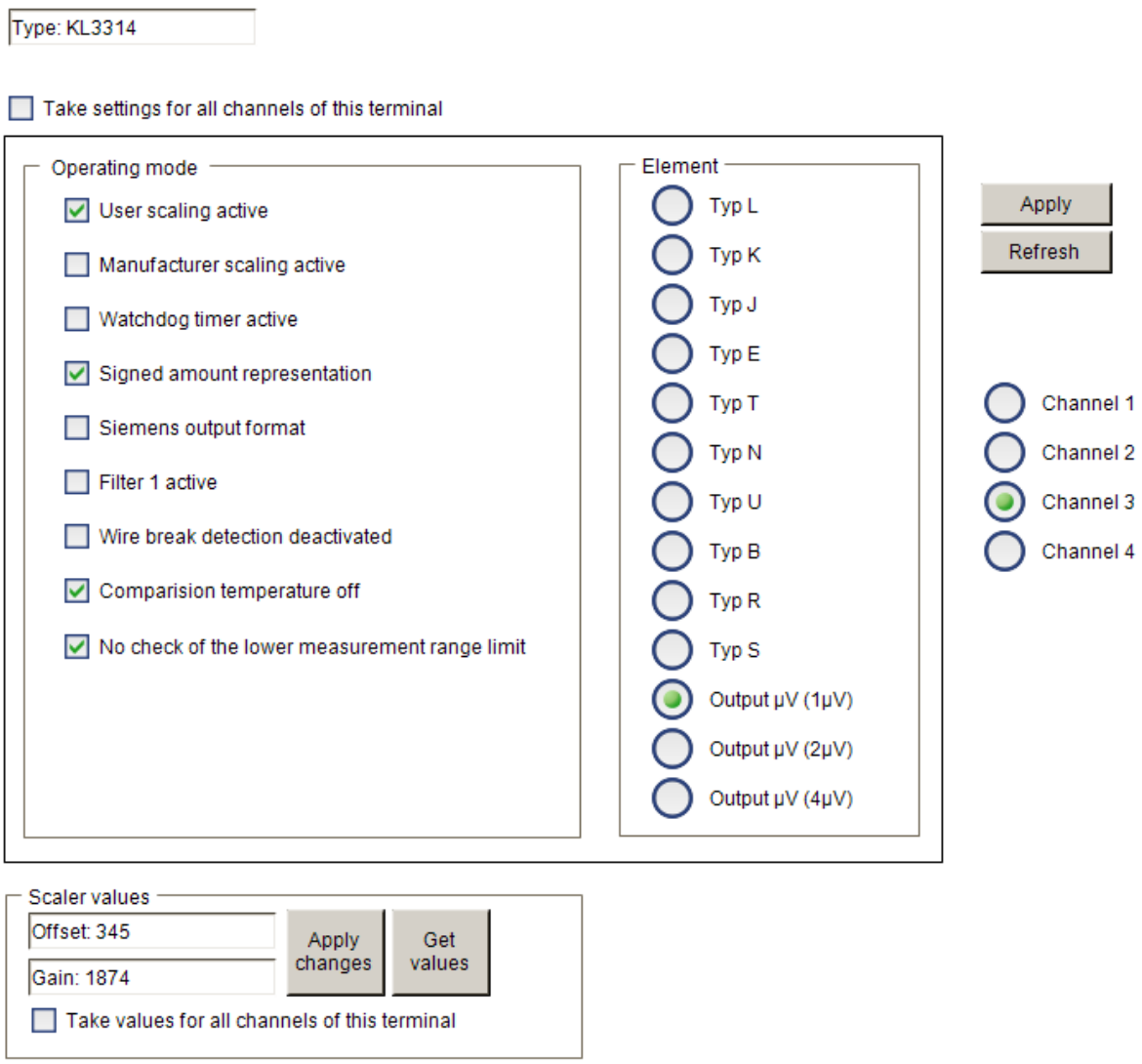

Fig. 15: Settings of KL3314 via visualisation of TwinCAT 3

At least following configuration setup shall be present:

[coupler (e.g. BK1120) or embedded PC] + KL3314 + KL9010.

Download:
https://infosys.beckhoff.com/content/1033/kl306x/Resources/zip/5996114571.zip

Preparations for starting the sample programs (tnzip file / TwinCAT 3)

- Click on the download button to save the Zip archive locally on your hard disk, then unzip the *.tnzip archive file in a temporary folder.

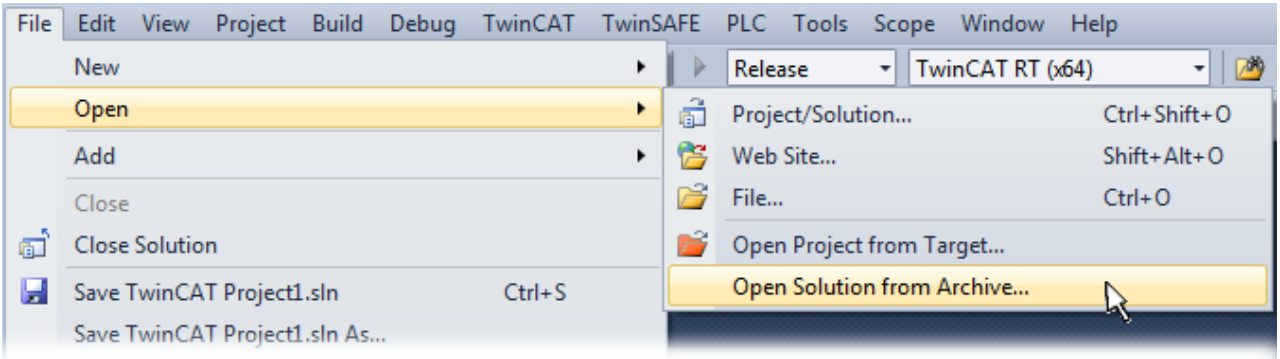

Fig. 16: Opening the *. tnzip archive

- Select the .tnzip file (sample program).
- A further selection window opens. Select the destination directory for storing the project.
- For a description of the general PLC commissioning procedure and starting the program please refer to the terminal documentation or the EtherCAT system documentation.
- The EtherCAT device of the example should usually be declared your present system. After selection of the EtherCAT device in the “Solutionexplorer” select the “Adapter” tab and click on “Search...”:

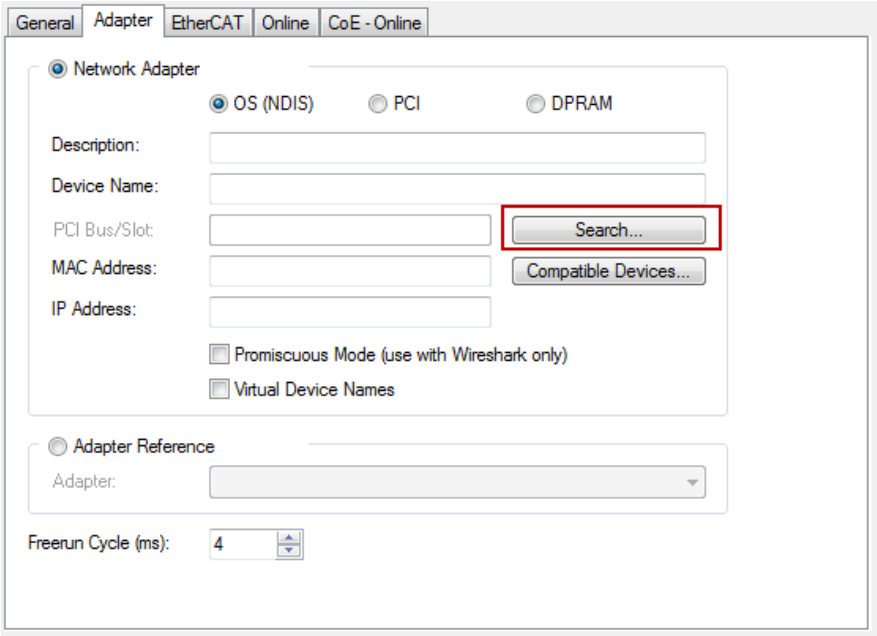

Fig. 17: Search of the existing HW configuration for the EtherCAT configuration of the example

- Checking NetId: the "EtherCAT" tab of the EtherCAT device shows the configured NetId:

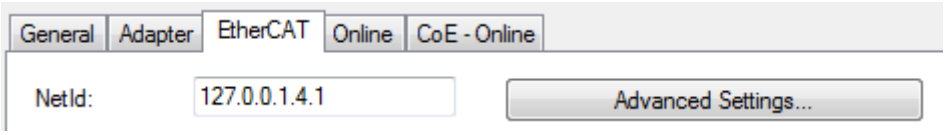

  The first 4 numbers have to be identical with the project NetId of the target system. The project NetId can be viewed within the TwinCAT environment above, where a pull down menu can be opened to choose a target system (by clicking right in the text field). The number blocks are placed in brackets there next to each computer name of a target system.
- Modify the NetId: By right clicking on "EtherCAT device" within the solution explorer a context menu opens where "Change NetId..." have to be selected. The first 4 numbers of the NetId of the target computer have to be entered; the both last values are 4.1 usually.
  Example:
  - NetId of project: myComputer (123.45.67.89.1.1)
  - Entry via „Change NetId...“: 123.45.67.89.4.1

5 Access from the user program

5.1 KL3061, KL3062 - Terminal configuration

The terminal can be configured and parameterized via the internal register structure. Each terminal channel is mapped in the Bus Coupler. Mapping of the terminal data in the Bus Coupler memory may differ, depending on the Bus Coupler type and the set mapping configuration (e.g. Motorola/Intel format, word alignment etc.). For parameterizing a terminal, the control and status byte also has to be mapped.

BK2000 Lightbus Coupler

In the BK2000 Lightbus Coupler, the control/status byte is always mapped, in addition to the data bytes. This is always located in the low byte at the offset address of the terminal channel.

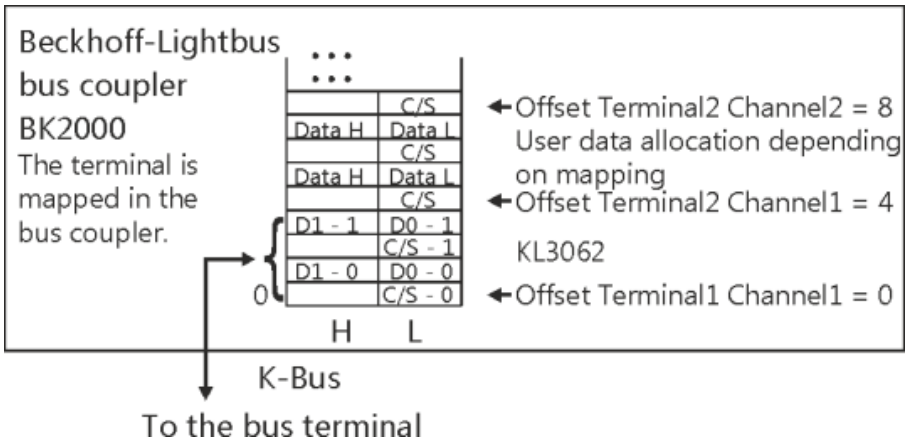

Fig. 18: Mapping in the Lightbus coupler - example for KL3062

BK3000 Profibus Coupler

For the BK3000 Profibus coupler, the master configuration should specify for which terminal channels the control and status byte is to be inserted. If the control and status byte are not evaluated, the terminals occupy 2 bytes per channel:

- KL3061: 2 bytes of input data
- KL3062: 4 bytes of input data

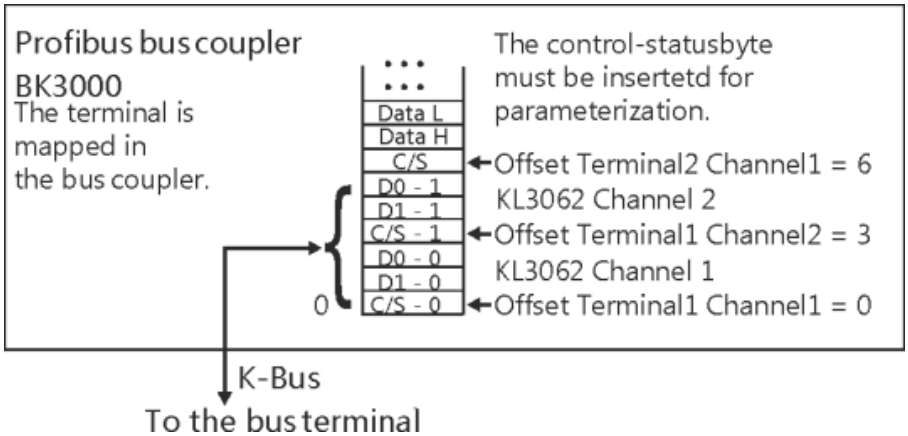

Fig. 19: Mapping in the Profibus coupler - example for KL3062

BK4000 Interbus Coupler

The BK4000 Interbus Coupler maps the terminals in the delivery state with 2 bytes per channel:

- KL3061: 2 bytes of input data

- KL3062: 4 bytes of input data

Parameterization via the fieldbus is not possible. If the control and status byte is to be used, the KS2000 configuration software is required.

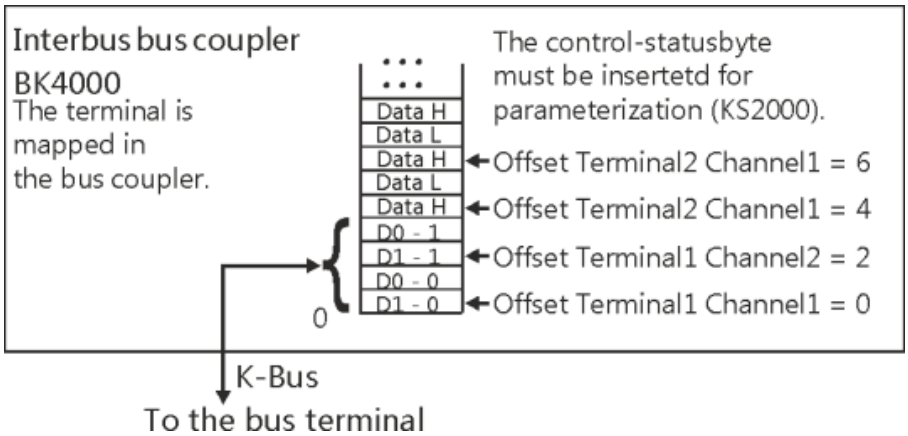

Fig. 20: Mapping in the Interbus coupler - example for KL3062

Other Bus Couplers and further information

Further information about the mapping configuration of Bus Couplers can be found in the Appendix of the respective Bus Coupler manual under *Master configuration*.

The chapter on Mapping in the Bus Coupler contains an overview of possible mapping configurations, depending on the configurable parameters.

Parameterization with KS2000

The KS2000 configuration software can be used for parameterizations via the serial interface of the Bus Coupler, independent of the fieldbus system.

5.2 KL3064 – Terminal configuration

The terminal can be configured and parameterized via the internal register structure. Each terminal channel is mapped in the Bus Coupler. Mapping of the terminal data in the Bus Coupler memory may differ, depending on the Bus Coupler type and the set mapping configuration (e.g. Motorola/Intel format, word alignment etc.). For parameterizing a terminal, the control and status byte also has to be mapped.

BK2000 Lightbus Coupler

In the BK2000 Lightbus Coupler, the control/status byte is always mapped, in addition to the data bytes. This is always located in the low byte at the offset address of the terminal channel.

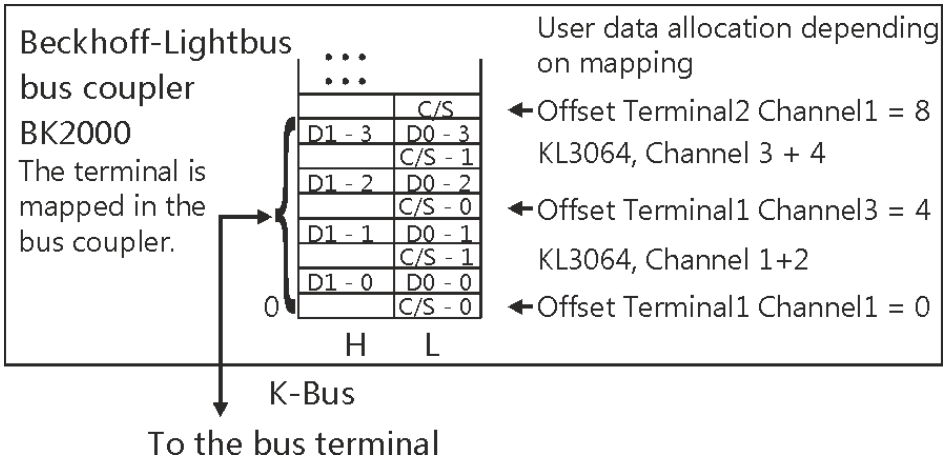

Fig. 21: Mapping in the Lightbus coupler – example for KL3064

BK3000 Profibus Coupler

For the BK3000 Profibus coupler, the master configuration should specify for which terminal channels the control and status byte is to be inserted. If control and status bytes are not evaluated, the KL3064 allocates 8 bytes of input data (2 bytes of user data per channel)

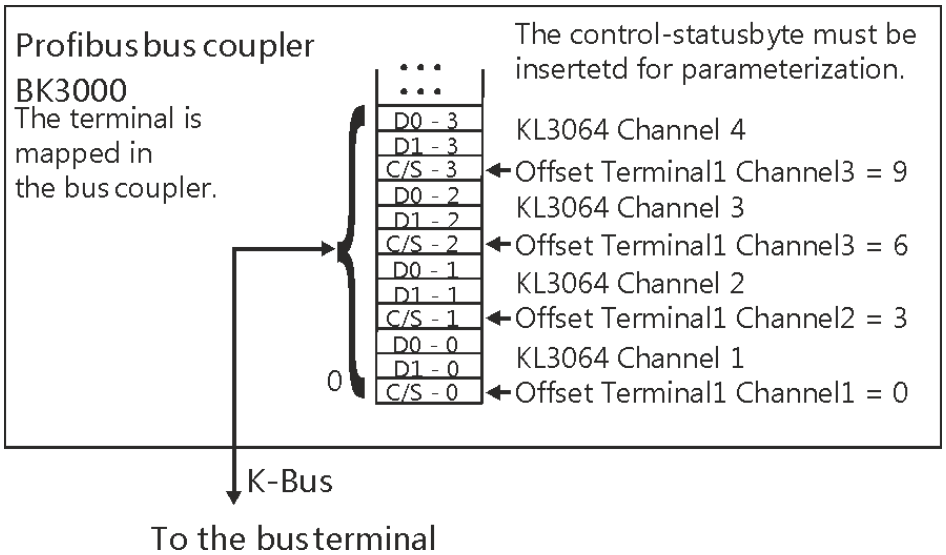

Fig. 22: Mapping in the Profibus coupler – example for KL3064

BK4000 Interbus Coupler

The BK4000 Interbus Coupler maps the KL3064 by default with 8 bytes of input data (2 bytes of user data per channel).

Parameterization via the fieldbus is not possible. If the control and status byte is to be used, the KS2000 configuration software is required.

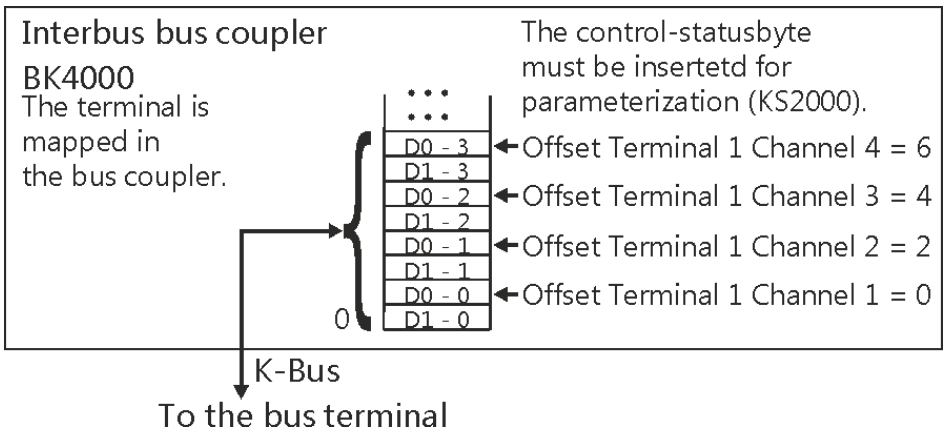

Fig. 23: Mapping in the Interbus coupler – example for KL3064

Other Bus Couplers and further information

Further information about the mapping configuration of Bus Couplers can be found in the Appendix of the respective Bus Coupler manual under *Master configuration*.

The chapter on Mapping in the Bus Coupler contains an overview of possible mapping configurations, depending on the configurable parameters.

Parameterization with KS2000

The KS2000 configuration software can be used for parameterizations via the serial interface of the Bus Coupler, independent of the fieldbus system.

5.3 Mapping in the Bus Coupler

As already described in the *Terminal Configuration* section, each Bus Terminal is mapped in the Bus Coupler. This mapping is usually done with the default setting in the Bus Coupler / Bus Terminal. The KS2000 configuration software or a master configuration software (e.g. ComProfibus or TwinCAT System Manager) can be used to change this default setting.

If the terminals are fully evaluated, they occupy memory space in the input and output process image.

The following tables provide information about how the terminals map themselves in the Bus Coupler, depending on the parameters set.

5.3.1 KL3061

Default mapping for: CANopen, CANCAL, DeviceNet, ControlNet, Modbus, RS232 and RS485 coupler

Conditions	Word offset	High byte	Low byte
Complete evaluation: no Motorola format: no Word alignment: any	0	Ch1 D1	Ch1 D0
	1	-	-
	2	-	-
	3	-	-

Default mapping for: Profibus and Interbus Coupler

Conditions	Word offset	High byte	Low byte
Complete evaluation: no Motorola format: yes Word alignment: any	0	Ch1 D0	Ch1 D1
	1	-	-
	2	-	-
	3	-	-

Conditions	Word offset	High byte	Low byte
Complete evaluation: yes Motorola format: no Word alignment: no	0	Ch1 D0	Ch1 CB/SB
	1	-	Ch1 D1
	2	-	-
	3	-	-

Conditions	Word offset	High byte	Low byte
Complete evaluation: yes Motorola format: yes Word alignment: no	0	Ch1 D1	Ch1 CB/SB
	1	-	Ch1 D0
	2	-	-
	3	-	-

Default mapping for: Lightbus & Ethernet coupler and Bus Terminal Controller (BCxxxx, BXxxxx)

Conditions	Word offset	High byte	Low byte
Complete evaluation: yes Motorola format: no Word alignment: yes	0	Res.	Ch1 CB/SB
	1	Ch1 D1	Ch1 D0
	2	-	-
	3	-	-

Conditions	Word offset	High byte	Low byte
Complete evaluation: yes Motorola format: yes Word alignment: yes	0	Res.	Ch1 CB/SB
	1	Ch1 D0	Ch1 D1
	2	-	-
	3	-	-

Key

Complete evaluation	The terminal is mapped with control and status byte.
Motorola format	Motorola or Intel format can be set.
Word alignment	The terminal is positioned on a word boundary in the Bus Coupler.
Ch n CB	Control byte for channel n (appears in the process image of the outputs).
Ch n SB	Status byte for channel n (appears in the process image of the inputs).
Ch n D0	Channel n, data byte 0 (byte with the lowest value)
Ch n D1	Channel n, data byte 1 (byte with the highest value)
"-"	This byte is not used or occupied by the terminal.
Res.	Reserved: This byte is assigned to the process data memory, although it has no function.

5.3.2 KL3062

Default mapping for: CANopen, CANCAL, DeviceNet, ControlNet, Modbus, RS232 and RS485 coupler

Conditions	Word offset	High byte	Low byte
Complete evaluation: no Motorola format: no Word alignment: any	0	Ch1 D1	Ch1 D0
	1	Ch2 D1	Ch2 D0
	2	-	-
	3	-	-

Default mapping for: Profibus and Interbus Coupler

Conditions	Word offset	High byte	Low byte
Complete evaluation: no Motorola format: yes Word alignment: any	0	Ch1 D0	Ch1 D1
	1	Ch2 D0	Ch2 D1
	2	-	-
	3	-	-

Conditions	Word offset	High byte	Low byte
Complete evaluation: yes Motorola format: no Word alignment: no	0	Ch1 D0	Ch1 CB/SB
	1	Ch2 CB/SB	Ch1 D1
	2	Ch2 D1	Ch2 D0
	3	-	-

Conditions	Word offset	High byte	Low byte
Complete evaluation: yes Motorola format: yes Word alignment: no	0	Ch1 D1	Ch1 CB/SB
	1	Ch2 CB/SB	Ch1 D0
	2	Ch2 D0	Ch2 D1
	3	-	-

Default mapping for: Lightbus & Ethernet coupler and Bus Terminal Controller (BCxxxx, BXxxxx)

Conditions	Word offset	High byte	Low byte
Complete evaluation: yes Motorola format: no Word alignment: yes	0	Res.	Ch1 CB/SB
	1	Ch1 D1	Ch1 D0
	2	Res.	Ch2 CB/SB
	3	Ch2 D1	Ch2 D0

Conditions	Word offset	High byte	Low byte
Complete evaluation: yes Motorola format: yes Word alignment: yes	0	Res.	Ch1 CB/SB
	1	Ch1 D0	Ch1 D1
	2	Res.	Ch2 CB/SB
	3	Ch2 D0	Ch2 D1

Key

Complete evaluation	The terminal is mapped with control and status byte.
Motorola format	Motorola or Intel format can be set.
Word alignment	The terminal is positioned on a word boundary in the Bus Coupler.
Ch n CB	Control byte for channel n (appears in the process image of the outputs).
Ch n SB	Status byte for channel n (appears in the process image of the inputs).
Ch n D0	Channel n, data byte 0 (byte with the lowest value)
Ch n D1	Channel n, data byte 1 (byte with the highest value)
"-"	This byte is not used or occupied by the terminal.
Res.	Reserved: This byte is assigned to the process data memory, although it has no function.

5.3.3 KL3064

The KL3064 is mapped in the Bus Coupler according to the set parameters. If the terminal is completely evaluated, it occupies memory space in the process image of the inputs **and** outputs.

Default mapping for CANopen, CANCAL, DeviceNet, ControlNet, Modbus, RS232 and RS485 coupler

Conditions	Word offset	High byte	Low byte
Complete evaluation: no Motorola format: no Word alignment: any	0	Ch1 D1	Ch1 D0
	1	Ch2 D1	Ch2 D0
	2	Ch3 D1	Ch3 D0
	3	Ch4 D1	Ch4 D0

Default mapping for: Profibus and Interbus Coupler

Conditions	Word offset	High byte	Low byte
Complete evaluation: no Motorola format: yes Word alignment: any	0	Ch1 D0	Ch1 D1
	1	Ch2 D0	Ch2 D1
	2	Ch3 D0	Ch3 D1
	3	Ch4 D0	Ch4 D1

Conditions	Word offset	High byte	Low byte
Complete evaluation: yes Motorola format: no Word alignment: no	0	Ch1 D0	Ch1 CB/SB
	1	Ch2 CB/SB	Ch1 D1
	2	Ch2 D1	Ch2 D0
	3	Ch3 D0	Ch3 CB/SB
	4	Ch4 CB/SB	Ch3 D1
	5	Ch4 D1	Ch4 D0

Conditions	Word offset	High byte	Low byte
Complete evaluation: yes Motorola format: yes Word alignment: no	0	Ch1 D1	Ch1 CB/SB
	1	Ch2 CB/SB	Ch1 D0
	2	Ch2 D0	Ch2 D1
	3	Ch3 D1	Ch3 CB/SB
	4	Ch4 CB/SB	Ch3 D0
	5	Ch4 D0	Ch4 D1

Default mapping for: Lightbus & Ethernet coupler and Bus Terminal Controller (BCxxxx, BXxxxx)

Conditions	Word offset	High byte	Low byte
Complete evaluation: yes Motorola format: no Word alignment: yes	0	Res.	Ch1 CB/SB
	1	Ch1 D1	Ch1 D0
	2	Res.	Ch2 CB/SB
	3	Ch2 D1	Ch2 D0
	4	Res.	Ch3 CB/SB
	5	Ch3 D1	Ch3 D0
	6	Res.	Ch4 CB/SB
	7	Ch4 D1	Ch4 D0

Conditions	Word offset	High byte	Low byte
Complete evaluation: yes Motorola format: yes Word alignment: yes	0	Res.	Ch1 CB/SB
	1	Ch1 D0	Ch1 D1
	2	Res.	Ch2 CB/SB
	3	Ch2 D0	Ch2 D1
	4	Res.	Ch3 CB/SB
	5	Ch3 D0	Ch3 D1
	6	Res.	Ch4 CB/SB
	7	Ch4 D0	Ch4 D1

Key

Complete evaluation	The terminal is mapped with control and status byte.
Motorola format	Motorola or Intel format can be set.
Word alignment	The terminal is positioned on a word boundary in the Bus Coupler.
Ch n CB	Control byte for channel n (appears in the process image of the outputs).
Ch n SB	Status byte for channel n (appears in the process image of the inputs).
Ch n D0	Channel n, data byte 0 (byte with the lowest value)
Ch n D1	Channel n, data byte 1 (byte with the highest value)
Res.	Reserved: This byte is assigned to the process data memory, although it has no function.

5.4 Register overview

These registers exist once for each channel.

Address	Name	Default value	R/W	Storage medium
R0 [▶ 39]	Raw ADC value	variable	R	RAM
R1 to R5	reserved	0x0000	R	
R6 [▶ 39]	Diagnostic register	variable	R	RAM
R7 [▶ 39]	Command register - not used	0x0000	R	
R8 [▶ 39]	Terminal type	e.g. 3062	R	ROM
R9 [▶ 39]	Software version number	0x????	R	ROM
R10 [▶ 39]	Multiplex shift register	0x0218/0130	R	ROM
R11 [▶ 39]	Signal channels	0x0218	R	ROM
R12 [▶ 39]	Minimum data length	0x0098	R	ROM
R13 [▶ 39]	Data structure	0x0000	R	ROM
R14	reserved	0x0000	R	
R15 [▶ 40]	Alignment register	variable	R/W	RAM
R16 [▶ 40]	Hardware version number	0x????	R/W	SEEROM
R17 [▶ 40]	Hardware compensation: Offset	specific	R/W	SEEROM
R18 [▶ 40]	Hardware compensation: Gain	specific	R/W	SEEROM
R19 [▶ 40]	Manufacturer scaling: Offset	0x0000	R/W	SEEROM
R20 [▶ 40]	Manufacturer scaling: Gain	0x2002	R/W	SEEROM
R21 [▶ 40]	Overrange limit	0x0FFF	R/W	SEEROM
R22 [▶ 40]	Under range limit	0x0000	R/W	SEEROM
R23 [▶ 40]	ADC hardware preset	0x0000	R/W	SEEROM
R24 to R30	reserved	0x0000	R/W	SEEROM
R31 [▶ 40]	Code word register	variable	R/W	RAM
R32 [▶ 41]	Feature register	0x01106	R/W	SEEROM
R33 [▶ 41]	User scaling: Offset	0x0000	R/W	SEEROM
R34 [▶ 41]	User scaling: Gain	0x0100	R/W	SEEROM
R35 [▶ 41]	Limit value 1	0x0000	R/W	SEEROM
R36 [▶ 42]	Limit value 2	0x0000	R/W	SEEROM
R37 to R63	reserved	0x0000	R/W	SEEROM

5.5 Register description

The registers can be read or written via the register communication. They are used for the parameterization of the terminal.

R0 to R7: Registers in the internal RAM of the terminal

The process variables can be used in addition to the actual process image. Their function is specific to the terminal.

- **R0 ADC raw value (X_R)**
  This register contains the raw ADC value with gain and offset error
- **R1 to R5: Reserved**
- **R6: Diagnostic register**
  - High byte: reserved
  - Low byte: Status byte
- **R7: Command register**
  High-Byte_Write = function parameter
  Low-Byte_Write = function number
  High-Byte_Read = function result
  Low-Byte_Read = function number

R8 to R15: Registers in the internal ROM of the terminal

The type and system parameters are hard programmed by the manufacturer, and the user can read them but cannot change them.

- **R8: Terminal type**
  The terminal type in register R8 is needed to identify the terminal.
- **R9: Software version (X.y)**
  The software version can be read as a string of ASCII characters.
- **R10: Data length**
  R10 contains the number of multiplexed shift registers and their length in bits.
  The Bus Coupler sees this structure.
- **R11: Signal channels**
  Related to R10, this contains the number of channels that are logically present. Thus for example a shift register that is physically present can perfectly well consist of several signal channels.
- **R12: Minimum data length**
  The particular byte contains the minimum data length for a channel that is to be transferred. If the MSB is set, the control and status byte is not necessarily required for the terminal function and is not transferred to the control, if the Bus Coupler is configured accordingly.
- **R13: Data type register**

Data type register	Meaning
0x00	Terminal with no valid data type
0x01	Byte array
0x02	Structure 1 byte n bytes
0x03	Word array
0x04	Structure 1 byte n words
0x05	Double word array
0x06	Structure 1 byte n double words
0x07	Structure 1 byte 1 double word
0x08	Structure 1 byte 1 double word
0x11	Byte array with variable logical channel length
0x12	Structure 1 byte n bytes with variable logical channel length (e.g. 60xx)
0x13	Word array with variable logical channel length
0x14	Structure 1 byte n words with variable logical channel length
0x15	Double word array with variable logical channel length
0x16	Structure 1 byte n double words with variable logical channel length

- **R14: reserved**

- **R15: Alignment bits (RAM)**
  The alignment bits are used to place the analog terminal in the Bus Coupler on a byte boundary.

R16 to R30: Manufacturer parameter area (SEEROM)

The manufacturer parameters are specific for each type of terminal. They are programmed by the manufacturer, but can also be modified by the controller. The manufacturer parameters are stored in a serial EEPROM in the terminal, and are retained in the event of voltage drop-out.

These registers can only be altered after a code word has been set in R31 [▶ 40].

- **R17: Hardware compensation - offset (B_a)**
  16 bit signed integer
  This register is used for offset compensation of the terminal (Eq. 1.1 [▶ 12]).
  Register value approx. 0xFFXX
- **R18: Hardware compensation - gain (A_a)**
  16 bit signed integer*2^{-12}
  This register is used for gain compensation of the terminal (Eq. 1.1 [▶ 12]).
  Register value approx. 0x11XX
- **R19: Manufacturer scaling - offset (B_h)**
  16 bit signed integer [0x0000]
  This register contains the offset of the manufacturer straight-line equation (equation 1.3 [▶ 12]). The straight-line equation is activated via register R32.
- **R20: Manufacturer scaling - gain (A_h)**
  16 bit signed integer*2^{-10} [0x2002]
  This register contains the scale factor of the manufacturer's equation of the straight line (Eq. 1.3 [▶ 12]).
  The straight-line equation is activated via register R32.
  1 corresponds to register value 0x0400.
- **R21: Over range limit (OVRL)**
  16 bits signed integer in Y_a (Eq. 1.0 [▶ 12]) [0x0FFF]
  This limit value limits the maximum measuring range of the input terminal. If it is exceeded, the associated status bit is set, and the maximum value is displayed.
- **R22: Under range limit (UNRL)**
  16 bit signed integer in Y_a (equation 1.0 [▶ 12]) [0x0000]
  If the actual value falls below this limit, the associated status bit is set, and the minimum value is displayed.
- **R23: ADC hardware preset**
  [0x1000]
  Initialization of the ADC offset register.

R31 to R47: User parameter area (SEEROM)

The user parameters are specific for each type of terminal. They can be modified by the programmer. The user parameters are stored in a serial EEPROM in the terminal, and are retained in the event of voltage drop-out. The user area is write-protected by a code word.

> **• R31: Code word register in RAM**
>
> The code word **0x1235** must be entered here so that parameters in the user area can be modified. If any other value is entered into this register, the write-protection is active. When write protection is not active, the code word is returned when the register is read. If the write protection is active, the register contains a zero value.

- **R32: Feature register**
  [0x1106]
  This register specifies the operation modes of the terminal. Thus, for instance, a user-specific scaling can be activated for the analog I/Os.

Feature bit no.		Description of the operation mode
Bit 0	1	User scaling (R33, R34 [▶ 41]) active [0]
Bit 1	1	Manufacturer scaling (R19, R20 [▶ 40]) active [1]
Bit 2	1	Watchdog timer active [1] In the delivery state, the watchdog timer is switched on.
Bit 3	1	Sign / amount representation [0] Sign / amount representation is active instead of two's-complement representation. (-1 = 0x8001).
Bit 4	1	Siemens output format [0] This bit is used for inserting status information on the lowest 3 bits (see below).
Bits 5 to 7	-	Reserved, don't change
Bit 8	1	Over range Protection [1] If values exceed or fall below the limits of the registers OVRL (R21 [▶ 40]) and UNRL (R22 [▶ 40]), the status bits are set and the measuring range is restricted accordingly.
Bit 9	1	Limit value 1 active [0] The process data are compared with limit value 1 (R35 [▶ 41]), and appropriate status bits are set.
Bit 10	1	Limit value 2 active [0] The process data are compared with limit value 2 (R36 [▶ 42]), and appropriate status bits are set.
Bit 11	1	Filter1 active [0] For filter properties, see R37 [▶ 42]
Bits 12 to 15	-	Reserved, don't change

If the Siemens output format is selected, the lowest three bits are used for status evaluation. The process data is represented in bits 15 to 3, with bit 15 representing the sign bit. Scaling of the measured value according to the Siemens standard has to be done via user scaling (R33, R34 [▶ 41]).

KL3061, KL3062				
Measured value	**Bits 15 to 3**	**Bit 2 X**	**Bit1 Error**	**Bit 0 Overflow**
Measured value > 10 V		0	0	1
Measured value <10 V	Process data	0	0	0

KL3064				
Measured value	**Bits 15 to 3**	**Bit 2 X**	**Bit1 Error**	**Bit 0 Overflow**
		X	ERROR	Overflow
Measured value > 10 V		0	0	1
Measured value <10 V	Process data	0	0	0

- **R33: User scaling - offset (B_w)**
  16 bit signed integer
  This register contains the offset of the user straight-line equation (Eq. 1.4 [▶ 12]). The straight-line equation is activated via register R32 [▶ 41].
- **R34: User scaling - gain (Aw_)**
  16 bit signed integer*2^{-8}
  This register contains the scale factor of the user straight-line equation (Eq. 1.4 [▶ 12]). The straight-line equation is activated via register R32 [▶ 41].
- **R35: Limit value 1 (Y_2)**
  If the process data are outside this threshold, the appropriate bits are set in the status byte.

- **R36: Limit value 2 (Y_2)**
  If the process data are outside this threshold, the appropriate bits are set in the status byte.
- **R37: Filter constant**
  [0x0000]
  If the internal filter is activated via R32.11, you can choose between the following filter constants in R37 (not possible with KL3064). In the standard setting, the corresponding conversion time is 2.5 ms:

Applies to all terminals from firmware version 3x.

This documentation applies to all terminals from firmware version 3x. The version information can be found on the right-hand side of the terminal in the serial number: xxxx3xxx.

Example: 5298**3A**2A => the firmware version is **3A**.

R37	Explanation	
0x0000	2nd order FIR filter	default value
0x0100	1st order IIR filter, cut-off frequency F_g approx.1 kHz	The implemented IIR filters do not have any notch behavior, i.e., they do not explicitly suppress any frequency.
0x0200	1st order IIR filter, cut-off frequency F_g approx. 100 Hz	
0x0300	1st order IIR filter, cut-off frequency F_g approx. 50 Hz	
0x0400	1st order IIR filter, cut-off frequency F_g approx. 20 Hz	
0x0500	1st order IIR filter, cut-off frequency F_g approx. 10 Hz	
0x0600	1st order IIR filter, cut-off frequency F_g approx. 5 Hz	
0x0700	1st order IIR filter, cut-off frequency F_g approx. 1 Hz	
0x1000	50 Hz FIR filter Averaging over 16 values and first notch 25 Hz	In contrast to the IIR filters, FIR filter have notch behavior. The timer settings of the notch filter are made via channel 0 of the terminal. This means that the 50 Hz filter on channel 0 and the 60 Hz filter on channel 1 cannot be active simultaneously.
0x2000	60 Hz FIR filter Averaging over 16 values and first notch 20 Hz	
Other values	No filter active	

5.6 Control and status byte

The control and status byte is transmitted from the controller to the terminal. It can be used

- in register mode [▶ 44] (REG = 1_{bin}) or
- in process data exchange [▶ 42] (REG = 0_{bin}).

5.6.1 Process data exchange

Control byte in process data exchange (REG=0)

A gain and offset calibration of the terminal can be carried out with the control byte. The code word must be entered in R31 so that the terminal calibration can be carried out. The gain and offset of the terminal can then be calibrated. The parameter will only be saved permanently once the code word is reset!

Bit	Description
Bit 7	0_{bin}
Bit 6	1_{bin}: Terminal compensation function is enabled
Bit 5	reserved
Bit 4	1_{bin}: Gain calibration
Bit 3	1_{bin}: Offset calibration
Bit 2	0_{bin}: slower cycle = 1000 ms 1_{bin}: fast cycle = 50 ms
Bit 1	1_{bin}: up
Bit 0	1_{bin}: down

Status byte in process data exchange (REG=0)

The status byte is transferred from the terminal to the controller. The status byte contains various status bits for the analog input channel:

Bit	Description		
Bit 7	0_{bin}		
Bit 6	1_{bin}: Error (general error bit)		
	Bit 5	**Bit 4**	
	0_{bin}	0_{bin}	Limit value 2 not enabled
	0_{bin}	1_{bin}	Process data < limit value 2
	1_{bin}	0_{bin}	Process data > limit value 2
	1_{bin}	1_{bin}	Process data = limit value 2
	Bit 3	**Bit 2**	
	0_{bin}	0_{bin}	Limit value 1 not enabled
	0_{bin}	1_{bin}	Process data < limit value 1
	1_{bin}	0_{bin}	Process data > limit value 1
	1_{bin}	1_{bin}	Process data = limit value 1
Bit 1	1_{bin}: Overrange		
Bit 0	1_{bin}: Underrange		

5.6.2 Register communication

Register access via process data exchange

- **Bit 7=1: Register mode**
  If bit 7 of the control byte is set, the first two bytes of the user data are not used for process data exchange but written into the register set of the terminal or read from it.
- **Bit 6=0: read, bit 6=1: write**
  Bit 6 of the control bytes is used to specify whether a register should be read or written.
  - **Bit 6=0:** A register is read without changing it. The value can be found in the input process image.
  - **Bit 6=1:** The user data are written into a register. The process is complete once the status byte in the input process image has returned an acknowledgment (see example).
- **Bit 0 to 5: Address**
  The address of the register to be addressed is entered in bits 0 to 5 of the control byte.

Control byte in register mode (REG=1)

MSB

REG=1	**W/R**	**A5**	**A4**	**A3**	**A2**	**A1**	**A0**

REG = 0_{bin}: Process data exchange
REG = 1_{bin}: Access to register structure

W/R = 0_{bin}: Read register
W/R = 1_{bin}: Write register

A5..A0 = register address
Addresses A5...A0 can be used to address a total of 64 registers.

Example register communication

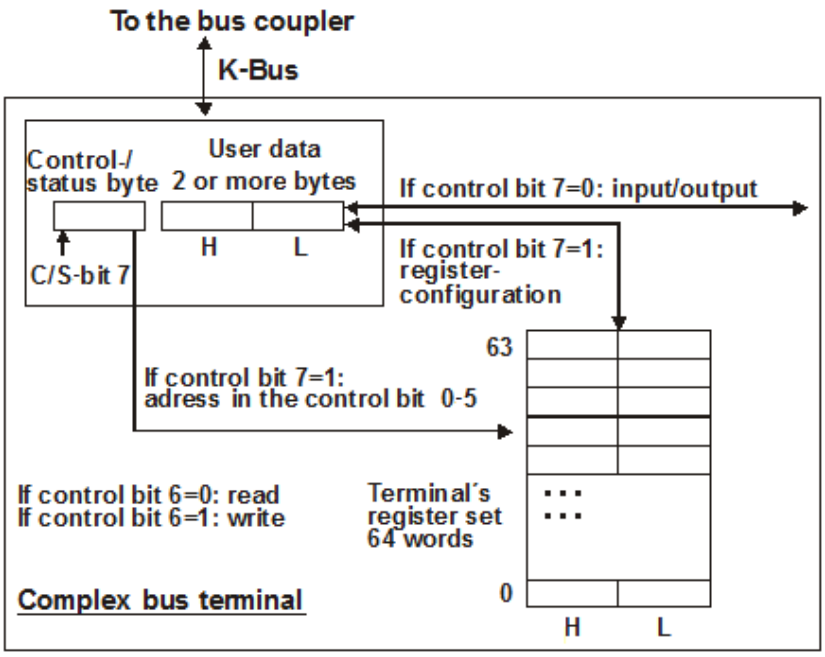

Fig. 24: Register mode control byte

The control or status byte occupies the lowest address of a logical channel. The corresponding register values are located in the following 2 data bytes. (The BK2000 is an exception: here, an unused data byte is inserted after the control or status byte, and the register value is therefore placed on a word boundary).

Example 1:
Reading of register 8 in the BK2000 with a KL3062 and the end terminal:

If the following bytes are transferred from the control to the terminal,

Byte	Byte 3	Byte 2	Byte 1	Byte 0
Name	DataOUT 1	DataOUT 0	Not used	Control byte
Value	0xXX	0xXX	0xXX	0x88

The terminal returns the following type identifier (0x0BF6 corresponds to unsigned integer 3062).

Byte	Byte 3	Byte 2	Byte 1	Byte 0
Name	DataIN 1	DataIN 0	Not used	Status byte
Value	0x0B	0xF6	0x00	0x88

Example 2:
Writing of register 31 in the BK2000 with an intelligent terminal and the end terminal:

If the following bytes (code word) are transferred from the control to the terminal,

Byte	Byte 3	Byte 2	Byte 1	Byte 0
Name	DataOUT 1	DataOUT 0	Not used	Control byte
Value	0x12	0x35	0xXX	0xDF

the code word is set, and the terminal returns the register address with bit 7 for register access as acknowledgment.

Byte	Byte 3	Byte 2	Byte 1	Byte 0
Name	DataIN 1	DataIN 0	Not used	Status byte
Value	0x00	0x00	0x00	0x9F

5.7 Examples of Register Communication

The numbering of the bytes in the examples corresponds to the display without word alignment.

5.7.1 Example 1: reading the firmware version from Register 9

Output Data

Byte 0: Control byte	**Byte 1: DataOUT1, high byte**	**Byte 2: DataOUT1, low byte**
0x89 (1000 1001_{bin})	0xXX	0xXX

Explanation:

- Bit 0.7 set means: Register communication switched on.
- Bit 0.6 not set means: reading the register.
- Bits 0.5 to 0.0 specify the register number 9 with 00 1001_{bin}.
- The output data word (byte 1 and byte 2) has no meaning during read access. To change a register, write the required value into the output word.

Input Data (answer of the bus terminal)

Byte 0: Status byte	**Byte 1: DataIN1, high byte**	**Byte 2: DataIN1, low byte**
0x89	0x33	0x41

Explanation:

- The terminal returns the value of the control byte as a receipt in the status byte.
- The terminal returns the firmware version 0x3341 in the input data word (byte 1 and byte 2). This is to be interpreted as an ASCII code:
  - ASCII code 0x33 represents the digit 3
  - ASCII code 0x41 represents the letter A
    The firmware version is thus 3A.

5.7.2 Example 2: Writing to an user register

Code word

In normal mode all user registers are read-only with the exception of Register 31. In order to deactivate this write protection you must write the code word (0x1235) into Register 31. If a value other than 0x1235 is written into Register 31, write protection is reactivated. Please note that changes to a register only become effective after restarting the terminal (power-off/power-on).

I. Write the code word (0x1235) into Register 31.

Output Data

Byte 0: Control byte	Byte 1: DataOUT1, high byte	Byte 2: DataOUT1, low byte
0xDF (1101 1111_{bin})	0x12	0x35

Explanation:

- Bit 0.7 set means: Register communication switched on.
- Bit 0.6 set means: writing to the register.
- Bits 0.5 to 0.0 specify the register number 31 with 01 1111_{bin}.
- The output data word (byte 1 and byte 2) contains the code word (0x1235) for deactivating write protection.

Input Data (answer of the bus terminal)

Byte 0: Status byte	Byte 1: DataIN1, high byte	Byte 2: DataIN1, low byte
0x9F (1001 1111_{bin})	0xXX	0xXX

Explanation:

- The terminal returns a value as a receipt in the status byte that differs only in bit 0.6 from the value of the control byte.
- The input data word (byte 1 and byte 2) is of no importance after the write access. Any values still displayed are invalid!

II. Read Register 31 (check the set code word)

Output Data

Byte 0: Control byte	Byte 1: DataOUT1, high byte	Byte 2: DataOUT1, low byte
0x9F (1001 1111_{bin})	0xXX	0xXX

Explanation:

- Bit 0.7 set means: Register communication switched on.
- Bit 0.6 not set means: reading the register.
- Bits 0.5 to 0.0 specify the register number 31 with 01 1111_{bin}.
- The output data word (byte 1 and byte 2) has no meaning during read access.

Input Data (answer of the bus terminal)

Byte 0: Status byte	Byte 1: DataIN1, high byte	Byte 2: DataIN1, low byte
0x9F (1001 1111_{bin})	0x12	0x35

Explanation:

- The terminal returns the value of the control byte as a receipt in the status byte.
- The terminal returns the current value of the code word register in the input data word (byte 1 and byte 2).

III. Write to Register 32 (change contents of the feature register)

Output data

Byte 0: Control byte	Byte 1: DataIN1, high byte	Byte 2: DataIN1, low byte
0xE0 (1110 0000_{bin})	0x00	0x02

Explanation:

- Bit 0.7 set means: Register communication switched on.
- Bit 0.6 set means: writing to the register.
- Bits 0.5 to 0.0 indicate register number 32 with 10 0000_{bin}.
- The output data word (byte 1 and byte 2) contains the new value for the feature register.

⚠ CAUTION

Observe the register description!

The value of 0x0002 given here is just an example!
The bits of the feature register change the properties of the terminal and have a different meaning, depending on the type of terminal. Refer to the description of the feature register of your terminal (chapter *Register description*) regarding the meaning of the individual bits before changing the values.

Input data (response from the Bus Terminal)

Byte 0: Status byte	Byte 1: DataIN1, high byte	Byte 2: DataIN1, low byte
0xA0 (1010 0000_{bin})	0xXX	0xXX

Explanation:

- The terminal returns a value as a receipt in the status byte that differs only in bit 0.6 from the value of the control byte.
- The input data word (byte 1 and byte 2) is of no importance after the write access. Any values still displayed are invalid!

IV. Read Register 32 (check changed feature register)

Output Data

Byte 0: Control byte	Byte 1: DataOUT1, high byte	Byte 2: DataOUT1, low byte
0xA0 (1010 0000_{bin})	0xXX	0xXX

Explanation:

- Bit 0.7 set means: Register communication switched on.
- Bit 0.6 not set means: reading the register.
- Bits 0.5 to 0.0 indicate register number 32 with 10 0000_{bin}.
- The output data word (byte 1 and byte 2) has no meaning during read access.

Input Data (answer of the bus terminal)

Byte 0: Status byte	Byte 1: DataIN1, high byte	Byte 2: DataIN1, low byte
0xA0 (1010 0000_{bin})	0x00	0x02

Explanation:

- The terminal returns the value of the control byte as a receipt in the status byte.
- The terminal returns the current value of the feature register in the input data word (byte 1 and byte 2).

V. Write Register 31 (reset code word)

Output Data

Byte 0: Control byte	Byte 1: DataOUT1, high byte	Byte 2: DataOUT1, low byte
0xDF (1101 1111_{bin})	0x00	0x00

Explanation:

- Bit 0.7 set means: Register communication switched on.
- Bit 0.6 set means: writing to the register.
- Bits 0.5 to 0.0 specify the register number 31 with 01 1111_{bin}.
- The output data word (byte 1 and byte 2) contains 0x0000 for reactivating write protection.

Input Data (answer of the bus terminal)

Byte 0: Status byte	Byte 1: DataIN1, high byte	Byte 2: DataIN1, low byte
0x9F (1001 1111_{bin})	0xXX	0xXX

Explanation:

- The terminal returns a value as a receipt in the status byte that differs only in bit 0.6 from the value of the control byte.
- The input data word (byte 1 and byte 2) is of no importance after the write access. Any values still displayed are invalid!

6 Appendix

6.1 Support and Service

Beckhoff and their partners around the world offer comprehensive support and service, making available fast and competent assistance with all questions related to Beckhoff products and system solutions.

Beckhoff's branch offices and representatives

Please contact your Beckhoff branch office or representative for local support and service on Beckhoff products!

The addresses of Beckhoff's branch offices and representatives round the world can be found on her internet pages:

http://www.beckhoff.com

You will also find further documentation for Beckhoff components there.

Castel Maggiore (BO) 40013
Via Lirone 60/i

e-mail: info@eurotecsrl.com
Tel: +39 051/6321595
Website: www.eurotecsrl.com

C.F.: 04103780377
P.I.: 01596581205