ABB MEASUREMENT & ANALYTICS | DATA SHEET

# TTH200

## Head-mount temperature transmitter

# Measurement made easy

Temperature transmitter for HART protocol.
Suitable for all standard requirements.

## Input circuit and communication

- Universal sensor input for resistance thermometers (RTD) and thermocouples
- Communication via a 4 to 20 mA signal and the HART protocol.

## Safety

- Global approvals for explosion protection up to Zone 0
- Functional safety SIL 2 / SIL 3 in accordance with IEC 61508
- Device versioning in accordance with NE 53
- Continuous monitoring of supply voltage
- Wire break / corrosion monitoring in accordance with NE 89

## Use

- Configuration in accordance with the FDT / DTM, EDD or FDI standard (FIM)
- Turnable LCD indicator for optimal readability (option)

# Specification

**CE marking**
The device fulfills all requirements for CE marking in accordance with all applicable guidelines.

**Electrical isolation**
3.5 kV DC (approx. 2.5 kV AC), 60 s, input to output

**MTBF time**
190 years at 40 °C (104 °F) mean ambient temperature

**Input filter**
50 / 60 Hz

**Switch-on delay**
< 10 s ($I_a$ ≤ 3.6 mA during switch-on cycle)

**Warm-up time**
5 minutes

**Rise time t90**
400 to 1000 ms

**Measured value update**
10/s, independent of sensor type and sensor circuit

**Output filter**
Digital filter 1st order: 0 to 100 s

**Weight**
- 50 g

**Material**
- Housing: polycarbonate
- Color: gray RAL9002
- Encapsulation resin: polyurethane (PUR), WEVO PU-417

**Installation conditions**
Mounting position: no restrictions
Installation options:
- Connection heads in accordance with DIN 43729 Form B
- Rail mounting (35 mm) in accordance with EN 60175 by means of latching base
- Field mount housing

**Electrical connection**
- Terminals with captive stainless steel screws, including soldering tags
- Lines up to a maximum of 1.5 $mm^2$ (AWG 16)
- Connection for handheld terminal

**Dimensions**
Refer to **Dimensions** on page 12.

## Ambient conditions

**Ambient temperature**
- Standard: −40 to 85 °C (−40 to 185 °F)
- Restricted range during operation with LCD-indicator: −20 to 70 °C (−4 to 158 °F)
- Restricted range during operation with explosion-proof design: see corresponding certificate

**Transport- / Storage temperature**
−50 to 85 °C (−58 to 185 °F)

**Climate class in accordance with DIN EN 60654-1**
Cx −40 to 85 °C (−40 to 185 °F) at 5 to 95 % relative air humidity

**Max. permissible humidity in accordance with IEC 60068-2-30**
100 % relative air humidity

**Vibration resistance in accordance with IEC 60068-2-6**
10 to 2000 Hz at 5 g, during operation and transport

**Shock resistance in accordance with IEC 68-2-27)**
gn = 30, during operation and transport

**IP rating**
- Power supply circuit: IP 20
- Measurement current circuit: IP 00 or IP-rating of installation housing

# ... Specification

## Electromagnetic compatibility

Emitted interference in accordance with IEC EN 61326 and Namur NE 21.

Interference-resistant in accordance with IEC 61326 and Namur NE 21.
Pt100: measuring range 0 to 100 °C (32 to 212 °F), span 100 K

| Type of test | Testing accuracy | Effect |
|---|---|---|
| Burst to signal- / data lines | 2 kV | < 0.5 % |
| Static discharge | | |
| • Contact plate (indirect) | 8 kV | No |
| • Supply terminals* | 6 kV | No |
| • Sensor terminals* | 4 kV | No |
| Radiated field | | |
| 80 MHz to 2 GHz | 10 V/m | < 0.5 % |
| Coupling | | |
| 150 kHz to 80 MHz | 10 V | < 0.5 % |
| Surge | | |
| between the supply lines | 0.5 kV | No malfunction |
| Line to ground | 1 kV | |

* Air discharge (at 1 mm (0.04 in) distance)

## SIL functional safety

With conformity according to IEC 61508 for the use in safety relevant applications up to and including SIL 3 (redundant).

- In the use of one transmitter the device fulfills the requirements according to SIL 2.
- In the use of redundant handled transmitters the requirements can be fulfilled according to SIL 3.

Instructions on this can be found in the SIL-Safety Manual.

## Type AS LC display

Can only be ordered in conjunction with temperature transmitter.

**CE marking**
The type AS LCD indicator fulfills all requirements for CE marking in accordance with all applicable guidelines.

**Properties**
Transmitter-controlled graphic (alphanumeric) LCD display without configuration function

- Character height, mode-dependent
- Sign, 4 digits, 2 decimal places
- Turnable in 12 increments of 30° each

**Display options**

- Process value sensor
- Bargraph
- Output %

Display diagnostic information related to transmitter and sensor status

**Specification**
**Temperature range**

- −20 to 70 °C (−4 to 158 °F)

Restricted display function (contrast, reaction time) in the temperature ranges:

- -40 to −20 °C (-40 to −4 °F)
  or
- 70 to 85 °C (158 to 185 °F)

**Humidity**

- 0 to 100 %, condensation permitted

**Figure 1: Type AS LCD indicator**

## Input - resistance thermometer / resistances

**Resistance thermometer**
- Pt100 in accordance with IEC 60751, JIS C1604, MIL-T-24388
- Ni in accordance with DIN 43760
- Cu in accordance with recommendation OIML R 84

**Resistance measurement**
- 0 to 500 Ω
- 0 to 5000 Ω

**Sensor connection type**
Two-, three-, four-wire circuit

**Connection lead**
- Maximum sensor line resistance
  per line 50 Ω in accordance with NE 89
- Three-wire circuit:
  Symmetrical sensor line resistances
- Two-wire circuit:
  Compensation up to 100 Ω total lead resistance

**Measurement current**
< 300 µA

**Sensor short circuit**
< 5 Ω (for resistance thermometer)

**Sensor wire break**
- Measuring range: 0 to 500 Ω > 0.6 to 10 kΩ
- Measuring range: 0 to 5 Ω > 5.3 to 10 kΩ

**Corrosion detection in accordance with NE 89**
- Three-wire resistance measurement > 50 Ω
- Four-wire resistance measurement > 50 Ω

**Sensor error signaling**
- Resistance thermometer:
  Sensor short circuit and sensor wire break
- Linear resistance measurement:
  Sensor wire break

## Input - thermocouples / voltages

**Types**
- B, E, J, K, N, R, S, T in accordance with IEC 60584
- U, L in accordance with DIN 43710
- C, D in accordance with ASTM E-988

**Voltages**
- −125 to 125 mV
- −125 to 1100 mV

**Connection lead**
- Maximum sensor line resistance:
  per line 1.5 kΩ, total 3 kΩ

**Sensor wire break monitoring in accordance with NE 89**
- Pulsed with 1 µA outside measurement interval
- Thermocouple measurement 5.3 to 10 kΩ
- Voltage measurement 5.3 to 10 kΩ

**Input resistance**
> 10 MΩ

**Internal reference junction Pt1000, IEC 60751 Cl. B**
(no additional jumpers necessary)

**Sensor error signaling**
- Thermocouple:
  Sensor wire break
- Linear voltage measurement:
  Sensor wire break

## Output

**Transmission characteristics**
- Temperature linear
- Resistance linear
- Voltage linear

**Output signal**
- Configurable 4 to 20 mA (standard)
- Configurable 20 to 4 mA
  (Dynamic range: 3.8 to 20.5 mA in accordance with NE 43)

**Simulation mode**
3.5 to 23.6 mA

**Induced current consumption**
< 3.5 mA

**Maximum output current**
23.6 mA

**Configurable error current signal**
- Overrange 22 mA (20.0 to 23.6 mA)
- Underrange 3.6 mA (3.5 to 4.0 mA)

# ... Specification

## Power supply

Two-wire technology, polarity safe; power supply lines = signal lines

**Note**
Following calculations apply for standard applications. This should be taken into consideration when working with a higher maximum current.

**Input terminal voltage**
Non-Ex application:
$U_S$ = 11 to 42 V DC
Ex applications:
$U_S$ = 11 to 30 V DC

**Maximum permissible residual ripple for input terminal voltage**
During communication, this is in accordance with the HART® FSK 'Physical Layer' specification.

**Undervoltage detection on the transmitter**
If the terminal voltage on the transmitter down-scales a value of 10 V, this may lead to an output current of $I_a \leq 3.6$ mA.

**Maximum load**
$R_B = (U_S - 11\ V) / 0.022\ A$

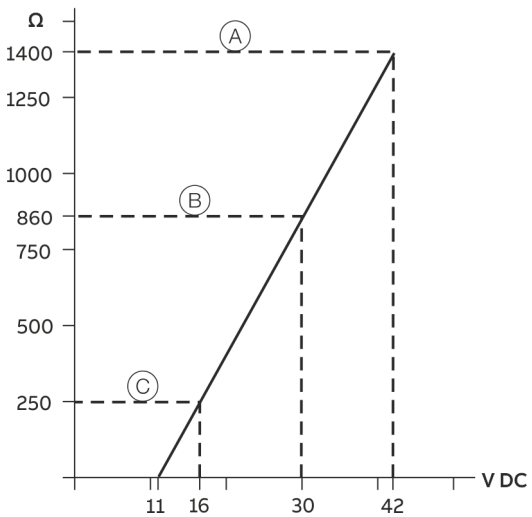


(A) TTH200
(B) TTH200 in Ex-applications
(C) HART® communication resistance ($R_B$)

**Figure 2: Maximum load depending on input terminal voltage**

**Maximum power**
- $P = U_s \times 0.022\ A$
- Example: $U_s = 24\ V \rightarrow P_{max} = 0.528\ W$

## Measuring accuracy

Includes linearity error, repeatability / hysteresis at 23 °C (73.4 °F) ±5 K and 20 V supply voltage.
Information on measuring accuracy corresponds to 3 σ (Gaussian distribution).
Long-term drift: ±0.05 °C (±0.09 °F) or ±0.05 %* per year, the larger value applies.

| Sensor | | Measuring range limit | Minimum span | Measuring accuracy | |
|---|---|---|---|---|---|
| | | | | Input (24-bit AD-converter) | Analog output* (16-bit DA-converter) |
| **Resistance thermometer / resistor** | | | | | |
| DIN IEC 60751 | Pt10 (a=0.003850) | −200 to 850 °C (−328 to 1562 °F) | 10 °C (18 °F) | ±0.80 °C (±1.44 °F) | ±0.05 % |
| | Pt50 (a=0.003850) | | | ±0.16 °C (±0.29 °F) | ±0.05 % |
| | Pt100 (a=0.003850)** | | | ±0.08 °C (±0.14 °F) | ±0.05 % |
| | Pt200 (a=0.003850) | | | ±0.24 °C (±0.43 °F) | ±0.05 % |
| | Pt500 (a=0.003850) | | | ±0.16 °C (±0.29 °F) | ±0.05 % |
| | Pt1000 (a=0.003850) | | | ±0.08 °C (±0.14 °F) | ±0.05 % |
| JIS C1604 | Pt10 (a=0.003916) | −200 to 645 °C (−328 to 1193 °F) | 10 °C (18 °F) | ±0.80 °C (±1.44 °F) | ±0.05 % |
| | Pt50 (a=0.003916) | | | ±0.16 °C (±0.29 °F) | ±0.05 % |
| | Pt100 (a=0.003916) | | | ±0.08 °C (±0.14 °F) | ±0.05 % |
| MIL-T-24388 | Pt10 (a=0.003920) | −200 to 850 °C (−328 to 1562 °F) | 10 °C (18 °F) | ±0.80 °C (±1.44 °F) | ±0.05 % |
| | Pt50 (a=0.003920) | | | ±0.16 °C (±0.29 °F) | ±0.05 % |
| | Pt100 (a=0.003920) | | | ±0.08 °C (±0.14 °F) | ±0.05 % |
| | Pt200 (a=0.003920) | | | ±0.24 °C (±0.43 °F) | ±0.05 % |
| | Pt1000 (a=0.003920) | | | ±0.08 °C (±0.14 °F) | ±0.05 % |
| DIN 43760 | Ni50 (a=0.006180) | −60 to 250 °C (−76 to 482 °F) | 10 °C (18 °F) | ±0.16 °C (±0.29 °F) | ±0.05 % |
| | Ni100 (a=0.006180) | | | ±0.08 °C (±0.14 °F) | ±0.05 % |
| | Ni120 (a=0.006180) | | | | ±0.05 % |
| | Ni1000 (a=0.006180) | | | | ±0.05 % |
| OIML R 84 | Cu10 (a=0.004270) | −50 to 200 °C (−58 to 392 °F) | 10 °C (18 °F) | ±0.80 °C (±1.44 °F) | ±0.05 % |
| | Cu100 (a=0.004270) | | | ±0.08 °C (±0.14 °F) | ±0.05 % |
| | Resistance measurement | 0 to 500 Ω | 4 Ω | ±32 mΩ | ±0.05 % |
| | | 0 to 5000 Ω | 40 Ω | ±320 mΩ | ±0.05 % |

* Percentages refer to the configured measuring span

** Standard Version

# ... Specification

| Sensor | | Measuring range limit | Minimum span | Measuring accuracy | |
|---|---|---|---|---|---|
| | | | | Input (24-bit AD-converter) | Analog output* (16-bit DA-converter) |
| **Thermocouples** ** **/ voltages** | | | | | |
| IEC 60584 | Type K (Ni10Cr-Ni5) | −270 to 1372 °C (−454 to 2502 °F) | 50 °C (90 °F) | ±0.35 °C (±0.63 °F) | ±0.05 % |
| | Type J (Fe-Cu45Ni) | −210 to 1200 °C (−346 to 2192 °F) | | | ±0.05 % |
| | Type N (Ni14CrSi-NiSi) | −270 to 1300 °C (−454 to 2372 °F) | | | ±0.05 % |
| | Type T (Cu-Cu45Ni) | −270 to 400 °C (−454 to 752 °F) | | | ±0.05 % |
| | Type E (Ni10Cr-Cu45Ni) | −270 to 1000 °C (−454 to 1832 °F) | | | ±0.05 % |
| | Type R (Pt13Rh-Pt) | −50 to 1768 °C (−58 to 3215 °F) | 100 °C (180 °F) | ±0.95 °C (±1.71 °F) | ±0.05 % |
| | Type S (Pt10Rh-Pt) | | | | ±0.05 % |
| | Type B (Pt30Rh-Pt6Rh) | −0 to 1820 °C (32 to 3308 °F) | | | ±0.05 % |
| DIN 43710 | Type L (Fe-CuNi) | −200 to 900 °C (−328 to 1652 °F) | 50 °C (90 °F) | ±0.35 °C (±0.63 °F) | ±0.05 % |
| | Type U (Cu-CuNi) | −200 to 600 °C (−328 to 1112 °F) | | | ±0.05 % |
| ASTM E 988 | Type C | −0 to 2315 °C (32 to 4200 °F) | 100 °C (180 °F) | ±1.35 °C (±2.43 °F) | ±0.05 % |
| | Type D | | | | ±0.05 % |
| | Voltage measurement | −125 to 125 mV | 2 mV | ± 12 µV | ±0.05 % |
| | | −125 to 1100 mV | 20 mV | ± 120 µV | ±0.05 % |

* Percentages refer to the configured measuring span

** For digital measuring accuracy, the internal reference junction error must be added: Pt1000, DIN IEC 60751 Cl. B

## Operating influence

The percentages refer to the configured measuring span.

Input terminal voltage effect / load effect:
Within the specified limit values for the voltage / load, the total influence is less than 0.001 % per volt.

Common-mode interference
No influence up to 100 $V_{eff}$ (50 Hz) or 50 VDC

Ambient temperature influence:
Based on 23 °C (73.4 °F) for ambient temperature range −40 to 85 °C (−40 to 185 °F)

| **Sensor** | | **Ambient temperature effect per 1 °C (1.8 °F) deviation from 23 °C (73.4 °F)** | |
|---|---|---|---|
| | | **Input (24 bit AD-converter)** | **Analog output* (16 bit DA-converter)** |
| **Resistance thermometer for two-, three- and four-wire circuits** | | | |
| IEC, JIS, MIL | Pt10 | ±0,04 °C (±0.072 °F) | ±0.003 % |
| | Pt50 | ±0.008 °C (±0.014 °F) | ±0.003 % |
| | Pt100 | ±0.004 °C (±0.007 °F) | ±0.003 % |
| IEC, MIL | Pt200 | ±0.02 °C (±0.036 °F) | ±0.003 % |
| | Pt500 | ±0.008 °C (±0.014 °F) | ±0.003 % |
| | Pt1000 | ±0.004 °C (±0.007 °F) | ±0.003 % |
| DIN 43760 | Ni50 | ±0.008 °C (±0.014 °F) | ±0.003 % |
| | Ni100 | ±0.004 °C (±0.007 °F) | ±0.003 % |
| | Ni120 | ±0.003 °C (±0.005 °F) | ±0.003 % |
| | Ni1000 | ±0.004 °C (±0.007 °F) | ±0.003 % |
| OIML R 84 | Cu10 | ±0,04 °C (±0.072 °F) | ±0.003 % |
| | Cu100 | ±0.004 °C (±0.007 °F) | ±0.003 % |
| **Resistance measurement** | | | |
| | 0 to 500 Ω | ±0.002 Ω | ±0.003 % |
| | 0 to 5000 Ω | ±0.02 Ω | ±0.003 % |
| **Thermocouple, for all defined types** | | | ±0.003 % |
| | ±[(0.001 % x (ME[mV] / MS[mv]) + (100 % x (0.009 °C / MS [°C])]** | | ±0.003 % |
| **Voltage measurement** | | | |
| | −125 to 125 mV | ±15 µV | ±0.003 % |
| | −125 to 1100 mV | ±15 µV | ±0.003 % |

* Percentages refer to the configured measuring span of the analog output signal

** ME = voltage value of the thermocouple at the upper range value in accordance with the standard
MA = voltage value of the thermocouple at the lower range value in accordance with the standard
MS = voltage value of the thermocouple over the measuring span in accordance with the standard. MS = (ME - MA)

# Electrical connections

## Pin assignment

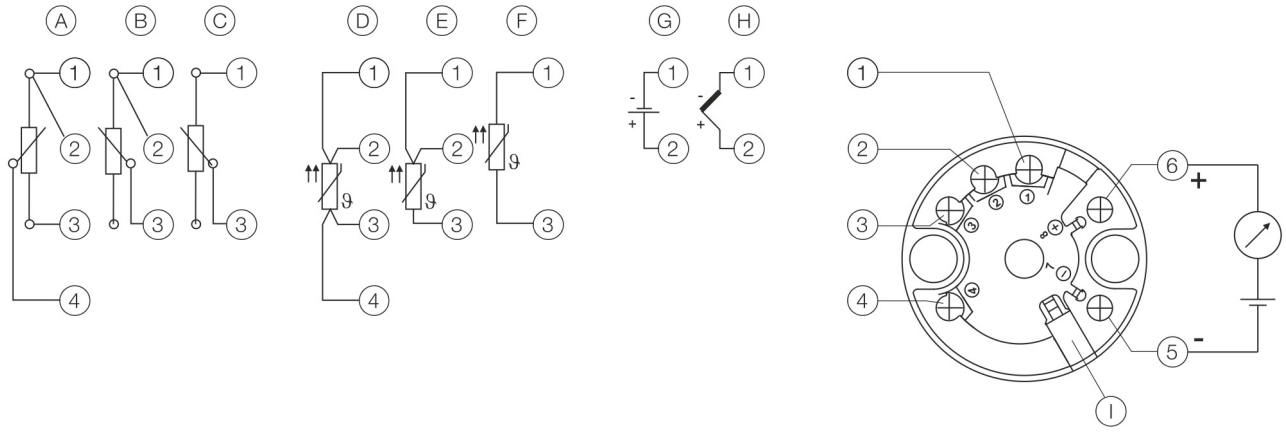


(A) Potentiometer, four-wire circuit
(B) Potentiometer, three-wire circuit
(C) Potentiometer, two-wire circuit
(D) RTD, four-wire circuit
(E) RTD, three-wire circuit
(F) RTD, two-wire circuit
(G) Voltage measurement
(H) Thermocouple
(I) Interface for type AS LCD indicator
(1) to (4) Sensor connection (of measuring inset)
(5) to (6) 4 to 20 mA HART

**Figure 3: TTH200 connections**

# Communication

## Configuration parameters

**Measurement type**
- Sensor type, connection type
- Error signaling
- Measuring range
- General information, e.g. TAG number
- Damping
- Output signal simulation

For details, see **Order form configuration** on page 18.

**Write protection**
Software write protection

**Diagnostic information in accordance with NE 107**
- Sensor error signalling (wire break or short-circuit)
- Device error
- Limit value up- / down-scaled
- Upper range up- / down-scaled
- Simulation active

## HART® Communication

The device is listed with the FieldComm Group.

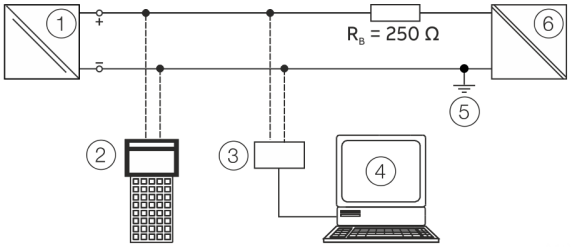


1 Transmitter
2 Handheld terminal
3 HART® modem
4 PC with Asset Management Tool
5 Grounding (optional)
6 Power supply unit (process interface)
$R_B$ load resistance (if necessary)

**Figure 4: Example for HART connection**

| | |
|---|---|
| Manufacturer ID | 0x1A |
| Device Type ID | 0x0D |
| Profile | HART® 5.1 |
| Configuration | DTM, EDD, FDI (FIM) |
| Transmission signal | BELL Standard 202 |

**Operating modes**
- Point-to-point communication mode – standard (general address 0)
- Multidrop mode (addressing 1 to 15)
- Burst Mode

**Configuration options / Tools**
- Device management / Asset management tools
- FDT Technology – via TTX200-DTM driver (Asset Vision Basic / DAT200)
- EDD – via TTX200 EDD driver (handheld terminal, Field Information Manager / FIM)
- FDI Technology – via TTX200 Package (Field Information Manager / FIM)

**Diagnosis notice**
- Overrange / underrange in accordance with NE 43
- HART® diagnosis

# Dimensions

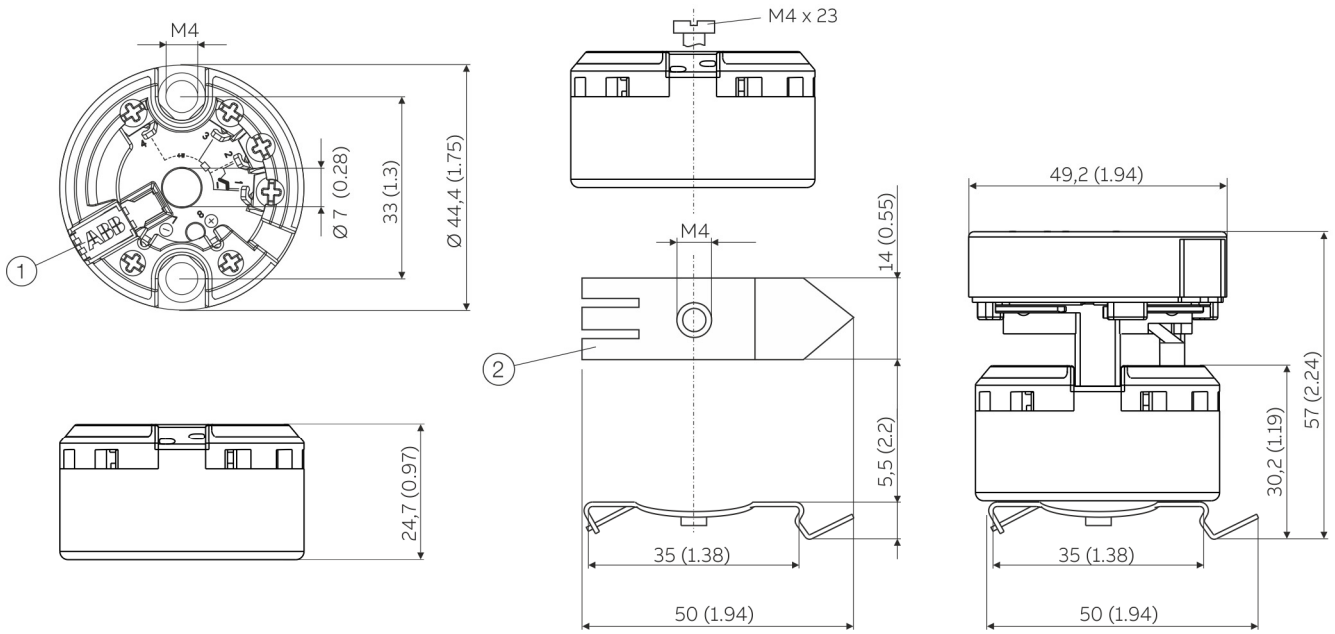


1 Interface for Type AS LCD indicator (not suited for type A LCD indicator)

2 Latching base for 35 mm (1.38 in) rail mount in accordance with EN 60175

**Figure 5: Dimensions in mm (in)**

# Use in potentially explosive atmospheres in accordance with ATEX and IECEx

**Note**

- Further information on the approval of devices for use in potentially explosive atmospheres can be found in the explosion protection test certificates (at www.abb.com/temperature).
- Depending on the design, a specific marking in accordance with ATEX or IECEx applies.

## Ex marking

### Transmitter

**ATEX intrinsic safety**

The device fulfills the requirements of Directive 2014/34/EU in case of corresponding purchase orders and is approved for use in Zone 0, 1 and 2.

| **Model TTH200-E1** | |
|---|---|
| Type Examination Test Certificate | PTB 05 ATEX 2017 X |
| II 1 G | Ex ia IIC T6 Ga |
| II 2 (1) G | Ex [ia IIC Ga] ib IIC T6 Gb |
| II 2 G (1D) | Ex [ia IIIC Da] ib IIC T6 Gb |

**Non-sparking ATEX**

The device fulfills the requirements of Directive 2014/34/EU in case of corresponding purchase orders and is approved for use in Zone 2.

| **Model TTH200-E2** |
|---|
| Declaration of conformity |
| II 3 G Ex nA IIC T1-T6 Gc |

**IECEx intrinsic safety**

Approved for use in Zone 0, 1, and 2.

| **Model TTH200-H1** | |
|---|---|
| IECEx certificate of conformity | IECEx PTB 09.0014X |
| Ex ia IIC T6...T1 Ga | |
| Ex [ia IIC Ga] ib IIC T6...T1 Gb | |
| Ex [ia IIIC Da] ib IIC T6...T1 Gb | |

### LCD indicator

**ATEX intrinsic safety**

The device fulfills the requirements of Directive 2014/34/EU in case of corresponding purchase orders and is approved for use in Zone 0, 1 and 2.

| Type Examination Test Certificate | PTB 05 ATEX 2079 X |
|---|---|
| II 1G Ex ia IIC T6 Ga | |

**Non-sparking ATEX**

The device fulfills the requirements of Directive 2014/34/EU in case of corresponding purchase orders and is approved for use in Zone 2.

| Declaration of conformity |
|---|
| II 3 G Ex nA IIC T1-T6 Gc |

**IECEx intrinsic safety**

Approved for use in Zone 0, 1, and 2.

| IECEx certificate of conformity | IECEx PTB 12.0028X |
|---|---|
| Ex ia IIC T6 | |

## Temperature data

### Transmitter

**ATEX / IECEx intrinsic safety**

| **Temperature class** | **Permissible ambient temperature range** | |
|---|---|---|
| | **Device category 1 use** | **Device category 2 / 3 use** |
| T6 | −40 to 44 °C (−40 to 111.2 °F) | −40 to 56 °C (−40 to 132.8 °F) |
| T4-T1 | −40 to 60 °C (−40 to 140.0 °F) | −40 to 85 °C (−40 to 185.0 °F) |

**ATEX Non-sparking**

| **Temperature class** | **Device category 3 use** |
|---|---|
| T6 | −40 to 56 °C (−40 to 132.8 °F) |
| T5 | −40 to 71 °C (−40 to 159.8 °F) |
| T4 | −40 to 85 °C (−40 to 185.0 °F) |

# … Use in potentially explosive atmospheres in accordance with ATEX and IECEx

### LCD indicator

### ATEX / IECEx intrinsic safety, ATEX non-sparking

| Temperature class | Permissible ambient temperature range | |
|---|---|---|
| | Device category 1 use | Device category 2 / 3 use |
| T6 | −40 to 44 °C (−40 to 111.2 °F) | −40 to 56 °C (−40 to 132.8 °F) |
| T5 | −40 to 56 °C (−40 to 132.8 °F) | −40 to 71 °C (−40 to 159.8 °F) |
| T4-T1 | −40 to 60 °C (−40 to 140 °F) | −40 to 85 °C (−40 to 185 °F) |

## Electrical data

### Transmitter

### Intrinsic safety type of protection Ex ia IIC (part 1)

| | Supply circuit |
|---|---|
| Max. voltage | $U_i$ = 30 V |
| Short-circuit current | $I_i$ = 130 mA |
| Max. power | $P_i$ = 0.8 W |
| Internal inductance | $L_i$ = 160 µH* |
| Internal capacitance | $C_i$ = 0.57 nF** |

* From HW-Rev. 1.12, previously $L_i$ = 0.5 mH.

** From HW-Rev. 1.07, previously $C_i$ = 5 nF.

### Intrinsic safety type of protection Ex ia IIC (part 2)
### Thermocouples, voltages

| | Measurement circuit: resistance thermometer, resistances | Measurement circuit: thermocouples, voltages |
|---|---|---|
| Max. voltage | $U_o$ = 6.5 V | $U_o$ = 1.2 V |
| Short-circuit current | $I_o$ = 17.8 mA* | $I_o$ = 50 mA |
| Max. power | $P_o$ = 29 mW** | $P_o$ = 60 mW |
| Internal inductance | $L_i$ = 0 mH | $L_i$ = 0 mH |
| Internal capacitance | $C_i$ = 118 nF*** | $C_i$ = 118 nF*** |
| Maximum permissible external inductance | $L_o$ = 5 mH | $L_o$ = 5 mH |
| Maximum permissible external capacitance | $C_o$ = 1.55 µF | $C_o$ = 1.05 µF |

* From HW-Rev. 1.12, previously $I_o$ = 25 mA.

** From HW-Rev. 1.12, previously $P_o$ = 38 mW.

*** From HW-Rev. 1.12, previously $C_i$ = 49 nF.

### Intrinsic safety type of protection Ex ia IIC (part 3)

| | LCD indicator interface |
|---|---|
| Max. voltage | $U_o$ = 6.2 V |
| Short-circuit current | $I_o$ = 65.2 mA |
| Max. power | $P_o$ = 101 mW |
| Internal inductance | $L_i$ = 0 mH |
| Internal capacitance | $C_i$ = 0 nF |
| Maximum permissible external inductance | $L_o$ = 5 mH |
| Maximum permissible external capacitance | $C_o$ = 1.4 µF |

### LCD indicator
### Intrinsic safety type of protection Ex ia IIC

| Supply circuit | |
|---|---|
| Max. voltage | $U_i$ = 9 V |
| Short-circuit current | $I_i$ = 65.2 mA |
| Max. power | $P_i$ = 101 mW |
| Internal inductance | $L_i$ = 0 mH |
| Internal capacitance | $C_i$ = 0 nF |

# Use in potentially explosive atmospheres in accordance with FM and CSA

**Note**

- Further information on the approval of devices for use in potentially explosive atmospheres can be found in the explosion protection test certificates (at www.abb.com/temperature).
- Depending on the design, a specific marking in accordance with FM or CSA applies.

## Ex marking

### Transmitter

### FM Intrinsically Safe

| **Model TTH200-L1** | |
|---|---|
| Control Drawing | TTH200-L1H (I.S.) |
| Class I, Div. 1 + 2, Groups A, B, C, D | |
| Class I, Zone 0, AEx ia IIC T6 | |

### FM Non-Incendive

| **Model TTH200-L2** | |
|---|---|
| Control Drawing | TTH200-L2H (N.I.) |
| Class I, Div. 2, Groups A, B, C, D | |

### CSA Intrinsically Safe

| **Model TTH200-R1** | |
|---|---|
| Control Drawing | TTH200-R1H (I.S.) |
| Class I, Div. 1 + 2, Groups A, B, C, D | |
| Class I, Zone 0, Ex ia Group IIC T6 | |

### CSA Non-Incendive

| **Model TTH200-R2** | |
|---|---|
| Control Drawing | TTH200-R2H (1) (N.I.) |
| | TTH200-R2H (2, no conduit) (N.I.) |
| Class I, Div. 2, Groups A, B, C, D | |

### LCD indicator

### FM Intrinsically Safe

| Control Drawing | SAP_214 748 |
|---|---|
| I.S. Class I Div 1 and Div 2, Group: A, B, C, D or | |
| I.S. Class I Zone 0 AEx ia IIC T* | |
| $U_i$ / $V_{max}$ = 9 V, $I_i$ / $I_{max}$ < 65.2 mA, $P_i$ = 101 mW, $C_i$ = 0.4 µF, $L_i$ = 0 | |

### FM Non-Incendive

| Control Drawing | SAP_214 751 |
|---|---|
| N.I. Class I Div 2, Group: A, B, C, D oder Ex nL IIC T**, Class I Zone 2 | |
| $U_i$ / $V_{max}$ = 9 V, $I_i$ / $I_{max}$ < 65.2 mA, $P_i$ = 101 mW, $C_i$ = 0.4 µF, $L_i$ = 0 | |

### CSA Intrinsically Safe

| Control Drawing | SAP_214 749 |
|---|---|
| I.S. Class I Div 1 and Div 2; Group: A, B, C, D or | |
| I.S Zone 0 Ex ia IIC T* | |
| $U_i$ / $V_{max}$ = 9 V, $I_i$ / $I_{max}$ < 65.2 mA, $P_i$ = 101 mW, $C_i$ < 0.4 µF, $L_i$ = 0 | |

### CSA Non-Incendive

| Control Drawing | SAP_214 750 |
|---|---|
| N.I. Class I Div 2, Group: A, B, C, D oder Ex nL IIC T**, Class I Zone 2 | |
| $U_i$ / $V_{max}$ = 9 V, $I_i$ / $I_{max}$ < 65.2 mA, $P_i$ = 101 mW, $C_i$ < 0.4 µF, $L_i$ = 0 | |

* Temp. Ident: T6 $T_{amb}$ 56 °C, T4 $T_{amb}$ 85 °C

** Temp. Ident: T6 $T_{amb}$ 60 °C, T4 $T_{amb}$ 85 °C

# Ordering Information

## TTH200

| **Base model** | **TTH200** | **XX** | **X** | **XX** |
|---|---|---|---|---|
| TTH200 Head Mounted Temperature Transmitter, HART, Pt100 (RTD), thermocouples, electrical isolation | | | | |
| **Explosion Protection** | | | | |
| Without explosion protection | | Y0 | | |
| ATEX Intrinsic Safety type of protection: Zone 0: II 1 G Ex ia IIC T6 Ga, Zone 1 (0): II 2 (1) G Ex [ia IIC Ga] ib IIC T6 Gb, Zone 1 (20): II 2 G (1D) Ex [ia IIIC Da] ib IIC T6 Gb | | E1 | | |
| ATEX Non-sparking type of protection: Zone 2: II 3 G Ex nA IIC T1-T6 Gc | | E2 | | |
| IECEx Intrinsic Safety type of protection: Zone 0: Ex ia IIC T6 Ga, Zone 1 (0): Ex [ia IIC Ga] ib IIC T6 Gb, Zone 1 (20): Ex [ia IIIC Da] ib IIC T6 Gb | | H1 | | |
| FM Intrinsic Safety (IS): Class I, Div. 1+2, Groups A, B, C, D, Class I, Zone 0, AEx ia IIC T6 | | L1 | | |
| FM Non-incendive (NI): Class I, Div. 2, Groups A, B, C, D or Class I Zone 2 Group IIC T6 | | L2 | | |
| CSA Intrinsic Safety (IS): Class I, Div. 1+2, Groups A, B, C, D, Class I, Zone 0, Ex ia IIC | | R1 | | |
| CSA Non-incendive (NI): Class I, Div. 2, Groups A, B, C, D | | R2 | | |
| GOST Russia - metrological approval | | G1 | | |
| GOST Russia - metrological approval and EAC-Ex, Ex i - Zone 0 | | P2 | | |
| GOST Kazakhstan - metrological approval | | G3 | | |
| GOST Kazakhstan - metrological approval and EAC-Ex, Ex i - Zone 0 | | T2 | | |
| Inmetro Ex ia IIC T6...T4 Ga, Ex ib [ia Ga] IIC T6...T4 Gb Ex ib [ia IIIC Da] IIC T6...T4 Gb | | C1 | | |
| **Communication Protocol** | | | | |
| HART, programmable, output signal 4 to 20 mA | | | H | |
| **Configuration** | | | | |
| Standard configuration | | | | BS |
| Customer-specific configuration, except user curve | | | | BF* |

* E.g. set measuring range, TAG no.

## Additional ordering information TTH200

| | XX | XX | XXX | XX | XX | XX | XX |
|---|---|---|---|---|---|---|---|
| **Declarations and Certificates** | | | | | | | |
| SIL2 - Declaration of Conformity | CS | | | | | | |
| Declaration of compliance according EN 10204-2.1, with the order | C4 | | | | | | |
| Inspection certificate according EN 10204-3.1, visual, dimensional and functional test | C6 | | | | | | |
| **Calibration Certificates** | | | | | | | |
| With 5-point factory certificate | | EM | | | | | |
| Inspection certificate according EN 10204-3.1, 5-point calibration | | EP | | | | | |
| **Handling of Certificates** | | | | | | | |
| Send via e-mail | | | GHE | | | | |
| Send via mail | | | GHP | | | | |
| Send via mail express | | | GHD | | | | |
| Send with instrument | | | GHA | | | | |
| Only archived | | | GHS | | | | |
| **Field Housing** | | | | | | | |
| Aluminium field housing 80 x 75 x 57 mm, IP 65, including 2 pieces M16 cable glands | | | | H1** | | | |
| Polyester field housing 75 x 80 x 55 mm, IP 65, including 2 pieces M16 cable glands | | | | H2** | | | |
| Polycarbonate field housing 80 x 82 x 55 mm, IP 65, including 2 pieces M16 cable glands | | | | H3** | | | |
| Aluminium field housing 175 x 80 x 57 mm without separate terminal block, IP 65, including 1 piece M16 and 2 pieces M20 cable glands | | | | H6** | | | |
| Polyester field housing 190 x 75 x 55 mm with separate terminal block, IP 65, including 1 piece M16 and 2 pieces M20 cable glands | | | | H7** | | | |
| Polyester field housing 190 x 75 x 55 mm without separate terminal block, IP 65, including 1 piece M16 and 2 pieces M20 cable glands | | | | H8** | | | |
| **Display Options** | | | | | | | |
| LCD indicator type AS | | | | | D3 | | |
| **Mounting Options** | | | | | | | |
| Snap-on fixing set for 35 mm rail acc. EN 60175 (incl. fixing screws) | | | | | | SF | |
| **Documentation Language** | | | | | | | |
| German | | | | | | | M1 |
| English | | | | | | | M5 |
| Language package Western Europe / Scandinavia (Languages: DA, ES, FR, IT, NL, PT, FI, SV) | | | | | | | MW |
| Language package Eastern Europe (Languages: EL, CS, ET, LV, LT, HU, HR, PL, SK, SL, RO, BG) | | | | | | | ME |

** Not available with Explosion Protection

| Accessories | Order no. |
|---|---|
| TTH latching base set (packaging unit: 10 pcs.), for 35 mm rail in acc. with EN 60175 (incl. mounting screws) | 3KXT091230L0001 |
| TTH latching base set (packaging unit: 1 pcs.), for 35 mm rail in acc. with EN 60175 (incl. mounting screws) | 3KXT091230L0002 |
| TTH200 documentation on CD-ROM | 3KXT231002R0800 |
| TTH200 commissioning instructions, English | 3KXT231002R4401 |
| TTH200 commissioning instructions, German | 3KXT231002R4403 |
| TTH200 commissioning instructions, Western Europe / Scandinavia language package | 3KXT231002R4493 |
| TTH200 commissioning instructions, Eastern Europe language package | 3KXT231002R4494 |

# Order form configuration

## HART device design: Instructions for customer-specific configuration

| Configuration | | Selection |
|---|---|---|
| IEC 60751 | Resistance thermometer | ☐ Pt10 ☐ Pt50 ☐ Pt100 (Standard) ☐ Pt200 ☐ Pt500 ☐ Pt1000 |
| JIS C1604 | | ☐ Pt10 ☐ Pt50 ☐ Pt100 |
| MIL-T-24388 | | ☐ Pt10 ☐ Pt50 ☐ Pt100 ☐ Pt200 ☐ Pt1000 |
| DIN 43760 | | ☐ Ni50 ☐ Ni100 ☐ Ni120 ☐ Ni1000 |
| OIML R 84 | | ☐ Cu10 ☐ Cu100 |
| | Resistance measurement | ☐ 0 to 500 Ω ☐ 0 to 5000 Ω |
| IEC 60584 | Thermocouple | ☐ Type K ☐ Type J ☐ Type N ☐ Type R ☐ Type S ☐ Type T ☐ Type E ☐ Type B |
| DIN 43710 | | ☐ Type L ☐ Type U |
| ASTM E-988 | | ☐ Type C ☐ Type D |
| | Voltage measurement | ☐ –125 to 125 mV ☐ –125 to 1100 mV |
| Sensor circuit (for resistance thermometer and resistance measurement only) | | ☐Two-wire ☐ Three-wire (standard) ☐ Four-wire<br>Two-wire circuit: Compensation of sensor-wire resistance max. 100 Ω<br>☐ Sensor 1: ____ Ω |
| Reference junction (for thermocouples only) | | ☐ Internal (for standard thermocouple, except type B) ☐ None (type B)<br>☐ External / temperature: ____°C |
| Measuring range | | ☐ Lower range value : _____ (standard: 0)<br>☐ Upper range value : _____ (standard: 100) |
| Unit | | ☐Celsius (default) ☐ Fahrenheit ☐ Rankine ☐ Kelvin |
| Characteristic behavior | | ☐ rising 4 to 20 mA (standard) ☐ falling 20 to 4 mA |
| Output behavior for error | | ☐ Overrange / 22 mA (standard) ☐ Underrange / 3.6 mA |
| Output damping ($T_{63}$) | | ☐ Off (standard) ☐ ____ seconds (1 to 100 s) |
| TAG number | | ☐ _____ (maximum 8 characters) |
| Software write protection | | ☐ Off (standard) ☐ On |

# Trademarks

HART is a registered trademark of FieldComm Group, Austin, Texas, USA

**Sales** **Service**

Castel Maggiore (BO) 40013
Via Lirone 60/i

e-mail: info@eurotecsrl.com
Tel: +39 051/6321595
Website: www.eurotecsrl.com

C.F.: 04103780377
P.I.: 01596581205

**ABB Limited**
**Measurement & Analytics**
Howard Road, St. Neots
Cambridgeshire, PE19 8EU
UK
Tel: +44 (0)870 600 6122
Fax: +44 (0)1480 213 339
Email: enquiries.mp.uk@gb.abb.com

**ABB Inc.**
**Measurement & Analytics**
125 E. County Line Road
Warminster, PA 18974
USA
Tel: +1 215 674 6000
Fax: +1 215 674 7183

**ABB Automation Products GmbH**
**Measurement & Analytics**
Schillerstr. 72
32425 Minden
Germany
Tel: +49 571 830-0
Fax: +49 571 830-1806

**abb.com/temperature**

We reserve the right to make technical changes or modify the contents of this document without prior notice. With regard to purchase orders, the agreed particulars shall prevail.
ABB does not accept any responsibility whatsoever for potential errors or possible lack of information in this document.

We reserve all rights in this document and in the subject matter and illustrations contained therein. Any reproduction, disclosure to third parties or utilization of its contents – in whole or in parts – is forbidden without prior written consent of ABB.

© ABB 2019

3KXT231002R1001

DS/TTH200-EN Rev. C 02.2019