ABB MEASUREMENT & ANALYTICS | DATA SHEET

TTF300

Field-mount temperature transmitter

Measurement made easy

Temperature transmitter for all communication protocols. Redundancy thanks to two inputs

Reliable temperature measurement for the highest demands

- High accuracy, reliability and durability
- Specific sensor linearization via Callendar-Van Dusen coefficients and with value pair table (32 points)
- Approved for custody transfer measurements by MID certificate in accordance with Measuring Instruments Directive 2014/32/EU
- Suited for use in harsh environments from −50 °C (−58 °F)

Input circuit and communication

- Two universal sensor inputs for resistance thermometers (e.g. 2 x Pt100 in three-wire circuit) and thermocouples
- 4 to 20 mA, HART, PROFIBUS PA, FOUNDATION Fieldbus

Safety

- Global approvals for explosion protection up to Zone 0
- Functional safety SIL 2 / SIL 3 in accordance with IEC 61508 (HART)
- Device versioning in accordance with NE 53
- Continuous monitoring of supply voltage
- Wire break / corrosion monitoring in accordance with NE 89
- Extended diagnosis in accordance with NE 107 sensor drift monitoring

Configuration

- In accordance with FDT / DTM, EDD or FDI Standard (FIM)
- Turnable LCD indicator with operating buttons (optional)

Specification

CE Marking
The device fulfills all requirements for CE marking in accordance with all applicable guidelines.

Electrical isolation
3.5 kV DC (approx. 2.5 kV AC), 60 s, input to output

MTBF (Mean Time Between Failures)
190 years at 40 °C (104 °F) mean ambient temperature

Input filter
50 / 60 Hz

Switch-on delay
- HART®: < 10 s (I_a ≤ 3.6 mA during switch-on cycle)
- PROFIBUS®: 10 s, max. 30 s
- FOUNDATION Fieldbus®: < 10 s

Warm-up time
5 minutes

Rise time t90
400 to 1000 ms

Measured value update
10/s with 1 sensor, 5/s with 2 sensors, depending on sensor type and sensor circuit

Output filter
Digital filter 1st order: 0 to 100 s

Weight
- Die-cast aluminum: 1.25 kg (2.75 lb)
- Stainless steel: 2.75 kg (6.1 lb)

Housing material
- Die-cast aluminum, epoxy coated, color: gray RAL9002
- Stainless steel

Encapsulation material used for the device electronics
- Polyurethane (PUR), WEVO PU-417

Installation conditions
Mounting position: no restrictions

Electrical connection
- Thread (selectable) 2 × M20 × 1.5 / 2 × ½ in NPT / 2 × ¾ in NPT (using reducing piece),
- Ground screw external 6 mm^2, M5 internal 2 × 2.5 mm^2, M4 terminals for lines up to 2.5 mm^2 and handheld terminal interface

Plastic cable gland 2 × M20 1.5:
- Cable outside diameter 6 to 12 mm (0.24 to 0.47 in), Ex: 5 to 10 mm (0.2 to 0.39 in)
- Temperature range −30 to 80 °C (−22 to 176 °F), Ex: −20 to 80 °C (−4 to 176 °F)
- For Non-Ex: Polyamide gray
- For intrinsically safe design, intrinsic safety, non-incendive and dust-explosion protection: Polyamide blue

Metal cable gland (2 × M20 × 1.5 / 2 × ½ in NPT):
- Flameproof (enclosure), explosionproof
- Cable outside diameter 3.2 to 8.7 mm (0.13 to 0.34 in)
- Temperature range: −50 to 85 °C (−58 to 185 °F)
- Additional cable outside diameters: upon request

Lightning protection
- For cable gland M20 × 1.5 (see data sheet 10/63-6.15)
- Non-Ex: type NGV220-NO
- Intrinsic safety: type NGV220-EX

Dimensions
Refer to **Dimensions** on page 17.

... Specification

Ambient conditions

Ambient temperature

- Standard: −40 to 85 °C (−40 to 185 °F)
- Optional: −50 to 85 °C (−58 to 185 °F)
- Limited temperature range during operation with LCD indicator: −20 to 70 °C (−4 to 158 °F)
- Limited temperature range with explosion-proof design: see corresponding certificate
- Limited temperature range with MID certification: see corresponding certificate

Transport / Storage temperature
−50 to 85 °C (−58 to 185 °F)

Climate class in accordance with DIN EN 60654-1
Cx −40 to 85 °C (−40 to 185 °F) at 5 to 95 % relative air humidity

Max. permissible humidity in accordance with IEC 60068-2-30
100 % relative air humidity

Vibration resistance in accordance with IEC 60068-2-6
10 to 2000 Hz at 5 g, during operation and transport

Shock resistance in accordance with IEC 68-2-27
gn = 30, during operation and transport

IP rating
IP 66 and IP 67, NEMA 4X, ENCL 4X

Electromagnetic compatibility

Emitted interference in accordance with IEC EN 61326 and Namur NE 21.

Interference-resistant in accordance with IEC 61326 and Namur NE 21.
Pt100: measuring range 0 to 100 °C (32 to 212 °F), span 100 K

Type of test	Testing accuracy	Effect
Burst to signal- / data lines	2 kV	< 0.5 %
Static discharge		
• Contact plate (indirect)	8 kV	No
• Supply terminals*	6 kV	No
• Sensor terminals*	4 kV	No
Radiated field		
80 MHz to 2 GHz	10 V/m	< 0.5 %
Coupling		
150 kHz to 80 MHz	10 V	< 0.5 %
Surge		
between the supply lines	0.5 kV	No malfunction
Line to ground	1 kV	

* Air discharge (at 1 mm (0.04 in) distance)

SIL functional safety

Only for devices with HART communication.
With conformity according to IEC 61508 for the use in safety relevant applications up to and including SIL 3 (redundant).

- In the use of one transmitter the device fulfills the requirements according to SIL 2.
- In the use of redundant handled transmitters the requirements can be fulfilled according to SIL 3.

Instructions on this can be found in the SIL-Safety Manual.

Type B LCD indicator

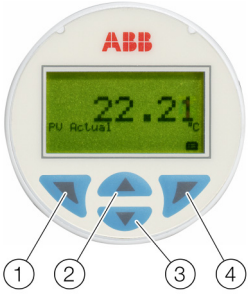

1 Quit / Cancel
2 Scroll back
3 Scroll forward
4 Select

Figure 1: Type B LCD indicator

CE Marking

The Type B LCD indicator fulfills all the requirements for CE marking in accordance with the applicable guidelines.

Properties

Transmitter-controlled graphic (alphanumeric) LCD indicator

- Character height, mode-dependent
- Sign, 4 digits, 2 decimal places
- Bar graph display

Display options

- Sensor 1 process value
- Sensor 2 process value
- Electronics / ambient temperature
- Output value
- Output %
- Display diagnostic information related to transmitter and sensor status

Specification

Temperature range

- −20 to 70 °C (−4 to 158 °F)

Restricted display function (contrast, reaction time) in the temperature ranges:

- −50 to −20 °C (−58 to −4 °F)
  or
- 70 to 85 °C (158 to 185 °F)

Humidity

- 0 to 100 %, condensation permitted

Configuration function

- Sensor configuration for standard sensors
- Measuring range
- Behavior in the event of a fault (HART®)
- Software write protection for configuration data
- Device address with HART® and PROFIBUS PA®

Input - resistance thermometer / resistances

Resistance thermometer

- Pt100 in accordance with IEC 60751, JIS C1604, MIL-T-24388
- Ni in accordance with DIN 43760
- Cu in accordance with recommendation OIML R 84

Resistance measurement

- 0 to 500 Ω
- 0 to 5000 Ω

Sensor connection type

Two-, three-, four-wire circuit

Connection lead

- Maximum sensor line resistance
  per line 50 Ω in accordance with NE 89
- Three-wire circuit:
  Symmetrical sensor line resistances
- Two-wire circuit:
  Compensation up to 100 Ω total lead resistance

Measurement current

< 300 µA

Sensor short circuit

< 5 Ω (for resistance thermometer)

Sensor wire break

- Measuring range: 0 to 500 Ω > 0.6 to 10 kΩ
- Measuring range: 0 to 5 Ω > 5.3 to 10 kΩ

Corrosion detection in accordance with NE 89

- Three-wire resistance measurement > 50 Ω
- Four-wire resistance measurement > 50 Ω

Sensor error signaling

- Resistance thermometer:
  Sensor short circuit and sensor wire break
- Linear resistance measurement:
  Sensor wire break

... Specification

Input - thermocouples / voltages

Types
- B, E, J, K, N, R, S, T in accordance with IEC 60584
- U, L in accordance with DIN 43710
- C, D in accordance with ASTM E-988

Voltages
- −125 to 125 mV
- −125 to 1100 mV

Connection lead
- Maximum sensor line resistance:
  per line 1.5 kΩ, total 3 kΩ

Sensor wire break monitoring in accordance with NE 89
- Pulsed with 1 µA outside measurement interval
- Thermocouple measurement 5.3 to 10 kΩ
- Voltage measurement 5.3 to 10 kΩ

Input resistance
> 10 MΩ

Internal reference junction Pt1000, IEC 60751 Cl. B
(no additional jumpers necessary)

Sensor error signaling
- Thermocouple:
  Sensor wire break
- Linear voltage measurement:
  Sensor wire break

Functionality input

Freestyle characteristic / 32-points-sampling point table
- Resistance measurement up to a maximum of 5 kΩ
- Voltages up to maximum 1.1 V

Sensor error adjustment
- Through Callendar-Van Dusen coefficients
- Through value table, 32 support points
- Through single-point adjustment (offset adjustment)
- Through two-point adjustment

Input functionality
- 1 Sensor
- 2 Sensors:
  mean measurement,
  differential measurement,
  sensor redundancy,
  Sensor drift monitoring

HART® output

Transmission characteristics
- Temperature linear
- Resistance linear
- Voltage linear

Output signal
- Configurable 4 to 20 mA (standard)
- Configurable 20 to 4 mA
  (Dynamic range: 3.8 to 20.5 mA in accordance with NE 43)

Simulation mode
3.5 to 23.6 mA

Induced current consumption
< 3.5 mA

Maximum output current
23.6 mA

Configurable error current signal
- Overrange 22 mA (20.0 to 23.6 mA)
- Underrange 3.6 mA (3.5 to 4.0 mA)

PROFIBUS PA® output

Output signal

- PROFIBUS – MBP (IEC 61158-2)
- Baud rate 31.25 kBit/s
- PA-Profile 3.01
- FISCO compliant (IEC 60079-27)
- ID-Number: 0x3470 [0x9700]

Error current signal

- FDE (Fault Disconnection Electronic)

Block structure

- Physical Block
- Transducer Block 1 – Temperature
- Transducer Block 2 – HMI (LCD indicator)
- Transducer Block 3 – enhanced diagnosis
- Analog Input 1 – Primary Value (Calculated Value*)
- Analog Input 2 – SECONDARY VALUE_1 (Sensor 1)
- Analog Input 3 – SECONDARY VALUE_2 (Sensor 2)
- Analog Input 4 – SECONDARY VALUE_3 (reference junction temperature)
- Analog Output – optional HMI display (Transducer Block 2)
- Discrete Input 1 – extended diagnosis 1 (Transducer Block 3)
- Discrete Input 2 – extended diagnosis 2 (Transducer Block 3)

* Sensor 1, Sensor 2 or difference or mean

FOUNDATION Fieldbus® output

Output signal

- FOUNDATION Fieldbus H1 (IEC 611582-2)
- Baud rate 31.25 kBit/s, ITK 5.x
- FISCO compliant (IEC 60079-27)
- Device ID: 000320001F...

Error current signal

- FDE (Fault Disconnection Electronic)

Block structure*

- Resource Block
- Transducer Block 1 – Temperature
- Transducer Block 2 – HMI (LCD indicator)
- Transducer Block 3 – enhanced diagnosis
- Analog Input 1 – PRIMARY_VALUE_1 (Sensor 1)
- Analog Input 2 – PRIMARY_VALUE_2 (Sensor 2)
- Analog Input 3 – PRIMARY_VALUE_3 (Calculated Value**)
- Analog Input 4 – SECONDARY_VALUE (reference junction temperature)
- Analog Output – optional HMI display (Transducer Block 2)
- Discrete Input 1 – extended diagnosis 1 (Transducer Block 3)
- Discrete Input 2 – extended diagnosis 2 (Transducer Block 3)
- PID – PID controller

LAS (Link Active Scheduler) link master functionality

* For the block description, block index, execution times, and block class, refer to the interface description

** Sensor 1, Sensor 2 or difference or mean

... Specification

Power supply

Two-wire technology, polarity safe; power supply lines = signal lines

Note
Following calculations apply for standard applications. This should be taken into consideration when working with a higher maximum current.

Power supply – HART®

Input terminal voltage
- Non-Ex application:
  U_S = 11 to 42 V DC
- Ex applications:
  U_S = 11 to 30 V DC

Maximum permissible residual ripple for input terminal voltage
During communication this complies with the HART FSK 'Physical Layer' specification.

Undervoltage detection on the transmitter
If the terminal voltage on the transmitter down-scales a value of 10 V, this may lead to an output current of I_a ≤ 3.6 mA.

Maximum load
R_B = (supply voltage – 11 V) / 0.022 A

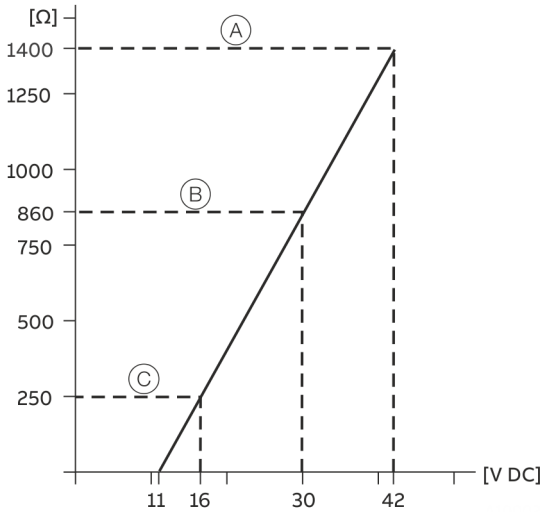

(A) TTF300
(B) TTF300 in Ex-applications
(C) HART communication resistance

Figure 2: Maximum load depending on input terminal voltage

Maximum power
$P = U_s \times 0.022$ A
E. G.: U_s = 24 V → P_{max} = 0.528 W

Power supply – PROFIBUS® / FOUNDATION Fieldbus®

Input terminal voltage
- Non-Ex application:
  U_S = 9 to 32 V DC
- Ex-applications:
  U_S = 9 to 17,5 V DC (FISCO)
  U_S = 9 to 24 V DC (Fieldbus Entity model I.S.)

Current consumption
≤ 12 mA

Measuring accuracy

Includes linearity error, repeatability / hysteresis at 23 °C (73.4 °F) ± 5 K and 20 V supply voltage.
Information on measuring accuracy corresponds to 3 σ (Gaussian distribution).
Long-term drift: ±0.05 °C (±0.09 °F) or ±0.05 %* per year, the larger value applies.

Sensor		Measuring range limit	Minimum span	Measuring accuracy	
				Input (24-bit AD-converter)	Analog output* (16-Bit D / A-converter)
Resistance thermometer / resistor					
DIN IEC 60751	Pt10 (a=0.003850)	−200 to 850 °C (−328 to 1562 °F)	10 °C (18 °F)	±0,80 °C (±1.44 °F)	±0,05 %
	Pt50 (a=0.003850)			±0,16 °C (±0.29 °F)	±0,05 %
	Pt100 (a=0.003850)**			±0,08 °C (±0.14 °F)	±0,05 %
	Pt200 (a=0.003850)			±0,24 °C (±0.43 °F)	±0,05 %
	Pt500 (a=0.003850)			±0,16 °C (±0.29 °F)	±0,05 %
	Pt1000 (a=0.003850)			±0,08 °C (±0.14 °F)	±0,05 %
JIS C1604	Pt10 (a=0.003916)	−200 to 645 °C (−328 to 1193 °F)	10 °C (18 °F)	±0,80 °C (±1.44 °F)	±0,05 %
	Pt50 (a=0.003916)			±0,16 °C (±0.29 °F)	±0,05 %
	Pt100 (a=0.003916)			±0,08 °C (±0.14 °F)	±0,05 %
MIL-T-24388	Pt10 (a=0.003920)	−200 to 850 °C (−328 to 1562 °F)	10 °C (18 °F)	±0,80 °C (±1.44 °F)	±0,05 %
	Pt50 (a=0.003920)			±0,16 °C (±0.29 °F)	±0,05 %
	Pt100 (a=0.003920)			±0,08 °C (±0.14 °F)	±0,05 %
	Pt200 (a=0.003920)			±0,24 °C (±0.43 °F)	±0,05 %
	Pt1000 (a=0.003920)			±0,08 °C (±0.14 °F)	±0,05 %
DIN 43760	Ni50 (a=0.006180)	−60 to 250 °C (−76 to 482 °F)	10 °C (18 °F)	±0,16 °C (±0.29 °F)	±0,05 %
	Ni100 (a=0.006180)			±0,08 °C (±0.14 °F)	±0,05 %
	Ni120 (a=0.006180)				±0,05 %
	Ni1000 (a=0.006180)				±0,05 %
OIML R 84	Cu10 (a=0.004270)	−50 to 200 °C (−58 to 392 °F)	10 °C (18 °F)	±0,80 °C (±1.44 °F)	±0,05 %
	Cu100 (a=0.004270)			±0,08 °C (±0.14 °F)	±0,05 %
	Resistance measurement	0 to 500 Ω	4 Ω	±32 mΩ	±0,05 %
		0 to 5000 Ω	40 Ω	±320 mΩ	±0,05 %

* Percentages refer to the configured measuring span, omitted for PROFIBUS PA® and FOUNDATION Fieldbus®

** Standard Version

... Specification

Sensor		Measuring range limit	Minimum span	Measuring accuracy	
				Input (24-bit AD-converter)	Analog output* (16-Bit D / A-converter)
Thermocouples / voltages**					
IEC 60584	Type K (Ni10Cr-Ni5)	−270 to 1372 °C (−454 to 2502 °F)	50 °C (90 °F)	±0,35 °C (±0.63 °F)	±0,05 %
	Type J (Fe-Cu45Ni)	−210 to 1200 °C (−346 to 2192 °F)			±0,05 %
	Type N (Ni14CrSi-NiSi)	−270 to 1300 °C (−454 to 2372 °F)			±0,05 %
	Type T (Cu-Cu45Ni)	−270 to 400 °C (−454 to 752 °F)			±0,05 %
	Type E (Ni10Cr-Cu45Ni)	−270 to 1000 °C (−454 to 1832 °F)			±0,05 %
	Type R (Pt13Rh-Pt)	−50 to 1768 °C (−58 to 3215 °F)	100 °C (180 °F)	±0,95 °C (±1.71 °F)	±0,05 %
	Type S (Pt10Rh-Pt)				±0,05 %
	Type B (Pt30Rh-Pt6Rh)	−0 to 1820 °C (32 to 3308 °F)			±0,05 %
DIN 43710	Type L (Fe-CuNi)	−200 to 900 °C (−328 to 1652 °F)	50 °C (90 °F)	±0,35 °C (±0.63 °F)	±0,05 %
	Type U (Cu-CuNi)	−200 to 600 °C (−328 to 1112 °F)			±0,05 %
ASTM E 988	Type C	−0 to 2315 °C (32 to 4200 °F)	100 °C (180 °F)	±1,35 °C (±2.43 °F)	±0,05 %
	Type D				±0,05 %
	Voltage measurement	−125 to 125 mV	2 mV	± 12 µV	±0,05 %
		−125 to 1100 mV	20 mV	± 120 µV	±0,05 %

* Percentages refer to the configured measuring span, omitted for PROFIBUS PA® and FOUNDATION Fieldbus®

** For digital measuring accuracy, the internal reference junction error must be added: Pt1000, DIN IEC 60751 Cl. B

Operating influence

The percentages refer to the configured measuring span.

Input terminal voltage effect / load effect:
Within the specified limit values for the voltage / load, the total influence is less than 0.001 % per volt.

Normal-mode rejection ratio:
> 65 dB at 50 / 60 Hz
Common-mode rejection ratio:
> 120 dB at 50 / 60 Hz

Ambient temperature influence:
Based on 23 °C (73.4 °F) for an ambient temperature range of −40 to 85 °C (−40 to 185 °F)[4]

Sensor		Ambient temperature effect per 1 °C (1.8 °F) deviation from 23 °C (73.4 °F)	
		Input (24 bit AD-converter)	Analog output [1, 2] (16 bit DA-converter)
Resistance thermometer for two-, three- and four-wire circuits			
IEC, JIS, MIL	Pt10	±0,04 °C (±0.072 °F)	±0.003 %
	Pt50	±0.008 °C (±0.014 °F)	±0.003 %
	Pt100	±0.004 °C (±0.007 °F)	±0.003 %
IEC, MIL	Pt200	±0.02 °C (±0.036 °F)	±0.003 %
	Pt500	±0.008 °C (±0.014 °F)	±0.003 %
	Pt1000	±0.004 °C (±0.007 °F)	±0.003 %
DIN 43760	Ni50	±0.008 °C (±0.014 °F)	±0.003 %
	Ni100	±0.004 °C (±0.007 °F)	±0.003 %
	Ni120	±0.003 °C (±0.005 °F)	±0.003 %
	Ni1000	±0.004 °C (±0.007 °F)	±0.003 %
OIML R 84	Cu10	±0,04 °C (±0.072 °F)	±0.003 %
	Cu100	±0.004 °C (±0.007 °F)	±0.003 %
Resistance measurement			
	0 to 500 Ω	± 0.002 Ω	±0.003 %
	0 to 5000 Ω	± 0.02 Ω	±0.003 %
Thermocouple, for all defined types			
		± [(0.001 % × (ME[mV] / MS[mv]) + (100 % × (0.009 °C / MS [°C])][3]	±0.003 %
Voltage measurement			
	−125 to 125 mV	±1.5 µV	±0.003 %
	−125 to 1100 mV	±15 µV	±0.003 %

1 Percentages refer to the configured measuring span of the analog output signal
2 Influence of the DA-converter is omitted with the PROFIBUS PA® and FOUNDATION Fieldbus®
3 ME = voltage value of the thermocouple at the upper range value in accordance with the standard
MA = voltage value of the thermocouple at the lower range value in accordance with the standard
MS = voltage value of the thermocouple over the measuring span in accordance with the standard. MS = (ME - MA)
4 For the optional extended ambient temperature range of up to −50 °C (−58 °F), doubled influence values shall apply in the range of −50 to −40 °C (−58 to −40 °F)

Electrical connections

Pin assignment

Resistance thermometers (RTD) / resistors (potentiometer)

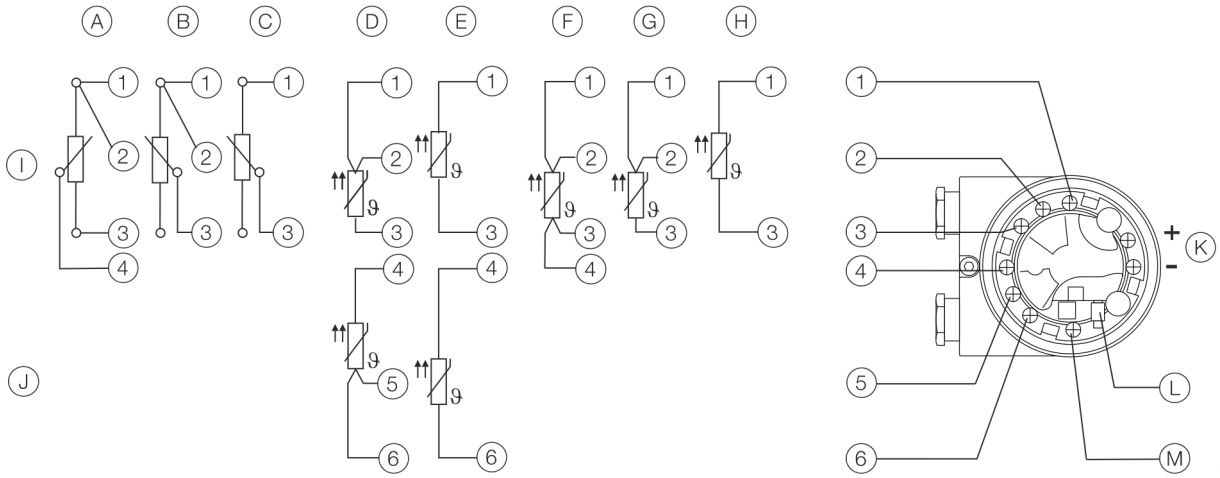

- (A) Potentiometer, four-wire circuit
- (B) Potentiometer, three-wire circuit
- (C) Potentiometer, two-wire circuit
- (D) 2 x RTD, three-wire circuit*
- (E) 2 x RTD, two-wire circuit*
- (F) RTD, four-wire circuit
- (G) RTD, three-wire circuit
- (H) RTD, two-wire circuit
- (I) Sensor 1
- (J) Sensor 2*
- (K) 4 to 20 mA HART®, PROFIBUS PA®, FOUNDATION Fieldbus®
- (L) Interface for LCD indicator and service
- (M) Ground terminals for shield support for sensors and supply / signal lines
- (1) – (6) Sensor connection (of measuring inset)

* Sensor backup / sensor redundancy, sensor drift monitoring, mean measurement, or differential measurement

Figure 3: Terminal assignment resistance thermometer (RTD) / resistors (potentiometer)

Thermocouples / voltages and resistance thermometer (RTD) / thermocouple combinations

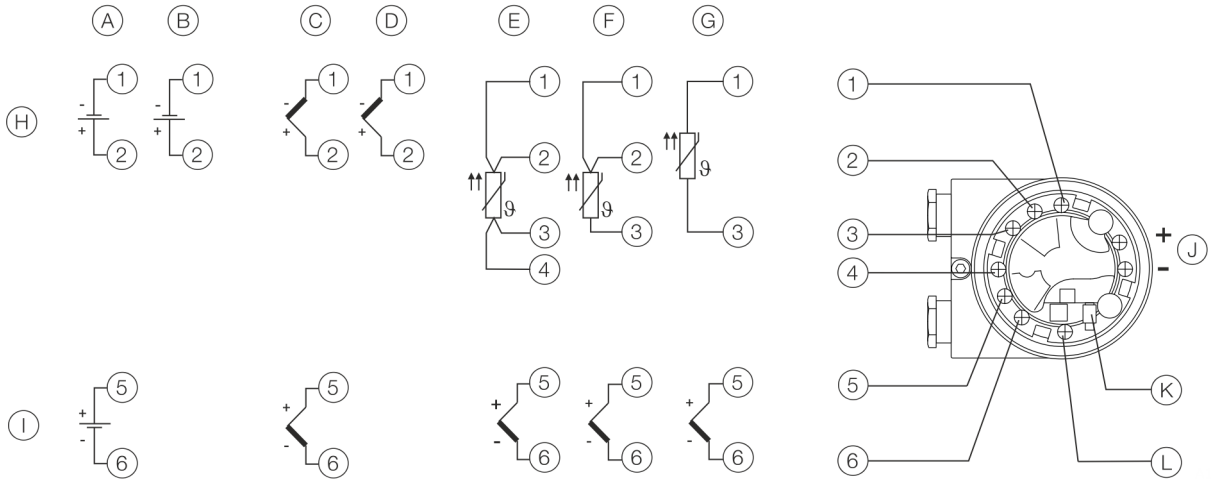

- (A) 2 x voltage measurement*
- (B) 1 x voltage measurement
- (C) 2 x thermocouple*
- (D) 1 x thermocouple
- (E) 1 x RTD, four-wire circuit and thermocouple*
- (F) 1 x RTD, three-wire circuit and thermocouple*
- (G) 1 x RTD, two-wire circuit and thermocouple*
- (H) Sensor 1
- (I) Sensor 2*
- (J) 4 to 20 mA HART®, PROFIBUS PA®, FOUNDATION Fieldbus®
- (K) Interface for LCD indicator and service
- (L) Ground terminals for shield support for sensors and supply / signal lines
- (1) – (6) Sensor connection (of measuring inset)

* Sensor backup / sensor redundancy, sensor drift monitoring, mean measurement or differential measurement

Figure 4: Terminal assignment thermocouples / voltages and resistance thermometer (RTD) / thermocouple combinations

Communication

Configuration parameters

Measurement type

- Sensor type, connection type
- Error signaling
- Measuring range
- General information, e.g. TAG number
- Damping
- Warning and alarm thresholds
- Output signal simulation
- For details, see See **Order form configuration** on page 27..

Write protection

Software write protection

Diagnostic information in accordance with NE 107

Standard:

- Sensor error signalling (wire break or short-circuit)
- Device error
- Limit value up-- / down-scaled
- Upper range up- / down-scaled
- Simulation active

Advanced:

- Sensor redundancy / sensor backup active (in case sensor fails) with configurable analog alarm pulse signaling
- Drift monitoring with configurable alarm pulse signaling
- Sensor- / sensor connection lead corrosion
- Supply voltage down-scaled
- Drag indicator for Sensor 1, Sensor 2 and ambient temperature
- Ambient temperature up-scaled
- Ambient temperature down-scaled
- Operating hours counter

HART® Communication

The device is listed with the FieldComm Group.

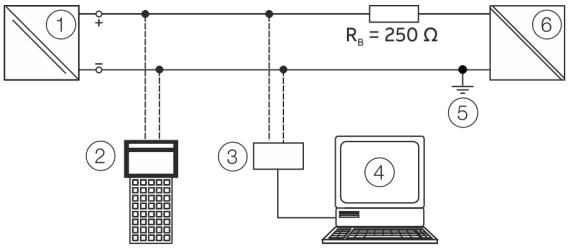

1 Transmitter
2 Handheld terminal
3 HART® modem
4 PC with Asset Management Tool
5 Grounding (optional)
6 Power supply unit (process interface)
R_B load resistance (if necessary)

Figure 5: Example for HART® connection

Manufacturer ID	0x1A
Device ID	HART 5: 0x000B, HART 7: 0x1A0B
Profile	HART 5.1 (can be switched to HART 7)
Configuration	On device using LCD indicator DTM, EDD, FDI (FIM)
Transmission signal	BELL Standard 202

Operating modes

- Point-to-point communication mode – standard (general address 0)
- Multidrop mode (addressing 1 to 15)
- Burst Mode

Configuration options / tools

Driver-independent:

- HMI LCD indicator with configuration function

Driver-dependent:

- Device management / Asset management tools
- FDT technology – via TTX300-DTM driver (Asset Vision Basic / DAT200)
- EDD – via TTX300 EDD driver (Handheld terminal, Field Information Manager / FIM)
- FDI technology – via TTX300 package (Field Information Manager / FIM)

Diagnosis notice

- Overrange- / underrange in accordance with NE 43
- HART diagnosis

PROFIBUS PA® Communication

The interface complies with Profile 3.01
(Standard PROFIBUS®, EN 50170, DIN 1924 [PRO91]).

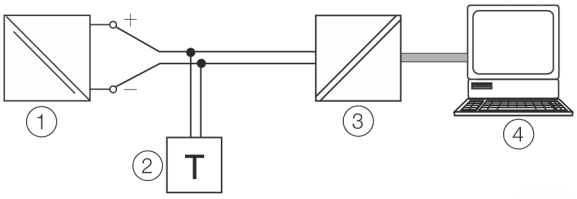

1 Transmitter
2 Bus termination
3 Segment coupler
4 PC / DCS

Figure 6: Example for PROFIBUS PA® connection

Manufacturer ID	0x1A
ID number	0x3470 [0x9700]
Profile	PA 3.01
Configuration	On device using LCD indicator DTM EDD GSD
Transmission signal	IEC 61158-2

Voltage / current consumption

- Mean current consumption: 12 mA.
  In the event of an error, the FDE function (= Fault Disconnection Electronic) integrated in the device makes sure that the current consumption cannot exceed a maximum of 20 mA.

FOUNDATION Fieldbus® Communication

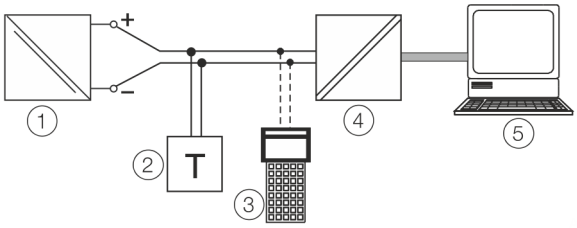

1 Transmitter
2 Bus termination
3 Handheld terminal
4 Linking Device
5 PC / DCS

Figure 7: Example for FOUNDATION Fieldbus® connection

Device ID	000320001F...
ITK	5.x
Configuration	On device using LCD indicator EDD
Transmission signal	IEC 61158-2

Voltage / current consumption

- Mean current consumption: 12 mA.
  In the event of an error, the FDE function (= Fault Disconnection Electronic) integrated in the device makes sure that the current consumption cannot exceed a maximum of 20 mA.

MID Certification

TTF300 with MID certification

The temperature transmitter TTF300 is certified by an MID Parts Certificate in accordance with the Measuring Instruments Directive 2014/32/EU (MID) and the standard WELMEC 7.2. The device with the appropriate configuration is therefore approved for 'Custody Transfer' measurements (fiscal metering).
The MID certification emphasizes the high accuracy, reliability and durability of the TTF300 .

Note
This chapter provides basic information on the MID-certified transmitter TTF300 . Before commissioning the device, full information should be consulted in the supplied MID documents (Parts Certificate and associated Description).
Any generally applicable statements on the transmitter TTF300 , especially pertaining to explosion protection and device safety, remain unaffected.

General
Devices with MID certification have their own EU declaration of conformity. In addition to the declaration, the 'Parts Certificate' and the associated 'Description' are enclosed with the device.
It is compulsory and imperative that the described areas of application, requirements and restrictions are complied with for the intended use of the device!

The requirements of explosion protection and functional safety (SIL) remain unaffected by the MID certification.

The number of the partial certificate (TC10833) of the notified body NMi Certin B.V. and the checksum (0x46c9) of the certified SW revision 01.03.00 are printed on the name plate of the device.

Areas of application, conditions and requirements
The temperature transmitter TTF300 with MID certification for custody transfer measurements is especially suited for measurement and control systems in the oil and gas industry. In addition to gas, any liquids except for water are permitted for measurement.

The MID certification refers to a special configuration of the transmitter. This must not be modified! An extract of the conditions and requirements stated in the certificate follows below:

- Communication protocol: HART 5, HART 7
- HW revision: 1.07
- SW revision: 01.03.00 with checksum 0x46c9
- The checksum of the software (firmware) is printed on the name plate of the device
- On sensor Pt100 in a four-wire circuit
- Permissible measuring range: −50 to 150 °C (−58 to 302 °F)
- Ambient temperature range with and without LCD indicator: −10°C to 70 °C (14 to 158 °F)

Note
The MID certification can generally be combined with all certifications of explosion protection.
The ambient temperature and measuring range named in the corresponding explosion protection certificate, however, limit the ranges permitted in the MID certificate.

Note
The HW write protection on the device should be activated after installation and configuration. The housing cover should be secured and the device housing sealed using the supplied seal.

Dimensions

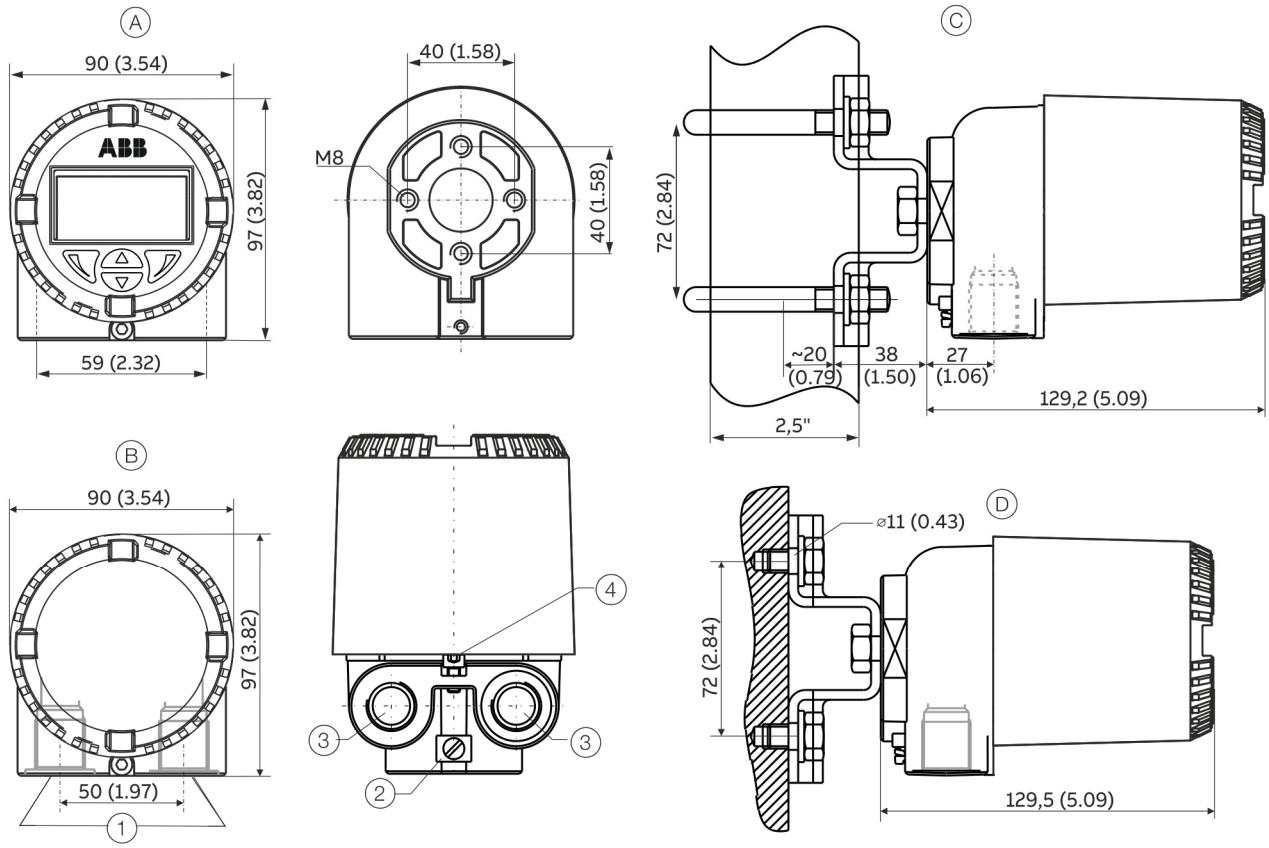

(A) Housing with clear lid for indicator

(B) Closed housing

(C) Pipe mounting

(D) Wall mounting, 4-hole wall attachment, Ø 11 mm (0.43 in) arranged in a square, at a distance of 72 mm (2.84 in)

(1) Electrical connections

(2) Potential equalization screw M5

(3) M20 × 1.5 or ½ in NPT

(4) Locking screw

Figure 8: Dimensions in mm (in)

Use in potentially explosive atmospheres in accordance with ATEX and IECEx

Note

- Further information on the approval of devices for use in potentially explosive atmospheres can be found in the explosion protection test certificates (at www.abb.com/temperature).
- Depending on the design, a specific marking in accordance with ATEX or IECEx applies.
- In devices with combined types of protection, for example TTF300 -E4, observe the 'Product Identification' chapter in the operating or commissioning instruction before commissioning.

Ex marking

Transmitter

ATEX intrinsic safety

The device fulfills the requirements of Directive 2014/34/EU in case of corresponding purchase orders and is approved for use in Zone 0, 1 and 2.

Model TTF300-E1H		
Type Examination Test Certificate		PTB 05 ATEX 2017 X
II 1 G	Ex ia IIC T6 Ga	
II 2 (1) G	Ex [ia IIC Ga] ib IIC T6 Gb	
II 2 G (1D)	Ex [ia IIIC Da] ib IIC T6 Gb	
Model TTF300-E1P and TTF300-E1F		
Type Examination Test Certificate		PTB 09 ATEX 2016 X
II 1 G	Ex ia IIC T6 Ga	
II 2 (1) G	Ex [ia IIC Ga] ib IIC T6 Gb	
II 2 G (1D)	Ex [ia IIIC Da] ib IIC T6 Gb	

ATEX non-sparking and dust explosion protection

Approved for use in Zone 2 and 22.

Model TTF300-E5	
Declaration of conformity	
II 3 G	Ex nA IIC T1-T6 Gc
II 3 D	Ex tc IIIB T135°C Dc

ATEX dust explosion protection

Approved for use in Zone 21 and 22.

Model TTF300-D5H		
Type Examination Test Certificate		BVS 06 ATEX E 029
II 2D	Ex tb IIIC T135°C Db	
II 3D	Ex tc IIIC T135°C Dc	

ATEX dust explosion protection and intrinsic safety

Approved for zone 21, 22 and Zone 0, 1 and 2.

The 'D6H' coding combines the following types of protection: 'Intrinsic safety' (TTF300-E1H) and 'Dust explosion protection' (TTF300-D5H).
Devices with combined types of protection may only be operated in one of the possible types of protection. For this purpose, observe the 'Product Identification' chapter in the operating or commissioning instruction before commissioning.

Model TTF300-D6H		
Type Examination Test Certificate		BVS 06 ATEX E 029 PTB 05 ATEX 2017 X
II 2D	Ex tb IIIC T135°C Db	
II 1G	Ex ia IIC T6 Ga	

ATEX flameproof (enclosure)

Approved for use in Zone 1 and 2.

Model TTF300-E3		
Type Examination Test Certificate		PTB 99 ATEX 1144 X
II 2G	Ex db IIC T6/T4 Gb	

ATEX flameproof (enclosure) and intrinsic safety

Approved for use in Zone 0 (intrinsic safety only), 1 and 2.

The 'E4' coding combines the following types of protection: 'Intrinsic safety' (TTF300-E1) and 'Flameproof (enclosure)' (TTF300-E3). Devices with combined types of protection may only be operated in one of the possible types of protection. For this purpose, observe the 'Product Identification' chapter in the operating or commissioning instruction before commissioning.

Model TTF300-E4		
Type Examination Test Certificate		PTB 99 ATEX 1144 X PTB 05 ATEX 2017 X PTB 05 ATEX 2016 X
II 2G	Ex db IIC T6/T4 Gb	
II 1G	Ex ia IIC T6 Ga	

IECEx intrinsic safety

Approved for use in Zone 0, 1, and 2.

Model TTF300-H1H	
IECEx certificate of conformity	IECEx PTB 09.0014X
Model TTF300-H1P and TTF300-H1F	
IECEx certificate of conformity	IECEx PTB 11.0108X
Ex ia IIC T6...T1 Ga	
Ex [ia IIC Ga] ib IIC T6...T1 Gb	
Ex [ia IIIC Da] ib IIC T6...T1 Gb	

IECEx dust explosion protection

Approved for use in Zone 21 and 22.

Model TTF300-J5H	
IECEx certificate of conformity	IECEx BVS 17.0065X
Ex tb IIIC T135°C Db	
Ex tc IIIC T135°C Dc	

IECEx flameproof (enclosure)

Approved for use in Zone 1 and 2.

Model TTF300-H5	
IECEx certificate of conformity	IECEx PTB 12.0039 X
Ex db IIC T6/T4 Gb	

LCD indicator

ATEX intrinsic safety

The device fulfills the requirements of Directive 2014/34/EU in case of corresponding purchase orders and is approved for use in Zone 0, 1 and 2.

Type Examination Test Certificate	PTB 05 ATEX 2079 X
II 1G Ex ia IIC T6 Ga	

Non-sparking ATEX

The device fulfills the requirements of Directive 2014/34/EU in case of corresponding purchase orders and is approved for use in Zone 2.

Declaration of conformity
II 3 G Ex nA IIC T1-T6 Gc

IECEx intrinsic safety

Approved for use in Zone 0, 1, and 2.

IECEx certificate of conformity	IECEx PTB 12.0028X
Ex ia IIC T6	

... Use in potentially explosive atmospheres in accordance with ATEX and IECEx

Temperature data

Transmitter

ATEX / IECEx intrinsic safety, ATEX non-sparking

Temperature class	Permissible ambient temperature range	
	Device category 1 use	Device category 2 / 3 use
T6	−50 to 44 °C (−58 to 111.2 °F)	−50 to 56 °C (−58 to 132.8 °F)
T4 to T1	−50 to 60 °C (−58 to 140.0 °F)	−50 to 85 °C (−58 to 185.0 °F)

ATEX / IECEx Flameproof (Enclosure)

Temperature class	Permissible ambient temperature range on the connection head
T6	−40 to 67 °C (−40 to 152 °F)
T4 to T1	−40 to 85 °C (−40 to 185 °F)

LCD indicator

ATEX / IECEx intrinsic safety, ATEX non-sparking

Temperature class	Permissible ambient temperature range	
	Device category 1 use	Device category 2 / 3 use
T6	−40 to 44 °C (−40 to 111.2 °F)	−40 to 56 °C (−40 to 132.8 °F)
T4 to T1	−40 to 60 °C (−40 to 140 °F)	−40 to 85 °C (−40 to 185 °F)

Electrical data

Transmitter

Intrinsic safety type of protection Ex ia IIC (Part 1)

Supply circuit			
	TTF300-E1H TTF300-H1H	TTF300-E1P / -H1P TTF300-E1F / -H1F	
		FISCO*	ENTITY
Max. voltage	U_i = 30 V	U_i ≤ 17.5 V	U_i ≤ 24.0 V
Short-circuit current	I_i = 130 mA	I_i ≤ 183 mA**	I_i ≤ 250 mA
Max. power	P_i = 0.8 W	P_i ≤ 2.56 W**	P_i ≤ 1.2 W
Internal inductance	L_i = 0.5 mH	L_i ≤ 10 µH	L_i ≤ 10 µH
Internal capacitance	C_i = 0.57 nF***	C_i ≤ 5 nF	C_i ≤ 5 nF

* FISCO in accordance with 60079-27

** II B FISCO: I_i ≤ 380 mA, P_i ≤ 5.32 W

*** Only applies for HART variants. From HW Rev. 1.07, previously 5 nF

Intrinsic safety type of protection Ex ia IIC (Part 2)

Measurement current circuit		
	Resistance thermometers, resistors	Thermocouples, voltages
Max. voltage	U_o = 6.5 V	U_o = 1.2 V
Short-circuit current	I_o = 25 mA	I_o = 50 mA
Max. power	P_o = 38 mW	P_o = 60 mW
Internal inductance	L_i = 0 mH	L_i = 0 mH
Internal capacitance	C_i = 49 nF	C_i = 49 nF
Maximum permissible external inductance	L_o = 5 mH	L_o = 5 mH
Maximum permissible external capacitance	C_o = 1.55 µF	C_o = 1.05 µF

Intrinsic safety type of protection Ex ia IIC (Part 3)

LCD indicator interface	
Max. voltage	U_o = 6.2 V
Short-circuit current	I_o = 65.2 mA
Max. power	P_o = 101 mW
Internal inductance	L_i = 0 mH
Internal capacitance	C_i = 0 nF
Maximum permissible external inductance	L_o = 5 mH
Maximum permissible external capacitance	C_o = 1.4 µF

Type of protection flameproof (enclosure) Ex db IIC

Supply circuit	
Maximum voltage	U_S = 30 V
Maximum current	I_s = 32 mA, limited by the upstream fuse (rated fuse current 32 mA)

Measurement current circuit	
Maximum voltage	U_O = 6.5 V
Maximum current	I_O = 17.8 mA
Maximum power	P_O = 39 mW

Dust explosion protection type of protection Ex tb IIIC T135°C Db, Ex tc IIIC T135°C Dc

Non-intrinsically safe power supply

Supply circuit	
Maximum voltage	U_S = 30 V
Maximum current	I_s = 32 mA, limited by the upstream fuse (rated fuse current 32 mA)

Measurement current circuit	
Maximum permissible power dissipation in the measuring inset (sensor)	P_i = 0.5 W

Intrinsically safe power supply
If in the dust explosion protection type of protection, the transmitter is supplied with power from a power supply unit which is designed as intrinsically safe in the ‘Ex ia’ or ‘Ex ib’ type of protection, a limitation of the power supply circuit by an upstream fuse is not required.

In this case, the electric data of the transmitter for the intrinsic safety type of protection Ex ia IIC (Part 1) for TTF300-E1H and TTF300-H1H, Ex ia IIC (Part 2) as well Ex ia IIC (Part 3) should be complied with.
Refer to **Transmitter** on page 20.

LCD indicator
Intrinsic safety type of protection Ex ia IIC

Supply circuit	
Max. voltage	U_i = 9 V
Short-circuit current	I_i = 65.2 mA
Max. power	P_i = 101 mW
Internal inductance	L_i = 0 mH
Internal capacitance	C_i = 0 nF

Use in potentially explosive atmospheres in accordance with FM and CSA

Note

- Further information on the approval of devices for use in potentially explosive atmospheres can be found in the explosion protection test certificates (at www.abb.com/temperature).
- Depending on the design, a specific marking in accordance with FM or CSA applies.

Ex marking

Transmitter

FM Intrinsically Safe

Model TTF300-L1H	
Control Drawing	SAP_214832
Model TTF300-L1P	
Control Drawing	TTF300-L1..P (IS)
Model TTF300-L1F	
Control Drawing	TTF300-L1..F (IS)
Class I, Div. 1 + 2, Groups A, B, C, D	
Class I, Zone 0, AEx ia IIC	

FM Non-Incendive

Model TTF300-L2H	
Control Drawing	SAP_214830 (NI_PS)
	SAP_214828 (NI_AA)
Model TTF300-L2P	
Control Drawing	TTF300-L2..P (NI_PS)
	TTF300-L2..P (NI_AA)
Model TTF300-L2F	
Control Drawing	TTF300-L2..F (NI_PS)
	TTF300-L2..F (NI_AA)
Class I, Div. 2, Groups A, B, C, D	
Class I Zone 2 Group IIC T6	

FM Explosion proof

Model TTF300-L3
XP,NI, DIP Class I, II, III, Div. 1 + 2, Groups A-G, factory sealed

CSA Intrinsically Safe

Model TTF300-R1H	
Control Drawing	SAP_214825
Model TTF300-R1P	
Control Drawing	TTF300-R1..P (IS)
Model TTF300-R1F	
Control Drawing	TTF300-R1..F (IS)
Class I, Div. 1 + 2, Groups A, B, C, D	
Class I, Zone 0, Ex ia IIC	

CSA Non-Incendive

Model TTF300-R2H	
Control Drawing	SAP_214827 (NI_PS)
	SAP_214895 (NI_AA)
Model TTF300-R2P	
Control Drawing	TTF300-R2..P (NI_PS)
	TTF300-R2..P (NI_AA)
Model TTF300-R2F	
Control Drawing	TTF300-R2..F (NI_PS)
	TTF300-R2..F (NI_AA)
Class I, Div. 2, Groups A, B, C, D	

CSA Explosion proof

Model TTF300-R3
XP,NI, DIP Class I, II, III, Div. 1 + 2, Groups A-G, factory sealed

CSA Explosion Proof and Intrinsically Safe

Model TTF300-R7H (R1H + R3H)	
Control Drawing	SAP_214825
Model TTF300-R7P (R1P + R3P)	
Control Drawing	TTF300-R1..P (IS)
Model TTF300-R7F (R1F + R3F)	
Control Drawing	TTF300-R1..F (IS)
XP,NI, DIP Class I, II, III, Div. 1 + 2, Groups A-G, factory sealed	
Class I, Div. 1 + 2, Groups A, B, C, D	
Class I, Zone 0, Ex ia Group IIC T6	

LCD indicator

FM Intrinsically Safe

Control Drawing	SAP_214 748
I.S. Class I Div 1 and Div 2, Group: A, B, C, D or I.S. Class I Zone 0 AEx ia IIC T*	
U_i / V_{max} = 9 V, I_i / I_{max} < 65.2 mA, P_i = 101 mW, C_i = 0.4 µF, L_i = 0	

FM Non-Incendive

Control Drawing	SAP_214 751
N.I. Class I Div 2, Group: A, B, C, D oder Ex nL IIC T**, Class I Zone 2	
U_i / V_{max} = 9 V, I_i / I_{max} < 65.2 mA, P_i = 101 mW, C_i = 0.4 µF, L_i = 0	

CSA Intrinsically Safe

Control Drawing	SAP_214 749
I.S. Class I Div 1 and Div 2; Group: A, B, C, D or I.S Zone 0 Ex ia IIC T*	
U_i / V_{max} = 9 V, I_i / I_{max} < 65.2 mA, P_i = 101 mW, C_i < 0.4 µF, L_i = 0	

CSA Non-Incendive

Control Drawing	SAP_214 750
N.I. Class I Div 2, Group: A, B, C, D oder Ex nL IIC T**, Class I Zone 2	
U_i / V_{max} = 9 V, I_i / I_{max} < 65.2 mA, P_i = 101 mW, C_i < 0.4 µF, L_i = 0	

* Temp. Ident: T6 T_{amb} 56 °C, T4 T_{amb} 85 °C

** Temp. Ident: T6 T_{amb} 60 °C, T4 T_{amb} 85 °C

Ordering Information

TTF300

Base model	**TTF300**	**XX**	X	X	X	XX
TTF300 Field Mounted Temperature Transmitter, Pt100 (RTD), thermocouples, electrical isolation						
Explosion Protection						
Without explosion protection		Y0				
ATEX Intrinsic Safety type of protection: Zone 0: II 1 G Ex ia IIC T6 Ga, Zone 1 (0): II 2 (1) G Ex [ia IIC Ga] ib IIC T6 Gb, Zone 1 (20): II 2 G (1D) Ex [ia IIIC Da] ib IIC T6 Gb		E1				
ATEX Non-sparking type of protection: Zone 2 / Zone 22: II 3 G Ex nA IIC T1-T6 Gc und II 3 D Ex tc IIIB T135°C Dc (Not for application in explosive hybrid mixtures)		E5				
ATEX Dust Explosion Protection: Zone 21: II 2D Ex tb IIIC T135°C Db, Zone 22: II 3D Ex tc IIIC T135°C Dc		D5**				
ATEX Dust Explosion Protection and Intrinsic Safety (IS): Zone 21 / Zone 0: II 2D Ex tb IIIC T135°C Db and II 1 G Ex ia IIC T6 Ga (Not for application in explosive hybrid mixtures)		D6* **				
ATEX Flameproof type of protection: Zone 1: II 2 G Ex db IIC T6/T4 Gb		E3				
ATEX Flameproof and Intrinsic Safety type of protection: Zone 1 / Zone 0: II 2 G Ex db IIC T6/T4 Gb and II 1 G Ex ia IIC T6 Ga		E4				
IECEx Intrinsic Safety type of protection: Zone 0: Ex ia IIC T6 Ga, Zone 1 (0): Ex [ia IIC Ga] ib IIC T6 Gb, Zone 1 (20): Ex [ia IIIC Da] ib IIC T6 Gb		H1				
IECEx Dust Explosion Protection: Zone 21: Ex tb IIIC T135°C Db, Zone 22: Ex tc IIIC T135°C Dc		J5**				
Flameproof type of protection: Zone 1: Ex db IIC T6/T4 Gb		H5				
FM Intrinsic Safety (IS): Class I, Div. 1+2, Groups A, B, C, D, Class I, Zone 0, AEx ia IIC T6		L1				
FM Non-incendive (NI): Class I, Div. 2, Groups A, B, C, D oder Class I Zone 2 Group IIC T6		L2				
FM Explosion-proof (XP): XP, NI, DIP, Class I, II, III, Div. 1+2, Groups A-G, factory sealed		L3				
CSA Intrinsic Safety (IS): Class I, Div. 1+2, Groups A, B, C, D, Class I, Zone 0, Ex ia IIC		R1				
CSA Non-incendive (NI): Class I, Div. 2, Groups A, B, C, D		R2				
CSA Explosionproof (XP): XP, NI, DIP, Class I, II, III, Div. 1+2, Groups A-G, factory sealed		R3				
CSA Explosionproof (XP) and Intrinsic Safety (IS): XP, NI, DIP, Class I, II, III, Div. 1+2, Groups A-G, factory sealed und IS, Class I, Div. 1+2, Groups A, B, C, D, Class I, Zone 0, Ex ia IIC		R7				
GOST Russia - metrological approval		G1				
GOST Russia - metrological approval and EAC-Ex, Ex i - Zone 0		P2				
GOST Russia - metrological approval and EAC-Ex, Ex d		P3				
GOST Kazakhstan - metrological approval		G3				
GOST Kazakhstan - metrological approval and EAC-Ex, Ex i - Zone 0		T2				
GOST Kazakhstan - metrological approval and EAC-Ex, Ex d		T3				
GOST Belarus - metrological approval		M5				
GOST Belarus - metrological approval and EAC-Ex, Ex i - Zone 0		U2				
GOST Belarus - metrological approval and EAC-Ex, Ex d		U3				
Inmetro Ex ia IIC T6...T4 Ga, Ex ib [ia Ga] IIC T6...T4 Gb Exib [ia IIIC Da] IIC T6...T4 Gb		C1				
NEPSI Ex ia IIC T6		S1				
KOSHA Ex ia IIC T6		S5				

* According EN 60079-0 and EN 61241-0, the application in explosive hybrid mixtures (concomitance of potentially explosive dust and gas) is currently not allowed

** Only available with Communication Protocol code H (HART®)

Main ordering information TTF300	**X**	**X**	**X**	**XX**
Housing / Display				
Single-compartment housing (aluminium) / Without display	A			
Single-compartment housing (stainless steel) / Without display	B			
Single-compartment housing (aluminium) / With LCD-display HMI	C			
Single-compartment housing (stainless steel) / With LCD-display HMI	D			
Cable Entry				
Thread 2 × M20 × 1.5		1[1]		
Thread 2 × 1/2 in NPT		2		
Thread 2 × 3/4 in NPT		3[2]		
Cable gland 2 x M20 × 1.5 (plastic version with limited temperature range)		4[3]		
Communication Protocol				
HART®, programmable, output signal 4 to 20 mA, dual input			H	
PROFIBUS PA®			P	
FOUNDATION fieldbus®			F	
Configuration				
Standard configuration				BS
Customer-specific configuration, except user curve				BF[4]
Customer-specific configuration, including user curve				BG

1 Not available with Explosion Protection code L1, L2, L3, R1, R2, R3, R7, D5, D6, J5

2 Only available with Housing / Display code A, C

3 Not available with Explosion Protection code L3, R3, R7

4 E.g. set measuring range, TAG no.

… Ordering Information

Additional ordering information

TTF300 Field Mounted Temperature Transmitter	**XX**	**XX**	**XXX**	**XX**	**XX**	**XX**	**XX**	**XX**	**XX**	**XX**
Declarations and Certificates										
SIL2 - Declaration of Conformity	CS*									
Declaration of compliance according EN 10204-2.1, with the order	C4									
Inspection certificate according EN 10204-3.1, visual, dimensional and functional test	C6									
MID Parts Certificate for Custody Transfer	CO*									
Calibration Certificates										
With 5-point factory certificate		EM								
Inspection certificate according EN 10204-3.1, 5-point calibration		EP								
Handling of Certificates										
Send via e-mail			GHE							
Send via mail			GHP							
Send via mail express			GHD							
Send with instrument			GHA							
Only archived			GHS							
Mounting Bracket										
Wall mounting / 2 in pipe mounting bracket (stainless steel)				K2						
Cable Entry Options										
Cable gland 2 × ½ in NPT					U5**					
Extended Ambient Temperature Range										
−50 to 85 °C (−58 to 185 °F)						SE				
Device Identification Plate										
Stainless steel							T0			
Additional Tag Plate										
Stainless steel								I1		
Customer-specific Versions										
(Please specify)									Z9	
Documentation Language										
German										M1
English										M5
Language package Western Europe / Scandinavia (Languages: DE, EN, DA, ES, FR, IT, NL, PT, FI, SV)										MW
Language package Eastern Europe (Languages: DE, EL, CS, ET, LV, LT, HU, PL, SK, SL, RO, BG)										ME

* Only available with Communication Protocol code H (HART®)

** Only available with Cable Entry code 2

Accessories	**Order code**
TTF300 Commissioning Instruction, German	3KXT221001R4403
TTF300 Commissioning Instruction, English	3KXT221001R4401
TTF300 Commissioning Instruction, Language package Western Europe / Scandinavia	3KXT221001R4493
TTF300 Commissioning Instruction, Language package Eastern Europe	3KXT221001R4494

Order form configuration

HART device design

Customer-specific configuration		Selection
Number of sensors		☐ 1 sensor (standard) ☐ 2 sensors
Measurement type (for 2-sensor selection only)		☐ Sensor redundancy / sensor backup ☐ Sensor drift monitoring ____°C / K sensor drift differential ____s time limit for drift overshoot ☐ Difference measurement ☐ Average measurement
IEC 60751 JIS C1604 MIL-T-24388 DIN 43760 OIML R 84	Resistance thermometer	☐ Pt10 ☐ Pt50 ☐ Pt100 (Standard) ☐ Pt200 ☐ Pt500 ☐ Pt1000 ☐ Pt10 ☐ Pt50 ☐ Pt100 ☐ Pt10 ☐ Pt50 ☐ Pt100 ☐ Pt200 ☐ Pt1000 ☐ Ni50 ☐ Ni100 ☐ Ni120 ☐ Ni1000 ☐ Cu10 ☐ Cu100
	Resistance measurement	☐ 0 … 500 Ω ☐ 0 … 5000 Ω
IEC 60584 DIN 43710 ASTM E-988	Thermocouple	☐ Type K ☐ Type J ☐ Type N ☐ Type R ☐ Type S ☐ Type T ☐ Type E ☐ Type B ☐ Type L ☐ Type U ☐ Type C ☐ Type D
	Voltage measurement	☐ -125 … 125 mV ☐ -125 … 1100 mV
Sensor circuit (for resistance thermometer and resistance measurement only)		☐Two-wire ☐ Three-wire (standard) ☐ Four-wire Two-wire circuit: Compensation of sensor-wire resistance max. 100 Ω ☐ Sensor 1: ____ Ω ☐ Sensor 2: ____ Ω
Reference junction (for thermocouples only)		☐ Internal (for standard thermocouple, except type B) ☐ None (type B) ☐ External / temperature: ____°C
Measuring range		☐ Lower range value : _____ (standard: 0) ☐ Upper range value : _____ (standard: 100)
Unit		☐Celsius (default) ☐ Fahrenheit ☐ Rankine ☐ Kelvin
Characteristic behavior		☐ Rising 4 ... 20 mA (standard) ☐ Falling 20 ... 4 mA
Output behavior for error		☐ Overrange / 22 mA (standard) ☐ Underrange / 3.6 mA
Output damping (T_{63})		☐ Off (standard) ☐ ____ seconds (1 … 100 s)
Sensor number		☐ Sensor 1: _____ ☐ Sensor 2: _____
Resistor value at 0 °C / R_o Callendar-Van Dusen coefficient A Callendar-Van Dusen coefficient B Callendar-Van Dusen coefficient C (optional, for resistance thermometers only)		Sensor 1: R_o: _____ Sensor 2: R_o: _____ A: _____ A: _____ B: _____ B: _____ C: _____ C: _____
User characteristics based on linearization table		☐ Based on attached table of variate pairs
TAG number		☐ _____ (maximum 8 characters)
HART revision		☐ HART5 (standard) ☐ HART7
Software write protection		☐ Off (standard) ☐ On
'Maintenance required' alarm pulse or continuous signaling in accordance with NE 107		☐ Off (standard) pulse width ____ s (0.5 ... 59.5 s increment 0.5 s)

… Order form configuration

PROFIBUS PA / FOUNDATION Fieldbus device design

Customer-specific configuration		Selection
Number of sensors		☐ 1 sensor (standard) ☐ 2 sensors
Measurement type (for 2-sensor selection only)		☐ Sensor redundancy / sensor backup ☐ Sensor drift monitoring ____°C / K sensor drift differential ____s time limit for drift overshoot ☐ Difference measurement ☐ Average measurement
IEC 60751 JIS C1604 MIL-T-24388 DIN 43760 OIML R 84	Resistance thermometer	☐ Pt10 ☐ Pt50 ☐ Pt100 (Standard) ☐ Pt200 ☐ Pt500 ☐ Pt1000 ☐ Pt10 ☐ Pt50 ☐ Pt100 ☐ Pt10 ☐ Pt50 ☐ Pt100 ☐ Pt200 ☐ Pt1000 ☐ Ni50 ☐ Ni100 ☐ Ni120 ☐ Ni1000 ☐ Cu10 ☐ Cu100
	Resistance measurement	☐ 0 … 500 Ω ☐ 0 … 5000 Ω
IEC 60584 DIN 43710 ASTM E-988	Thermocouple	☐ Type K ☐ Type J ☐ Type N ☐ Type R ☐ Type S ☐ Type T ☐ Type E ☐ Type B ☐ Type L ☐ Type U ☐ Type C ☐ Type D
	Voltage measurement	☐ -125 … 125 mV ☐ -125 … 1100 mV
Sensor circuit (for resistance thermometer and resistance measurement only)		☐Two-wire ☐ Three-wire (standard) ☐ Four-wire Two-wire circuit: Compensation of sensor-wire resistance max. 100 Ω ☐ Sensor 1: ____ Ω ☐ Sensor 2: ____ Ω
Reference junction (for thermocouples only)		☐ Internal (for standard thermocouple, except type B) ☐ None (type B) ☐ External / temperature: ____°C
Unit		☐Celsius (default) ☐ Fahrenheit ☐ Rankine ☐ Kelvin
Resistor value at 0 °C / R_0 Callendar-Van Dusen coefficient A Callendar-Van Dusen coefficient B Callendar-Van Dusen coefficient C (optional, for resistance thermometers only)		Sensor 1: R_0: _____ Sensor 2: R_0: _____ A: _____ A: _____ B: _____ B: _____ C: _____ C: _____
IDENT_number (PROFIBUS)		☐ device-specific 0x3470 (standard) ☐ profile 0x9700 (1 AI Block)
Bus address PROFIBUS PA		☐ PA: 0 ... 125 ☐ Standard PA: 126
TAG number		☐ _____ (maximum 16 characters)
Software write protection		☐ Off (standard) ☐ On

Trademarks

HART is a registered trademark of FieldComm Group, Austin, Texas, USA

PROFIBUS and PROFIBUS PA are registered trademarks of PROFIBUS & PROFINET International (PI)

FOUNDATION Fieldbus is a registered trademark of FieldComm Group, Austin, Texas, USA.

Sales

Service

Notes

Castel Maggiore (BO) 40013
Via Lirone 60/i

e-mail: info@eurotecsrl.com
Tel: +39 051/6321595
Website: www.eurotecsrl.com

C.F.: 04103780377
P.I.: 01596581205

—

ABB Limited
Measurement & Analytics
Howard Road, St. Neots
Cambridgeshire, PE19 8EU
UK
Tel: +44 (0)870 600 6122
Fax: +44 (0)1480 213 339
Email: enquiries.mp.uk@gb.abb.com

ABB Inc.
Measurement & Analytics
125 E. County Line Road
Warminster, PA 18974
USA
Tel: +1 215 674 6000
Fax: +1 215 674 7183

ABB Automation Products GmbH
Measurement & Analytics
Schillerstr. 72
32425 Minden
Germany
Tel: +49 571 830-0
Fax: +49 571 830-1806

abb.com/temperature

—

We reserve the right to make technical changes or modify the contents of this document without prior notice. With regard to purchase orders, the agreed particulars shall prevail.
ABB does not accept any responsibility whatsoever for potential errors or possible lack of information in this document.

We reserve all rights in this document and in the subject matter and illustrations contained therein. Any reproduction, disclosure to third parties or utilization of its contents – in whole or in parts – is forbidden without prior written consent of ABB.

© ABB 2019

3KXT221001R1001

DS/TTF300-EN Rev. F 02.2019