ABB MEASUREMENT & ANALYTICS | DATA SHEET

TTF300-W WirelessHART

Field-mount temperature transmitter

Measurement made easy

Wireless temperature measurement

WirelessHART (IEC 62591)

Power supply via standard lithium battery with long service life

Fast and easy commissioning

Intuitive and intelligent operating concept

Configuration directly on the LCD indicator without external Power supply

Approvals for explosion protection

- ATEX
- IECEx
- cFMus

Specification

Electromagnetic compatibility
Interference immunity in accordance with IEC/EN 61326-1 (industrial environment, influence < 1%)

Vibration resistance in accordance with IEC 60068-2-6
10 to 60 Hz 0.21 mm / 60 to 2000 Hz 3g

Humidity in accordance with IEC60068-2-30
95%

With integrated adjustable omnidirectional antenna
Range: up to 300 m (328 yds)

Wireless refresh rate
- Standard 16 seconds
- Can be configured between 4 seconds and 60 minutes

Transmission protocol
WirelessHART® Version 7 (IEEE 802.15.4-2006)

Frequency band
2.4 GHz (ISM-band, license-free)

Transmission power
max. 10 mW (10 dBm) EIRP

Minimum distance between antenna and persons
0.2 m (8 in)

User-defined configuration of Network ID & Join Key through LCD indicator with button operation or through EDD or DTM.

Ambient temperature
- −40 to 85 °C (−40 to 185 °F)
- optional −50 to 85 °C (−58 to 185 °F)
  (restricted range during operation with LCD indicator or with explosion-proof design)

Electrical connections
- Spring cage terminals
- Connection leads up to max. 1.5 mm^2 (AWG 16)

Material
- Aluminum, epoxy-coated
- Stainless steel

Color
gray RAL 9002

IP rating
IP 66 / IP 67

LCD indicator

In the connection head
For displaying measurement and status information
For on-site configuration
Automatic shutdown after 1 minute without activating the buttons (can be configured)
Manual reactivation via push buttons

Figure 1: LCD indicator

Power supply

Battery
Standard lithium battery (lithium content 5 g)
Service life of 5 years under the following reference conditions
- 25 °C (77 °F) ambient temperature
- Refresh rate 8 s
- Data forwarding of 3 additional network participants
- LCD off

... Specification

Input - resistance thermometer / resistances

Resistance thermometer

- Pt100 in accordance with IEC 60751, JIS C1604, MIL-T-24388
- Ni in accordance with DIN 43760
- Cu in accordance with recommendation OIML R 84

Resistance measurement

- 0 to 500 Ω
- 0 to 5000 Ω

Sensor connection type

Two-, three-, four-wire circuit

Connection lead

- Maximum sensor line resistance per line 50 Ω in accordance with NE 89
- Three-wire circuit: Symmetrical sensor line resistances
- Two-wire circuit: Compensation up to 100 Ω total lead resistance

Measurement current

< 300 µA

Sensor short circuit

< 5 Ω (for resistance thermometer)

Sensor wire break

- Measuring range: 0 to 500 Ω > 0.6 to 10 kΩ
- Measuring range: 0 to 5 Ω > 5.3 to 10 kΩ

Corrosion detection in accordance with NE 89

- Three-wire resistance measurement > 50 Ω
- Four-wire resistance measurement > 50 Ω

Sensor error signaling

- Resistance thermometer: Sensor short circuit and sensor wire break
- Linear resistance measurement: Sensor wire break

Input - thermocouples / voltages

Types

- B, E, J, K, N, R, S, T in accordance with IEC 60584
- U, L in accordance with DIN 43710
- C, D in accordance with ASTM E-988

Voltages

- −125 to 125 mV
- −125 to 1100 mV

Connection lead

- Maximum sensor line resistance 1.5 kΩ per wire, 3 kΩ in total

Sensor wire break monitoring in accordance with NE 89

- Pulsed with 1 µA outside measurement interval
- Thermocouple measurement 5.3 to 10 kΩ
- Voltage measurement 5.3 to 10 kΩ

Input resistance

> 10 MΩ

Internal reference junction

Pt1000, IEC 60751 Cl. B

Sensor error signaling

- Thermocouple: wire break
- Linear voltage measurement: wire break

Functionality input

Freestyle characteristic / 32-points-sampling point table

- Resistance measurement up to a maximum of 5 kΩ
- Voltages up to maximum 1.1 V

Sensor error adjustment

- Through Callendar-Van Dusen coefficients
- Through value table, 32 support points
- Through single-point adjustment (offset adjustment)
- Through two-point adjustment

Input functionality

- 1 Sensor
- 2 Sensors: mean measurement, differential measurement, sensor redundancy, Sensor drift monitoring

Measuring accuracy

Includes linearity error, repeatability / hysteresis at 23 °C (73.4 °F) ±5 K ambient temperature.
Information on measuring accuracy corresponds to 3 σ (Gaussian distribution).

Sensor		Measuring range limit	Minimum span	Digital measuring accuracy (24-bit AD-converter)
Resistance thermometer / resistor				
DIN IEC 60751	Pt10 (a=0.003850)	−200 to 850 °C	10 °C (18 °F)	±0.80 °C (±1.44 °F)
	Pt50 (a=0.003850)	(−328 to 1562 °F)		±0.16 °C (±0.29 °F)
	Pt100 (a=0.003850)**			±0.08 °C (±0.14 °F)
	Pt200 (a=0.003850)			± 0.24 °C (±0.43 °F)
	Pt500 (a=0.003850)			±0.16 °C (±0.29 °F)
	Pt1000 (a=0.003850)			±0.08 °C (±0.14 °F)
JIS C1604-89	Pt10 (a=0.003916)	−200 to 645 °C	10 °C (18 °F)	±0.80 °C (±1.44 °F)
	Pt50 (a=0.003916)			±0.16 °C (±0.29 °F)
	Pt100 (a=0.003916)			±0.08 °C (±0.14 °F)
MIL-T-24388	Pt10 (a=0.003920)	−200 to 850 °C	10 °C (18 °F)	±0.80 °C (±1.44 °F)
	Pt50 (a=0.003920)			±0.16 °C (±0.29 °F)
	Pt100 (a=0.003920)			±0.08 °C (±0.14 °F)
	Pt200 (a=0.003920)			± 0.24 °C (±0.43 °F)
	Pt1000 (a=0.003920)			±0.08 °C (±0.14 °F)
DIN 43760	Ni50 (a=0.006180)	−60 to 250 °C	10 °C (18 °F)	±0.16 °C (±0.29 °F)
	Ni100 (a=0.006180)			±0.08 °C (±0.14 °F)
	Ni120 (a=0.006180)			
	Ni1000 (a=0.006180)			
OIML R 84	Cu10 (a=0.004270)	−50 to 200 °C	10 °C (18 °F)	±0.80 °C (±1.44 °F)
	Cu100 (a=0.004270)			±0.08 °C (±0.14 °F)
	Resistance measurement	0 to 500 Ω	4 Ω	±32 mΩ
		0 to 5000 Ω	40 Ω	±320 mΩ
Thermocouples*** / voltages				
IEC 60584	Type K (Ni10Cr-Ni5)	−270 to 1372 °C (−454 to 2502 °F)	50 °C (90 °F)	±0.35 °C (±0.63 °F)
	Type J (Fe-Cu45Ni)	−210 to 1200 °C (−346 to 2192 °F)		
	Type N (Ni14CrSi-NiSi)	−270 to 1300 °C (−454 to 2372 °F)		
	Type T (Cu-Cu45Ni)	−270 to 400 °C (−454 to 752 °F)		
	Type E (Ni10Cr-Cu45Ni)	−270 to 1000 °C (−454 to 1832 °F)		
	Type R (Pt13Rh-Pt)	−50 to 1768 °C (-58 to 3215 °F)	100 °C (180 °F)	±0.95 °C (±1.71 °F)
	Type S (Pt10Rh-Pt)			
	Type B (Pt30Rh-Pt6Rh)	0 to 1820 °C (32 to 3308 °F)		
DIN 43710	Type L (Fe-CuNi)	−200 to 900 °C (−328 to 1652 °F)	50 °C (90 °F)	±0.35 °C (±0.63 °F)
	Type U (Cu-CuNi)	−200 to 600 °C (−328 to 1112 °F)		
ASTM E 988	Type C	0 to 2315 °C (32 to 4200 °F)	100 °C (180 °F)	±1.35 °C (±2.43 °F)
	Type D			
	Voltage measurement	−125 to 125 mV	2 mV	±12 µV
		−125 to 1100 mV	20 mV	±120 µV

Long-term drift: ±0.05 °C (±0.09 °F) or ±0.05 %* per year, the larger value applies.

* Percentages refer to the configured measuring span

** Standard Version

*** For digital measuring accuracy, the internal reference junction error must be added: Pt1000, DIN IEC 60751 Cl. B

... Specification

Operating influence

The percentages refer to the configured measuring span.

Ambient temperature effect: based on 23 °C (73.4 °F) for ambient temperature range −40 to 85 °C (−40 to 185 °F)**

Sensor		Ambient temperature effect per 1 °C (1.8 °F) deviation from 23 °C (73.4 °F) (digital measurement value)
Resistance thermometer for two-, three- and four-wire circuits		
IEC, JIS, MIL	Pt10	±0,04 °C (±0.072 °F)
	Pt50	±0.008 °C (±0.014 °F)
	Pt100	±0.004 °C (±0.007 °F)
IEC, MIL	Pt200	±0.02 °C (±0.036 °F)
	Pt500	±0.008 °C (±0.014 °F)
	Pt1000	±0.004 °C (±0.007 °F)
DIN 43760	Ni50	±0.008 °C (±0.014 °F)
	Ni100	±0.004 °C (±0.007 °F)
	Ni120	± 0.003 °C (± 0.005 °F)
	Ni1000	±0.004 °C (±0.007 °F)
OIML R 84	Cu10	±0,04 °C (±0.072 °F)
	Cu100	±0.004 °C (±0.007 °F)
Resistance measurement		
	0 to 500 Ω	±0.002 Ω
	0 to 5000 Ω	±0.02 Ω
Thermocouple, for all defined types		±[(0.001 % x (ME[mV] / MS[mv]) + (100 % x (0.009 °C / MS [°C]))*
Voltage measurement		
	−125 to 125 mV	±1.5 µV
	−125 to 1100 mV	±15 µV

* ME = voltage value of the thermocouple at the upper range value in accordance with the standard
MA = voltage value of the thermocouple at the start of the measuring range in accordance with the standard
MS = voltage value of the thermocouple over the measuring span in accordance with the standard. MS = (ME - MA)

** For the optional extended ambient temperature range of up to −50 °C (−58 °F), doubled influence values shall apply in the range of −50 to −40 °C (−58 to −40 °F).

Electrical connections

Resistance thermometers (RTD) / resistors (potentiometer)

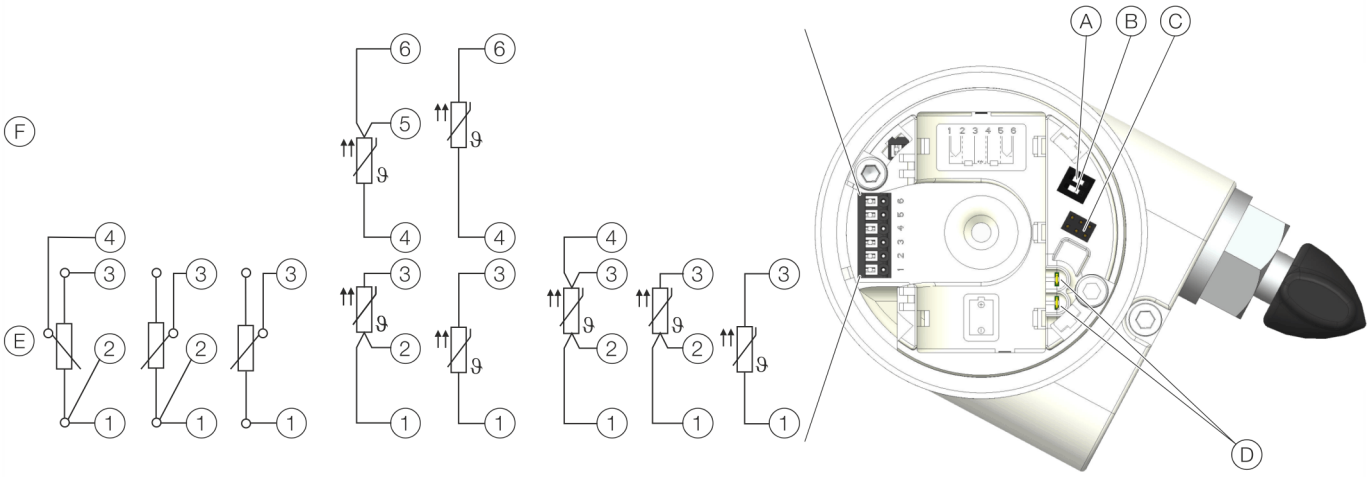

(A) DIP switch, hardware write protection
(B) DIP switch standby mode
(C) LCD indicator connection
(D) HART Maintenance Port (handheld terminal)
(E) Sensor 1
(F) Sensor 2
(1) – (6) Sensor connection (of measuring inset)

Figure 2: Terminal assignment resistance thermometer (RTD) / resistors (potentiometer)

Thermocouples / voltages and resistance thermometer (RTD) / thermocouple combinations

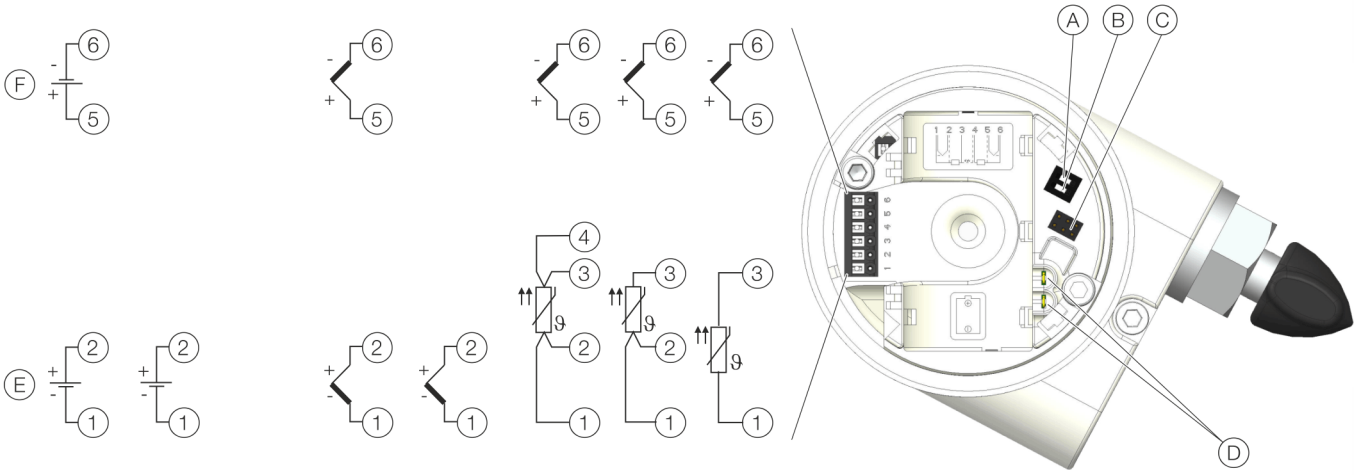

(A) DIP switch, hardware write protection
(B) DIP switch standby mode
(C) LCD indicator connection
(D) HART Maintenance Port (handheld terminal)
(E) Sensor 1
(F) Sensor 2
(1) – (6) Sensor connection (of measuring inset)

Figure 3: Terminal assignment thermocouples / voltages and resistance thermometer (RTD) / thermocouple combinations

Communication

Configuration parameters

- Sensor type, activation type
- Error signaling
- Measuring range
- General information, e.g. TAG number
- Damping
- Warning and alarm thresholds
- Output signal simulation
- Burst refresh rate
- Burst commands
- Network ID
- Join key
- Software write protection

Diagnostic information in accordance with NE 107
Standard:
- Sensor error signalling (wire break or short circuit)
- Device error
- Limit value up-scale / down-scale
- Measuring range up-scale / down-scale
- Simulation active

Advanced:
- Sensor redundancy / sensor backup active (sensor failure)
- Drift monitoring
- Sensor / Sensor connection lead corrosion
- Drag indicator for Sensor 1, Sensor 2 and ambient temperature
- Ambient temperature up-scaled
- Ambient temperature down-scaled
- Operating hours counter
- Wireless interface error
- Connection status
- Battery status

WirelessHART

The device is listed with the FieldComm Group.

Manufacturer-ID	0x1A
Device-ID	0x9B
Profile	HART® 7.5
Network ID	0xABB (2747 dec.)
Join Key	0x57495245 0x4c455353 0x4649454c 0x444b4559
Configuration	On device using LCD indicator DTM EDD

0x = hexadecimal

NOTICE
For data security reasons, we highly recommend that you change parameters Network ID and Join Key during commissioning.

Standard Burst Configuration	
Burst message 1	
HART® command	9 'device variables with status' PV, SV, TV, QV, battery life (days)
Update rate	16 seconds
Burst message 2	
HART® command	48 'extended device status'
Update rate	32 seconds

Dimensions

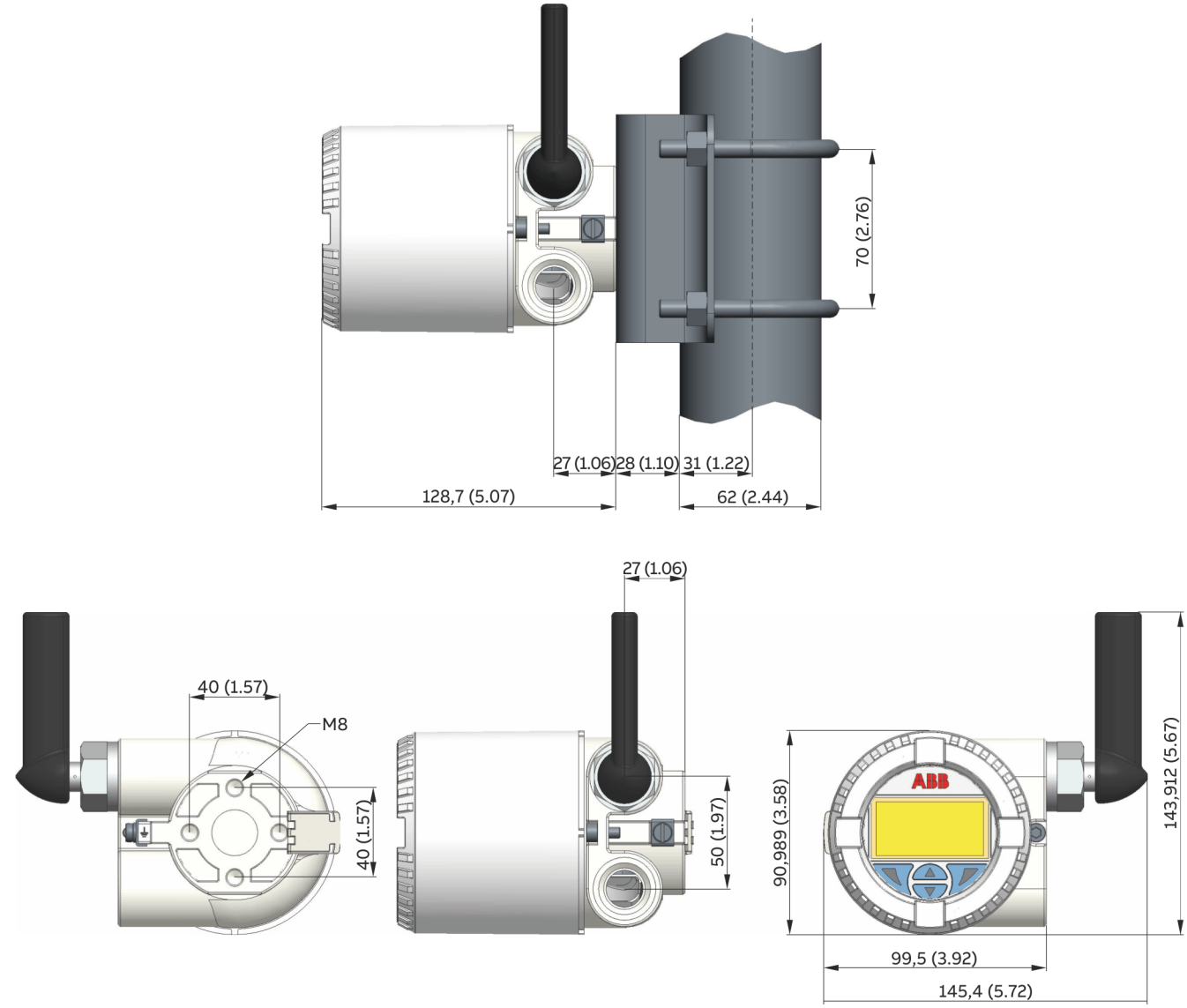

Figure 4: Dimensions in mm (in)

Wireless operation approvals

Telecommunications directive

Any device used for wireless applications must be certified in accordance with the telecommunications directives applicable for the operating location. This certification is country-specific. Before commissioning, you must make sure that local restrictions are complied with.

European directives

Radio Equipment Directive 2014/53/EU

Within Europe, use of the 2400 - 2483.5 MHz frequency band is not harmonized. Country-specific regulations must therefore be observed.

Restrictions for Norway

Operation not permitted within a radius of 20 km around Ny-Alesund in Svalbard. For more information, see www.npt.no, the Norway Posts and Telecommunications website.

USA / Canada directives

FCC Part 15.247:2009 (USA)
IC RSS-210 and ICES-003 (Canada)

Use in potentially explosive atmospheres in accordance with ATEX and IECEx

Note

- Further information on the approval of devices for use in potentially explosive atmospheres can be found in the explosion protection test certificates (at www.abb.com/wirelessmeasurement).
- Depending on the design, a specific marking in accordance with ATEX or IECEx applies.

Ex marking

Transmitter

Model TTF300-W-A6..., TTF300-W-H6... **(Transmitter in zone 0, 1 or 2)**	
ATEX	**IECEx**
II 1 G Ex ia IIC T4...T1 Ga	Ex ia IIC T4...T1 Ga
Certificate no.:	Certificate no.:
PTB 14 ATEX 2010X	PTB 15.0009X
• The transmitter and the connected temperature sensor may be used fully in zone 0, zone 1 or zone 2.	
• The temperature range corresponds to the information in **Temperature data** on page 11	

LCD indicator

The device is supplied with or without an LCD indicator (order option "Housing / Indicators").
The LCD indicator has the following certificates:

ATEX	**IECEx**
Certificate no.:	Certificate no.:
PTB 05 ATEX 2079X	IECEx PTB 12.0028X

Temperature data

Standard design in potentially explosive atmospheres

Ambient temperature range $T_{amb.}$	
Zone 1	−40 ... +70 °C (−40 ... +158 °F)
Zone 0 (With consideration of EN1127-1)	T4: −40 ... +43 °C (−40 ... +110 °F) T1 ... T3: −40 ... +70 °C (−40 ... +158 °F)

"Extended ambient temperature range (order option SE)" design in potentially explosive atmospheres

Ambient temperature range $T_{amb.}$	
Zone 1	−50 ... +70 °C (−58 ... +158 °F)
Zone 0 (With consideration of EN1127-1)	T4: −50 ... +43 °C (−58 ... +110 °F) T1 ... T3: −50 ... +70 °C (−58 ... +158 °F)

Electrical data

Sensor inputs

	Resistance thermometer, resistors	**Thermocouples, voltages**
Maximum voltage	U_{oWi} = 5,4 V	U_o = 1,2 V
Short-circuit current	I_o = 25 mA	I_o = 50 mA
Maximum power	P_o = 34 mW	P_o = 60 mW
Internal inductance	L_i = 0 mH	L_i = 0 mH
Internal capacitance	C_i = 49 nF	C_i = 49 nF
Maximum permissible external inductance IIC	L_o = 5 mH	L_o = 5 mH
Maximum permissible external capacitance IIC	C_o = 2,25 µF	C_o = 1,45 µF

HART Maintenance Port

	HART Maintenance Port on TTF300-W	**Maximum external connection values**
Maximum voltage	U_o = 5,4 V	U_i = 2,6 V
Short-circuit current	I_o = 25 mA	I_i = 25 mA
Maximum power	P_o = 34 mW	—
Inductance	L_i = 0 mH	L_o = 1 mH (IIC)
Capacitance	C_i =1,2 µF	C_o = 0,4 µF (IIC)

Use in potentially explosive atmospheres in accordance with cFMus

Note

- Further information on the approval of devices for use in potentially explosive atmospheres can be found in the explosion protection test certificates (at www.abb.com/wirelessmeasurement).
- Depending on the design, a specific marking in accordance with cFMus applies.

Transmitter Ex marking

FM USA Intrinsically Safe

Model TTF300-W-L9	
Control Drawing	3KXT221300B0001
Class I, Div. 1, Groups A, B, C, D T4	
Class I, Zone 0, AEx ia IIC T4	

FM Canada Intrinsically Safe

Model TTF300-W-R9	
Control Drawing	3KXT221300B0001
Class I, Div. 1, Groups A, B, C, D T4	
Class I, Zone 0, Ex ia IIC T4	

Ordering Information

Ordering information TTF300-W

Base model	**TTF300-W**	**XX**	**X**	**X**	**X**	**XX**
TTF300-W Field Mounted Temperature Transmitter, WirelessHART						
Explosion Protection						
Without explosion protection		Y0				
ATEX Intrinsic Safety type of protection: Zone 0: II 1 G Ex ia IIC T4		A6				
IECEx Intrinsic Safety type of protection: Zone 0: Ex ia IIC T4		H6				
FM US Intrinsic Safety type of protection: Class I, DIV 1, Groups A, B, C, D, T4. Class I, Zone 0, AEx ia IIC T4		L9				
FM CA Intrinsic Safety type of protection: Class I, DIV 1, Groups A, B, C, D, T4, Class I, Zone 0, Ex ia IIC T4		R9				
Housing / Indicator						
Single-compartment housing (aluminum) / Without indicator			A			
Single-compartment housing (stainless steel) / Without indicator			B			
Single-compartment housing (aluminum) / With LCD indicator HMI			C			
Single-compartment housing (stainless steel) / With LCD indicator HMI			D			
Cable Entry						
Thread 1 × M20 × 1.5				5		
Thread 1 × ½ in NPT				6		
Thread 1 x ¾ in NPT, via ½ in > ¾ adapter, only available with Housing (aluminum)				7		
Cable gland 1 x M20 × 1.5 (limited temperature range)				8		
Communication Protocol						
WirelessHART					W	
Configuration						
Standard configuration						BS
Customer-specific configuration, except user curve						BF*
Customer-specific configuration, including user curve						BG

* E.g. set measuring range, TAG no.

... Ordering Information

Additional ordering information TTF300-W

	XX	XX	XXX	XX	XX	XX	XX	XX	XX
Certificates									
Declaration of compliance with the order 2.1 acc. EN 10204	C4								
Inspection certificate 3.1 acc. EN 10204 of visual, dimensional and functional test	C6								
Calibration Certificates									
With 5-point factory certificate		EM							
Inspection certificate 3.1 acc. EN 10204 of 5-point calibration		EP							
Handling of Certificates									
Send via e-mail			GHE						
Send via mail			GHP						
Send via mail express			GHD						
Send with instrument			GHA						
Only archived			GHS						
Mounting Bracket									
Wall mounting / 2 in. pipe mounting bracket (stainless steel)				K2					
Extended Ambient Temperature Range									
−50 to 85 °C (−58 to 185 °F)					SE				
Device Identification Plate									
Stainless steel						T0			
Additional Tag Plate									
Stainless steel							I1		
Customer-specific Versions									
(Please specify)								Z9	
Documentation Language									
German									M1
English									M5
Language package Western Europe / Scandinavia (Languages: DA, ES, FR, IT, NL, PT, FI, SV)									MW
Language package Eastern Europe (Languages: EL, CS, ET, LV, LT, HU, HR, PL, SK, SL, RO, BG)									ME

Accessories	Catalog No.
Lithium battery	3KXT000029U0000
TTF300-W commissioning instruction, German	3KXT221300R4403
TTF300-W commissioning instruction, English	3KXT221300R4401
TTF300-W commissioning instruction, Language package Western Europe / Scandinavia	3KXT221300R4493
TTF300-W commissioning instruction, Language package Eastern Europe	3KXT221300R4494
TTF300-W documentation CD-ROM	3KXT221300R0800

Trademarks

WirelessHART is a registered trademark of FieldComm Group, Austin, Texas, USA

Order form configuration

WirelessHART: Data relating to customer-specific configuration

Configuration		Selection
Number of sensors		☐ 1 sensor (standard) ☐ 2 sensors
Measurement type (for 2-sensor selection only)		☐ Sensor redundancy / sensor backup ☐ Sensor drift monitoring ____°C / K sensor drift difference ____s time limit for drift overshoot ☐ Difference measurement ☐ Average measurement
IEC 60751 JIS C1604-89 MIL-T-24388 DIN 43760 Cu	Resistance thermometer	☐ Pt10 ☐ Pt50 ☐ Pt100 (Standard) ☐ Pt200 ☐ Pt500 ☐ Pt1000 ☐ Pt10 ☐ Pt50 ☐ Pt100 ☐ Pt10 ☐ Pt50 ☐ Pt100 ☐ Pt200 ☐ Pt1000 ☐ Ni50 ☐ Ni100 ☐ Ni120 ☐ Ni1000 ☐ Cu10 ☐ Cu100
	Resistance measurement	☐ 0 to 500 Ω ☐ 0 to 5000 Ω
IEC 60584 DIN 43710 ASTM E-988	Thermocouple	☐ Type K ☐ Type J ☐ Type N ☐ Type R ☐ Type S ☐ Type T ☐ Type E ☐ Type B ☐ Type L ☐ Type U ☐ Type C ☐ Type D
	Voltage measurement	☐ –125 to 125 mV ☐ –125 to 1100 mV
Sensor connection type (for resistance thermometer and resistance measurement only)		☐ Two-wire ☐ Three-wire (standard) ☐ Four-wire Two-wire circuit: Compensation of sensor-wire resistance max. 100 Ω ☐ Sensor 1: ____ Ω ☐ Sensor 2: ____ Ω
Reference junction (for thermocouples only)		☐ Internal (for standard thermocouple, except type B) ☐ None (type B) ☐ External / temperature: ____°C
Unit		☐ Celsius (default) ☐ Fahrenheit ☐ Rankine ☐ Kelvin
Sensor number		☐ Sensor 1: _____ ☐ Sensor 2: _____
Resistor value at 0 °C / R_0 Callendar-Van Dusen coefficient A Callendar-Van Dusen coefficient B Callendar-Van Dusen coefficient C (optional, for resistance thermometers only)		Sensor 1: R_0: _____ Sensor 2: R_0: _____ A: _____ A: _____ B: _____ B: _____ C: _____ C: _____
User characteristics based on linearization table		☐ Based on attached table of variate pairs
Software write protection		☐ Off (standard) ☐ On
TAG number		☐ _____
Long TAG number		☐ _____
Network ID		☐ Hexadecimal value ABB standard or _____
Join key		☐ Hexadecimal value ABB standard or _____ ☐ Hexadecimal value ABB standard or _____ ☐ Hexadecimal value ABB standard or _____ ☐ Hexadecimal value ABB standard or _____
Burst message 1	HART command	☐ 3 'Dynamic HART variables' ☐ 9 'Device variables with status' (ABB-Standard)
	Update rate	☐ 4 seconds ☐ 8 seconds ☐ 16 seconds ☐ 32 seconds ☐ 60 to 3600 seconds _____

Castel Maggiore (BO) 40013
Via Lirone 60/i

e-mail: info@eurotecsrl.com
Tel: +39 051/6321595
Website: www.eurotecsrl.com

C.F.: 04103780377
P.I.: 01596581205

ABB Limited
Measurement & Analytics
Howard Road, St. Neots
Cambridgeshire, PE19 8EU
UK
Tel: +44 (0)870 600 6122
Fax: +44 (0)1480 213 339
Email: enquiries.mp.uk@gb.abb.com

ABB Inc.
Measurement & Analytics
125 E. County Line Road
Warminster, PA 18974
USA
Tel: +1 215 674 6000
Fax: +1 215 674 7183

ABB Automation Products GmbH
Measurement & Analytics
Schillerstr. 72
32425 Minden
Germany
Tel: +49 571 830-0
Fax: +49 571 830-1806

abb.com/wirelessmeasurement

We reserve the right to make technical changes or modify the contents of this document without prior notice. With regard to purchase orders, the agreed particulars shall prevail.
ABB does not accept any responsibility whatsoever for potential errors or possible lack of information in this document.

We reserve all rights in this document and in the subject matter and illustrations contained therein. Any reproduction, disclosure to third parties or utilization of its contents – in whole or in parts – is forbidden without prior written consent of ABB.

© ABB 2019

3KXT221300R1001

DS/TTF300-W-EN Rev. C 08.2019