ABB MEASUREMENT & ANALYTICS | DATA SHEET

TTF200

Field-mount temperature transmitter

Measurement made easy

Temperature transmitter for HART protocol.
Suitable for all standard requirements.

Input circuit and communication

- Universal sensor input for resistance thermometer (RTD) and thermocouples
- Communication via a 4 to 20 mA signal and the HART protocol.

Safety

- Global approvals for explosion protection up to Zone 0
- Functional safety SIL 2 / SIL 3 in accordance with IEC 61508
- Device versioning in accordance with NE 53
- Continuous monitoring of supply voltage
- Wire break / corrosion monitoring in accordance with NE 89

Also for use in harsh environments

- Housing from aluminum or stainless steel
- Housing protection IP 66 and IP 67, NEMA 4X, ENCL 4X

Use

- Configuration in accordance with FDT / DTM, EDD or FDI Standard (Field Information Manager, FIM)
- Turnable LCD indicator for optimal readability (option)

Specification

CE Marking
The device fulfills all requirements for CE marking in accordance with all applicable guidelines.

Electrical isolation
3.5 kV DC (approx. 2.5 kV AC), 60 s, input to output

MTBF (Mean Time Between Failures)
190 years at 40 °C (104 °F) mean ambient temperature

Input filter
50 / 60 Hz

Switch-on delay
< 10 s (I_a ≤ 3.6 mA during switch-on cycle)

Warm-up time
5 minutes

Rise time t90
400 to 1000 ms

Measured value update
10/s, independent of sensor type and sensor circuit

Output filter
Digital filter 1st order: 0 to 100 s

Weight
- Die-cast aluminum: 1.25 kg (2.75 lb)
- Stainless steel: 2.75 kg (6.10 lb)

Housing material
- Die-cast aluminum, epoxy coated, color gray RAL9002
- Stainless steel

Encapsulation resin for the device
Polyurethane (PUR), WEVO PU-417

Installation conditions
Mounting position: no restrictions

Electrical connection
- Thread (selectable) 2 × M20 × 1.5 / 2 × ½ in NPT / 2 × ¾ in NPT (using reducing piece),
- Ground screw external 6 mm^2, M5 internal 2 × 2.5 mm^2, M4 terminals for lines up to 2.5 mm^2 and handheld terminal interface

Plastic cable gland 2 × M20 1.5:
- Cable outer diameter 6 to 12 mm (0.24 to 0.47 in), Ex: 5 to 10 mm (0.20 to 0.39 in)
- Temperature range −30 to 80 °C (−22 to 176 °F), Ex: −20 to 80 °C (-4 to 176 °F)
- For Non-Ex: Polyamide gray
- For intrinsically safe design: Polyamide blue

Metal cable gland (2 × M20 × 1.5 / 2 × ½ in NPT):
- Flameproof (enclosure), explosionproof
- Cable outside diameter: 3.2 to 8.7 mm (0.13 to 0.34 in)
- Temperature range: −40 to 85 °C (−40 to 185 °F)

Additional cable outer diameters upon request

Lightning protection
- for cable gland M20 × 1.5 (see data sheet 10/63-6.15)
- Non-Ex: type NGV220-NO
- Intrinsic safety: type NGV220-EX

Dimensions
Refer to **Dimensions** on page 13.

… Specification

Ambient conditions

Ambient temperature
- Standard: −40 to 85 °C (−40 to 185 °F)
- Restricted range during operation with LCD indicator: −20 to 70 °C (−4 to 158 °F)
- Restricted range during operation with explosion-proof design: see corresponding certificate

Transport / Storage temperature
−50 to 85 °C (−58 to 185 °F)

Climate class in accordance with DIN EN 60654-1
Cx −40 to 85 °C (−40 to 185 °F) at 5 to 95 % relative air humidity

Max. permissible humidity in accordance with IEC 60068-2-30
100 % relative air humidity

Vibration resistance in accordance with IEC 60068-2-6
10 to 2000 Hz at 5 g, during operation and transport

Shock resistance in accordance with IEC 68-2-27
gn = 30, during operation and transport

IP rating
IP 66 and IP 67, NEMA 4X, ENCL 4X

Electromagnetic compatibility

Emitted interference in accordance with IEC EN 61326 and Namur NE 21.

Interference-resistant in accordance with IEC 61326 and Namur NE 21.
Pt100: measuring range 0 to 100 °C (32 to 212 °F), span 100 K

Type of test	Testing accuracy	Effect
Burst to signal- / data lines	2 kV	< 0.5 %
Static discharge		
• Contact plate (indirect)	8 kV	No
• Supply terminals*	6 kV	No
• Sensor terminals*	4 kV	No
Radiated field		
80 MHz to 2 GHz	10 V/m	< 0.5 %
Coupling		
150 kHz to 80 MHz	10 V	< 0.5 %
Surge		
between the supply lines	0.5 kV	No malfunction
Line to ground	1 kV	

* Air discharge (at 1 mm (0.04 in) distance)

SIL functional safety

With conformity according to IEC 61508 for the use in safety relevant applications up to and including SIL 3 (redundant).
- In the use of one transmitter the device fulfills the requirements according to SIL 2.
- In the use of redundant handled transmitters the requirements can be fulfilled according to SIL 3.

Instructions on this can be found in the SIL-Safety Manual.

Type BS LCD indicator

Figure 1: Type BS LCD indicator

CE Marking
The Type BS LCD indicator fulfills all requirements for CE marking in accordance with all applicable guidelines.

Properties
Transmitter-controlled graphic (alpha-numerical) LCD indicator without configuration function
- Character height, mode-dependent
- Sign, 4 digits, 2 decimal places

Display options
- Process value sensor
- Bargraph
- Output %
- Display diagnostic information related to transmitter and sensor status

Temperature range
20 to 70 °C (−4 to 158 °F)

Restricted display function (contrast, reaction time) in the temperature ranges:
- −40 to −20 °C (−40 to −4 °F)
  or
- 70 to 85 °C (158 to 185 °F)

Air humidity
0 to 100 %, condensation permitted

Input - resistance thermometer / resistances

Resistance thermometer
- Pt100 in accordance with IEC 60751, JIS C1604, MIL-T-24388
- Ni in accordance with DIN 43760
- Cu in accordance with recommendation OIML R 84

Resistance measurement
- 0 to 500 Ω
- 0 to 5000 Ω

Sensor connection type
Two-, three-, four-wire circuit

Connection lead
- Maximum sensor line resistance
  per line 50 Ω in accordance with NE 89
- Three-wire circuit:
  Symmetrical sensor line resistances
- Two-wire circuit:
  Compensation up to 100 Ω total lead resistance

Measurement current
< 300 µA

Sensor short circuit
< 5 Ω (for resistance thermometer)

Sensor wire break
- Measuring range: 0 to 500 Ω > 0.6 to 10 kΩ
- Measuring range: 0 to 5 Ω > 5.3 to 10 kΩ

Corrosion detection in accordance with NE 89
- Three-wire resistance measurement > 50 Ω
- Four-wire resistance measurement > 50 Ω

Sensor error signaling
- Resistance thermometer:
  Sensor short circuit and sensor wire break
- Linear resistance measurement:
  Sensor wire break

... Specification

Input - thermocouples / voltages

Types
- B, E, J, K, N, R, S, T in accordance with IEC 60584
- U, L in accordance with DIN 43710
- C, D in accordance with ASTM E-988

Voltages
- −125 to 125 mV
- −125 to 1100 mV

Connection lead
- Maximum sensor line resistance:
  per line 1.5 kΩ, total 3 kΩ

Sensor wire break monitoring in accordance with NE 89
- Pulsed with 1 µA outside measurement interval
- Thermocouple measurement 5.3 to 10 kΩ
- Voltage measurement 5.3 to 10 kΩ

Input resistance
> 10 MΩ

Internal reference junction Pt1000, IEC 60751 Cl. B
(no additional jumpers necessary)

Sensor error signaling
- Thermocouple:
  Sensor wire break
- Linear voltage measurement:
  Sensor wire break

Output

Transmission characteristics
- Temperature linear
- Resistance linear
- Voltage linear

Output signal
- Configurable 4 to 20 mA (standard)
- Configurable 20 to 4 mA
  (Dynamic range: 3.8 to 20.5 mA in accordance with NE 43)

Simulation mode
3.5 to 23.6 mA

Induced current consumption
< 3.5 mA

Maximum output current
23.6 mA

Configurable error current signal
- Overrange 22 mA (20.0 to 23.6 mA)
- Underrange 3.6 mA (3.5 to 4.0 mA)

Power supply

Two-wire technology, polarity safe; power supply lines = signal lines

Note
Following calculations apply for standard applications. This should be taken into consideration when working with a higher maximum current.

Input terminal voltage
Non-Ex application:
U_S = 11 to 42 V DC
Ex applications:
U_S = 11 to 30 V DC

Maximum permissible residual ripple for input terminal voltage
During communication, this is in accordance with the HART® FSK 'Physical Layer' specification.

Undervoltage detection on the transmitter
If the terminal voltage on the transmitter down-scales a value of 10 V, this may lead to an output current of $I_a \leq 3.6$ mA.

Maximum load
$R_B = (U_S - 11\ V) / 0.022\ A$

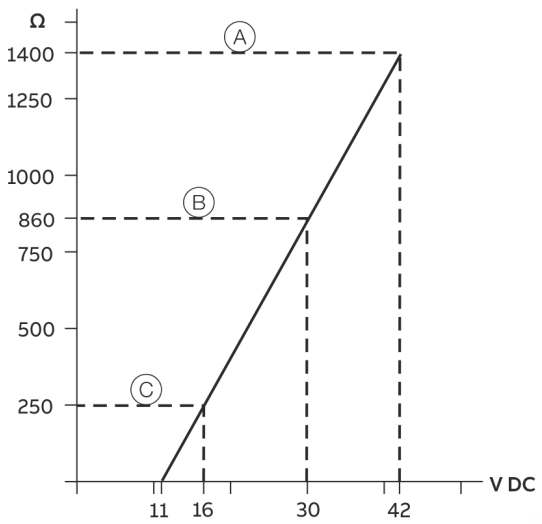

(A) **TTF200**
(B) **TTF200** in Ex-applications
(C) HART® communication resistance (R_B)

Figure 2: Maximum load depending on input terminal voltage

Maximum power
- $P = U_s \times 0.022\ A$
- Example: $U_s = 24\ V \rightarrow P_{max} = 0.528\ W$

... Specification

Measuring accuracy

Includes linearity error, repeatability / hysteresis at 23 °C (73.4 °F) ± 5 K and 20 V supply voltage.
Information on measuring accuracy corresponds to 3 σ (Gaussian distribution).
Long-term drift: ±0.05 °C (±0.09 °F) or ±0.05 %* per year, the larger value applies.

Sensor		Measuring range limit	Minimum span	Measuring accuracy	
				Input (24-Bit A / D-converter)	Analog output* (16-Bit D / A-converter)
Resistance thermometer / resistor					
DIN IEC 60751	Pt10 (a=0.003850)	−200 to 850 °C (−328 to 1562 °F)	10 °C (18 °F)	±0,80 °C (±1.44 °F)	±0,05 %
	Pt50 (a=0.003850)			±0,16 °C (±0.29 °F)	±0,05 %
	Pt100 (a=0.003850)**			±0,10 °C (±0.18 °F)	±0,05 %
	Pt200 (a=0.003850)			±0,24 °C (±0.43 °F)	±0,05 %
	Pt500 (a=0.003850)			±0,16 °C (±0.29 °F)	±0,05 %
	Pt1000 (a=0.003850)			±0,10 °C (±0.18 °F)	±0,05 %
JIS C1604	Pt10 (a=0.003916)	−200 to 645 °C (−328 to 1193 °F)	10 °C (18 °F)	±0,80 °C (±1.44 °F)	±0,05 %
	Pt50 (a=0.003916)			±0,16 °C (±0.29 °F)	±0,05 %
	Pt100 (a=0.003916)			±0,10 °C (±0.18 °F)	±0,05 %
MIL-T-24388	Pt10 (a=0.003920)	−200 to 850 °C (−328 to 1562 °F)	10 °C (18 °F)	±0,80 °C (±1.44 °F)	±0,05 %
	Pt50 (a=0.003920)			±0,16 °C (±0.29 °F)	±0,05 %
	Pt100 (a=0.003920)			±0,10 °C (±0.18 °F)	±0,05 %
	Pt200 (a=0.003920)			±0,24 °C (±0.43 °F)	±0,05 %
	Pt1000 (a=0.003920)			±0,10 °C (±0.18 °F)	±0,05 %
DIN 43760	Ni50 (a=0.006180)	−60 to 250 °C (−76 to 482 °F)	10 °C (18 °F)	±0,16 °C (±0.29 °F)	±0,05 %
	Ni100 (a=0.006180)			±0,10 °C (±0.18 °F)	±0,05 %
	Ni120 (a=0.006180)				±0,05 %
	Ni1000 (a=0.006180)				±0,05 %
OIML R 84	Cu10 (a=0.004270)	−50 to 200 °C (−58 to 392 °F)	10 °C (18 °F)	±0,80 °C (±1.44 °F)	±0,05 %
	Cu100 (a=0.004270)			±0,10 °C (±0.18 °F)	±0,05 %
	Resistance measurement	0 to 500 Ω	4 Ω	±32 mΩ	±0,05 %
		0 to 5000 Ω	40 Ω	±320 mΩ	±0,05 %

* Percentages refer to the configured measuring span

** Standard Version

Sensor		Measuring range limit	Minimum span	Measuring accuracy	
				Input	Analog output*
				(24-Bit A / D-converter)	(16-Bit D / A-converter)
Thermocouples / voltages**					
IEC 60584	Type K (Ni10Cr-Ni5)	−270 to 1372 °C (−454 to 2502 °F)	50 °C (90 °F)	±0,35 °C (±0.63 °F)	±0,05 %
	Type J (Fe-Cu45Ni)	−210 to 1200 °C (−346 to 2192 °F)			±0,05 %
	Type N (Ni14CrSi-NiSi)	−270 to 1300 °C (−454 to 2372 °F)			±0,05 %
	Type T (Cu-Cu45Ni)	−270 to 400 °C (−454 to 752 °F)			±0,05 %
	Type E (Ni10Cr-Cu45Ni)	−270 to 1000 °C (−454 to 1832 °F)			±0,05 %
	Type R (Pt13Rh-Pt)	−50 to 1768 °C (−58 to 3215 °F)	100 °C (180 °F)	±0,95 °C (±1.71 °F)	±0,05 %
	Type S (Pt10Rh-Pt)				±0,05 %
	Type B (Pt30Rh-Pt6Rh)	−0 to 1820 °C (32 to 3308 °F)			±0,05 %
DIN 43710	Type L (Fe-CuNi)	−200 to 900 °C (−328 to 1652 °F)	50 °C (90 °F)	±0,35 °C (±0.63 °F)	±0,05 %
	Type U (Cu-CuNi)	−200 to 600 °C (−328 to 1112 °F)			±0,05 %
ASTM E 988	Type C	−0 to 2315 °C (32 to 4200 °F)	100 °C (180 °F)	±1,35 °C (±2.43 °F)	±0,05 %
	Type D				±0,05 %
Voltage measurement		−125 to 125 mV	2 mV	± 12 µV	±0,05 %
		−125 to 1100 mV	20 mV	± 120 µV	±0,05 %

* Percentages refer to the configured measuring span

** For digital measuring accuracy, the internal reference junction error must be added: Pt1000, DIN IEC 60751 Cl. B

... Specification

Operating influence

The percentages refer to the configured measuring span.

Input terminal voltage effect / load effect:
Within the specified limit values for the voltage / load, the total influence is less than 0.001 % per volt.

Normal-mode rejection ratio:
> 65 dB at 50 / 60 Hz
Common-mode rejection ratio:
> 120 dB at 50 / 60 Hz

Ambient temperature influence:
Based on 23 °C (73.4 °F) for ambient temperature range −40 to 85 °C (−40 to 185 °F)

Sensor		**Ambient temperature effect per 1 °C (1.8 °F) deviation from 23 °C (73.4 °F)**	
		Input (24-Bit A / D-converter)	**Analog output* (16-Bit D / A-converter)**
Resistance thermometer, two-, three-, four-wire-circuit			
IEC, JIS, MIL	Pt10	±0,04 °C (±0.072 °F)	±0,003 %
	Pt50	±0.008 °C (±0.014 °F)	±0,003 %
	Pt100	±0.004 °C (±0.007 °F)	±0,003 %
IEC, MIL	Pt200	±0,02 °C (±0.036 °F)	±0,003 %
	Pt500	±0.008 °C (±0.014 °F)	±0,003 %
	Pt1000	±0.004 °C (±0.007 °F)	±0,003 %
DIN 43760	Ni50	±0.008 °C (±0.014 °F)	±0,003 %
	Ni100	±0.004 °C (±0.007 °F)	±0,003 %
	Ni120	±0.003 °C (±0.005 °F)	±0,003 %
	Ni1000	±0.004 °C (±0.007 °F)	±0,003 %
OIML R 84	Cu10	±0,04 °C (±0.072 °F)	±0,003 %
	Cu100	±0.004 °C (±0.007 °F)	±0,003 %
Resistance measurement			
	0 to 500 Ω	± 0.002 Ω	±0,003 %
	0 to 5000 Ω	± 0.02 Ω	±0,003 %
Thermocouple, for all defined types			
		±[(0.001 % × (ME[mV] / MS[mv]) + (100 % × (0.009 °C / MS [°C])]**	±0,003 %
Voltage measurement			
	−125 to 125 mV	± 1.5 µV	±0,003 %
	−125 to 1100 mV	± 15 µV	±0,003 %

* Percentages refer to the configured measuring span of the analog output signal

** ME = voltage value of the thermocouple at the upper range value in accordance with the standard
MA = voltage value of the thermocouple at the lower range value in accordance with the standard
MS = voltage value of the thermocouple over the measuring span in accordance with the standard. MS = (ME - MA)

Electrical connections

Pin assignment

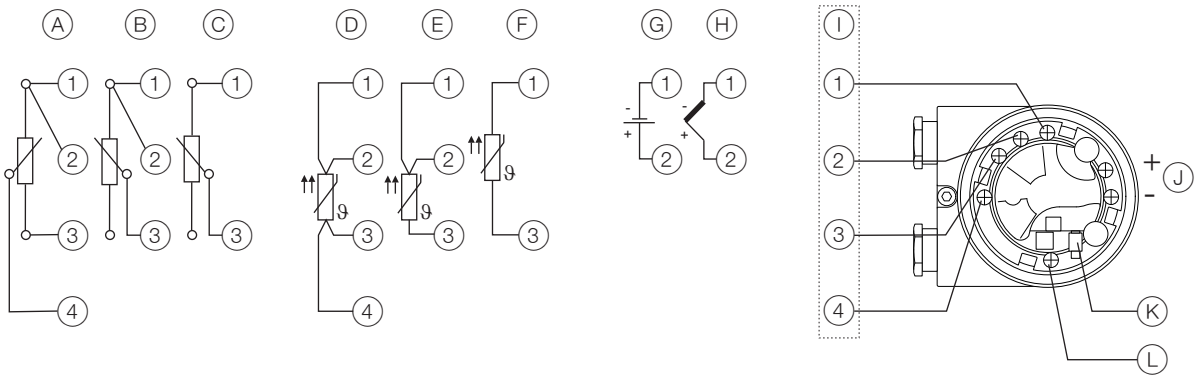

- (A) Potentiometer, four-wire circuit
- (B) Potentiometer, three-wire circuit
- (C) Potentiometer, two-wire circuit
- (D) RTD, four-wire circuit
- (E) RTD, three-wire circuit
- (F) RTD, two-wire circuit
- (G) Voltage measurement
- (H) Thermocouple
- (I) Sensor terminals (of measuring inset)
- (J) 4 to 20 mA HART®
- (K) Interface for Type BS LCD indicators
- (L) Ground terminals for sensor and supply- / signal cable shielding connection

Figure 3: TTF200 terminals

Communication

Configuration parameters

Measurement type
- Sensor type, connection type
- Error signaling
- Measuring range
- General information, e.g. TAG number
- Damping
- Output signal simulation

For details, see **Order form configuration** on page 18.

Write protection
Software write protection

Diagnostic information in accordance with NE 107
- Sensor error signalling
  (wire break or short-circuit)
- Device error
- Limit value up- / down-scaled
- Upper range up- / down-scaled
- Simulation active

HART® Communication

The device is listed with the FieldComm Group.

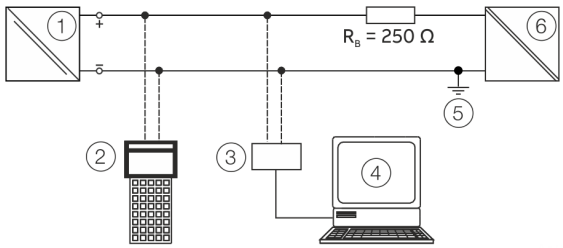

1 Transmitter
2 Handheld terminal
3 HART® modem
4 PC with Asset Management Tool
5 Grounding (optional)
6 Power supply unit (process interface)
R_B load resistance (if necessary)

Figure 4: Example for HART connection

Manufacturer ID	0x1A
Device Type ID	0x0D
Profile	HART® 5.1
Configuration	DTM, EDD, FDI (FIM)
Transmission signal	BELL Standard 202

Operating modes
- Point-to-point communication mode – standard (general address 0)
- Multidrop mode (addressing 1 to 15)
- Burst Mode

Diagnosis notice
- Overrange / underrange in accordance with NE 43
- HART® diagnosis

Configuration options / tools
- Device management / Asset management tools
- FDT technology – via TTX200-DTM driver
  (Asset Vision Basic / DAT200)
- EDD – via TTX200 EDD driver
  (Handheld terminal, Field Information Manager / FIM)
- FDI technology – via TTX200 Package
  (Field Information Manager / FIM)

Dimensions

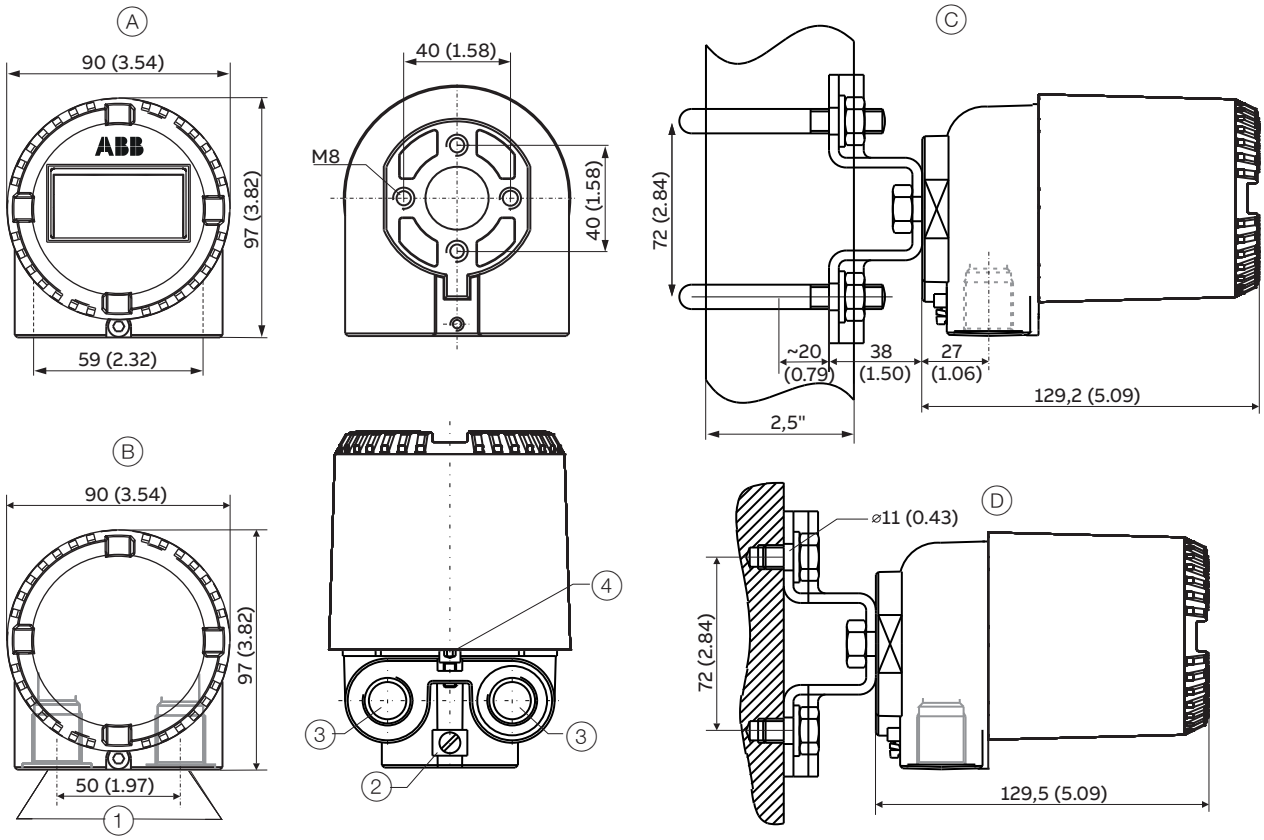

(A) Housing with display window for indicator
(B) Closed housing
(C) Pipe mounting
(D) Wall mounting, 4-hole wall attachment, Ø 11 mm (0.43 in) quadratically arranged, at distance of 72 mm (2.84 in)

(1) Electrical connections
(2) M5 potential equalization screw
(3) Thread M20 × 1.5 or ½ in NPT
(4) Locking screw

Figure 5: Dimensions in mm (in)

Use in potentially explosive atmospheres in accordance with ATEX and IECEx

Note

- Further information on the approval of devices for use in potentially explosive atmospheres can be found in the explosion protection test certificates (at www.abb.com/temperature).
- Depending on the design, a specific marking in accordance with ATEX or IECEx applies.
- In devices with combined types of protection, for example TTF200-E4, observe the 'Product Identification' chapter in the operating or commissioning instruction before commissioning.

Ex marking

Transmitter

ATEX intrinsic safety

The device fulfills the requirements of Directive 2014/34/EU in case of corresponding purchase orders and is approved for use in Zone 0, 1 and 2.

Model TTF200-E1	
Type Examination Test Certificate	PTB 05 ATEX 2017 X
II 1 G Ex ia IIC T6 Ga	
II 2 (1) G Ex [ia IIC Ga] ib IIC T6 Gb	
II 2 G (1D) Ex [ia IIIC Da] ib IIC T6 Gb	

ATEX flameproof (enclosure)

Approved for use in Zone 1 and 2.

Model TTF200-E3	
Type Examination Test Certificate	PTB 99 ATEX 1144 X
II 2G Ex db IIC T6/T4 Gb	

ATEX flameproof (enclosure) and intrinsic safety

Approved for use in Zone 1 and 2, in case of intrinsic safety also for use in Zone 0.

The 'E4' coding combines the following types of protection: 'Intrinsic safety', (TTF200-E1) and 'Flameproof (enclosure)', (TTF200-E3). Devices with combined types of protection may only be operated in one of the possible types of protection. For this purpose, observe the 'Product Identification' chapter in the operating or commissioning instruction before commissioning.

Model TTF200-E4	
Type Examination Test Certificate	PTB 99 ATEX 1144 X PTB 05 ATEX 2017 X
II 2G Ex db IIC T6/T4 Gb	
II 1G Ex ia IIC T6 Ga	

IECEx intrinsic safety

Approved for use in Zone 0, 1, and 2.

Model TTF200-H1	
IECEx certificate of conformity	IECEx PTB 09.0014X
Ex ia IIC T6...T1 Ga	
Ex [ia IIC Ga] ib IIC T6...T1 Gb	
Ex [ia IIIC Da] ib IIC T6...T1 Gb	

IECEx flameproof (enclosure)

Approved for use in Zone 1 and 2.

Model TTF200-H5	
IECEx certificate of conformity	IECEx PTB 12.0039 X
Ex db IIC T6/T4 Gb	

LCD indicator

ATEX intrinsic safety

The device fulfills the requirements of Directive 2014/34/EU in case of corresponding purchase orders and is approved for use in Zone 0, 1 and 2.

Type Examination Test Certificate	PTB 05 ATEX 2079 X
II 1G Ex ia IIC T6 Ga	

IECEx intrinsic safety

Approved for use in Zone 0, 1, and 2.

IECEx certificate of conformity	IECEx PTB 12.0028X
Ex ia IIC T6	

Temperature data

Transmitter

ATEX / IECEx intrinsic safety

Temperature class	**Permissible ambient temperature range**	
	Device category 1 use	**Device category 2 / 3 use**
T6	−40 to 44 °C (−40 to 111.2 °F)	−40 to 56 °C (−40 to 132.8 °F)
T4-T1	−40 to 60 °C (−40 to 140.0 °F)	−40 to 85 °C (−40 to 185.0 °F)

ATEX / IECEx Flameproof (Enclosure)

Temperature class	Permissible ambient temperature range on the connection head
T6	−40 to 67 °C (−40 to 152 °F)
T4 to T1	−40 to 85 °C (−40 to 185 °F)

LCD indicator
ATEX / IECEx intrinsic safety

Temperature class	Permissible ambient temperature range	
	Device category 1 use	Device category 2 / 3 use
T6	−40 to 44 °C (−40 to 111.2 °F)	−40 to 56 °C (−40 to 132.8 °F)
T4-T1	−40 to 60 °C (−40 to 140 °F)	−40 to 85 °C (−40 to 185 °F)

Electrical data

Transmitter
Intrinsic safety type of protection Ex ia IIC (Part 1)

Supply circuit	
Max. voltage	U_i = 30 V
Short-circuit current	I_i = 130 mA
Max. power	P_i = 0.8 W
Internal inductance	L_i = 160 µH
Internal capacitance	C_i = 0.57 nF

Intrinsic safety type of protection Ex ia IIC (Part 2)

Measurement current circuit		
	Resistance thermometers, resistors	Thermocouples, voltages
Max. voltage	U_o = 6.5 V	U_o = 1.2 V
Short-circuit current	I_o = 17.8 mA	I_o = 50 mA
Max. power	P_o = 29 mW	P_o = 60 mW
Internal inductance	L_i = 0 mH	L_i = 0 mH
Internal capacitance	C_i = 118 nF	C_i = 118 nF
Maximum permissible external inductance	L_o = 5 mH	L_o = 5 mH
Maximum permissible external capacitance	C_o = 1.55 µF	C_o = 1.05 µF

Intrinsic safety type of protection Ex ia IIC (Part 3)

LCD indicator interface	
Max. voltage	U_o = 6.2 V
Short-circuit current	I_o = 65.2 mA
Max. power	P_o = 101 mW
Internal inductance	L_i = 0 mH
Internal capacitance	C_i = 0 nF
Maximum permissible external inductance	L_o = 5 mH
Maximum permissible external capacitance	C_o = 1.4 µF

Type of protection flameproof (enclosure) Ex db IIC

Supply circuit	
Maximum voltage	U_S = 30 V
Maximum current	I_s = 32 mA, limited by the upstream fuse (rated fuse current 32 mA)

Measurement current circuit	
Maximum voltage	U_O = 6.5 V
Maximum current	I_O = 17.8 mA
Maximum power	P_O = 29 mW

LCD indicator
Intrinsic safety type of protection Ex ia IIC

Supply circuit	
Max. voltage	U_i = 9 V
Short-circuit current	I_i = 65.2 mA
Max. power	P_i = 101 mW
Internal inductance	L_i = 0 mH
Internal capacitance	C_i = 0 nF

Ordering Information

TTF200

Base model	**TTF200**	**XX**	**X**	**X**	**X**	**XX**
TTF200 Field Mounted Temperature Transmitter, Pt100 (RTD), thermocouples, electrical isolation						
Explosion Protection						
Without explosion protection		Y0				
ATEX Intrinsic Safety type of protection: Zone 0: II 1 G Ex ia IIC T6 Ga, Zone 1 (0): II 2 (1) G Ex [ia IIC Ga] ib IIC T6 Gb, Zone 1 (20): II 2 G (1D) Ex [ia IIIC Da] ib IIC T6 Gb		E1				
ATEX Flameproof type of protection: Zone 1: II 2 G Ex db IIC T6/T4 Gb		E3				
ATEX Flameproof and Intrinsic Safety type of protection: Zone 1 / Zone 0: II 2 G Ex db IIC T6/T4 Gb und II 1 G Ex ia IIC T6 Ga		E4				
IECEx Intrinsic Safety type of protection: Zone 0: Zone 0: Ex ia IIC T6 Ga, Zone 1 (0): Ex [ia IIC Ga] ib IIC T6 Gb, Zone 1 (20): Ex [ia IIIC Da] ib IIC T6 Gb		H1				
IECEx Flameproof type of protection: Zone 1: Ex db IIC T6/T4 Gb		H5				
Housing / Display						
Single-compartment housing (aluminium) / Without display			A			
Single-compartment housing (stainless steel) / Without display			B			
Single-compartment housing (aluminium) / With LCD-display			E			
Single-compartment housing (stainless steel) / With LCD-display			F			
Cable Entry						
Thread 2 × M20 × 1.5				1		
Thread 2 × ½ in NPT				2		
Thread 2 × ¾ in NPT				3*		
Cable gland 2 × M20 × 1,5 (plastic version with limited temperature range)				4		
Communication Protocol						
HART, programmable, output signal 4 to 20 mA					H	
Configuration						
Standard configuration						BS
Customer-specific configuration, except user curve						BF**

* Only available with **Housing / Display** code A, E

** E.g. set measuring range, TAG no.

Additional ordering information TTF200

	XX	XX	XXX	XX	XX	XX	XX	XX	XX
Declarations and Certificates									
SIL2 - Declaration of Conformity	CS								
Declaration of compliance according EN 10204-2.1, with the order	C4								
Inspection certificate according EN 10204-3.1, visual, dimensional and functional test	C6								
Calibration Certificates									
With 5-point factory certificate		EM							
Inspection certificate according EN 10204-3.1, 5-point calibration		EP							
Handling of Certificates									
Send via e-mail			GHE						
Send via mail			GHP						
Send via mail express			GHD						
Send with instrument			GHA						
Only archived			GHS						
Mounting Bracket									
Wall mounting / 2 in pipe mounting bracket (stainless steel)				K2					
Cable Entry Options									
Cable gland 2 × ½ in NPT					U5***				
Device Identification Plate									
Stainless steel						T0			
Additional Tag Plate									
Stainless steel							I1		
Customer-specific Versions									
(Please specify)								Z9	
Documentation Language									
German									M1
English									M5
Language package Western Europe / Scandinavia (Languages: DA, ES, FR, IT, NL, PT, FI, SV)									MW
Language package Eastern Europe (Languages: EL, CS, ET, LV, LT, HU, HR, PL, SK, SL, RO, BG)									ME

*** Only available with **Cable Entry** code 2

Accessories	Ordering number
TTF200 commissioning instruction CI/TTF200-DE, German	3KXT221201R4403
TTF200 commissioning instruction CI/TTF200-EN, English	3KXT221201R4401
TTF200 commissioning instruction CI/TTF200-X1, Western Europe / Scandinavia language package	3KXT221201R4493
TTF200 commissioning instruction CI/TTF200-X2, Eastern Europe language package	3KXT221201R4494

Order form configuration

HART device design: Instructions for customer-specific configuration

Configuration		Selection
IEC 60751	Resistance thermometer	☐ Pt10 ☐ Pt50 ☐ Pt100 (Standard) ☐ Pt200 ☐ Pt500 ☐ Pt1000
JIS C1604		☐ Pt10 ☐ Pt50 ☐ Pt100
MIL-T-24388		☐ Pt10 ☐ Pt50 ☐ Pt100 ☐ Pt200 ☐ Pt1000
DIN 43760		☐ Ni50 ☐ Ni100 ☐ Ni120 ☐ Ni1000
OIML R 84		☐ Cu10 ☐ Cu100
	Resistance measurement	☐ 0 to 500 Ω ☐ 0 to 5000 Ω
IEC 60584	Thermocouple	☐ Type K ☐ Type J ☐ Type N ☐ Type R ☐ Type S ☐ Type T ☐ Type E ☐ Type B
DIN 43710		☐ Type L ☐ Type U
ASTM E-988		☐ Type C ☐ Type D
	Voltage measurement	☐ –125 to 125 mV ☐ –125 to 1100 mV
Sensor circuit (for resistance thermometer and resistance measurement only)		☐Two-wire ☐ Three-wire (standard) ☐ Four-wire Two-wire circuit: Compensation of sensor-wire resistance max. 100 Ω ☐ Sensor 1: ____ Ω
Reference junction (for thermocouples only)		☐ Internal (for standard thermocouple, except type B) ☐ None (type B) ☐ External / temperature: ____°C
Measuring range		☐ Lower range value : _____ (standard: 0) ☐ Upper range value : _____ (standard: 100)
Unit		☐Celsius (default) ☐ Fahrenheit ☐ Rankine ☐ Kelvin
Characteristic behavior		☐ rising 4 to 20 mA (standard) ☐ falling 20 to 4 mA
Output behavior for error		☐ Overrange / 22 mA (standard) ☐ Underrange / 3.6 mA
Output damping (T_{63})		☐ Off (standard) ☐ ____ seconds (1 to 100 s)
TAG number		☐ _____ (maximum 8 characters)
Software write protection		☐ Off (standard) ☐ On

Trademarks

HART is a registered trademark of FieldComm Group, Austin, Texas, USA

Sales **Service**

Castel Maggiore (BO) 40013
Via Lirone 60/i

e-mail: info@eurotecsrl.com
Tel: +39 051/6321595
Website: www.eurotecsrl.com

C.F.: 04103780377
P.I.: 01596581205

ABB Limited
Measurement & Analytics
Howard Road, St. Neots
Cambridgeshire, PE19 8EU
UK
Tel: +44 (0)870 600 6122
Fax: +44 (0)1480 213 339
Email: enquiries.mp.uk@gb.abb.com

ABB Inc.
Measurement & Analytics
125 E. County Line Road
Warminster, PA 18974
USA
Tel: +1 215 674 6000
Fax: +1 215 674 7183

ABB Automation Products GmbH
Measurement & Analytics
Schillerstr. 72
32425 Minden
Germany
Tel: +49 571 830-0
Fax: +49 571 830-1806

abb.com/temperature

We reserve the right to make technical changes or modify the contents of this document without prior notice. With regard to purchase orders, the agreed particulars shall prevail.
ABB does not accept any responsibility whatsoever for potential errors or possible lack of information in this document.

We reserve all rights in this document and in the subject matter and illustrations contained therein. Any reproduction, disclosure to third parties or utilization of its contents – in whole or in parts – is forbidden without prior written consent of ABB.

© ABB 2018

3KXT221201R1001

DS/TTF200-EN Rev. B 12.2018