ABB MEASUREMENT & ANALYTICS | DATA SHEET

TB84PH

pH /ORP / pIon transmitter

Measurement made easy

Hazardous area rated transmitter with intuitive user interface

Simple menu programming

Online continuous sensor diagnostics

Two fully programmable isolated outputs

Three fully programmable relay outputs

Pt 100 and 3 kΩ Balco temperature sensor compatibility

Back-lit display for easy viewing

Adjustable damping

Hold output function
- holds all outputs or any individual output

Programmable security codes and configuration lockout

Universal power supply
- 120 / 240 V AC, 50 / 60 Hz

NEMA 4X/IP65 housing
- cast aluminum with corrosion-resistant polyester powder coat finish

CE Mark
- complies with all applicable European Community product requirements, specifically those required to display the CE marking on the product nameplate

Three standard modes of automatic temperature compensation
- manual Nernstian, standard automatic Nernstian and automatic Nernstian with solution compensation coefficient

Advantage pH / ORP / pIon transmitter

The ABB TB84PH Advantage™ pH / ORP / pIon transmitter is an advanced microprocessor-based instrument. Smart keys on the front panel provide for local programming of all transmitter functions. Easy-to-follow instructions appear above each smart key. A unique secondary display clearly defines each menu option during programming. During normal operation, the secondary display can show temperature, mA output and several other useful parameters. This innovative, user-friendly interface provides for straightforward operation.

Standard outputs include two isolated analog (current) outputs and three relay outputs. The analog outputs can be configured for the process variable (PV) and / or temperature. The relay outputs can be configured for the PV, temperature, diagnostics, cycle timer controller, or sensor cleaner.

The TB84PH transmitter is compatible with all ABB pH / ORP / pIon sensors, including those with the advanced Next Step™ reference technology. The Next Step Advantage™ sensors with solution ground enable the transmitter to perform online sensor diagnostics. Asymmetry and isopotential points are analyzer adjustable, insuring flexibility and compatibility with all types of sensors.

The TB84PH transmitter meets current CE and NEMA 4X/IP65 requirements.

Calibration

Smart key programming makes transmitter calibration accurate and efficient. One or two-point calibration routines calculate and display the slope and offset of the sensor automatically. Slope and offset information is useful as a diagnostic tool or to alert the user of the need to replace the sensor. The transmitter is shipped calibrated to 100 % efficiency and with no offset. Choosing RESET CAL returns the calibration to those theoretically perfect values. This eliminates the need for external mV calibrations. Analysis of calibration information by the transmitter helps ensure correct calibration.

Programmable security code

The transmitter has a single three-digit security code. Menu-selectable choices enable the security code to be applied to none or any combination of the following choices:

- calibrate
- output / hold
- configure
- set point / tune

Basic or advanced programming

The transmitter has two programming modes: basic and advanced. Advanced mode has an expanded set of functions intended for complex applications.

Separating the basic and advanced modes simplifies setup and calibration activities. Basic and advanced programming modes are nomenclature options selected at the time of purchase. Advanced configuration choices are:

- Adjustable asymmetry and isopotential points for compatibility with sensors with non glass electrodes
- Nonlinear output function generator
- User-entered, solution specific, temperature compensation coefficient
- Analog pulse diagnostic output
- Adjustable reference impedance alarming
- pIon (specific ion) concentration
- Refer to Analog Outputs and Relay Outputs for the advanced programming features for the analog and digital outputs

Analog outputs

The transmitter has two isolated analog outputs (AO1 and AO2). Each is user-configurable as either a 0 to 20 or a 4 to 20 mA signal. AO1 is dedicated to the PV while AO2 is configurable for either the PV or temperature. A 2-point calibration method applies to both analog outputs. This enables adjustment of the analog outputs to compensate for other devices in the loop that may not be calibrated. Entering the PV or temperature endpoints in reverse order allows for reverse-acting outputs.

A capacitive type lag, applied via the damping function, is useful in process environments where noise is present. Damping is supported for both analog outputs and the displayed PV and has a maximum value of 99.9 seconds. One damping value affects both analog outputs and the displayed PV in basic configuration. Individual damping values affect each analog output and the displayed PV in advanced configuration.

Relay outputs

The transmitter has three relay outputs available (RO1, RO2, RO3). Each is jumper selectable as either NO (normally open) or NC (normally closed). A corresponding relay icon appears on the display when a relay activates. The functionality of each relay output depends on the configuration mode. Table 1 shows the possible functionality of each relay output for basic and advanced configuration.

The high and low PV alarms are a function of the PV, deadband and delay values. The diagnostic relays can be linked to sensor diagnostics, analyzer diagnostics, or all diagnostic conditions. The high- and low-cycle timer has adjustable set points, cycle time and on time. This feature works best with processes that have poor mixing or a long lag or dead time. The cycle timer enables a waiting period to see the results of chemical addition by interrupting the feed. The sensor cleaner feature provides for cycle time, on time and recovery time programming.

This makes set-up and operation of the transmitter with the ABB hydraulic sensor cleaner or Safe-T-Clean valve easy and trouble free.

	R01		R02		R03	
Function	**Basic**	**Adv**	**Basic**	**Adv**	**Basic**	**Adv**
High or low PV alarm	✔	✔	✔	✔	✔	✔
High or low temperature alarm (°C or °F)		✔	✔	✔	✔	✔
Diagnostics alarm		✔		✔	✔	✔
High- or low-cycle timer		✔		✔		✔
Sensor cleaner*		✔		✔		✔

* If a relay output is configured as a sensor cleaner, no other relay output can be used for this function

Table 1 Relay output functionality

Diagnostics

The TB84PH transmitter monitors both the sensor and the transmitter constantly. This helps to ensure reliability and accuracy. Upon detection of a diagnostic condition, the transmitter provides diagnostic notification by flashing a FAULT icon on the display and supplying a pulse on AO1 (if activated). Pressing the FAULT info smart key stops the icon from flashing and provides, on the secondary display, a short description and fault code. The FAULT icon remains on until the problem is resolved. Sensor faults that activate the diagnostic notification are:

- Broken glass electrode
- High reference impedance
- Shorted or open cable
- Sensor out of solution
- Shorted or open temperature compensator
- Ground loop detection (patent pending)

Diagnostics can be turned on or off. Sensor diagnostics require an Advantage sensor for everything but a shorted or open temperature sensor. Other sensor diagnostics, that work with all sensors, result during and after sensor calibration. Reported conditions such as bad calibration, large sensor offset, high or low sensor efficiency, slope and offset calculation and display and other predictive information aid in the determination of sensor related conditions.

Hold output

The transmitter has a hold output state that improves plant safety and process integrity during maintenance and calibration. When activated, HOLD appears at the top of the display. Upon release of the hold state, HOLD disappears. Individual analog and relay outputs can be held or all of them can be held by choosing HOLD ALL. During a two-point calibration the output is held automatically and HOLD appears. Additionally, the analog outputs can be held to any preselected level. The relay outputs can be held in their active or inactive states. This is useful for checking and exercising any external devices connected to the analyzer. Advanced programming allows the choice of holding the analog and digital outputs in groups during the sensor cleaning cycle.

Diagnostic pulse

The analog output is fully scalable over any pH, ORP, or pIon range. Advanced configurations allow pulsing of AO1 during a diagnostic condition.

When the diagnostic pulse is active, the output is modulated for 1 second out of a 6-second repeating cycle to a configuration selectable level ranging from 0.1 to 100 % of span (0.16 to 16 mA for a 4 to 20 mA output or 0.20 to 20 mA for a 0 to 20 mA output). The modulation will add current for all outputs below 50 % (12 mA for a 4 to 20 mA output or 10 mA for a 0 to 20 mA output). The modulation subtracts current for all outputs above 50 %. This provides remote notification of a problem

Temperature compensation

The TB84PH transmitter is compatible with either a Pt100 or 3 kΩ Balco RTD (resistive temperature device). The automatic temperature compensation options are:

- manual Nernstian
- standard automatic Nernstian
- automatic Nernstian with solution compensation coefficient (±X.XX pH/10 °C)

pH / ORP / pIon sensor compatibility

The TB84PH transmitter operates with the original ABB solid state pH / ORP sensors as well as the Next Step reference and Next Step Advantage pH / ORP sensors with solution ground. Adjustable asymmetry and isopotential points ensure compatibility with non glass pH sensor electrodes such as those that are antimony based.

Specification

Input voltage

120 / 240 V AC, 50 / 60 Hz

Range

93.5 to 276 V AC

Installation category

II

Power consumption

17 VA max.

Input range

pH

0 to 14 pH (with -2 to 16 pH over range)

ORP and pIon

±1,999 mV

Display resolution

pH

0.01 pH

ORP and pIon

1 mV

Temperature

1 °C, 1 °F

Temperature compensation mode

pH

- Manual Nernstian
- Standard automatic Nernstian
- Automatic Nernstian with solution compensation coefficient (±XX.XX mV / 10 °C)

Temperature compensation types

- Pt100
- 3 kΩ Balco

AO1

pH

Isolated 0 to 20 mA or 4 to 20 mA, direct or reverse-acting, linear and nonlinear, configurable across full pH range.

ORP and pIon

Isolated 0 to 20 mA or 4 to 20 mA, direct or reverse-acting, linear and nonlinear, configurable across full range.

Minimum span

- pH 1 pH unit
- ORP and pIon 100 mV

Maximum span

- pH 14 pH
- ORP and pIon 3,998 mV

AO2

pH

Isolated 0 to 20 mA or 4 to 20 mA, direct or reverse-acting, linear, configurable across full pH range.

ORP and pIon

Isolated 0 to 20 mA or 4 to 20 mA, direct or reverse-acting, linear, configurable across full range.

Temperature

Isolated 0 to 20 mA or 4 to 20 mA, direct or reverse-acting, linear, configurable in either °C or °F, configurable across full range

Minimum span

- pH 1 pH unit
- ORP and pIon 100 mV
- Temperature 10 °C, 18°F

Maximum span

- pH 14 pH
- ORP and pIon 3,998 mV
- Temperature 140 °C, 284°F

Relay outputs

Form C, SPDT relays that are jumper selectable as either normally open or normally closed. Refer to Table 1 on page 4 to see the functionality of each relay output in basic and advanced configuration.

Contact ratings (max.)

AC 100 VA, 240 V AC, 3 A
DC 50 W, 24 V DC, 2 A

High and low set points (basic and advanced configuration)

Source: pH

- High pH range -2 to 16 pH
- Low pH range -2 to 16 pH
- Deadband range 0 to 10 pH
- Delay value range 00.0 to 99.9 min.

Source: ORP and pIon

- High mV range ±1,999 mV
- Low mV range ±1,999 mV
- Deadband range 0 to 200 mV
- Delay value range 00.0 to 99.9 min.

Source: temperature

- High range 0 to 140 °C or 32 to 284 °F
- Low range 0 to 140 °C or 32 to 284 °F
- Deadband range 0 to 10 °C or 0 to 18 °F
- Delay value range 00.0 to 99.9 min.

High- or low-cycle timer (advanced configuration only)

Source: pH

- Turn on range –2 to 16 pH
- Cycle time range 00.0 to 99.9 min
- On time range 00.0 to 99.9 min

Source: ORP and pIon

- Turn on range ±1,999 mV
- Cycle time range 00.0 to 99.9 min
- On time range 00.0 to 99.9 min

Sensor cleaner (advanced configuration only)

- Cycle time range 00.0 to 99.9 h
- On time range 00.0 to 99.9 min
- Recovery time range 00.0 to 99.9 min

Nonlinearity and repeatability:

pH

- Display ±0.01 pH
- Output ±0.02 mA at full scale output settings

ORP and pIon

- Display ±0.01 mV
- Output ±0.02 mA at full scale output settings

Maximum sensor cable length

30.5 m (100 ft) without preamplifier

Turn on time

2 s typical, 4 s max.

Load resistance range (analog outputs)

750 Ω max.

Input impedance

$>10^{12}$ Ω

Mounting effect

None

Damping

Continuously adjustable from 00.0 to 99.9 s

Environmental (temperature)

Operating

–20 to 60 °C (–4 to 140 °F)

Storage

–40 to 70 °C (–40 to 158 °F)

Humidity (operating and storage)

Will meet specifications to 95 % RH

Housing

NEMA 4X and IP65, anodized aluminum alloy with polyester powder coating

Conduit connection

5 total, 2 each 22.2 mm (0.875 in) holes in enclosure that accept ½ in hubs, 3 each 15.24 mm (0.6 in) holes that accept PG9 hubs

Size (½ DIN), H x W x D

144.0 x 144.0 x 171.0 mm (5.67 x 5.67 x 6.73 in)

Min. panel depth

144.8 mm (5.70 in)

Max. panel thickness

9.5 mm (0.38 in)

Panel cutout

135.4 (+1.3, –0.8) by 135.4 (+1.3, –0.8) mm
(5.33 [+0.05, –0.03] by 5.33 [+0.05, –0.03] in)

Weight

2.2 kg (4.8 lb)
3.5 kg (7.7 lb) with pipe mounting hardware

Agency certifications

CSA

- Class I, Division 2, Groups A, B, C, and D
- Class II, Division 2; Groups E, F and G
- Class III, Division 2

FM

Non-incendive:

- Class I, Division 2, Groups A, B, C, and D
- Class II, Division 2; Groups F and G
- Class III, Division 2

EMC requirements

CE Certified – complies with all applicable European Community product requirements, specifically those required to display the CE markings on the product nameplate.

Installation

Dimensions in mm (in)

Panel-mounting

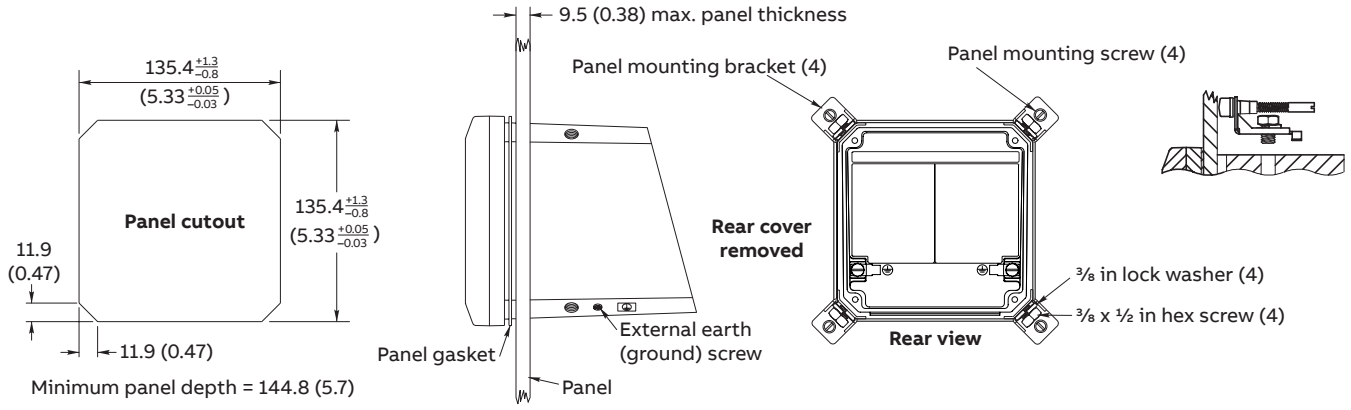

Hinge / Wall (rear) mounting

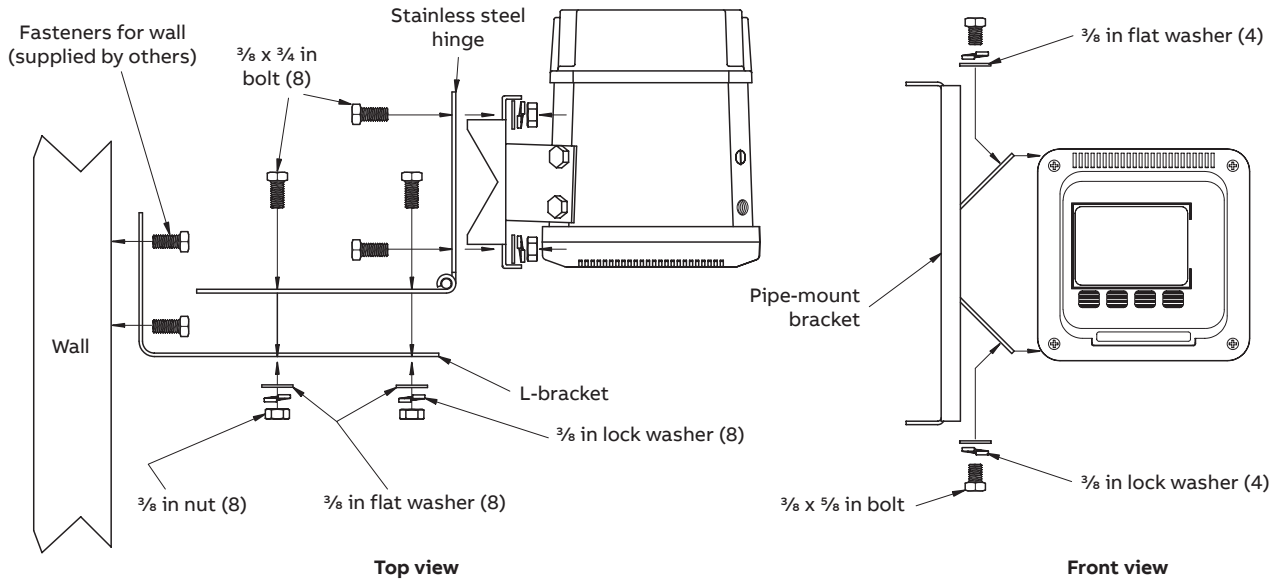

Wall (side) mounting

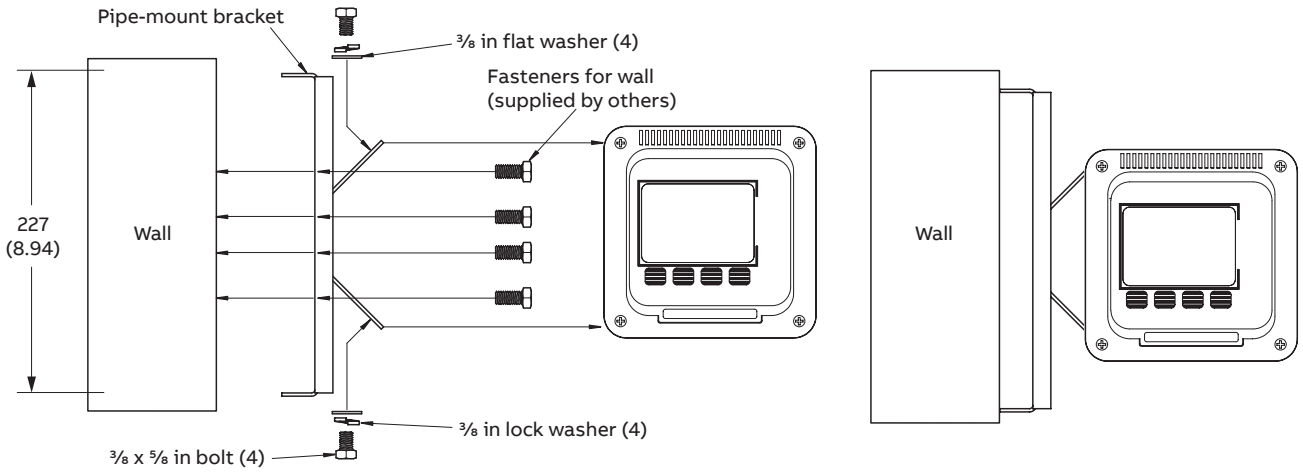

Pipe-mounting

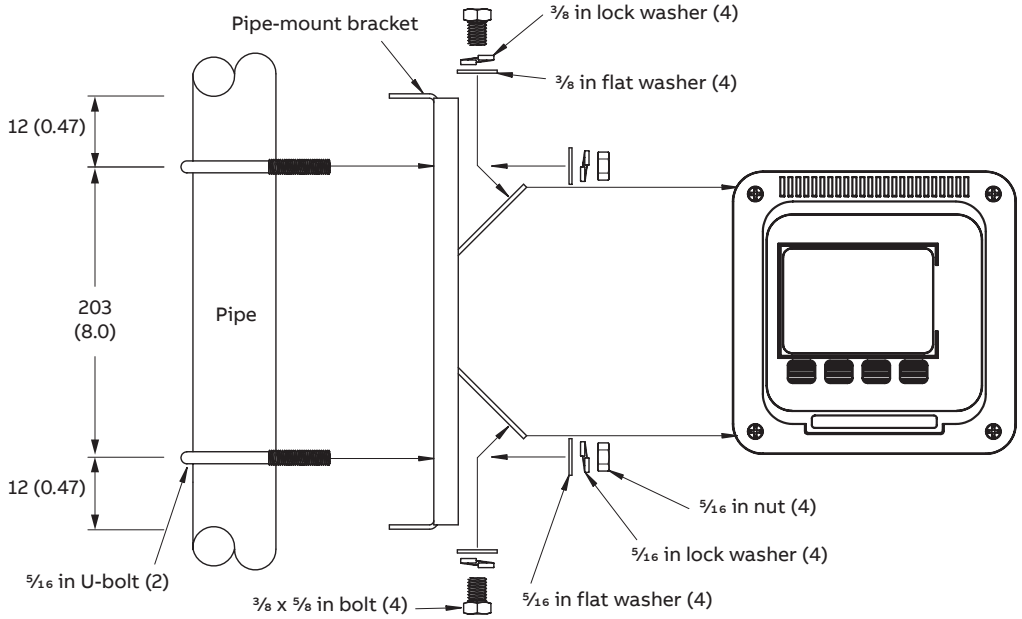

Electrical connections

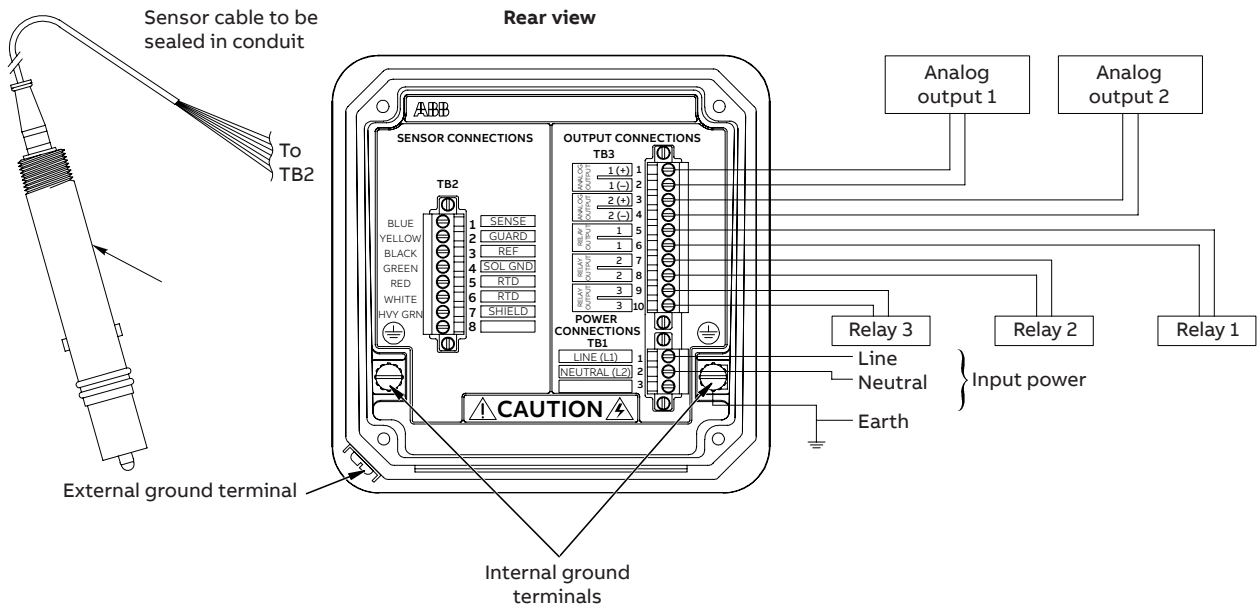

Ordering information

Advantage pH / ORP / pIon transmitter[1]	**TB84**	**XX**	**X**	**0**	**0**	**0**	**X**	**X**	**X**
Input									
pH / ORP (REDOX) / pIon (includes BNC to pin lug adapter[2])		PH							
Programming option									
Basic			1						
Advanced[3]			2						
Reserved									
For future use				0					
Reserved									
For future use					0				
Housing type									
Anodized aluminum, powder coat polyester						0			
Mounting hardware									
None							0		
Pipe							1		
Hinge (for pipe or wall)							2		
Panel							3		
Wall							4		
Agency approval									
None								0	
FM (Factory Mutual)								1	
CSA (Canadian Standards Association)								2	
Tag									
None									0
Stainless steel (4TB5003-0007)									1
Mylar™									2

Notes.

1. One instruction manual included. Additional copy, part number OI/TB84PH-EN
2. Although the features of the TB84PH Advantage transmitter are best utilized by using a TBX5 Advantage sensor, the TB84PH is compatible with all ABB pH / ORP / pIon sensors.

   To connect existing sensors with BNC connectors on them use:
   part no. 4TB9515-0166 BNC/TC to pin TB84 adapter with cable grip or part no. 4TB9515-0164 (BNC / TC to pin adapter)

   Cable grip available separately, part no. 4TB9515-0165 (note that cable grip will not grip sensor cables with TC). One adapter and cable grip are included with each TB84PH
3. See product data sheets (DS/TB84EC-EN, DS/TB84TE-EN and DS/TB84TC-EN) for details of advanced programming options

Installation accessories

Panel-mounting kit	4TB9515-0123
Pipe-mounting kit	4TB9515-0124
Hinge-mounting kit	4TB9515-0125
Wall-mounting kit	4TB9515-0156
Cable grip for ½ in hubs	4TB9515-0165
BNC / TC to pin adapter with cable grip for ½ in hubs	4TB9515-0166
Cable grip for PG9 hubs	4TB9515-0191
Complete cable grip kit (2 each ½ in and 3 each PG3)	4TB9515-0198

Acknowledgements

- Mylar is a registered trademark of Dupont Teijin Films

Sales

Service

Castel Maggiore (BO) 40013
Via Lirone 60/i

e-mail: info@eurotecsrl.com
Tel: +39 051/6321595
Website: www.eurotecsrl.com

C.F.: 04103780377
P.I.: 01596581205

—

ABB Limited
Measurement & Analytics
Oldends Lane, Stonehouse
Gloucestershire, GL10 3TA
UK
Tel: +44 (0)1453 826 661
Fax: +44 (0)1453 829 671
Email: instrumentation@gb.abb.com

ABB Inc.
Measurement & Analytics
125 E. County Line Road
Warminster, PA 18974
USA
Tel: +1 215 674 6000
Fax: +1 215 674 7183

abb.com/measurement

—

We reserve the right to make technical changes or modify the contents of this document without prior notice. With regard to purchase orders, the agreed particulars shall prevail. ABB does not accept any responsibility whatsoever for potential errors or possible lack of information in this document.

We reserve all rights in this document and in the subject matter and illustrations contained therein. Any reproduction, disclosure to third parties or utilization of its contents – in whole or in parts – is forbidden without prior written consent of ABB.

© Copyright 2018 ABB.
All rights reserved.

3KXA162805R1001

DS/TB84PH-EN Rev. D 05.2018