ABB MEASUREMENT & ANALYTICS | DATA SHEET

TB82PH

2-wire pH / ORP / pIon transmitters

Measurement made easy

Loop-powered transmitter that reduces installation costs in hazardous areas

Intuitive user interface
- easy-to-use menus guide the operator through set-up, calibration and maintenance

Advanced digital communications
- available with PROFIBUS® PA, FOUNDATION™ Fieldbus or HART communications

Hazardous area transmitters
- withstand the harshest environments
- NEMA 4X / IP65 housings

Large, easy-to-read display
- shows primary measurement together with user-selectable secondary display (temperature, output current or sensor input)

Programmable security codes
- prevents unauthorized modifications to transmitter configuration and calibration

Intrinsically safe, non-incendive design
- enables use in hazardous areas

General description

The rugged ABB TB82 two-wire pH, ORP (REDOX), pIon transmitter is designed for a broad range of industries from chemical, power and pulp & paper to water & wastewater treatment.

The TB82 is available with traditional programmable outputs or with advanced digital communications using Foundation Fieldbus (FF), PROFIBUS PA (PA) or HART.

Setup, maintenance and operation in the field is simple. Easy-to-follow instructions appear above each smart key. The user-friendly interface enables straightforward transmitter configuration and calibration.

A unique secondary display clearly defines each menu option when programming the transmitter. During normal operation, the secondary display may be configured to show process temperature, current output, mV or software revision depending upon configuration.

The TB82 transmitters meet current CE, NEMA 4X, IP65, CSA, FM, ATEX and FISCO requirements.

Sensor compatibility and ranges

The TB82PH transmitter accepts ABB's pH, oxidation / reduction potential (ORP) and ion-selective (pIon) sensors in addition to most competitors' sensors .

Calibration

In addition to the traditional two-point calibration, the TB82 features a simple one-point process calibration to adjust for offsets that may occur when the sensor is in process. When initiating a two-point calibration, the user has the option to hold the analog output at a defined level. If necessary, the TB82 may be easily reset back to a factory calibration.

Programmable security code

The transmitter has a 3-digit security code to prevent unauthorized modifications to any combination of the following menus: Calibration, Output / Hold, Security and Configure.

Basic or advanced programming modes

Note. FOUNDATION Fieldbus, PROFIBUS PA models and HART are available only in advanced mode.

Available with either basic or advanced programming modes at time of purchase, the advanced mode offers an expanded feature set for more complex operations, for example:

- **Automatic Nernstian with solution coefficient**
  - Temperature compensation compensates the sensor output to a standard temperature value of 25 °C (77 °F) using the Nernst equation and a solution coefficient
- **Ion concentration**
  - Converts a pIon sensor output to concentration units (for example, parts per million or parts per billion)
- **Analog pulse diagnostic output**
  - Impresses a user-defined 0.16 to 16 mA pulse on the 4 to 20 mA output to alert the operator of a fault condition (not available on transmitters with digital communication).

Diagnostics

The transmitter constantly monitors both itself and the sensor to ensure reliability and accuracy. On detection of a diagnostic condition, the transmitter provides diagnostic notification by flashing FAULT on the display and supplying a pulse on the analog output (if activated on non-HART devices).

Transmitters equipped with Foundation Fieldbus or PROFIBUS PA send a complete diagnostic description over the network to the controller. This enables easy, immediate troubleshooting. Pressing FAULT info on the transmitter provides a short description and fault codes on the secondary display. The FAULT icon remains active until the problem has been resolved.

Sensor faults that activate the diagnostic notification are:

- Broken glass electrode [1]
- High reference impedance [1]
- Shorted or damaged cable
- Open cable
- Sensor not in contact with the solution [1]
- Shorted or open temperature compensator
- Ground loop [1]

[1] Requires the use of pH sensors with solution ground rods (for example, the ABB TBX5 sensors).

Adjustable damping

Damping is helpful in process environments where noise is present. It is a capacitive type lag where reaction to any signal change is slowed according to the entered time constant. For example, the response to a step input change reaches approximately 63 % of its final value in five seconds for five seconds of damping.

Communications

FOUNDATION Fieldbus (FF) addresses modern instrument users' needs for flexibility and cost savings, while providing a whole host of additional features.

- Measurement variable quality and diagnostic conditions transmitted during each scheduled data transfer
- Easily configured remotely or locally
- Transmission of multiple process variables using two analog input blocks (AI)
- Transmitter characteristics such as device name, manufacturer and serial number via a standard resource block
- Configuration and calibration capability via custom enhanced transducer block
- Provides calibration methods on supported host tools and systems

PROFIBUS PA (PA) is a standardized, open, digital communications system for process automation.

- Configuration, calibration and trending available via a Device Type Manager (DTM) when used on compatible host tools and systems
- Measurement variable quality and diagnostic conditions transmitted during each scheduled data transfer
- Remote and local configuration capability
- Choice of standard analyzer profile or manufacturer specific profile – conforms to PROFIBUS PA Profile requirements v. 3.0
- GSD files available on all product variations
- Utilizes one physical, one transducer, and two analog input blocks

HART communications protocol provide remote programming via any HART-compatible primary or secondary communications device.

- Digital communications through a low-level modulation superimposed on the standard 4 to 20 mA current loop
- Accommodates universal, common practice and device-specific command sets for functionality within HART networks and for use with HART hand-held terminals
- Driver files for various host systems and tools are available. Visit www.abb.com/measurement.

Specification

Type

2-wire pH / ORP / pIon transmitter

Input sensor types

pH

Glass, antimony (Sb), custom iso-potential and asymmetric potential

ORP

Platinum (Pt), gold (Au)

pIon

Sodium (Na), chloride, sulfide, etc

Input range

pH

0 to 14 pH (with –2 to +16 pH over range)

ORP / pIon

±1999 mV

Input temperature compensation types

- Pt 100
- 3 kΩ Balco

Temperature display range

–20 to 300 °C (–4 to 572 °F)

Temperature compensation modes

pH/ORP/pIon

- Manual Nernstian
- Standard automatic Nernstian
- Automatic Nernstian with solution coefficient

Accuracy, repeatability, non-linearity

pH display

±0.01 pH

ORP display

±1 mV

pIon display

±1 mV

Temperature display

1 °C or 1 °F

Output

±0.02 mA (non-FF devices)

Lightning suppressor

Installed integral to the transmitter to suppress lightning induced transients. Tested to suppress 10 successive 8 by 20 µsec pulses with a peak value of 20 kA (reference IEEE C62.41)

Power requirements

Standard

14.0 to 53 V DC (14.0 to 42 V DC for certified applications)

HART

14 to 53 V DC (14 to 42 V DC for certified applications). For HART communication, a 250 Ω resistor is required; 19 V DC minimum voltage required. 14 V DC required for liftoff

Foundation Fieldbus & PROFIBUS PA bus powered

9 to 32 V DC (non-I.S. model)
9 to 24 V DC (I.S. model)
15 mA quiescent current consumption

Agency certifications

ATEX Directive 2014/34/EU and IECEx LCIE16.0012X

ATEX Category II 1G; Ex ia, Zone 1; Group IIC, T4 when used with appropriate barriers

Canadian Standards Association (CSA)

Intrinsic safety:

- Class I, II, III; Division 1; applicable Groups A, B, C, D, E, F and G; when used with appropriate barriers. T3C

Non-incendive:

- Class I, Division 2, Groups A, B, C, and D. Class II, Division 2, Groups E, F and G. Class III, Division 2

Factory Mutual (FM)

Non-incendive:

- Class I; Division 2; Groups A, B, C, D; T3C
- Class II; Division 2; Groups E, F, G; T3C
- Class III; Division 2; T5

Fieldbus Intrinsically Safe Concept (FISCO)

Fieldbus products (FF and PA) meets the requirements for the FISCO model

EMC requirements

Conforms to the Directive 2014/30/EU and EN 61326-1 for CE marking.

...Specification

Stability

pH
±0.01 pH
ORP / pIon
±1 mV
Output
±0.01 mA
Temperature
1 °C or 1 °F

Dynamic response

3 secs for 90 % step change at 0.00 sec damping

Output

pH
Isolated 4 to 20 mA, linear and nonlinear, configurable across full pH range
ORP / pIon
Isolated 4 to 20 mA, linear and nonlinear, configurable across full range

Output minimum span

pH
1.00 pH
ORP / pIon
100 mV

Output maximum span (Full scale settings)

pH
14 pH units
ORP/pIon
–1999 to 1999 mV

Damping

Adjustable, 0.0 to 99.9 seconds

Environmental (temperature)

Operating
–20 to 60 °C (–4 to 140 °F)
LCD
–20 to 60 °C (–4 to 140 °F)
Storage
–40 to 70 °C (–40 to 158 °F)
Humidity
up to 95 % RH

Enclosure

NEMA 4X and IP65, anodized aluminum alloy with polyester powder coating
Size (½ DIN), H x W x D
144.0 x 144.0 x 171.0 mm (5.67 x 5.67 x 6.73 in)
Min. panel depth
144.8 mm (5.70 in)
Max. panel thickness
9.5 mm (0.38 in)
Panel cutout
135.4 [+1.3, -0.8] by 135.4 [+1.3, -0.8] mm
(5.33 [+0.05, -0.03] by 5.33 [+0.05, -0.03] in)
Weight
- 1.9 kg (4.2 lb)
- 3.4 kg (7.5 lb) with pipe mounting hardware

Conduit connections

Two each: 22.2 mm (0.875 in) holes in enclosure that accept ½ in hubs

Dimensions

Dimensions in mm (in)

Transmitter

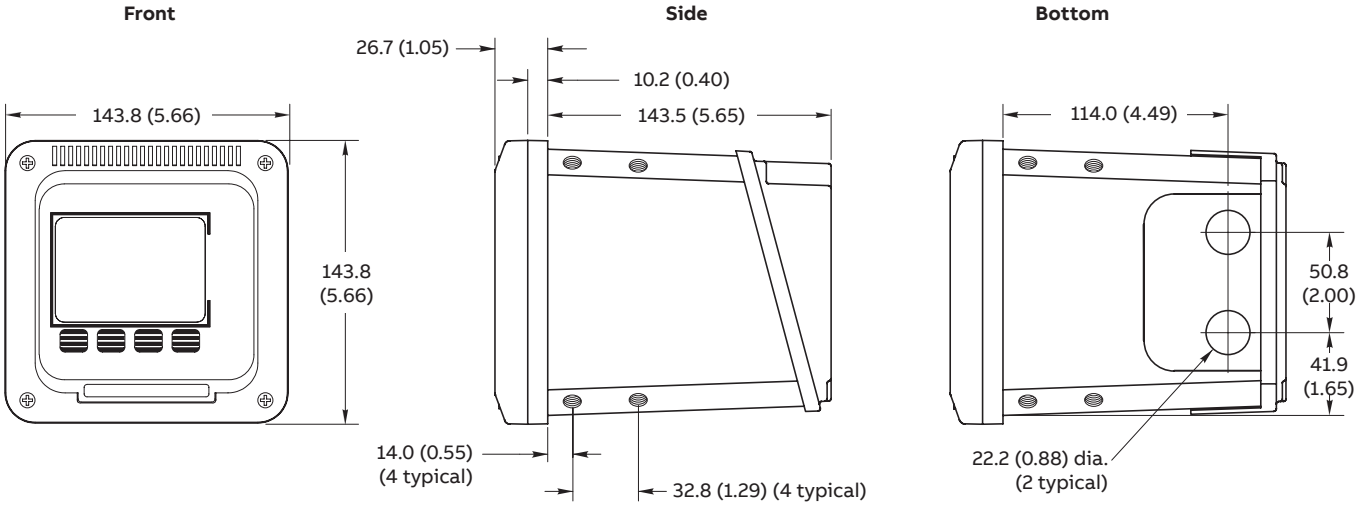

Pipe-mount option

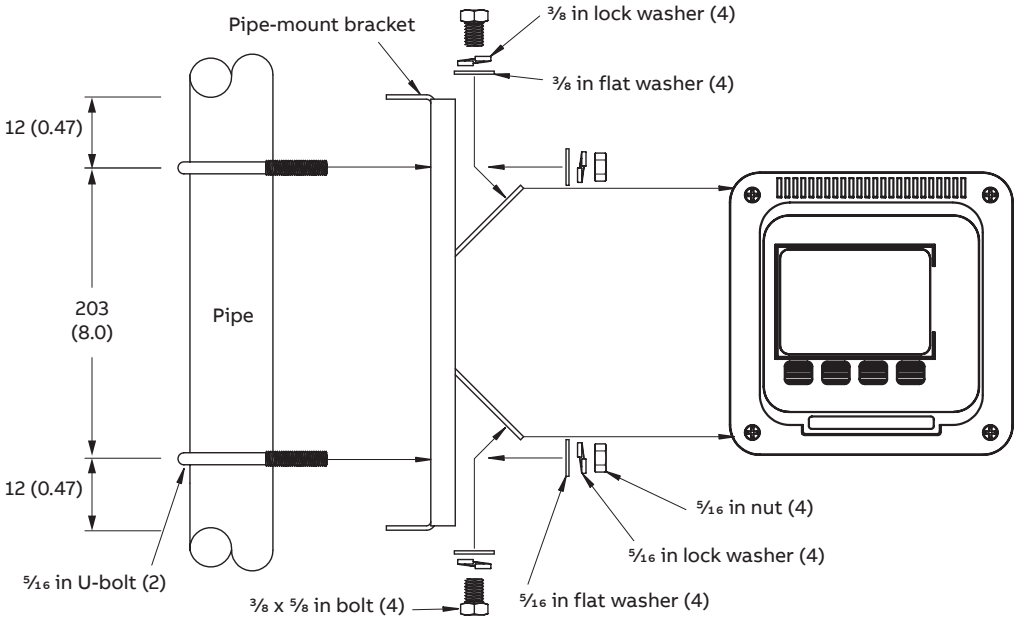

Panel-mount option

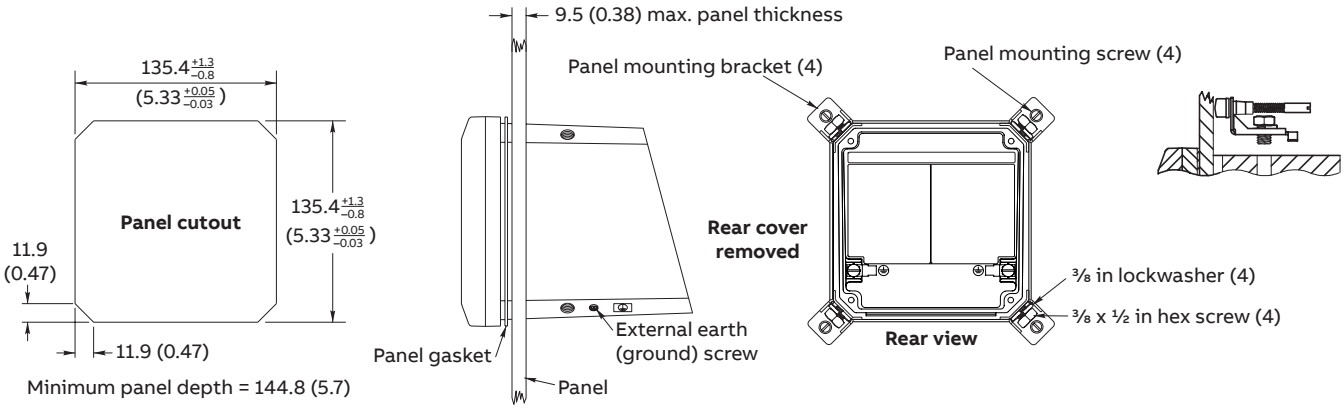

...Dimensions

Dimensions in mm (in)

Wall (side) mounting option

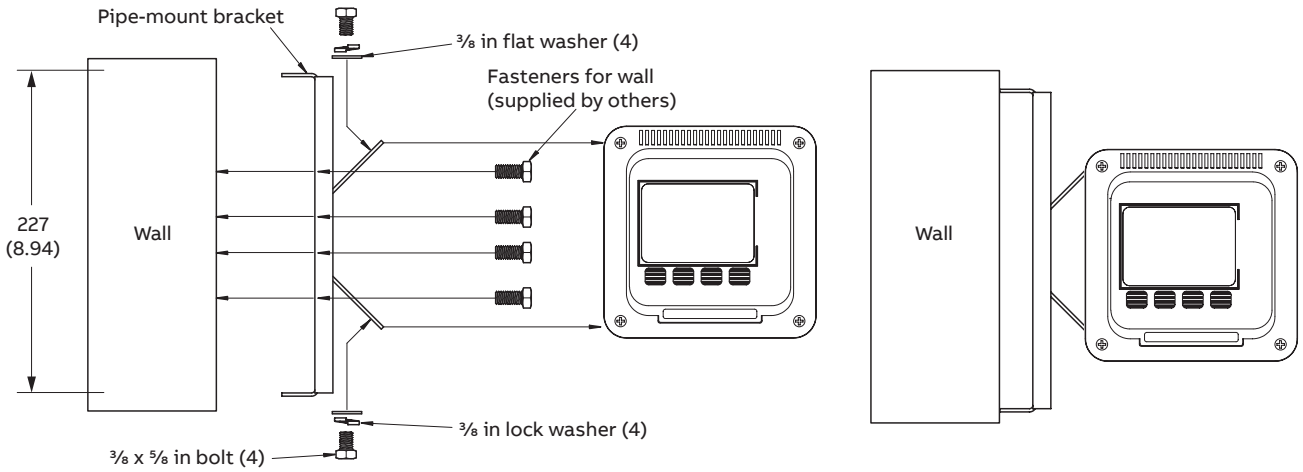

Wall / Hinge (rear) mounting option

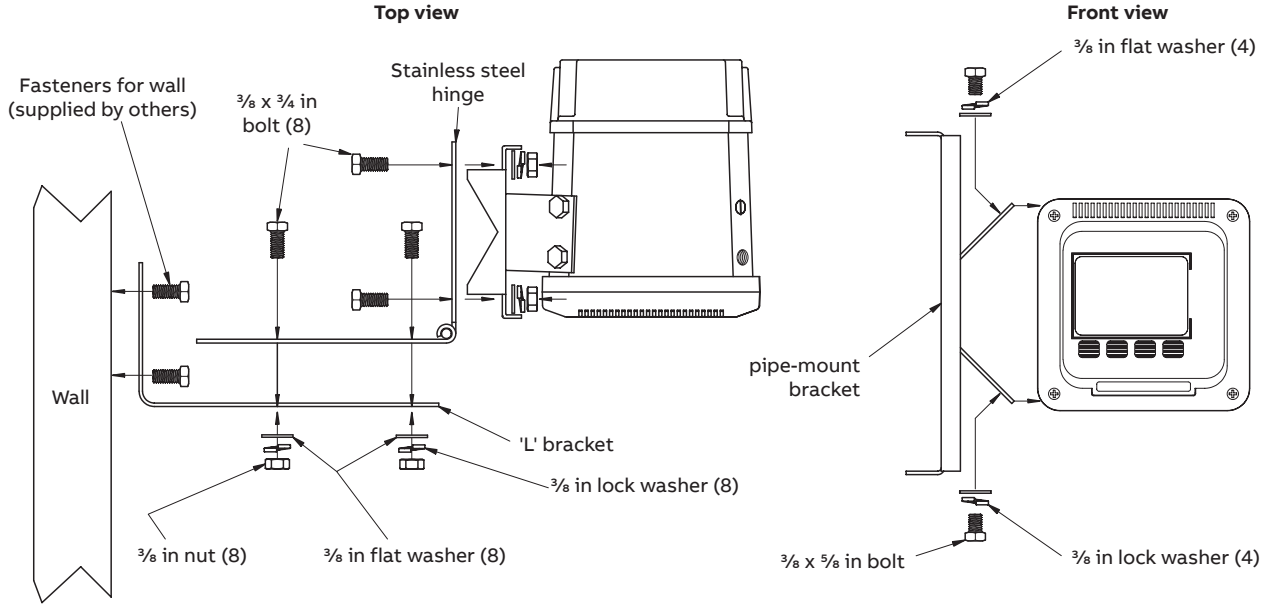

Electrical connections

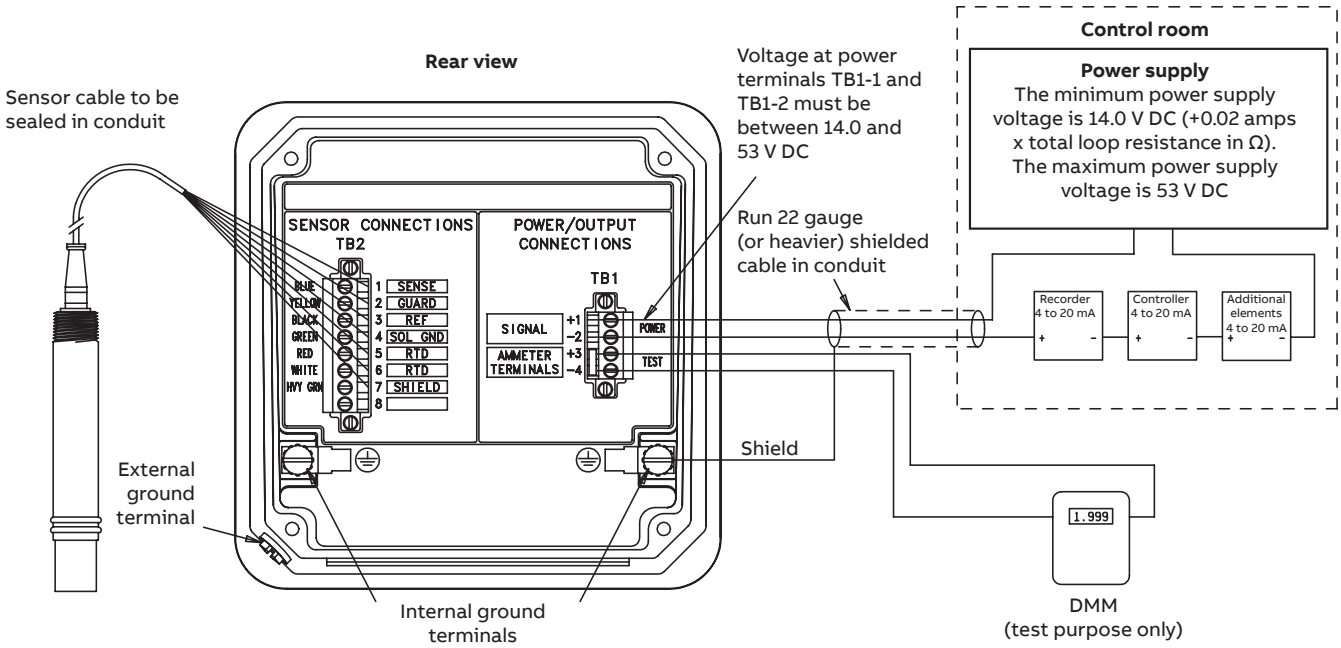

Ordering information

2-wire conductivity transmitter – base model	**TB82**	**PH**	**X**	**X**	**1**	**0**	**X**	**X**	**X**
Input type									
ph, ORP, pIon		PH							
Programming option[1]									
Basic			1						
Advanced			2						
Digital communications option									
None (analog only)				0					
HART				1					
FOUNDATION Fieldbus				2					
PROFIBUS PA				3					
Lightning suppressor									
Included					1				
Housing type									
Powder-coated aluminum						0			
Mounting options									
None							0		
Pipe							1		
Wall / Hinge (rear mount)							2		
Panel							3		
Wall (side mount)							4		
Agency approvals									
None								0	
FM (Factory Mutual)								1	
CSA (Canadian Standards Association)								2	
ATEX								3	
Tag									
None									0
Stainless steel									1
Mylar									2

[1] Advanced programming option must be selected for HART, FOUNDATION Fieldbus or PROFIBUS PA digital communication option

Accessories

Panel-mount kit:	4TB9515-0123
Pipe-mount kit:	4TB9515-0124
Hinge-mount kit:	4TB9515-0125
Wall-mount kit:	4TB9515-0156
BNC adaptor	4TB9515-0164
BNC adaptor with liquid-tight cable fittings	4TB9515-0166

Acknowledgements

- Mylar is a registered trademark of Dupont Teijin Films.
- HART is a registered trademark of the HART Communication Foundation.
- PROFIBUS is a registered trademark of PROFIBUS and PROFINET International (PI).
- FOUNDATION is a registered trademark of the Fieldbus foundation

Sales

Service

Castel Maggiore (BO) 40013
Via Lirone 60/i

e-mail: info@eurotecsrl.com
Tel: +39 051/6321595
Website: www.eurotecsrl.com

C.F.: 04103780377
P.I.: 01596581205

—

ABB Limited
Measurement & Analytics
Oldends Lane, Stonehouse
Gloucestershire, GL10 3TA
UK
Tel: +44 (0)1453 826 661
Fax: +44 (0)1453 829 671

ABB Inc.
Measurement & Analytics
125 E. County Line Road
Warminster, PA 18974
USA
Tel: +1 215 674 6000
Fax: +1 215 674 7183

abb.com/measurement

—

We reserve the right to make technical changes or modify the contents of this document without prior notice. With regard to purchase orders, the agreed particulars shall prevail. ABB does not accept any responsibility whatsoever for potential errors or possible lack of information in this document.

We reserve all rights in this document and in the subject matter and illustrations contained therein. Any reproduction, disclosure to third parties or utilization of its contents – in whole or in parts – is forbidden without prior written consent of ABB.

© Copyright 2018 ABB.
All rights reserved.

3KXA162801R1001

DS/TB82PH-EN Rev. H 07.2018