ABB MEASUREMENT & ANALYTICS | DATA SHEET

TB404

Toroidal conductivity sensors

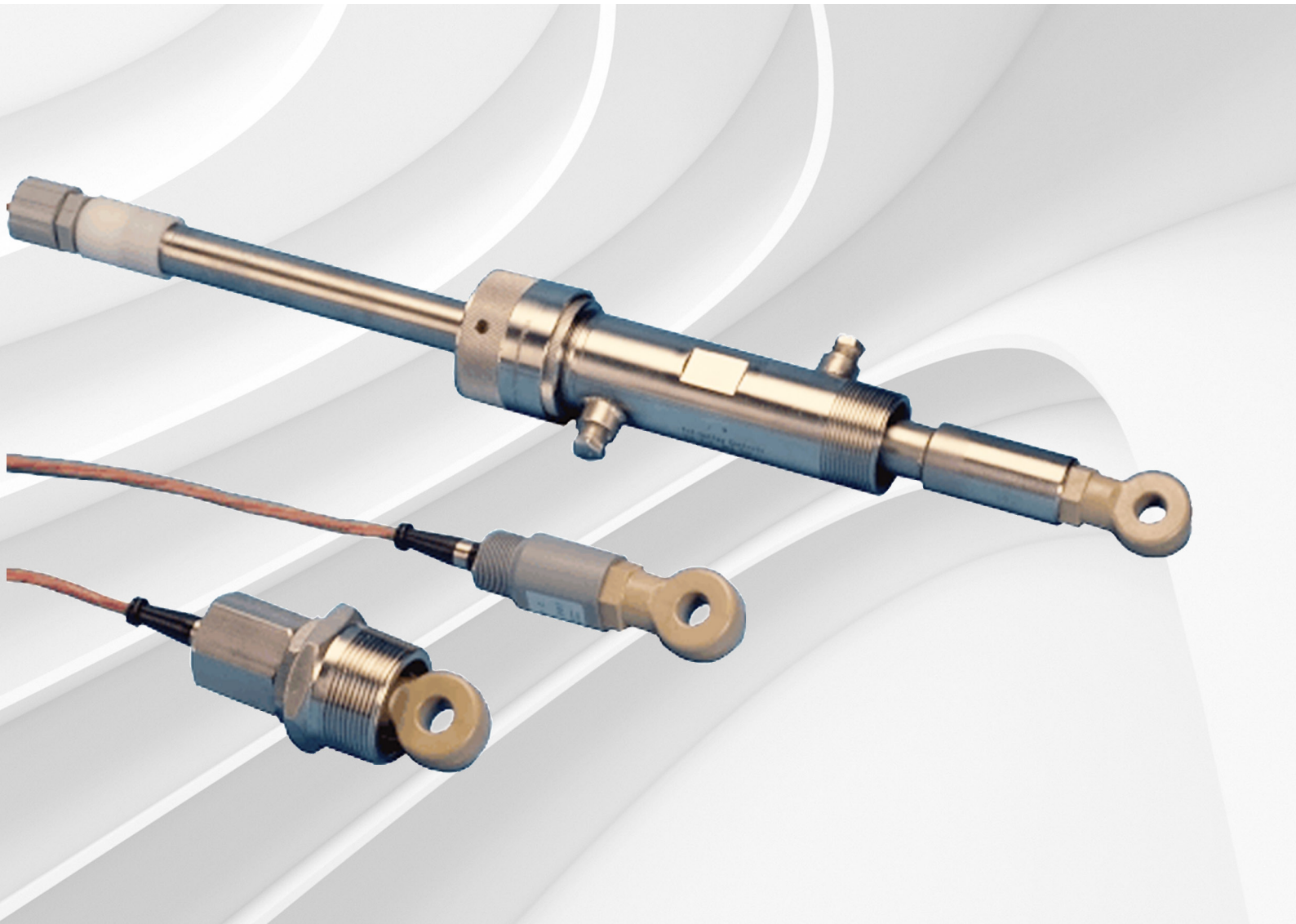

Measurement made easy

Perfect for use in standard to highly corrosive solutions

Greatly reduces coating and other fouling problems
- inductive measurement technique yields a solution conductivity measurement virtually unaffected by solution contaminants

Multi-range capability
- measures from 400 µS/cm to 2,000 mS/cm

Versatile mounting
- hardware for submersion, 1½ in In-line and low and high pressure ball valve insertion

Automatic temperature compensator with fast thermal response

Small size with large center bore
- enables 1½ in mounting, yet center bore is 50 % larger than comparatively sized sensors

PEEK encapsulation
- assure chemical resistance and durability

High pressure and temperature ratings
- up to 200 °C (392 °F), 2,070 kPag (300 psig) depending on mounting hardware and materials

316 stainless steel, Kynar®, titanium and CPVC hardware
- available to fit all applications

General description

TB404 toroidal conductivity sensors expand the advancements in process conductivity measurement initiated by ABB with four-electrode conductivity measurement. Unlike four-electrode sensors, toroidal sensors have no electrodes.

The TB404 toroidal conductivity sensor provides a means for measuring solution conductivity in chemically aggressive solutions that corrode, foul or otherwise destroy electrode type sensors. The sensor itself comprises two wound toroids encapsulated in a chemically resistant nonconductor made of polyether-ether ketone (PEEK). Measurement is made inductively via magnetic coupling between the solution and the toroids. Because measurement is made inductively, without electrodes that can be affected by erroneous resistances from foulants or coatings, these sensors are virtually impervious to all but thick layers of foulants.

Toroidal conductivity measurement is applicable to a wide variety of industrial process needs including:

- sewer and condensate monitoring
- pulping and sugar liquors
- chemical concentration monitoring
- liquids containing algae
- cleaning and clean-in-place solutions
- food and pharmaceutical installations
- liming applications
- brine
- solutions with solids and / or high ionic strength
- and countless other applications

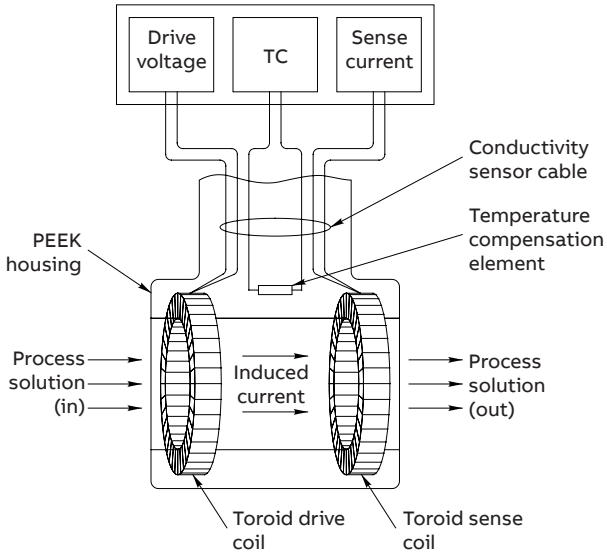

Figure 1 Toroidal conductivity measurement

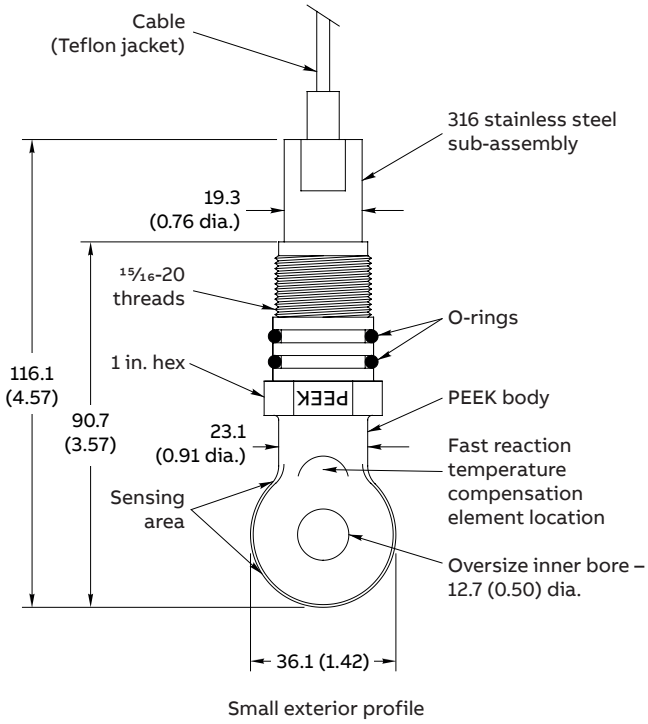

Figure 2 TB404 toroidal conductivity sensor

Toroidal conductivity theory

Toroidal (sometimes referred to as electrodeless or inductive) conductivity measurement is performed without using any electrodes in contact with the solution. Instead the sensor is comprised of two wound toroids encapsulated in PEEK.

The conductivity instrument supplies a constant drive to one of the two toroids. This drive toroid generates a strong magnetic field in the solution. Since the solution forms a continuous loop around the two toroids, the current induced into the solution by the drive toroid couples with the second toroid. This second or sense toroid then emits a current that varies directly with the amount of coupling occurring through the solution. Since the induced current varies proportionally with the conductance of the solution, the signal measured by the sense toroid is directly related to solution conductivity.

Toroidal conductivity measurement is made through a non-conductive material, so it is not affected by coatings or scales that add resistance and error to conventional conductivity measurements. The toroidal measurement is compromised only when coatings accumulate thick enough to significantly obscure the cross sectional area of the solution loop.

Materials

The wetted area of the TB404 toroidal conductivity sensor is completely encapsulated in PEEK, one of the most durable thermoplastics used in industry. The interior of the sensor contains 316 stainless steel and high temperature epoxy assuring compatibility with all processes. With such combinations of material, the TB404 toroidal conductivity sensor offers bullet-proof performance and reliability.

Temperature compensation

Solution conductivity is greatly affected by temperature. Compensation for the effects of temperature on solution conductivity (temperature compensation) is accomplished by a resistive temperature detector (RTD) in the sensor and circuitry in the associated instrument.

Temperature response of the sensor is excellent as the RTD is placed directly in the process with the sensor toroids. Only extremely durable RTDs, rated well above the 200 °C (392 °F) sensor rating, are used to ensure total reliability.

Submersible

The sensor is readily adaptable to submersion applications. Order the sensor with a CPVC, 316 stainless steel or Kynar submersible adapter. The adapter has a female thread that matches the rear threads of the sensor and a male ¾ in NPT for attachment to a ¾ in submersion rod. The rod (or pipe) is required for protecting the sensor cable and for holding the sensor in a fixed, submersed position.

The submersion style is used for measurement in open streams, containers, ponds, basins, lagoons and similar locations. It can also be used for top mounting in sealed containers.

Range

- Min. 0 to 400 µS/cm
- Max. 0 to 2,000 mS/cm depending on instrument chosen

Temperature

- Max. 200 °C (392 °F) with 316 stainless steel adapter
- Max. 140 °C (284 °F) with Kynar adapter
- Max. 80 °C (176 °F) with CPVC adapter

Pressure

Max. 689 kPag (100 psig)

Figure 3 TB404 with PVC submersible adapter

High pressure ball valve insertion

The TB404 high pressure ball valve insertion (hot tap) sensor enables direct installation of the sensor in process lines and vessels above 2068 kPa (300 psi). The sensor is installed through a 1½ in full port ball valve. It can be safely inserted or removed without draining or depressurizing the process piping or vessel.

This sensor assembly differs from the low pressure version by the size of the insertion rod and addition of a retraction chamber. A ½ in diameter insertion rod is held in place by a compression fitting. The small diameter enables insertion at high pressures despite the large size of the sensor because the difference in pressure is only across the ½ in cross sectional area of the rod.

The sensor is retracted into a chamber that contains two ¼ in NPT flushing ports that enable solids and / or hazardous chemicals to be purged. The ports can also be used for pressurizing the assembly before insertion.

Range

- Min. 0 to 400 µS/cm
- Max. 0 to 2,000 mS/cm depending on instrument chosen

Temperature

Max. 150 °C (302 °F)

Pressure

Max. 2,070 kPag (300 psig)

Seals

Teflon ferrule in compression fitting,
o-rings per sensor nomenclature

Materials

316 stainless steel and titanium

Process connection

1½ in NPT with ABB-supplied valve
(titanium ball valve supplied by customer)

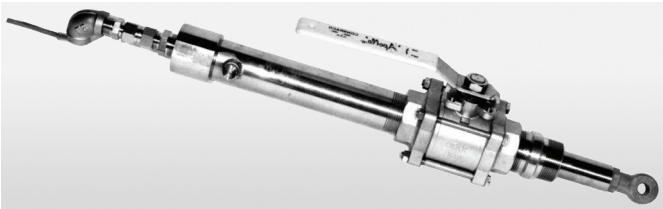

Figure 4 High pressure ball valve insertion sensor

In-line flow sensor

The In-line flow adapter enables the TB404 sensor to be mounted easily inside process piping or vessels. Available in CPVC, 316 stainless steel or titanium versions, this three-piece adapter has an integral 1½ in NPT male process connection.

The TB404 sensor mounts inside the flow adapter via its rear threads. The o-rings on the sensor provide a seal from the process. A retainer nut is used to align the sensor to the process flow and hold the sensor in the adapter. A Viton® gasket is used to seal this retainer.

Range

- Min. 0 to 400 µS/cm
- Max. 0 to 2,000 mS/cm depending on instrument chosen

Temperature

- Max. 200 °C (392 °F) with 316 stainless steel adapter
- Max. 200 °C (392 °F) with titanium adapter
- Max. 65 °C (149 °F) with CPVC adapter

Pressure

- Max. 2,070 kPag (300 psig) for 316 stainless steel
- Max. 2,070 kPag (300 psig) for titanium
- Max. 689 kPag (100 psig) for CPVC

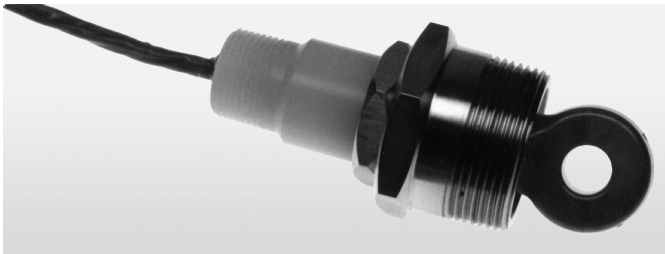

Figure 5 TB404 with In-line flow adapter

Low pressure ball valve insertion

The TB404 low pressure ball valve insertion (hot tap) sensor enables the sensor to be installed easily in process lines and vessels. The sensor is installed through a 1½ in full port or 2 in ball valve. It can be safely inserted or removed from the process without draining or depressurizing the piping or vessel.

The sensor fits into a 1 in diameter insertion rod and is sealed into it by its o-rings. The insertion rod is held in place by a compression fitting that screws into the valve. Two types of compression fitting are available; a wrench type that requires that the fitting be taken out of the valve before the sensor assembly can be removed and a hand-tight fitting that enables a quick disconnect from the process without tools.

Both compression fittings have two ¼ in NPT ports that enable solids and / or hazardous chemicals to be flushed from the assembly. The ports can also be used for pressurizing the assembly to make insertion easier.

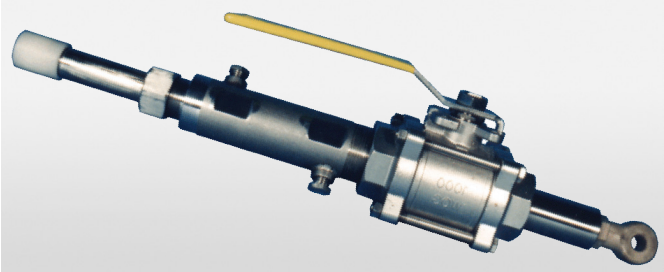

Figure 6 Low pressure ball valve insertion with wrench-tight compression fitting

Figure 7 Low pressure ball valve insertion with hand-tight compression fitting without valve

Range

- Min. 0 to 400 µS/cm
- Max. 0 to 2,000 mS/cm
  depending on instrument chosen

Temperature

Max. 150 °C (302 °F)

Pressure

Max. 689 kPag (100 psig)

Seals

Teflon ferrule in compression fitting,
o-rings per sensor nomenclature

Materials

316 stainless steel and titanium

Process connection

1½ in NPT with ABB-supplied valve
(titanium ball valve supplied by customer)

Installation

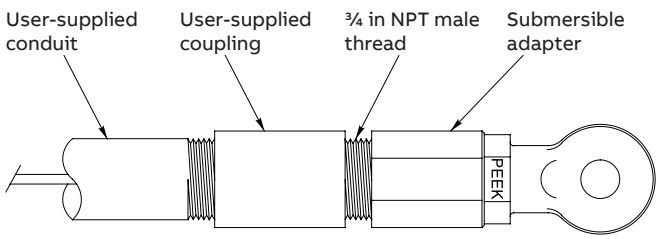

Figure 8 TB404 sensor with submersion assembly

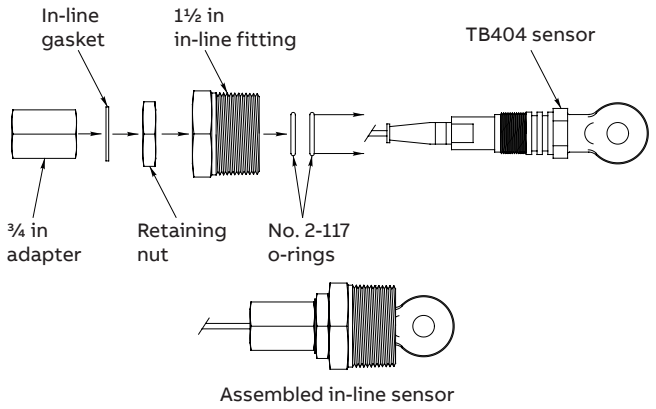

Figure 9 TB404 sensor with in-line flow assembly

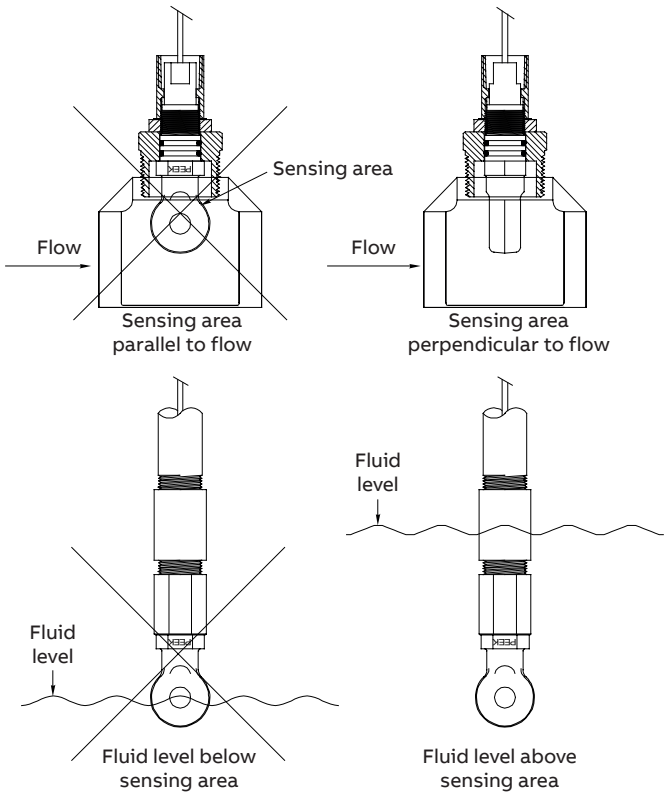

Figure 10 Installation

Dimensions

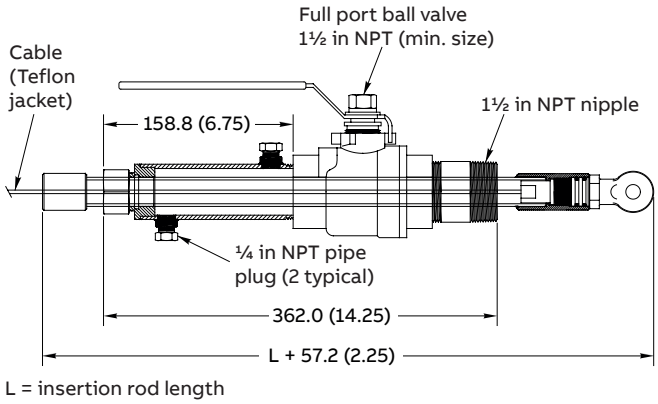

Figure 11 Hot tap sensor with wrench-tight compression fitting

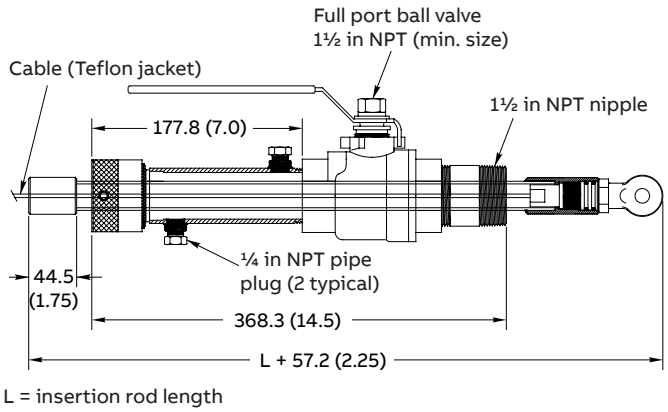

Figure 12 Hot tap sensor with hand-tight compression fitting

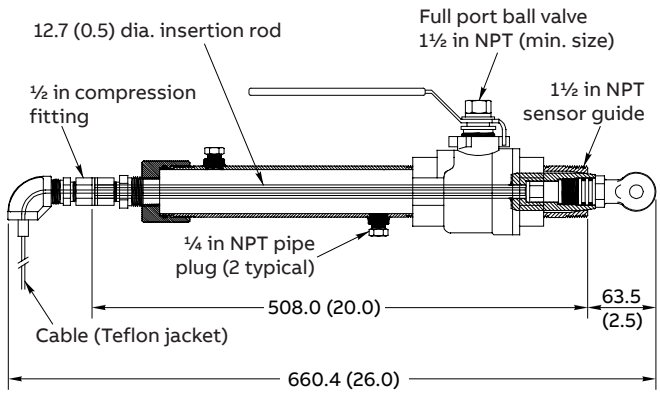

Figure 13 High pressure ball valve insertion sensor assembly

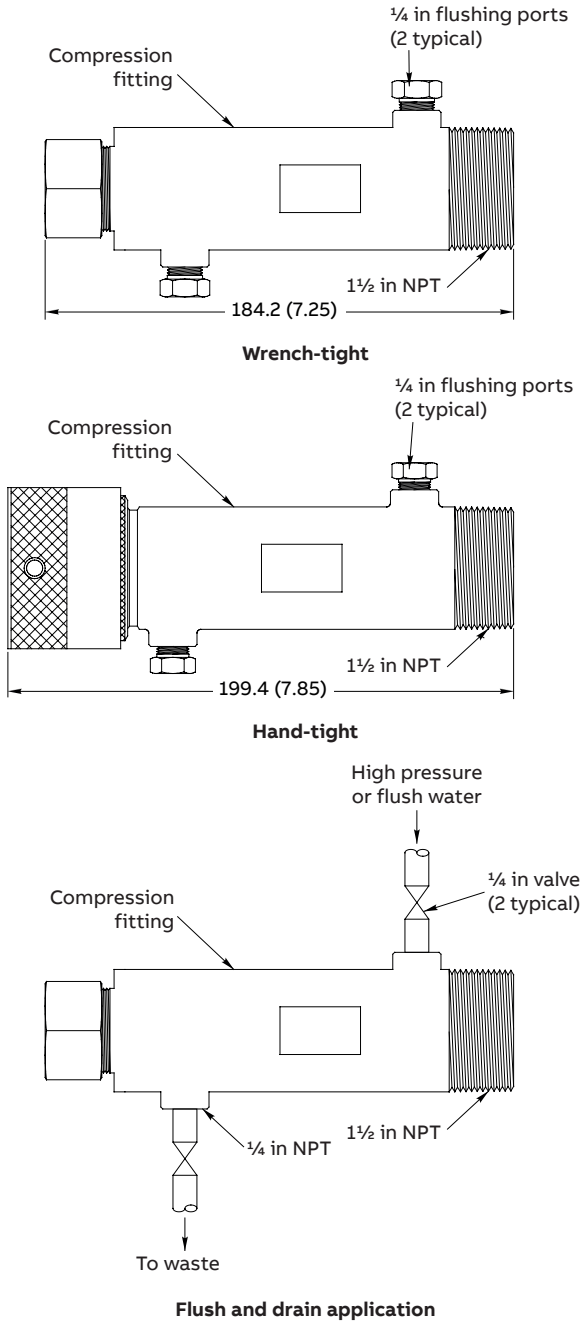

Figure 14 Flush and drain and/or pressurized compression hardware

Ordering information

Toroidal conductivity sensor	**TB404**	**X**	**X**	**X**	**XX**	**X**	**X**	**X**
Sensor style								
Standard with 15⁄16 in - 20 threads, PEEK		2						
Integral temperature compensation element [1]								
Pt1000			2					
O-ring material [2]								
EPDM (TB4042 only)				1				
Viton (TB4042 only)				2				
Kalrez (flow, submersible, or replacement sensors [TB4042] only)				3				
Kalrez (hot tap sensors only)				4				
Hardware								
Submersible adapter, ¾ in MNPT, CPVC					S1			
Submersible adapter, ¾ in MNPT, 316 stainless steel					S2			
Submersible adapter, ¾ in MNPT, Kynar					S3			
In-line flow, 1½ in MNPT, CPVC					F1			
In-line flow, 1½ in MNPT, 316 stainless steel					F2			
In-line flow, 1½ in MNPT, titanium					F3			
Low pressure hot tap without valve, wrench-tight compression fitting, 316 stainless steel [2,3]					L1			
Low pressure hot tap without valve, hand-tight compression fitting, 316 stainless steel [2,3]					L2			
Low pressure hot tap without valve, wrench-tight compression fitting, titanium					L3			
Low pressure hot tap without valve, hand-tight compression fitting, titanium [2,3]					L4			
High pressure hot tap with valve, 316 stainless steel [2,3]					H1			
High pressure hot tap with valve, titanium [2,3]					H3			
Low pressure hot tap insertion rod [4]								
None						0		
508 mm (20 in), 316 stainless steel						1		
610 mm (24 in), 316 stainless steel						2		
762 mm (30 in), 316 stainless steel						3		
914 mm (36 in), 316 stainless steel						4		
508 mm (20 in), titanium – grade 2						5		
610 mm (24 in), titanium – grade 2						6		
762 mm (30 in), titanium – grade 2						7		
914 mm (36 in), titanium – grade 2						8		
Cable length in m (ft) [5]								
1.5 (5)							0	
3.0 (10)							2	
4.6 (15)							3	
6.1(20)							4	
9.1 (30)							5	
12.2 (40)							6	
15.2 (50)							7	
Identification tag								
None								0
Mylar								1
Stainless steel								2

Notes.

[1] A Pt 1000 temperature compensator is required for ABB TB8 instrumentation

[2] A '4' must be used for the o-ring material if hot tap hardware and compression fittings are ordered and Kalrez o-rings are required.

[3] 1½ in full port, 316 stainless steel ball valves are available from the factory, part number 4TB5205-0285 (see accessories). 1½ in full port ball valve is the minimum acceptable size.

[4] An insertion length must be specified for all sensors having an L1, L2, L3, or L4 designation. Type of material designated must match the material selected in the **Hardware** section.

[5] Interconnecting cable, sensor to conductivity instrument, part number 4TB3004-0008 cable grips for junction box part no. 4TB9515-0244, may be ordered separately

Acknowledgements

- Kynar is a registered trademark of Arkema Inc.
- Teflon and Viton are registered trademarks of the Chemours Company.

Sales

Service

Castel Maggiore (BO) 40013
Via Lirone 60/i

e-mail: info@eurotecsrl.com
Tel: +39 051/6321595
Website: www.eurotecsrl.com

C.F.: 04103780377
P.I.: 01596581205

—

ABB Limited
Measurement & Analytics
Oldends Lane, Stonehouse
Gloucestershire, GL10 3TA
UK
Tel: +44 (0)1453 826 661
Fax: +44 (0)1453 829 671
Email: instrumentation@gb.abb.com

ABB Inc.
Measurement & Analytics
125 E. County Line Road
Warminster, PA 18974
USA
Tel: +1 215 674 6000
Fax: +1 215 674 7183

abb.com/measurement

—

We reserve the right to make technical changes or modify the contents of this document without prior notice. With regard to purchase orders, the agreed particulars shall prevail. ABB does not accept any responsibility whatsoever for potential errors or possible lack of information in this document.

We reserve all rights in this document and in the subject matter and illustrations contained therein. Any reproduction, disclosure to third parties or utilization of its contents – in whole or in parts – is forbidden without prior written consent of ABB.

© 2018 ABB.
All rights reserved.

3KXA111402R1001

DS/TB404-EN Rev. F 10.2018