ABB MEASUREMENT & ANALYTICS | DATA SHEET

Spirit^{IT} Flow-X series

Flow computer

For high accuracy measurement data

Highest accuracy in flow computing
- Unique 4-20 mA inputs with HART accuracy
- High accuracy clock and time measurement
- Supports the latest calculations, e.g. AGA-8 Part 2
- 64-bit resolution from input to output

Cost-effective
- A single module handles up to 3 gas or 2 liquid meter runs

All the data you ever need
- 4 sets of period data plus, for liquid, batch data
- Recalculated ticket data for liquid
- Mass, volume, energy totals per component

Simple
- One and the same module used for all enclosures
- No hardware switches, fully software configurable

Secure
- Personal user accounts to prevent unauthorized access
- Audit trail shows the actual person

Flexible
- Panel mount, DIN-rail mount, wall mount and 19” rack
- Connects to any Modbus and HART field device
- Web API
- Highy customizable (displays, reports, archives, comms)

Complete
- Bi-directional flow
- Support for two provers
- Extensive control functions
- Multi-lingual operator interface

Flow-X/M - Flow computer module

The Flow-X/M module is the core element of the Flow/X series and provides a complete flow computer for gas and liquid flow measuement. The module is placed in one of the Flow-X enclosures, except for the Flow-X/C.

Multistream capability

Support for 3 gas or 2 liquid meter runs per module

Physical

Weight±

0.8 kg (1.7 lb)

Dimensions (w x h x d)

50 x 166 x 115 mm (2.0 x 6.5 x 4.5 inch)

System

CPU and memory

800 MHz, 512 MB RAM, 1024 MB flash

Clock

Real-time clock, accuracy better than 1 sec/day

Gold cap for date and time retention

Watchdog

Hardware and software watchdog timer

Display & buttons

Display type

Graphical 196 x 64 pixel LCD.

White LED, 100 step dimmable

Buttons

4 navigation buttons

Tamper switch

Mechanical tamper switch to prevent changing of the application and vital parameters within that application.

I/O per Flow-X/M module

I/O type	Amount	Specifications
Analog inputs*	6	Analog transmitter input, high accuracy Input types are 4 to 20mA, 0 to 20mA, 0 to 5V, 1 to 5V Accuracy mA inputs; 0.002% FS at 21°C, 0.008% at full ambient range of 0-60°C, long-term stability 0.01%/year Resolution 24 bits. Analog inputs share same ground floating in relation to all other electronics.
4-wire PRT inputs	2	Resolution 0.02 °C for 100 ohms input. Error depending on range 0 to 50 °C: Error <0.05 °C or better –220 to +220 °C: Error <0.5 °C or better
HART*	4	Independent HART loop inputs, on top of 4 to 20 mA signals Support includes multi-drop for each transmitter loop, as well as support for redundant FC operation
Analog outputs	4	Analog output for process outputs and flow / pressure control. Resolution 14 bits, 0.075% FS. Analog outputs share same ground floating in relation to all other electronics.
Pulse Inputs**	4	Single or dual pulse input. Adjustable trigger level at various voltages. Frequency range up to 10 kHz (single) or 5kHz (dual). Compliant with ISO6551, IP252, and API 5.5. True Level A and level B implementation.
Density/viscosity**	4	Periodic time input, 100µs to 5000µs. Resolution < 1ns
Digital inputs**	16	Digital status inputs. Resolution 100ns (10MHz)
Digital outputs**	16	Digital output, open collector (0.5A DC) Rating 100mA @24V
Pulse outputs**	4	Open collector, 0.01 to 500 Hz
Sphere detector inputs**	4	Supports 1, 2 and 4 detector configurations mode Resolution 100ns (10MHz)
Prover bus outputs**	1	Meter pulse output for remote proving flow computers. Resolution 100ns (1MHz)
Frequency outputs**	4	Frequency outputs for emulation of flow meter signals. Maximum frequency 10KHz, accuracy 0.1%
Serial	2	RS485 / RS232 serial input for ultrasonic meter, printer or generic, 115kb
Ethernet	2	RJ45 Ethernet interface, TCP/IP

Table 1 I/O per Flow-X/M module

*** Analog input = 6 (of which 4 support HART)**
****Total number of pulse inputs + digital inputs + digital outputs + pulse outputs + density inputs + sphere detector inputs + prover bus outputs + frequency outputs = 16**

Enclosures for the Flow-X/M

The Flow-X module can be used in several different enclosures. The Flow-X/S and Flow-X/K are single module enclosures providing respectively onboard wiring terminals and remote IO connectivity through 37 pins D-sub connectors. The Flow-X/P is a multi-stream flow computer with an integrated station module and touch screen and can hold up to 4 modules. The Flow-X/C is the compact version of the Flow-X/P with one module integrated into the enclosure. The Flow-X/R is a 19 inch rack enclosure for up to 8 modules.

	Flow-X/S	Flow-X/K	Flow-X/C	Flow-X/P	Flow-X/R
Type	DIN rail enclosure with direct field connection	Compact DIN rail enclosure	Compact panel enclosure	Panel enclosure for multi stream	Rack enclosure
Dimensions (h x w x d) [mm/inch]	250/9.8 x 142/5.6 x 164/6.5*	353/13.9 x 60/2.4 x 131/5.2*	237/9.3 x 139/5.5 x 142/5.6	235/9.3 x 137/5.4 x 322/12.7	355/14.0 x 482/19.0 x 135/5.3
Weight [kg/lbs]	2,5 / 5.4*	1,7 / 3.6*	2,7 / 6.0	3,7 / 8.2	5,0 / 11.0
Mount type	Wall / DIN rail	Wall / DIN rail / Rack**	Panel / Rack	Panel / Rack	Rack / Wall
Mount position	Horizontal & vertical	Vertical	Horizontal and vertical	Horizontal and vertical	Vertical
Interface	4 line LCD Web server	4 line LCD Web server	7 in. color touch screen*** Web server	7 in. color touch screen*** Web server	4 line LCD Web server
Max. Flow-X/Ms	1	1	1 (integrated)	4	8
Maximum I/O	2 x 39 screw terminals 2 x Ethernet 1 x 8 pin power	2 x 37 pin D-Sub 2 x Ethernet 1 x 4 pin power	1 x 9 pin D-sub 2 x 37 pin D-Sub 2 x Ethernet 1 x 4 pin power	3 x 9 pin D-sub 8 x 37 pin D-Sub 2 x Ethernet 1 x 4 pin power	16 x 37 pin D-Sub 16 x Ethernet 8 x 4 pin power****

Table 2 Enclosure comparison

*** With Flow-X/M module**
**** In combination with an DIN rail - Rack adapter**
***** Integrated in the enclosure**
****** Each individual stream module is individually, independently powered (24 V DC) and individually exchangeable**

Ordering Information

Enclosures	Number of modules	Exceptions	Mounting	Exceptions	Applications
S Flow-X/S	0	1	F : Front panel	3	**N** : None
C Flow-X/C	1	1	B : Back panel	3	**S** : Standard
P Flow-X/P	2	2			**C** : Custom
R Flow-X/R	3	2			
K Flow-X/K	4	2			
	5	3			
	6	3			
	7	3			
	8	3			

Accessories

B Flow-X/B Breakout board
GUI7 Flow-X/T 7" remote touch screen
GUI10 Flow-X/T 10" remote touch screen

Table 3 Ordering information

Exceptions
1 Not for enclosure C
2 Only for enlosures P and R
3 Only for enclosure R

Examples

Flow-X/R.4.F.S	Flow-X/R with 4 modules, front panel mounting and a standard application
Flow-X/P.2.C	Flow-X/P with 2 modules and a custom application
Flow-X/K.0	Flow-X/K enclosure without a module

System specifications

Environmental Data

Ambient operating temperature
0 to 60 °C
Storage temperature
–20 to 70 °C
Operating humidity
Max. 90% relative humidity, non-condensing
Sunlight
Store and operate out of direct sunlight

Power Supply

DC power supply
External, 24 V DC (± 10%), with redundant connections

Power Consumption

Flow-X/P0
Nominal 0.3 A
Startup peak 0.8 A
Flow-X/C
Nominal 0.5 A
Startup peak 1.0 A
Flow-X/M
Nominal 0.3 A
Startup peak 0.8 A

Communication protocols

Modbus RTU / ASCII Master and Slave
Modbus TCP Server and Client
HART Master
Web API

Flow meter diagnostics

ABB CoriolisMaster
SICK FlowSic 600
SICK FlowSic 600XT
E+H Promass
Caldon LEFM 380CI
FMC MPU
GE Panametrics GF868
Faure Herman 8400
Q.Sonic plus
Micro Motion
AltoSonic V12
RMG USZ08

Gas analyzers

ABB NGC 8200 series
ABB BTU8100
Siemens Maxum
Siemens Sitrans
Danalyzer
Yamatake HGC
Encal 3000
Angus GQA

Density Meters

Solartron
Sarasota
UGC
Anton Paar (HART/Modbus)

Calculations

Liquid
API 11.1:2007 table 5, 6, 23, 24, 53, 54, 59 and 60
API 2540 ASTM D1250 table 5, 6, 23, 24, 53, 54
Historical 1952 table 5, 6, 23, 24, 53, 54
API 11.2.1, 11.2.2, 12.2, 21.1, 21.2
API 11.3.2.1 Ethylene (API-2565)
GPA TP15, TP16, TP25, TP27
Propylene (API 11.3.3.2)
Butadiene (ASTM D1550)
Ethylene (IUPAC 1988, NIST 1045, API 2565)
Carbon dioxide (NIST)
Ethanol / Alcohol (OIML R22)
Water (API 11.4.1, IAPWS-IF97)

Gas
AGA5, AGA8 Parts 1 and 2, AGA10
AGA-NX19
SGERG-88
GERG-2008
GOST 30319-2
GPA 2172
ISO 6976 (all editions)
GSSSD MR113
Wet gas (De Leeuw, Reader Harris)

Steam
IAPWS-IF97

Flow
ISO 5167-1, 2, 3 and 4 (all editions)
ISO/TR15377
AGA3, AGA7, AGA9, AGA11
V-cone

Regulatory compliance

EU Directives

2014/32/EU Measuring Instruments Directive
2014/30/EU Electromagnetic Compatibility Directive
2012/19/EU WEEE Directive (WEEE 2)
2011/65/EU RoHS

UL / CSA

CAN/CSA C22.2 No 61010-1: 2012/05/11 Ed:3
ANSI/UL 61010-1, Issued 2012/05/11 Ed:3

IEC Standards

IEC 60068-2-1
IEC 60068-2-2
IEC 60068-2-3
IEC 60068-2-31
IEC 60068-2-36
IEC 60654-2
IEC 61000-4-2 :2008
IEC 61000-4-3 :2006 + A1.2007 + A2:2010
IEC 61000-4-4:2012
IEC 61000-4-5:2015+ A1:2017
IEC 61000-4-6 :2014
IEC 61000-4-8:2009
IEC 61000-4-17:1999 + A1:2001 + A2:2008
IEC 61000-4-29:2000
IEC 61000-6-2:2016
IEC 61000-6-4:2001+ A1:2011

Flow-X/S specifications

Physical

Dimensions (w x h x d) (with module)
142 x 250 x 164 mm (5.6 x 9.8 x 6.5 inch)

Weight (with module)
2.5 kg (5.4 lbs)

Mounting options
Wall mounted, 4 screws
DIN rail, 2 rails

Modules
1

Streams (meter runs)
3 gas or 2 liquid

Connectors

Ethernet
2 x shielded 8 pole snap-in RJ45 connectors

Power
1 x 8 pole connector
(Phoenix Contact, MSTBVA 2,5/8-G-5.08)

I/O
2 x screw terminal strips with each 39 terminals
(Phoenix Contact, SMKDS 2,5/3-5,08)

Dimensions in mm [in.]

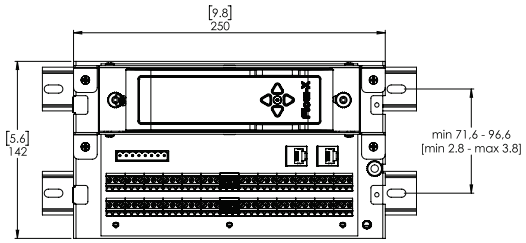

Figure 1 Horizontal DIN rail mount

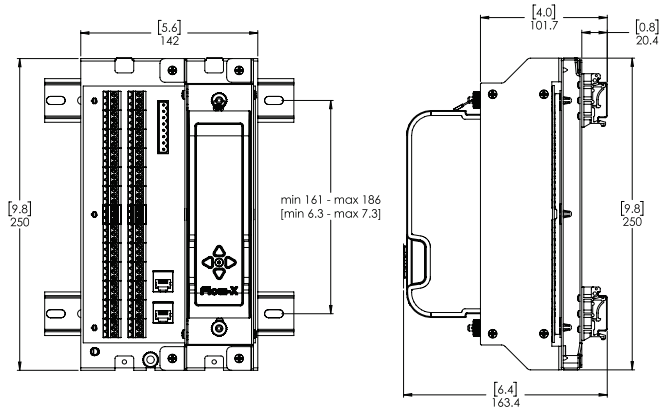

Figure 2 Vertical DIN rail mount

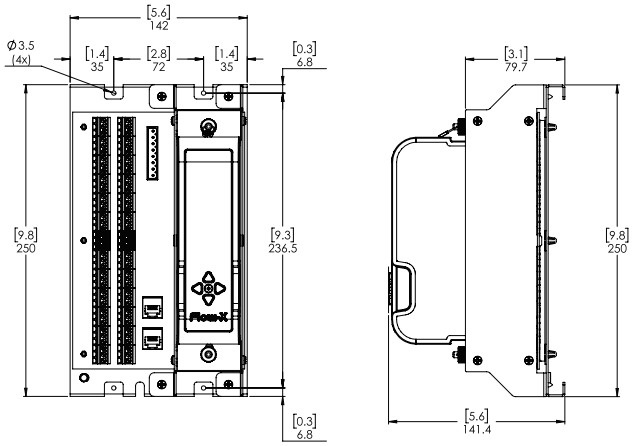

Figure 3 Wall mount

Flow-X/K specification

Physical

Dimensions (w x h x d) (with module)
60 x 353 x 131 mm (2.4 x 13.9 x 5.2 inch)
Weight (with module)
1.7 kg (3.6 lbs)
Mounting options
Wall mounted, 4 screws
DIN rail, 2 rails
8 Height units (U) in a 19 inch rack (with DIN rail adapter)
Modules
1
Streams (meter runs)
3 gas or 2 liquid

Connectors

Ethernet
2 x shielded 8 pole snap-in RJ45 connectors
Power
1 x 4 pole connector
(Phoenix Contact, MSTBVA 2,5/4-G-5.08)
I/O
2 x 37-pin D-sub female connectors

Dimensions in mm [in.]

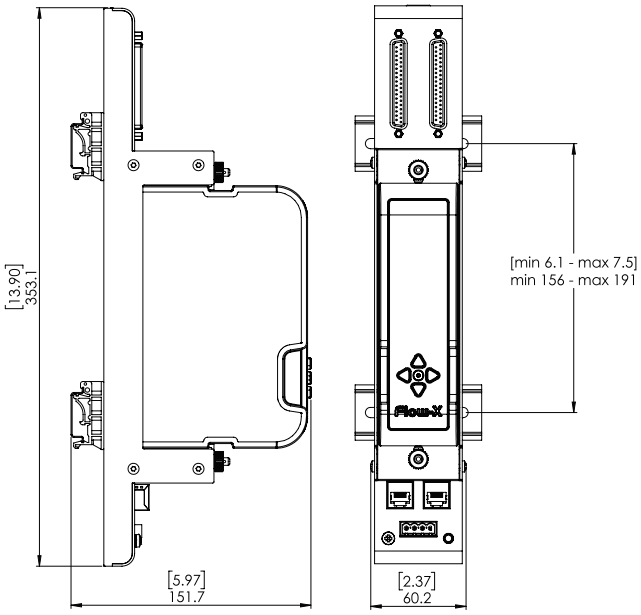

Figure 4 DIN rail mount

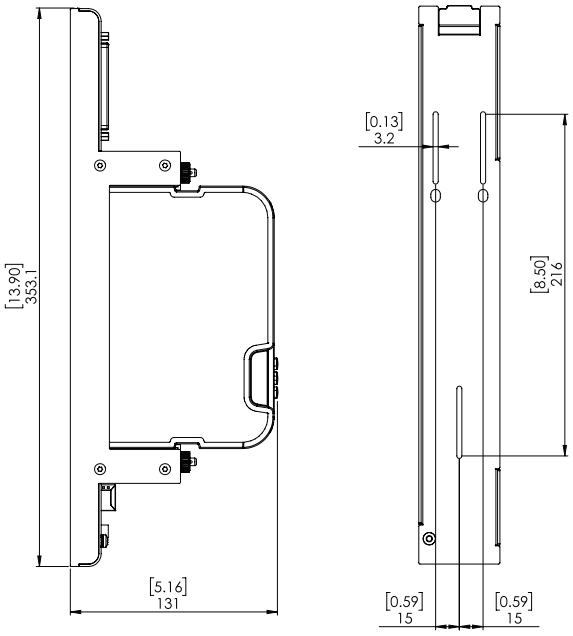

Figure 5 Wall mount

Flow-X/C specification

Physical

Dimensions (w x h x d)
139 x 237 x 142 mm (5.5 x 9.3 x 5.6 inch)

Weight
2.7 kg (6.0 lbs)

Mounting options
Enclosure is delivered with mounting bracket for installation in a cabinet (Panel mounted)

Modules
1 (integral part of the enclosure)

Streams (meter runs)
3 gas or 2 liquid

Connectors

Ethernet
2 x shielded 8 pole snap-in RJ45 connectors

Power
1 x 4 pole connector
(Phoenix Contact, MSTBVA 2,5/4-G-5.08)

I/O
1 x 9-pin D-sub male connector
2 x 37-pin D-sub female connectors

Dimensions in mm [in.]

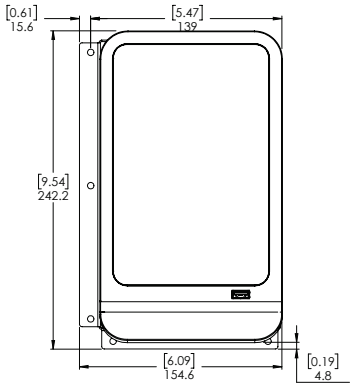

Figure 6 Front view with bracket

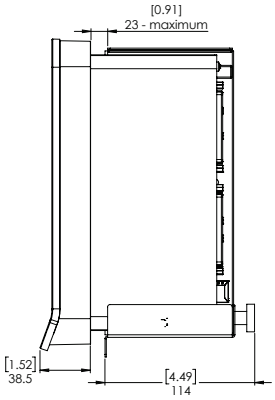

Figure 8 Side view with bracket

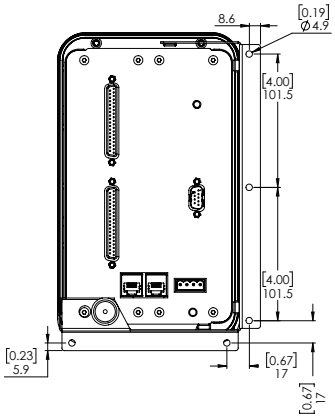

Figure 7 Rear view with bracket

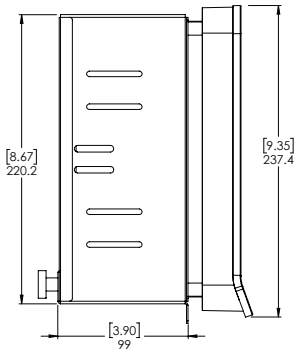

Figure 9 Side view with bracket

Flow-X/P specification

Physical

Dimensions (w x h x d) (without bracket)
137 x 235 x 322 mm (5.4 x 9.3 x 12.7 inch)

Weight
3.7 kg (8.2 lbs)

Mounting options
Enclosure is delivered with mounting bracket for installation in a cabinet (Panel mounted)

Modules
0 to 4

Streams (meter runs)
3 gas or 2 liquid per module

Connectors

Ethernet
2 x shielded 8 pole snap-in RJ45 connectors

Power
1 x 8 pole connector
(Phoenix Contact, MSTBVA 2,5/8-G-5.08)

I/O
3 x 9-pin D-sub male connectors
8 x 37-pin D-sub female connectors

Dimensions in mm [in.]

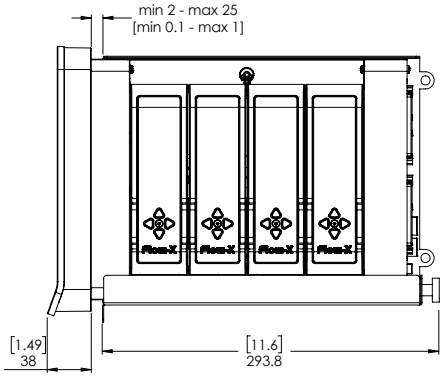

Figure 10 Side view with bracket

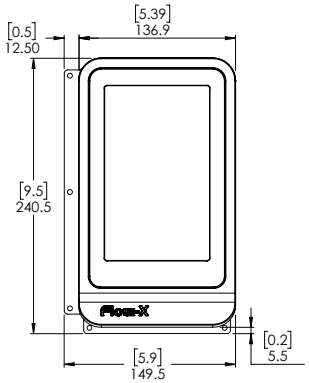

Figure 11 Front view with bracket

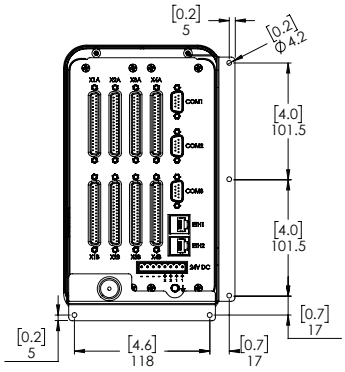

Figure 12 Rear view with bracket

Flow-X/R specifications

Physical

Dimensions (w x h x d)
482 x 355 x 135 mm (19.0 x 14.0 x 5.3 inch)

Weight
5.0 kg (11.0 lbs)

Mounting options
Front mounted for in a 19 inch rack (8 Height units U) (Figure 16)
Back mounted for wall mounting (Figure 17)

Modules
1 to 8

Streams (meter runs) per module
3 gas or 2 liquid

Connectors

Ethernet
16 x shielded 8 pole snap-in RJ45 connectors

Power
8 x 4 pole connector
(Phoenix Contact, MSTBVA 2,5/4-G-5.08)

I/O
16 x 37-pin D-sub female connectors

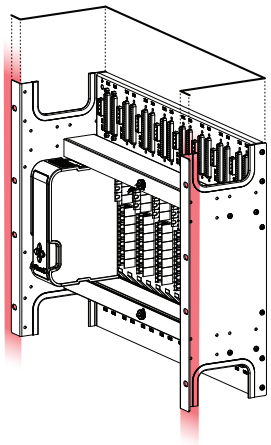

Figure 15 Front mounted (Rack)

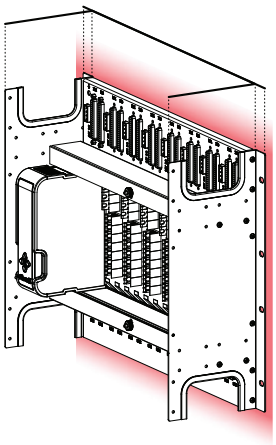

Figure 16 Back mounted (Wall)

Dimensions in mm [in.]

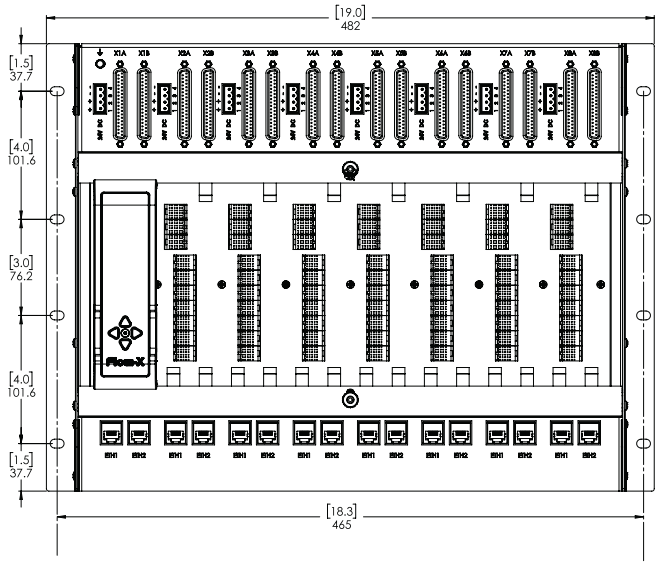

Figure 13 Front view

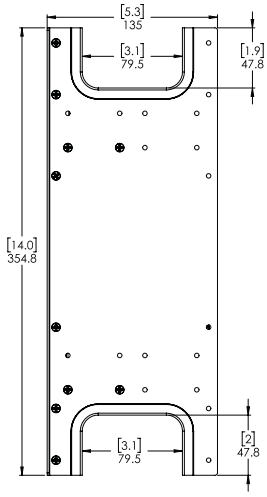

Figure 14 Side view

Flow-X/T specification

External Touch screen

The Flow-X/T is a color touch screen mountable in a panel. We deliver them in 2 sizes: 7 inch and 10.4 inch.
Operator interface for Flow-X/S, Flow-X/K and Flow-X/R enclosures.

Physical

Weight
0.7kg (1.43 lbs) | 1.7 kg (3.75 lbs)
Dimensions (w x h x d)
222 x 152 x 56 mm (8.7 x 6.0 x 2.2 inch)
280 x 227 x 56 mm (11.0 x 8.9 x 2.2 inch)
Mounting options
Panel installation with mounting brackets (included)
Panel cutout, see figure 16 & 17 on the next page
Operating temperature
0 °C ~ 70 °C

EMI/EMC Certifications

CE/FCC/KCC Class A

Display

Display Type
7” TFT-LCD (800 x 480 px) | 10.4” TFT-LCD (800 x 600 px)
Backlight
LED Backlight (ON/OFF switchable)
Touch
4 wire resistive panel

Connectors

Ethernet
1 x RJ-45 (100 Base-TX)
Power
12V ~ 24 V DC (500mA | 800mA)

Compatible with

All Spirit^ITFlow-X computers

Dimensions in mm (in.)

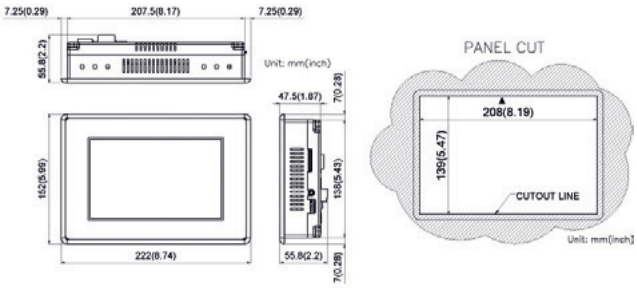

Figure 17 Dimensions External Touch screen 7 inch

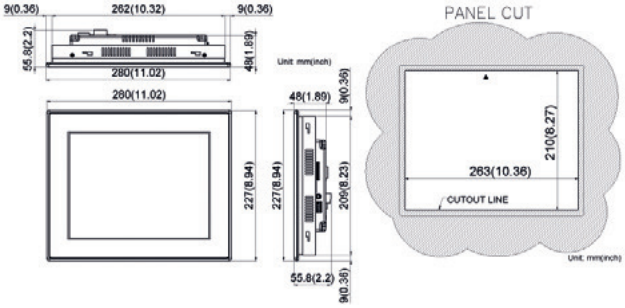

Figure 18 Dimensions External Touch screen 10.4 inch

Flow-X/B specifications

Break out board

Breakout board with pull-up resistors, fuses & relays[1] for easy field connectivity and to protect the flow computer from any misuse or field influence. Embedded green and red LED lights for simple signal overview of flow equipment. One Flow-X/B board is required for each 37-pin D-Sub connector.

Physical

Dimensions (w x h x d)
177 x 130 x 55 mm (7.0 x 12.2 x 2.2 inch)

Weight
1.2 kg (2.6 lbs)

Mounting options
Wall mounted, 4 screws

Connectors

Power
1 x 5 pole header and plug connector

Field I/O
8 x 5 pole header and plug connector (DI)
2 x 3 pole header and plus connector (AO)
3 x 3 pole header and plug connector (AI)
1 x 4 pole header and plug connector (PRT)
1 x 4 pole header and plug connector (I/O_GND)
(WE, Serie 311 & 3445-5.08mm)

Compatible with

All Spirit^IT Flow-X computers, except Flow-X/S
1 x 5 pole header & plug connector
(WE, Serie 311 & 3445-5.08mm)

Flow-X I/O
1 x 37-pin D-sub female connectors

Dimensions in mm [in.]

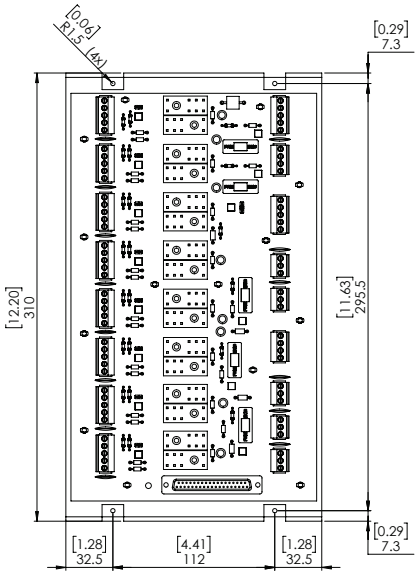

Figure 19 Front view

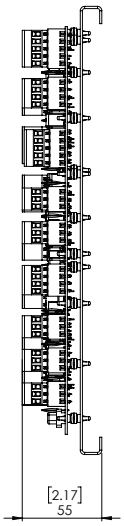

Figure 20 Side view

1 Fuses and relays are NOT included with the delivery of the Flow-X/B.

Terminal block specification

37 pin Sub D Terminal Block with cable

IO terminal block for Flow-X/P, Flow-X/K and Flow-X/R enclosures.

Type

DECA MOD-37-F02

Dimensions (w x h)

113 x 85,2 mm (4.4 x 3.4 inch)

Connectors

1 x 37-pin D-sub female connectors
1 x double row screw terminal strip with 37 terminals

Cable

1, 2 or 3 meter; straight or 45° angled

Compatible with

All Spirit^IT Flow-X computers, except Flow-X/S

Dimensions in mm

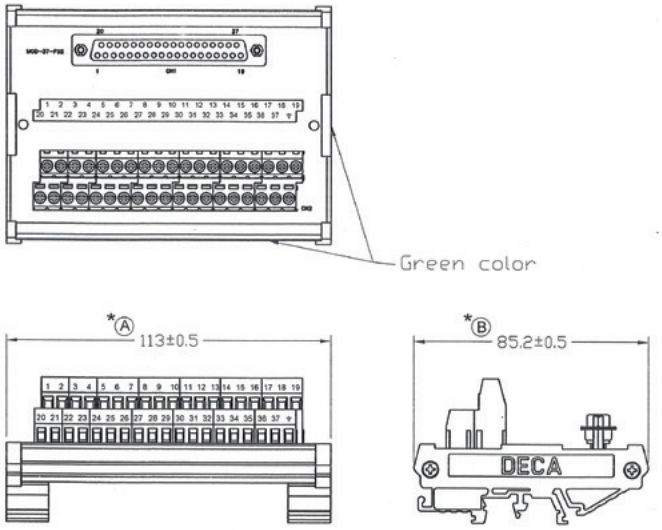

Figure 21 Dimensions terminal block

Connector overview

Connectors

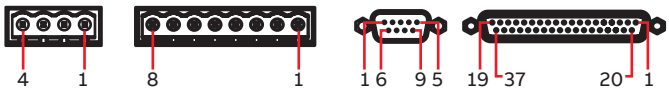

Power supply

4 pin power terminal

Pin	Description	
1	24V Primary	+1
2	24V Secondary	+2
3	0V	–
4	0V	–

8 pin power terminal

Pin	Description	
1	24V Primary	+1
2	24V Primary	+1
3	24V Secondary	+2
4	24V Secondary	+1
5	0V	–
6	0V	–
7	0V	–
8	0V	–

Screw terminals Flow-X/S

Connector A (X1A)

Pin	Description
1	24V out
2	0V, Digital common
3	Digital 1
4	0V, Digital common
5	Digital 2
6	0V, Digital common
7	Digital 3
8	0V, Digital common
9	Digital 4
10	0V, Digital common
11	Digital 5
12	0V, Digital common
13	Digital 6
14	0V, Digital common
15	Digital 7
16	0V, Digital common
17	Digital 8
18	0V, Digital common
19	24V out
20	0V, Digital common
21	Digital 9
22	0V, Digital common
23	Digital 10
24	0V, Digital common
25	Digital 11
26	0V, Digital common
27	Digital 12
28	0V, Digital common
29	Digital 13
30	0V, Digital common
31	Digital 14
32	0V, Digital common
33	Digital 15
34	0V, Digital common
35	Digital 16
36	0V, Digital common
37	24V out
38	0V, Digital common
39	24V out

Connector B (X1B)

Pin	Description
1	PRT 1 power +
2	PRT 1 signal +
3	PRT 1 signal –
4	PRT 1 power –
5	Analog input common
6	PRT 2 power +
7	PRT 2 signal +
8	PRT 2 signal –
9	PRT 2 power –
10	Analog input common
11	Analog input 1
12	Analog input common
13	Analog input 2
14	Analog input common
15	Analog input 3
16	Analog input common
17	Analog input 4
18	Analog input common
19	Analog input 5
20	Analog input common
21	Analog input 6
22	Analog input common
23	Analog output 1
24	Analog output common
25	Analog output 2
26	Analog output common
27	Analog output 3
28	Analog output common
29	Analog output 4
30	Analog output common
31	0V, Digital common
32	COM1 — | Sig + | Tx + *
33	COM1 Tx | Sig – | Tx – *
34	COM1 — | — | Rx – *
35	COM1 Rx | — | Rx + *
36	COM2 — | Sig + | Tx + *
37	COM2 Tx | Sig - | Tx – *
38	COM2 — | — | Rx – *
39	COM2 Rx | — | Rx + *

* RS-232 | RS-485 2 wire | RS-485 4 wire

D-SUB 9 connector (Male)

COM1

Pin	Description
1	
2	Rx
3	Tx
4	
5	0V
6	
7	RTS
8	CTS
9	

RS-232 only

COM2 & COM3**

Pin	Description
1	— | — | Rx – *
2	Rx | — | Rx + *
3	Tx | Sig – | Tx – *
4	— | Sig + | Tx + *
5	0V
6	
7	
8	
9	

* RS-232 | RS-485 2 wire | RS-485 4 wire
** Flow-X/C COM3 only

D-SUB 37 connector (Female)

Connector A

Pin	Description
1	COM1 — | Sig + | Tx + *
2	COM1 Tx | Sig – | Tx – *
3	COM1 — | — | Rx – *
4	COM1 Rx | — | Rx + *
5	24V out
6	Digital 1
7	0V, Digital common
8	Digital 2
9	0V, Digital common
10	Digital 3
11	0V, Digital common
12	Analog output 1
13	Analog output common
14	Analog input common
15	PRT 1 power +
16	PRT 1 signal +
17	PRT 1 signal –
18	PRT 1 power –
19	Analog input common
20	Digital 4
21	0V, Digital common
22	Digital 5
23	0V, Digital common
24	Digital 6
25	0V, Digital common
26	Digital 7
27	0V, Digital common
28	Digital 8
29	0V, Digital common
30	Analog output 2
31	Analog output common
32	Analog input 1
33	Analog input common
34	Analog input 2
35	Analog input common
36	Analog input 3
37	Analog input common

Connector B

Pin	Description
1	COM2 — | Sig + | Tx + *
2	COM2 Tx | Sig - | Tx – *
3	COM2 — | — | Rx – *
4	COM2 Rx | — | Rx + *
5	24V out
6	Digital 9
7	0V, Digital common
8	Digital 10
9	0V, Digital common
10	Digital 11
11	0V, Digital common
12	Analog output 3
13	Analog output common
14	Analog input common
15	PRT 2 power +
16	PRT 2 signal +
17	PRT 2 signal –
18	PRT 2 power –
19	Analog input common
20	Digital 12
21	0V, Digital common
22	Digital 13
23	0V, Digital common
24	Digital 14
25	0V, Digital common
26	Digital 15
27	0V, Digital common
28	Digital 16
29	0V, Digital common
30	Analog output 4
31	Analog output common
32	Analog input 4
33	Analog input common
34	Analog input 5
35	Analog input common
36	Analog input 6
37	Analog input common

Software applications

Application	Liquid_USC	Liquid_Metric	Gas_USC	Gas_Metric
	US Customary base units	Metric base units	US Customary base units	Metric base units
		MID certified		MID certified
Flow meter				
	Pulse input for Coriolis, ultrasonic, turbine and PD flow meters Pulse fidelity A and B		Pulse input for Coriolis, ultrasonic, turbine and Sensus Auto-Adjust turbine flow meters. Pulse fidelity A and B. HF/LF pulses.support	
	ABB CoriolisMaster, Endress+Hauser ProMass, Micro Motion Coriolis flow meters		Micro Motion Coriolis flow meters	
	Caldon LEFM and G3, Faure Herman 8400 ultrasonic flow meters		Sick FlowSic 600 and 600XT, Caldon LEFM, Daniel SeniorSonic, FMC MPU, GE GF868, Elster QSonic and QSonic plus, RMG USZ08 ultrasonic flow meters	
	Orifice, Venturi, V-cone and nozzle flow meters. Up to 3 differential pressure inputs per meter. ISO-5167 and AGA-3 flow rate calculation.			
	Smart meter input (analog, HART and Modbus) for flow meters that provide a flow rate or totalizer value			
Inputs and outputs				
	Analog, HART, Modbus and custom process inputs for meter pressure A and B, meter temperature A and B, observed density, density pressure, density temperature, standard density, BS&W and viscosity		Analog, HART, Modbus and custom process inputs for meter pressure A and B, meter temperature A and B, observed density, density pressure, density temperature, base (standard) density, heating value, CO2, N2, H2, specific gravity and relative density	
	Solartron, UGC, Sarasota densitometer time period inputs			
	Anton Paar L-Dens 427 densitometer for HART and Modbus		Solartron specific gravity transducers	
	Dual densitometers for run and station, single for prover		Dual densitometers and SG transducers for run and station	
	ABB 266, Rosemount 4088 multi-variable transmitter		ABB 266, Rosemount 4088 multi-variable transmitter.	
	4 analog outputs, 4 pulse outputs, 4 frequency outputs			
	Auxiliary inputs for pressure, temperature, densitometer and generic (2 each, 8 in total)		Auxiliary inputs for pressure, temperature and generic (2 each, 6 in total)	
Products and fluid property calculations				
	16 products		1 product	
	API 11.1 5/6/23/24 API 11.2.4 (GPATP27) LPG/NGL API 11.3.2.1 ethylene API 11.3.2.2 propylene API 11.4.1 water API 2540 5/6/23/24 ASTM D1550 butadiene ASTM D4311 asphalt Historical 1952 5/6/23/24 IAPWS-IF97 water and steam IUPAC ethylene NIST 1045 ethylene OIML R22 ethanol/alcohol	API 11.1 5/6/23/24/53/54/59/60 API 11.2.4 (GPATP27) LPG/NGL API 11.3.2.1 ethylene API 11.3.2.2 propylene API 2540 5/6/23/24/53/54 ASTM D1550 butadiene ASTM D4311 asphalt Hist. 1952 5/6/23/24/53/54 IAPWS-IF97 water and steam IUPAC ethylene NIST 1045 ethylene OIML R22 ethanol/alcohol	Compressibility AGA-NX19, AGA-8 Gross, AGA-8 Detailed, AGA-8 Part 2 (GERG-2008) At reference conditions GPA 2172, iSO-6976 Heating Value AGA-5, GPA 2172, iSO-6976 Speed of sound AGA-10	Compressibility AGA-NX19, SGERG (ISO 12213-3) AGA-8 Detailed (ISO 12213-2) GERG-2008 (ISO-20765-2) GSSSD-MR113, GOST-30319 At reference conditions iSO-6976, GPA 2172 Heating Value iSO-6976, GPA 2172, AGA-5 Speed of sound AGA-10 Wet gas De Leeuw, Reader Harris
Totalizers and averages				
	Run totalizers for indicated volume / mass, gross volume, mass, GSV, NSV, good pulses, error pulses, run time		Run totalizers for indicated volume/mass, gross volume, mass, base/standard volume, energy, good pulses, error pulses and run time	
	Station totalizers for mass, GSV, NSV, run time		Station totalizers for mass, base/standard volume, energy and run time	
	Hourly, daily and 2 configurable period data for run and station			
	Forward and reverse totalizers and averages for run and station			
	Product specific gross volume totalizers			
	Run and station batch data			
	Maintenance totalizers			

Software applications

Application	Liquid_USC	Liquid_Metric	Gas_USC	Gas_Metric
Meter linearization and proving				
	Meter body correction for pressure and temperature			
	Viscosity correction (helical turbine, PD, ISO-4124)			
	K-Factor nominal value or curve, forward and reverse			
	Forward and reverse product-specific MF nominal values or curves		Forward and reverse MF nominal value or curve	
	Up to 12 points per curve			
	All sphere and compact prover types			
	Two provers (only one active at a time)			
	Up to 4 prove detector inputs			
	30 runs per sequence	10 runs per sequence	10 runs per sequence	
	API 4.8 range repeatability and progressive uncertainty			
	API 13.2 MF control chart			
	Master meter proving with trial mode for meter verification			
	Serial mode to disable master meter totals when lined up for proving / verification			
	MF acceptance on low/high limit, deviation from previous MF and deviation from historical average (10 values)			
	Reprove on flow, density, temperature, pressure and viscosity			
Stream and station capability				
	Single station for up to 8 liquid meter runs		Single station for up to 8 gas meter runs	
	Support for multistream flow computer with station and proving capability			
	Support for single-stream flow computers with remote station / proving flow computer, which can be one of the stream flow computer			
	Remote prover flow computer capability for up to 8 meter runs via a prover bus			
	Up to 30 stream flow computers can share samer prover IO module			
Batching				
	Auto batch end on quantity, schedule, day, month, week, DI, flow			
	Auto product selection on density, valve position, DI, viscosity			
	Auto period end on batch end			
	Optional batch start command			
	Batch stack with 6 batches for run and station			
	Recalculation of last 4 batches for meter run only			
Control functions				
	Run inlet, run outlet, run to prover and prover outlet valve control		Run inlet, run outlet and crossover valve control	
	Prover 4-way control			
	Sampler control for run and station and single, twin and 16 cans.		Sampler control for run and station and for single and twin can	
	PID control for flow and pressure and for run, station and prover		PID control for flow and pressure and for run and station	
	Loading control for LACT and ACT units			
Reports and data archives				
	Meter ticket and station ticket with run values			
	Proving report 10 runs average data and 5 runs average MF method			
	Loading ticket for LACT / ACT units			
	4 period reports (hour, day and 2 configurable) for run and station			
	Master meter report with up to 5 accepted runs			
	Snapshot report for run and station			
	Daily alarm report and daily event report			
	Configuration report			
	Batch archive for run and station			
	Loading archive for run			
	Daily archive for run		Hourly, daily, period A and period B archives for run and station	

Castel Maggiore (BO) 40013
Via Lirone 60/i

e-mail: info@eurotecsrl.com
Tel: +39 051/6321595
Website: www.eurotecsrl.com

C.F.: 04103780377
P.I.: 01596581205

—

ABB B.V.
Measurement & Analytics
Achtseweg Zuid 151A / Strijp-TQ Entrance 5
5651GW Eindhoven
The Netherlands
Phone: +31 40 236 9445
Mail: nl-spiritit-sales@abb.com

ABB Malaysia Sdn Bhd.
Measurement & Analytics
Lot 608, Jalan SS 13/1K
47500 Subang Jaya
Selangor Darul Ehsan, Malaysia
Phone: +60 3 5628 4888

abb.com/midstream

ABB Inc.
Measurement & Analytics
7051 Industrial Boulevard
Bartlesville OK 74006
United States of America
Phone: +1 800 442 3097

ABB Limited
Measurement & Analytics
Oldends Lane, Stonehouse
Gloucestershire, GL10 3TA
United Kingdom
Phone: +44 7730 019 180

We reserve the right to make technical changes or modify the contents of this document without prior notice. With regard to purchase orders, the agreed particulars shall prevail. ABB does not accept any responsibility whatsoever for potential errors or possible lack of information in this document.

We reserve all rights in this document and in the subject matter and illustrations contained therein. Any reproduction, disclosure to third parties or utilization of its contents – in whole or in parts – is forbidden without prior written consent of ABB.

© Copyright 2020 ABB.
All rights reserved.

DS/FlowX-EN Rev. F 03.2020