Data sheet DS/FPD550–EN Rev. C

PitoMaster FPD550
Compact averaging pitot flowmeter

Economical flow metering solutions for gases, liquids and steam



Compact flowmeter with integral transmitter, manifold and temperature element
— for volumetric- or mass-flow metering; available for pipe sizes DN100 to DN600 (4 to 24 in.)
— problems caused by impulse piping eliminated by mounting the transmitter and manifold directly onto the meter
— complete with manifold and ABB DP or Multivariable transmitter

Unique profile shape
— offers high flow turndown

Low permanent pressure loss
— low energy consumption and running costs
— reduced carbon footprint

Dual averaging feature
— gives improved accuracy with asymmetric flow profiles

Factory acceptance report
— supplied with report detailing results of critical inspection checks, plus certification data

EUROTEC
TECNOLOGIE IMPIANTISTICHE - AUTOMAZIONE - TELECONTROLLO

Power and productivity
for a better world™
ABB

PitoMaster FPD550
Compact averaging pitot flowmeter

PitoMaster – compact averaging pitot tube flowmeter

PitoMaster is an averaging pitot tube-based flowmeter designed to greatly simplify specification, installation and commissioning.

PitoMaster is a one-piece flowmeter assembly with the following features:

— Averaging Pitot tube assembly with choice of pipe sizes from DN100 to DN 600 (4 to 24 in.)
— Threaded or flanged pipe connection
— Integral 3-valve instrument manifold (optional 5-valve manifold available)
— Optional integral mineral-insulated temperature element for corrected volume / mass calculations; optional integral temperature transmitter
— Integral DP or multivariable transmitter, factory fitted to manifold
— Fully leak tested

Benefits

PitoMaster avoids many of the difficulties involved in the sizing, selection, procurement, installation and commissioning of conventional DP flowmeter installations.

— With all the major components in one assembly, PitoMaster eliminates the problems of sourcing multiple components. It provides large savings in cost and time due to the simplicity of purchasing, design and installation.
— Integral transmitter and manifold with compact tapping connections eliminates the need to run and connect impulse piping and offers:
  — reduced possibility of impulse line blockage
  — reduced number of potential leakage points
— The assembly is pressure-tested in the factory, ensuring the connections between the tapping points and the transmitter are completely free of leaks.
— The 'Plugged Impulse Line Detection' (PILD) feature generates a warning via HART communication if either or both of the impulse lines become fully or partially obstructed (for example, by foreign material or ice). The meter can also be configured to drive the analog output signal to the 'Alarm current'.



— New 'through-the-glass' (TTG) keypad technology enables configuration without the need to remove thw transmitter covers, even in hazardous areas.
— Factory configuration saves the user time during commissioning and ensures that the flowmeter output span truly matches that of the application flowrate.

Versions

PitoMaster is available in two versions:

PitoMaster V

— a compact averaging pitot tube flowmeter for general purpose measurement of liquids, gases and steam in volumetric units (actual volume). It uses the ABB 266 DSH transmitter and provides a flow rate and total display with an output of 4 to 20 mA proportional to the actual volume flowrate.

PitoMaster V has a stainless steel body and an alloy, 304 stainless steel or 316 stainless steel transmitter case.

PitoMaster M

— a compact averaging pitot tube flowmeter, giving measurement directly in mass- or corrected volume-units for liquids and steam. Gas flow measurement is directly in reduced volume units. It uses the ABB 267CS multivariable transmitter to measure DP, temperature and pressure, providing a flowrate and total display and transmits a 4 to 20 mA signal proportional to the mass or corrected volume flowrate.

PitoMaster M has a stainless steel body, an aluminium alloy transmitter case (optionally stainless steel) and an optional internal temperature element.

DP span limits

For both versions there are 6 DP sensor ranges available. For optimum accuracy refer to Table 1and select the sensor so that the full scale DP is in the shaded area and is as close as possible to the maximum range of the sensor.

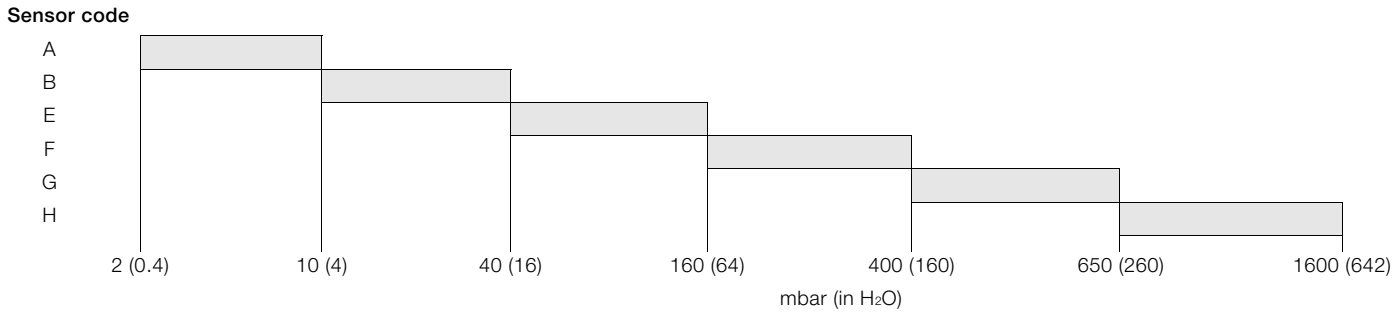

Table 1: PitoMaster V and PitoMaster M – full scale DP application range

PitoMaster FPD550
Compact averaging pitot flowmeter

Specification – general

Fluids
Liquids, gases and saturated steam

Line sizes
100 to 600 mm (4 to 24 in.)

Probe
13 or 25 mm (1/2 or 1 in.) diameter probe with optional end support

Process connection
— Threaded BSPT or NPT
— Flanged DN25 (1 in.) or DN 40 (1 1/2 in.) to ANSI 150RF, 300RF or NP10/16, NP25/40

Construction materials
Probe
316 stainless steel
Manifold
316 stainless steel
Manifold seals
PTFE
Flange
316 stainless steel
Weld adaptor
A105 carbon steel; 316 stainless steel
Process isolating diaphragms
Hastelloy C-276™
(AISI 316 L stainless steel gold plated for Hydrogen service) packing
Process flanges, adapters, plugs and drain / vent valves
AISI 316 L stainless steel

Sensor fill fluid
— Silicone oil
— Inert fill (Halocarbon™ 4.2 or Galden™)

Manifold
Integral 3-valve manifold (optional 5-valve manifold)
Output signal
— Two-wire, 4 to 20 mA, selected for square-root output
— Low flow cut-off facility
— HART® communication provides digital process variable (%, mA or engineering units) superimposed on 4 to 20 mA signal, with protocol based on Bell202 FSK standard
— Optional Profibus PA, Foundation Fieldbus or Modbus communications

Accuracy
Uncalibrated
PitoMaster V:
— ±1.4 % of actual flow

PitoMaster M:
— ±1.15 % of actual flow

Flow range
8:1

Maximum pressure
50 Bar @ 38 °C (725 psi @ 100 ºF)

Maximum process temperature

180 °C (356 °F)

At the transmitter sensor

Silicone oil filled sensor F to H:
— –40 to 121 °C (–40 to 250 °F)

Silicone oil filled sensor A, B, E:
— –25 to 121 °C (–13 to 250 °F)

Inert (Galden) filled sensor F to H:
— –20 to 100 °C (–4 to 212 °F)

Inert (Galden) filled sensor E:
— –10 to 100 °C (14 to 212 °F)

Inert (Halocarbon) filled sensor F to H:
— –20 to 100 °C (–4 to 212 °F)

Inert (Halocarbon) filled sensor E:
— –10 to 100 °C (14 to 212 °F)

IMPORTANT
For hazardous atmosphere applications see the temperature range specified on the certificate / approval relevant to the type of protection

Ambient Temperature Limits

Note. LCD display may not be clearly readable below –20 °C (–4 °F) or above 70 °C (158 °F)

PitoMaster V

V1: Sensors A, B: –25 and 85 °C (–13 and 185 °F)
Other sensors: –40 and 85 °C (–40 and 185 °F)

V2: Sensors A to E incl: –25 and 85 °C (–13 and 185 °F)
Other sensors: –40 and 85 °C (–40 and 185 °F)

PitoMaster M

M1: –40 and 85 °C (–40 and 185 °F)

Storage limits

–50 to 85 °C (–58 to 185 °F)
LCD integral display:
— –40 to 85 °C (–40 to 185 °F)

Integral display

PitoMaster V

— Wide screen LCD, 128 x 64 pixel, 52.5 x 27.2 mm (2.06 x 1.07 in.) dot matrix
— Multi language
— 4 keys for flowmeter configuration and management
— Totalized and instantaneous flow indication
— Display can also indicate diagnostic messages and provides configuration facilities

PitoMaster M

19-segment alphanumeric display (2-line, 6-character) with additional bar chart display. Back illumination optional.

PitoMaster FPD550
Compact averaging pitot flowmeter

Environmental limits

Electromagnetic compatibility (EMC)
Complies with EN 61326 and NAMUR NE-21
Surge immunity level (with surge protector)
4 kV (according to IEC 1000-4-5 EN 61000-4-5)
Pressure equipment directive (PED)
Complies with 97/23/EEC Category III Module H
Humidity
Relative humidity:
— up to 100 %

Condensing, icing:
— admissible

Vibration resistance
Accelerations up to 2 g at frequency up to 1000 Hz (according to IEC 60068-2-6)
Shock resistance
Acceleration:
— 50 g

Duration:
— 11 ms (according to IEC 60068-2-27)

Wet and dust-laden atmospheres
The meter is dust and sand tight and protected against immersion effects as defined by EN 60529 (1989) to IP 67 (IP 68 on request) or by NEMA to 4X or by JIS to C0920. IP65 with Harting Han connector.

Hazardous atmospheres

With or without integral display
Combined ATEX code EW (= E1 + E2 + E3 below)
Combined ATEX and FM Approvals code EN (= E1 + E2 + E3 + E4 + E6 below)
Intrinsic safety:
— ATEX Europe (code E1)
— II 1/2 G Ex ia IIC T6/T5/T4; IP67
— II 1 D Ex iaD 20 T85 °C
— II 1/2 D Ex iaD 21 T85 °C; IP67

Explosion proof:
— ATEX Europe (code E2)
— II 1/2 G Ex d IIC T6
— II 1/2 D Ex tD A21 T85 °C (–50 °C • Ta •+75 °C); IP67

Type 'N':
— ATEX Europe (code E3) type examination
— II 3 G Ex nL IIC T6/T5/T4
— II 3 D Ex tD A22 T85 °C; IP67

FM Approvals US (code E6) and Canada (code E4)
Explosion proof (US):
— Class I, Div. 1, Groups A, B, C, D

Explosion proof (Canada):
— Class I, Div. 1, Groups B, C, D

Dust ignition proof:
— Class II, Div. 1, Groups E, F, G

Suitable for:
— Class II, Div. 2, Groups F, G; Class III, Div.1, 2

Non-incendive:
— Class I, Div. 2, Groups A, B, C, D

Intrinsically safe:
— Class I, II, III, Div. 1, Groups A, B, C, D, E, F,G
— Class I, Zone 0 AEx ia IIC T6/T4, Zone 0 (FM US)
— Class I, Zone 0 Ex ia IIC T6/T4, Zone 0 (FM Canada)

FM Approvals US

Intrinsically safe (code EA):

— Class I; Division 1; Groups A, B, C, D;

— Class I; Zone 0; Group IIC; AEx ia IIC

Explosion proof (code EB):

— Class I, Division 1, Groups A, B, C, D;

— Class II/III, Division 1, Groups E, F, G

Refer to certificates for ambient temperature ranges (within the limits –50 to 85 °C) related to the different temperature classes

CSA Approvals Canada (code EE):

Explosion proof:

— Class I, Division 1, Groups B, C, D;

— Class II/III, Division 1, Groups E, F, G

Weights

Typical product weights in kg (lbs) excluding pipe fittings and end supports

Size mm (in.)	Threaded	Flanged 1½ in. ANSI 150lb	Flanged 1½ in. ANSI 300lb	Flanged DN40 PN10/16	Flanged DN40 PN25
100 (4)	10 (22)	12 (26.5)	13 (28.7)	12 (26.5)	12 (26.5)
150 (6)	10 (22)	12 (26.5)	13 (28.7)	13 (28.7)	13 (28.7)
200 (8)	10 (22)	12 (26.5)	13 (28.7)	13 (28.7)	13 (28.7)
250 (10)	11 (24.3)	12 (26.5)	14 (30.9)	13 (28.7)	13 (28.7)
300 (12)	11 (24.3)	12 (26.5)	14 (30.9)	13 (28.7)	13 (28.7)
350 (14)	11 (24.3)	12 (26.5)	14 (30.9)	13 (28.7)	13 (28.7)
400 (16)	11 (24.3)	12 (26.5)	14 (30.9)	13 (28.7)	13 (28.7)
450 (18)	11 (24.3)	13 (28.7)	14 (30.9)	13 (28.7)	13 (28.7)
500 (20)	11 (24.3)	13 (28.7)	14 (30.9)	13 (28.7)	13 (28.7)
600 (24)	11 (24.3)	13 (28.7)	14 (30.9)	13 (28.7)	13 (28.7)

Weight adders:

5 valve manifold +1 kg (2.2 lbs)

PitoMaster V design level 2 (SS) +2 kg (4.4 lbs)

PitoMaster M design level 1 (SS) +1 kg (2.2 lbs)

DP span

Sensor code	Upper range limit (URL)	Minimum span
A	1 kPa	0.05 kPa
	10 mbar	0.5 mbar
	4 in. H_2O	0.2 in. H_2O
B	4 kPa	0.2 kPa
	40 mbar	1.4 mbar
	16 in. H_2O	0.56 in. H_2O
E	16 kPa	0.54 kPa
	160 mbar	1.6 mbar
	64 in. H_2O	0.65 in. H_2O
F	40 kPa	0.4 kPa
	400 mbar	4 mbar
	160 in. H_2O	1.6 in. H_2O
G	65 kPa	0.65 kPa
	650 mbar	6.5 mbar
	260 in.H_2O	2.6 in. H_2O
H	160 kPa	1.6 kPa
	1600 mbar	16 mbar
	642 in. H_2O	6.4 in. H_2O

PitoMaster FPD550
Compact averaging pitot flowmeter

Dimensions – PitoMaster V

Design level 1 – threaded process connection

Dimensions in mm (in.)

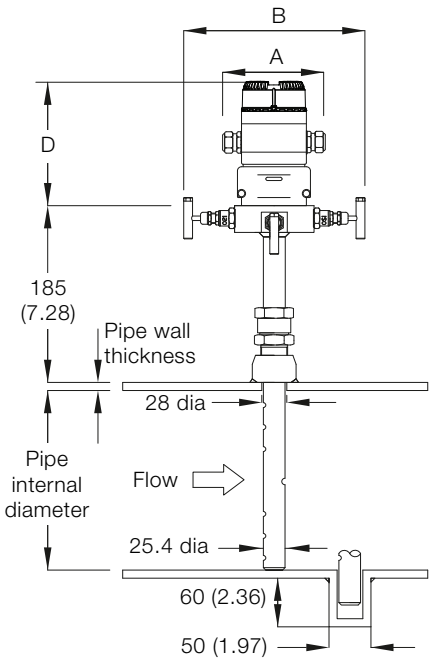

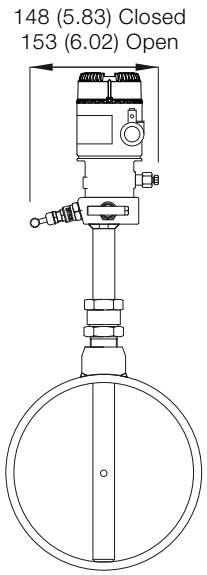

A	154 (6.06) over glands	
B	3-valve	202 (7.95) closed
		212 (8.35) open
	5-valve	252 (9.92) closed
		269 (10.59) open
D	153 (6.0) with display	
	124 (4.9) without display	

Design level 2 – threaded process connection

Dimensions in mm (in.)

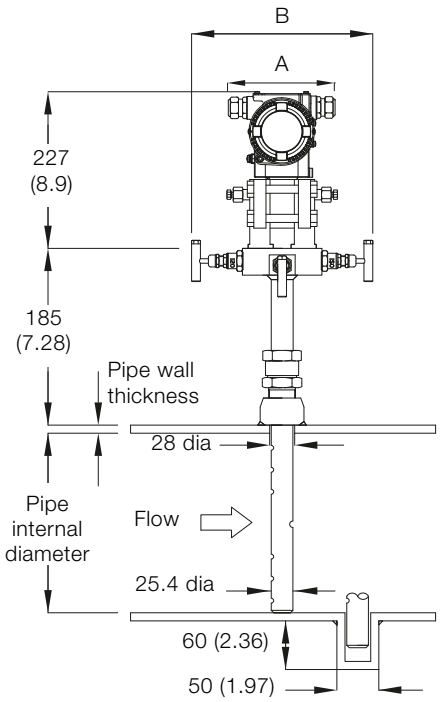

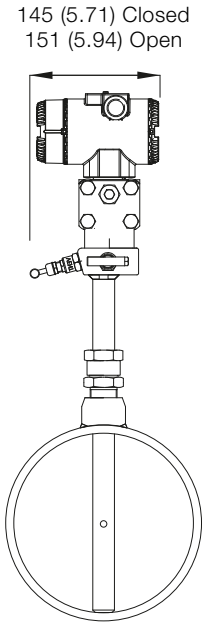

A	154 (6.06) over glands	
B	3-valve	202 (7.95) closed 212 (8.35) open
	5-valve	252 (9.92) closed 269 (10.59) open

PitoMaster FPD550
Compact averaging pitot flowmeter

Design level 1 – flanged process connection

Dimensions in mm (in.)

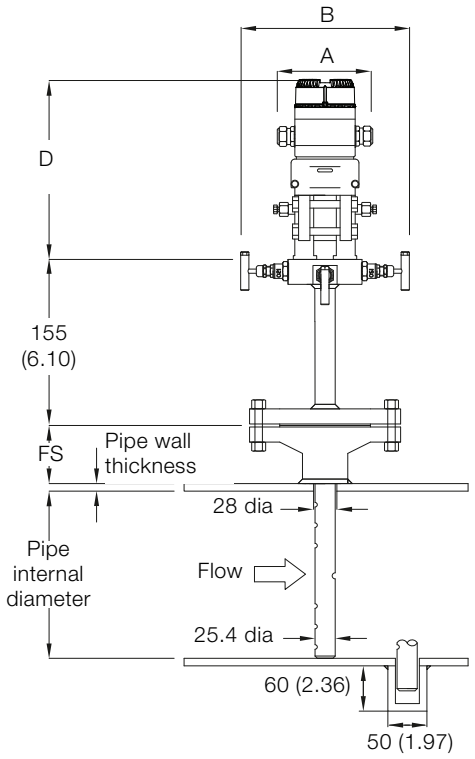

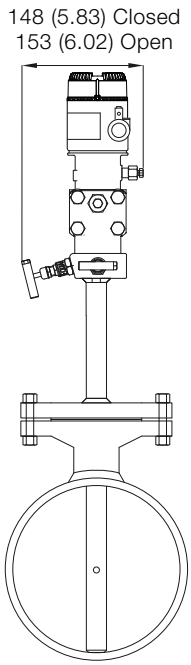

A	154 (6.06) over glands	
B	3-valve	202 (7.95) closed 212 (8.35) open
	5-valve	252 (9.92) closed 269 (10.59) open
D	153 (6.0) with display 124 (4.9) without display	

Flange Rating	150 lb	300 lb	PN10 PN16	PN25
FS	95 (3.74)	100 (3.94)	78 (3.07)	78 (3.07)

Design level 2 – flanged process connection

Dimensions in mm (in.)

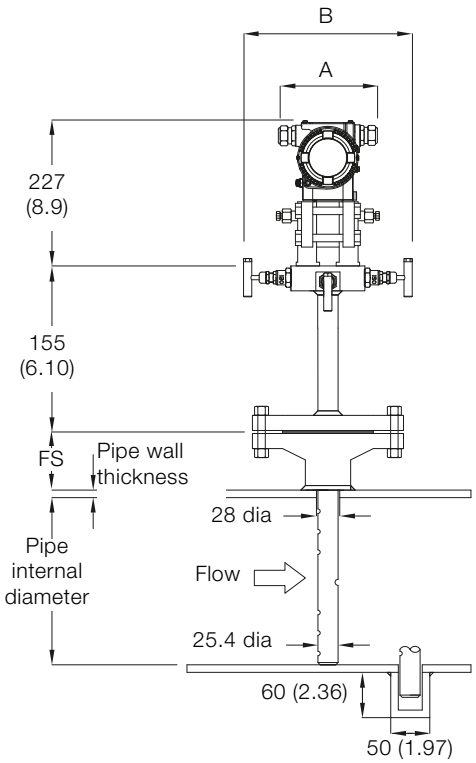

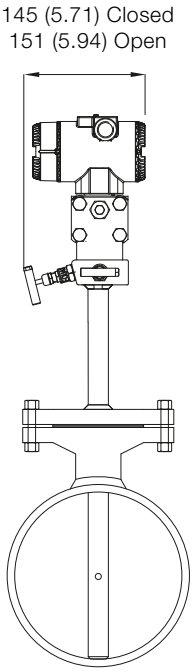

A	154 (6.06) over glands	
B	3-valve	202 (7.95) closed 212 (8.35) open
	5-valve	252 (9.92) closed 269 (10.59) open

Flange Rating	150 lb	300 lb	PN10 PN16	PN25
FS	95 (3.74)	100 (3.94)	78 (3.07)	78 (3.07)

PitoMaster FPD550
Compact averaging pitot flowmeter

Dimensions – PitoMaster M

Design level 1 – threaded process connection

Dimensions in mm (in.)

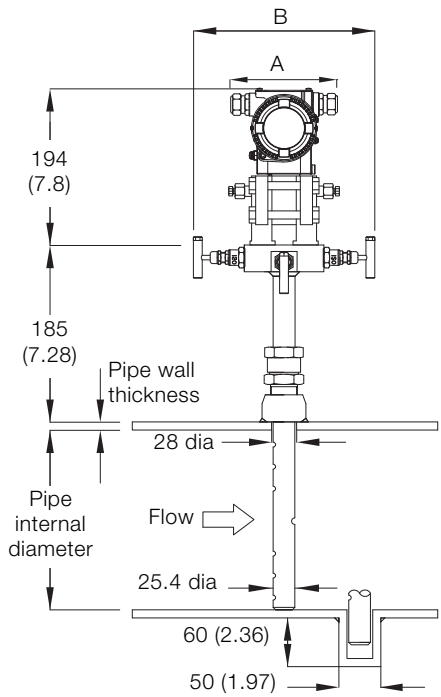

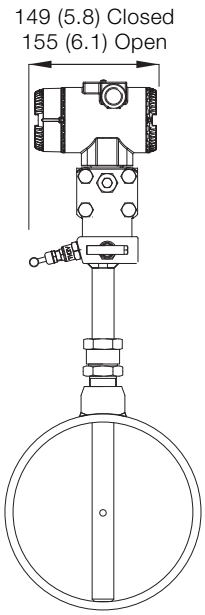

A	154 (6.06) over glands	
B	3-valve	202 (7.95) closed 212 (8.35) open
	5-valve	252 (9.92) closed 269 (10.59) open

Design level 1 – threaded process connection and integral temperature measurement

Dimensions in mm (in.)

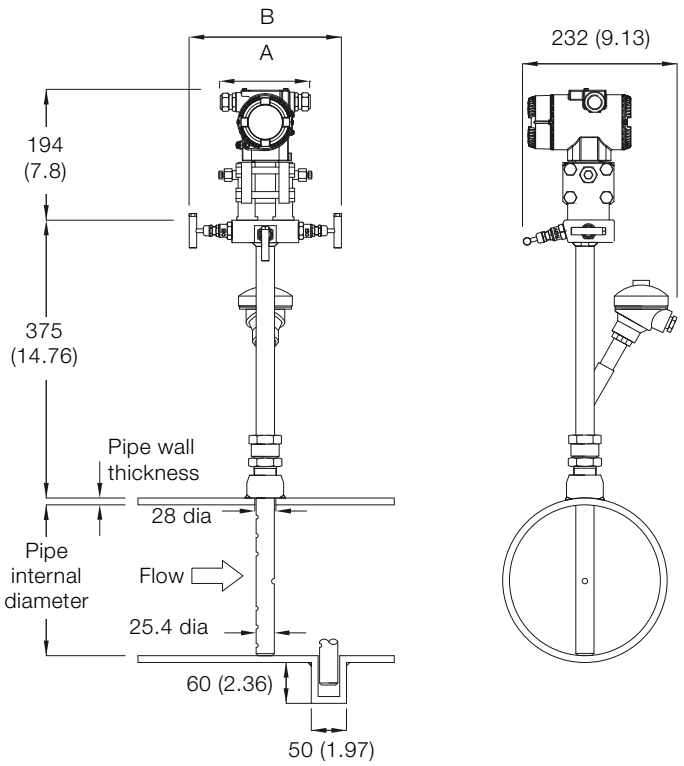

A	154 (6.06) over glands	
B	3-valve	202 (7.95) closed
		212 (8.35) open
	5-valve	252 (9.92) closed
		269 (10.59) open

PitoMaster FPD550
Compact averaging pitot flowmeter

Design level 1 – flanged process connection

Dimensions in mm (in.)

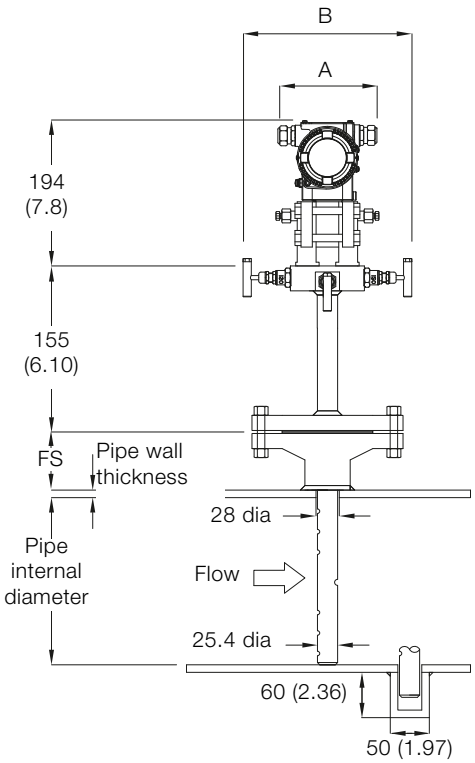

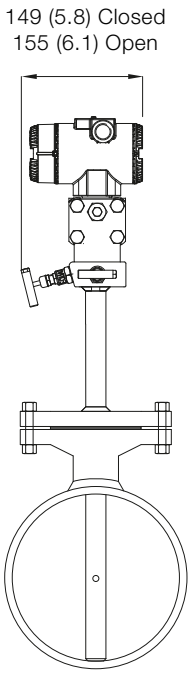

A	154 (6.06) over glands	
B	3-valve	202 (7.95) closed 212 (8.35) open
	5-valve	252 (9.92) closed 269 (10.59) open

Flange Rating	150 lb	300 lb	PN10 PN16	PN25
FS	95 (3.74)	100 (3.94)	78 (3.07)	78 (3.07)

Design level 1 – flanged process connection and integral temperature measurement

Dimensions in mm (in.)

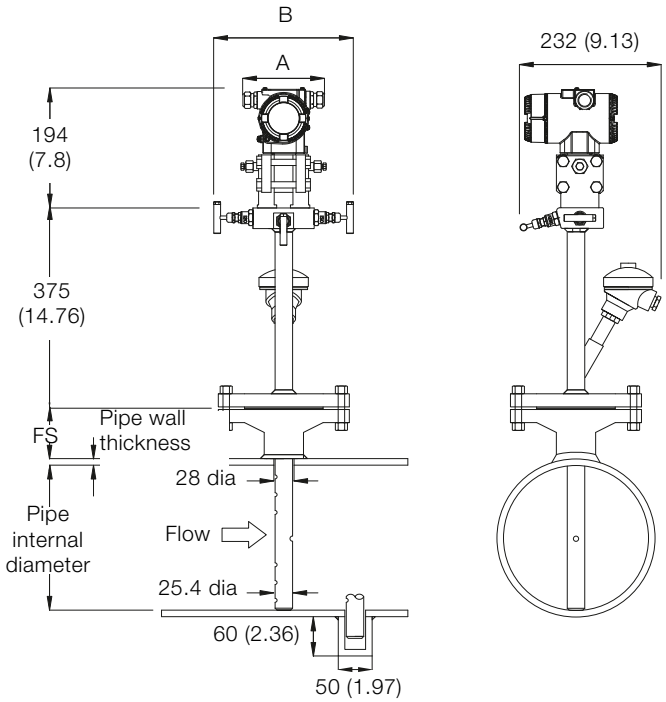

A	154 (6.06) over glands	
B	3-valve	202 (7.95) closed 212 (8.35) open
	5-valve	252 (9.92) closed 269 (10.59) open

Flange Rating	150 lb	300 lb	PN10 PN16	PN25
FS	95 (3.74)	100 (3.94)	78 (3.07)	78 (3.07)

PitoMaster FPD550
Compact averaging pitot flowmeter

Ordering information

			Main code											Optional code
PitoMaster compact averaging pitot flowmeter		**FPD550**	XX	XXX	X	XX	XX	XX	X	X	X	X	X	XX	XX XX XX XX XX
Model and design level															
PitoMaster V, for volume flow, design level 1 (364DS)			V1												
PitoMaster V, for volume flow, design level 2 (266DSH)			V2												
PitoMaster M, for mass flow, design level 1 (267CS)			M1												
Meter size (nominal inside diameter) specify actual id within range…															
100 mm (4 in.)	88 … 111 mm (3.5 … 4.4 in.)			100											
125 mm (5 in.)	112 … 137 mm (4.4 … 5.4 in.)			125											
150 mm (6 in.)	138 … 174 mm (5.4 … 6.9 in.)			150											
200 mm (8 in.)	175 … 224 mm (6.9 … 8.8 in.)			200											
250 mm (10 in.)	225 … 274 mm (5.4 … 6.9 in.)			250											
300 mm (12 in.)	275 … 324 mm (3.5 … 4.5 in.)			300											
350 mm (14 in.)	325 … 374 mm (4.5 … 5.5 in.)			350											
400 mm (16 in.)	375 … 424 mm (5.5 … 6.9 in.)			400											
450 mm (18 in.)	425 … 474 mm (5.4 … 6.9 in.)			450											
500 mm (20 in.)	475 … 549 mm (18.5 … 21.5 in.)			500											
600 mm (24 in.)	550 … 674 mm (21.5 … 26.5 in.)			600											
Fluid															
Liquid					L										
Gas					G										
Steam					S										
Fitting material															
A105 CS pipe fitting						C1									
316L SS fitting						S6									
Process connection type															
Threaded, 1 in. BSPT process connection with weld fitting							B3								
Threaded, 1 in. BSPT process connection with weld fitting and weld cup end support							B4								
Threaded, 1 in. NPT process connection with weld fitting							N3								
Threaded, 1 in. NPT process connection with weld fitting and weld cup end support							N4								
Flanged RF process connection DN 40 (1 1/2 in.), with flanged stand-off, nuts, bolts and gaskets							F3								
Flanged RF process connection DN 40 (1 1/2 in.), with flanged stand-off, nuts, bolts, gaskets and weld cup end support							F4								

See page 19

Continued on next page …

PitoMaster compact averaging pitot flowmeter — Main code: FPD550 XX XXX X XX XX XX X X X X X X XX — Optional code: XX XX XX XX XX

See page 16

Pressure rating

Threaded connection	Y0
ASME CL 150	A1
ASME CL 300	A3
PN 10 / 16	D1
PN 25 / 40	D3

Pipeline orientation

Horizontal	H
Vertical	V

Manifold

Integral 3-valve manifold	3
Integral 5-valve manifold	5

DP span limits

0.05 … 1 kPa / 0.5 … 10 mbar / 0.2 … 4 in. H_2O	A
0.14 … 4 kPa / 1.4 … 40 mbar / 0.56 … 16 in. H_2O	B
0.2 … 6 kPa / 2 … 60 mbar / 0.8 … 24 in. H_2O	C
16 kPa / 160 mbar / 64 in. H_2O max.	E
0.4 … 40 kPa / 4 … 400 mbar / 1.6 … 160 in. H_2O	F
0.65 … 65 kPa / 6.5 … 650 mbar / 2.6 … 260 in. H_2O	G
1.6 … 160 kPa / 16 … 1600 mbar / 6.4 … 642 in. H_2O	H
2.5 … 250 kPa / 25 … 2500 mbar / 10 … 1000 in. H_2O	L

Continued on next page …

PitoMaster FPD550
Compact averaging pitot flowmeter

PitoMaster compact averaging pitot flowmeter	Main code												Optional code				
	FPD550	XX	XXX	X	XX	XX	XX	X	X	X	X	X	XX	XX	XX	XX	XX	XX
			See page 16				See page 17							See next page …				
Transmitter seal material																		
Without seal										0								
Viton										3								
PTFE										4								
EPDM										5								
Perbunan										6								
Electronic housing material / electrical connection																		
Aluminium alloy / ½-14 NPT											A							
Aluminium alloy / M20 x 1.5											B							
AISI 304L SST / ½-14 NPT											H							
AISI 304L SST / M20 x 1.5											L							
AISI 316L SST / ½-14 NPT											S							
AISI 316L SST / M20 x 1.5											T							
Integrated digital display (LCD)																		
None (blind)												0						
LCD display												1						
LCD display (backlit)												2						
TTG (through-the-glass) controlled digital LCD display												5						
Output signal																		
HART digital communications and 4 … 20 mA													H1					
HART digital communications and 4 … 20 mA, SIL2 and SIL3 certified to IEC 61508													H2					
PROFIBUS PA													P1					
FOUNDATION Fieldbus													F1					
MODBUS RS 485													M1					
Wireless HART													W1					

PitoMaster compact averaging pitot flowmeter

	Main code													Optional code				
	FPD550	XX	XXX	X	XX	XX	XX	X	X	X	X	X	X	XX	XX	XX	XX	XX	XX
		See page 16			See page 17					See page 18									
Temperature element																			
Integral															AT				
Remote (element not included)															AR				
Certificates																			
Material monitoring with inspection certificate 3.1 acc. EN 10204																C2			
Dye penetrant NDE of welds																C9			
Hydrostatic pressure test certificate																CB			
Material monitoring NACE MR 01-75 with inspection certificate 3.1 acc. EN 10204																CN			
PED certificate (Pressure Equipment Directive 97 / 23 / EC)																CP			
Explosion protection certification																			
Factory mutual (FM) – intrinsically safe																	EA		
Factory mutual (FM) – explosion proof																	EB		
Canadian standard association (CSA) – explosion proof																	EE		
ATEX + FM + CSA																	EN		
ATEX II 1/2 GD EEx ia + ATEX II 1/2 GD EEx d + ATEX EEx nL																	EW		
Documentation language																			
German																		M1	
Italian																		M2	
Spanish																		M3	
French																		M4	
Chinese																		M6	
Special applications																			
Degreased (oil- and grease-free) with inert capsule filling for oxygen applications																			P1
Gold-plated diaphragm (silicone oil-filled) for hydrogen applications																			P2

Contact us

ABB Limited
Process Automation
Salterbeck Trading Estate
Workington, Cumbria
CA14 5DS
UK
Tel: +44 (0)1946 830 611
Fax: +44 (0)1946 832 661

ABB Inc.
Process Automation
125 E. County Line Road
Warminster
PA 18974
USA
Tel: +1 215 674 6000
Fax: +1 215 674 7183

www.abb.com

Note
We reserve the right to make technical changes or modify the contents of this document without prior notice. With regard to purchase orders, the agreed particulars shall prevail. ABB does not accept any responsibility whatsoever for potential errors or possible lack of information in this document.

We reserve all rights in this document and in the subject matter and illustrations contained therein. Any reproduction, disclosure to third parties or utilization of its contents in whole or in parts – is forbidden without prior written consent of ABB.

Copyright© 2013 ABB

All rights reserved

3KXF511551R1001

DS/FPD550-EN Rev. C 12.2013

Power and productivity
for a better world™