Data sheet DS/FPD500–EN Rev. H

OriMaster FPD500
Compact orifice flowmeter

Measurement made easy

Orifice-based flow metering made simple



Integrated DP flow measurement system, pressure tested as an assembly
— combines primary element with DP transmitter in a single flowmeter assembly

Mass flow version with optional, integral temperature element
— integral multivariable transmitter and RTD for direct reading of mass (liquids and steam) and corrected volume (gas) flowrates in a single unit

Plugged impulse line detection
— detects partial or complete blockage of DP connections
— provides warnings visually and via outputs

Integral impulse connections
— no impulse piping installation required
— provides repeatable DP connection across installation locations

Reduced installation costs
— only one piece to install
— eliminates need to supply and connect separate manifold, transmitter and impulse piping

Easy to specify and maintain
— single ordering code covers complete flowmeter
— only two orifice ratios for simple specification process
— optional replaceable orifice plates offer easy, economic maintenance and flexibility for changing process conditions

New 'through-the-glass' (TTG) keypad technology
— enables quick and easy local configuration without the need to open the cover – even in hazardous areas

Factory acceptance report
— supplied with report detailing results of critical inspection checks, plus certification data

EUROTEC
TECNOLOGIE IMPIANTISTICHE - AUTOMAZIONE - TELECONTROLLO

Power and productivity for a better world™
ABB

OriMaster FPD500
Compact orifice flowmeter

OriMaster – the one-piece DP flowmeter

OriMaster is a stand-alone orifice-based flowmeter with a difference – its advanced design greatly simplifies installation and commissioning.

OriMaster incorporates the following features:

- A wafer-bodied orifice carrier assembly with integral square-edged, concentric plate and corner tapping points
- Integral 3-valve manifold (optional 5-valve manifold available)
- Integral direct connections between the carrier tappings and manifold
- DP transmitter, factory-mounted onto the manifold and pre-configured for the application
- Fully leak-tested and configured

Benefits

OriMaster avoids many of the difficulties involved in the sizing, selection, procurement, installation and commissioning of conventional orifice plate installations.

- With all the major components in one assembly, OriMaster eliminates the problems of sourcing multiple components. Provides large savings in cost and time due to the simplicity of design and installation.
- Integral transmitter and manifold with compact tapping connections eliminates the need to run and connect impulse piping and offers:
  - guaranteed accuracy of positioning and installation of the tapping points
  - reduced possibility of impulse line blockage
- The assembly is pressure-tested in the factory, giving the user confidence that the connections between the tapping points and the transmitter are completely free of leaks
- Factory configuration of the meter saves the user time during commissioning and ensures that the flowmeter output span truly matches that of the application flowrate
- Choice of two discrete Beta ratio values, together with the free sizing, selection and coding software, simplifies the sizing and selection process
- Optional design with replaceable orifice plates enables low-cost repair or, when process conditions change, re-ranging of the meter
- Element centralizing system ensures every meter is concentric with its pipe, thus avoiding significant additional metering errors
- New 'through-the-glass' (TTG) keypad technology enables meter configuration without terminals and with no need to remove the transmitter covers

Basic principle of operation

DP devices work on a principle based upon the Law of Conservation of Energy, where a restriction in the fluid path causes an acceleration in the fluid velocity with a corresponding increase in kinetic energy. The gain in kinetic energy is at the expense of pressure energy, resulting in a drop in fluid pressure across the narrowest part of the restriction. The drop in pressure and the flow rate are linked by the following (simplified) relationship:

$$Q = k \sqrt{DP}$$

where Q = fluid flow rate

k = a constant for that DP device

DP = the pressure difference across the restriction

The DP generated for a given class of device depends on the bore of the restriction. Many calculation standards exist but in all cases the differential pressure produced by the restriction is larger than would normally be expected. This effect occurs because a stream is unable to follow the contours of a restriction perfectly, resulting in a flow stream whose narrowest diameter (known as the Vena Contracta) is less than the diameter of the restriction.

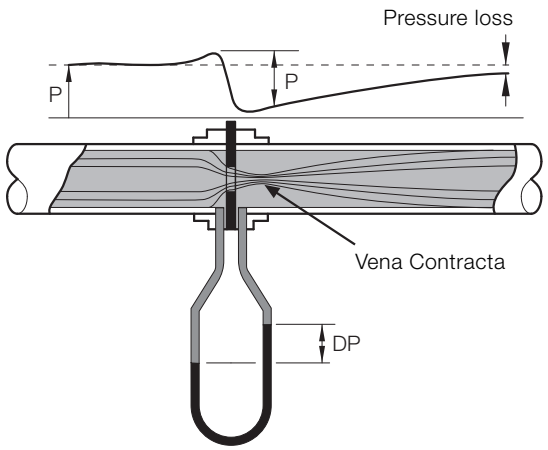

Fig. 1: DP and Vena Contracta

The Vena Contracta increases the velocity (and therefore the kinetic energy) and this produces a larger drop in pressure than would normally be expected. Some of the differential pressure generated is recovered downstream of the meter but all DP devices incur some loss, known as the 'irrecoverable pressure loss'; this is usually expressed as a percentage of the differential pressure.
To correct for the Vena Contracta effect, each device has a Discharge Coefficient; a multiplying factor of less than 1 that is part of the calculation. Typically, the smaller the Vena Contracta compared with the bore of the device, the larger the deviation from expectations and hence the smaller the coefficient.

OriMaster FPD500
Compact orifice flowmeter

Versions

OriMaster is available in two versions:
OriMaster V – a compact flowmeter for general purpose measurement in volumetric units (actual volume). OriMaster V uses the ABB 364 or 266 DP transmitter to provide a flow rate and total display and a 4 to 20 mA output proportional to the actual volume flowrate. The transmitter case and meter body are all in stainless steel as standard when the 364 transmitter is fitted. 316 stainless steel transmitter cases are also available.

There are 5 DP sensor ranges available. For optimum accuracy select the sensor so that the full scale DP is in the shaded area and as close as possible to the maximum range of the sensor – see Table 1.

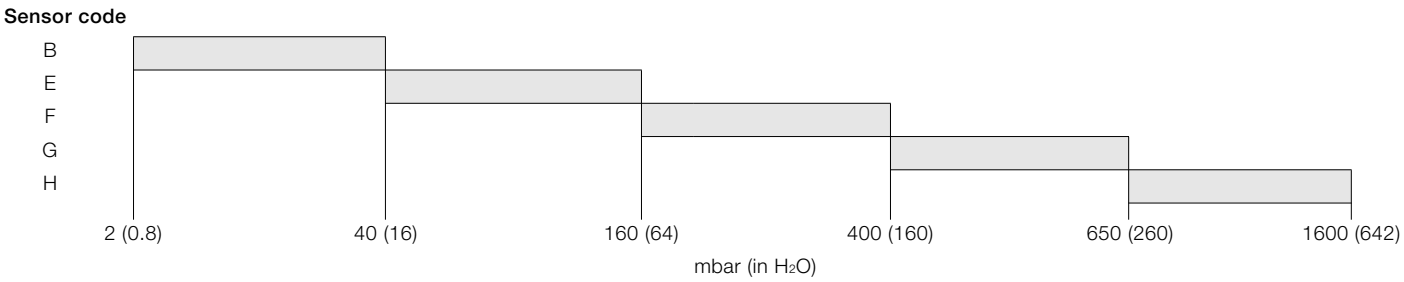

Table 1: OriMaster V full scale DP application range



Fig. 2: OriMaster V – volumetric flowmeter with 364 transmitter

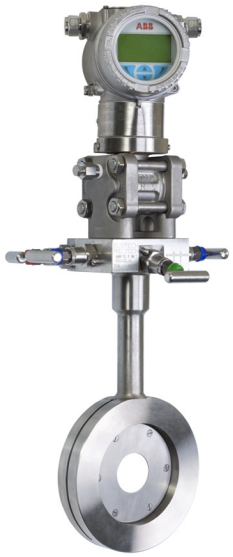

Fig. 3: OriMaster V – volumetric flowmeter with removable orifice plate and 266 transmitter

OriMaster M – a compact flowmeter, providing measurement directly in mass units for liquids and steam. Gas flow is measured directly in reduced volume units. OriMaster M uses the ABB 267 multivariable transmitter to measure DP, temperature and pressure, providing a flowrate display and a 4 to 20 mA output proportional to the mass or corrected volume flowrate. The body is stainless steel and the case is alloy (stainless steel optional). An optional internal temperature element is available.

There are 3 DP sensor ranges available. For optimum accuracy select the sensor so that the full scale DP is in the shaded area and as close as possible to the maximum range of the sensor – see Table 2.

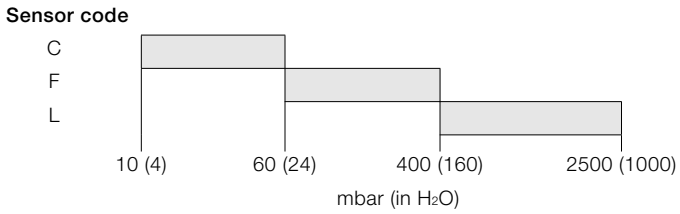

Table 2: OriMaster M full scale DP application range



Fig. 4: OriMaster M – mass-flowmeter

OriMaster FPD500
Compact orifice flowmeter

Specification – general

Fluids
Liquids, gases and saturated steam

Line sizes
25, 40, 50, 80, 100, 150, 200, 250 and 300 mm
(1, 1½, 2, 3, 4, 6, 8, 10 and 12 in.)

Output signal
— Two-wire, 4 to 20 mA, selected for square-root output
— Low flow cut-off facility
— HART® communication provides digital process variable (%, mA or engineering units) superimposed on 4 to 20 mA signal, with protocol based on Bell202 FSK standard
— Optional Profibus PA, Foundation Fieldbus or Modbus communications (OriMaster M only)

Output current limits (to NAMUR standard)
Overload condition
Lower limit:
— 3.8 mA (configurable from 3.7 to 4 mA)

Upper limit:
— 20.5 mA (configurable from 20 to 22.5 mA)

Alarm current
Minimum alarm current:
— 3.8 mA (configurable from 3.7 to 4 mA)

Maximum alarm current:
— 22 mA (configurable from 20 to 22.5 mA)

Standard setting:
— maximum alarm current

Power supply
— The meter operates from 10.5 to 45 V DC with no load and is protected against reverse polarity connection (additional load allows operations over 45 V DC)
— For EEx ia and other intrinsically safe approvals, the power supply must not exceed 30 V DC. Minimum operating voltage is 14 V DC with backlit display

Load limitations

— $R\,(k) = \frac{\text{Supply voltage} - \text{min. operating voltage (V DC)}}{22.5}$

— A minimum of 250 is required for HART communication

Optional indicators
OriMaster V integral display
— Wide-screen LCD, 128 x 64 pixel, 52.5 x 27.2 mm (2.06 x 1.07 in.) dot matrix
— 4 keys for device configuration and management.
— Easy setup for quick commissioning
— Totalized and instantaneous flow indication
— Display also indicates in/out transfer function, static pressure, sensor temperature and diagnostic messages and provides configuration facilities

OriMaster M integral display
2-line, 6-character, 19-segment alphanumeric display with additional bar-chart display. Back illumination optional. User-specific display, percentage of the output current, output current in mA or process variable. Diagnostic messages, alarms, measuring range infringements and changes in the configuration are also displayed.

Wetted materials

Orifice assembly, stem and manifold

316L stainless steel

Transmitter sensor housing

OriMaster V:

— Aluminum alloy (266DSH transmitter)
(316L stainless steel optional)
— 304L stainless steel (364DS transmitter)
(316L stainless steel optional)

OriMaster M:

— Aluminum alloy
(316L stainless steel optional)

Process isolating diaphragms

Hastelloy C276 (NACE)

Seals

Transmitter to manifold:

— PTFE

Manifold:

— Graphite, PTFE

Process connections

Wafer body to fit between the following flange drillings

— ASME B16.5 (ANSI) Class 150, 300 or 600
— DIN PN16, PN25, PN40 or PN100

Pipeline centralization assured by centralizing tool(s) supplied with every unit as standard

Pressure limitations

100 bar (1450 psi) or as flange rating, whichever is the lower

Temperature limitations

Process

— –20 to 121 °C (–4 to 250 °F)
— –20 to 230 °C (–4 to 446 °F) for steam applications

Ambient

–20 to 70 °C (–4 to 158 °F)

Note. LCD display may not be clearly readable below –20 °C (–4 °F) or above 70 °C (158 °F)

M1, M3	–40 and 85 °C (–40 and 185 °F)
V1, V3:	Sensors A, B: –25 and 85 °C (–13 and 185 °F) Other sensors: –40 and 85 °C (–40 and 185 °F)
V2, V4	Sensors A to E incl: –25 and 85 °C (–13 and 185 °F) Other sensors: –40 and 85 °C (–40 and 185 °F)

OriMaster FPD500
Compact orifice flowmeter

Orifice plate bore at 20 °C (68 °F):

For Beta = 0.4

— 25 mm (1 in.)	10.66 mm (0.42 in.)
— 40 mm (1½ in.)	16.36 mm (0.644 in.)
— 50 mm (2 in.)	20.99 mm (0.826 in.)
— 80 mm (3 in.)	31.17 mm (1.227 in.)
— 100 mm (4 in.)	40.90 mm (1.610 in.)
— 150 mm (6 in.)	61.63 mm (2.426 in.)
— 200 mm (8 in.)	81.10 mm (3.193 in.)
— 250 mm (10 in.)	101.8 mm (4.008 in.)
— 300 mm (12 in.)	121.29 mm (4.775 in.)

For Beta = 0.65

— 25 mm (1 in.)	17.32 mm (0.682 in.)
— 40 mm (1½ in.)	26.58 mm (1.047 in.)
— 50 mm (2 in.)	34.11 mm (1.343 in.)
— 80 mm (3 in.)	50.65 mm (1.994 in.)
— 100 mm (4 in.)	66.47 mm (2.617 in.)
— 150 mm (6 in.)	100.15 mm (3.942 in.)
— 200 mm (8 in.)	131.78mm (5.188 in.)
— 250 mm (10 in.)	165.43 mm (4.01 in.)
— 300 mm (12 in.)	197.1 mm (7.76 in.)

Weight in kg (lb) (approximately)

Size	Typical Weight
25 mm (1 in.)	9.5 (21)
40 mm (1½ in.)	10 (22)
50 mm (2 in.)	10.5 (23)
80 mm (3 in.)	11.5 (25.3)
100 mm (4 in.)	12 (26.5)
150 mm (6 in.)	14 (31)
200 mm (8 in.)	16 (35.3)
250 mm (10 in.)	19 (42)
300 mm (12 in.)	21.5 (47.4)

Upstream straight pipe requirements to ISO 5167:2003

Fitting	β = 0.4	β = 0.65
Conical reducer (2D – D)	5D	12D
Conical expander (0.5D – D)	12D	28D
Single 90 ° bend	16D	44D
2 off 90 ° bends in same plane	10D	44D
2 off 90 ° bends in different plane	50D	60D

Where D = pipe diameter

Vibration limits to IEC60068-2-6

Maximum pipe vibration level

<0.5g over frequency range 10 to 500 Hz

Performance

System accuracy at reference conditions (for Re >10^5)

Uncalibrated

		% Vol. flow rate		% Mass flow rate	
		Size in mm (in.)			
Model	Beta	25 to 40 (1 to 1 1/2)	50 to 200 (2 to 8)	25 to 40 (1 to 1 1/2)	50 to 200 (2 to 8)
OriMaster V	0.4	2	1.5		
	0.65 *	1.5	1.5		
OriMaster M	0.4			2	1.5
	0.65 *			2	1.5

* For a combination of Re <10^5 and Beta = 0.65, add 0.5 %

Calibrated

ABB standard water calibration (3 points over a 5:1 flow range)
System accuracy:
— ± 1 % of flowrate

Repeatability

OriMaster V:
— 0.1 %

OriMaster M:
— 0.1 %

Turndown

OriMaster V:
— up to 8:1

OriMaster M:
— up to 8:1

Specification – OriMaster V

DP span

Sensor code	Upper range limit (URL)	Minimum span
B	4 kPa	0.2 kPa
	40 mbar	1.4 mbar
	16 in. H_2O	0.56 in. H_2O
E	16 kPa	0.54 kPa
	160 mbar	1.6 mbar
	64 in. H_2O	0.65 in. H_2O
F (266DSH only)	40 kPa	0.4 kPa
	400 mbar	4 mbar
	160 in. H_2O	1.6 in. H_2O
G	65 kPa	0.65 kPa
	650 mbar	6.5 mbar
	260 in.H_2O	2.6 in. H_2O
H	160 kPa	1.6 kPa
	1600 mbar	16 mbar
	642 in. H_2O	6.4 in. H_2O
L (364DS only)	250 kPa	2.5 kPa
	2500 mbar	25 mbar
	1000 in. H_2O	10 in. H_2O

Temperature limits

Ambient

Lower limit:
— –40 °C (–40 °F)
— –20 °C (–4 °F) for LCD indicator

Upper limit:
— 85 °C (185 °F)
— 70 °C (158 °F) for LCD indicator

Note. For Hazardous Atmosphere applications refer to the temperature range specified on the certificate / approval relevant to the required type of protection.

Process

Lower limit:
— –40 °C (–40 °F)

Upper limit:
— 121 °C (250 °F) at the transmitter
— 230 °C (446 °F) at the process

Storage

Lower limit:
— –50 °C (–58 °F)
— –40 °C (–40 °F) for LCD indicator

Upper limit:
— 85 °C (185 °F)

Hazardous atmospheres

With or without integral display – combined ATEX, FM and CSA

ATEX approval

Intrinsic safety (Category 1)

— II 1 GD T50 °C, EEx ia IIC T6
(–50 °C ≤ Ta ≤ 40 °C) respectively
— II 1 GD T95 °C, EEx ia IIC T4
(–50 °C ≤ Ta ≤ 85 °C) or
— II 1/2 GD T50 °C, EEx ia IIC T6
(–50 °C ≤ Ta ≤ 40 °C) respectively
— II 1/2 GD T95 °C, EEx ia IIC T4
(–50 °C ≤ Ta ≤ 85 °C)

Explosion proof (Category2)

— II 1/2 GD T50 °C, EEx d IIC T6 IP67 T85 °C
(–50 °C ≤ Ta ≤ 75°C)

Canadian Standards Association (CSA) and Factory Mutual (FM)

Explosion proof:
— Class I, Div. 1, Groups A, B, C, D

Dust ignition proof:
— Class II, Div. 1, Groups E, F, G

Suitable for:
— Class II, Div. 2, Groups F, G; Class III, Div. 1, 2

Non-incendive:
— Class I, Div. 2, Groups A, B, C, D

Intrinsically safe:
— Class I, II, III, Div. 1, Groups A, B, C, D, E, F, G AEx ia IIC T6/T4, Zone 0 (FM)

Specification – OriMaster M

Range and span limits

Sensor code	Upper range limit (URL)	Minimum span
C	6 kPa	0.2 kPa
	60 mbar	2 mbar
	24 in. H_2O	0.8 in. H_2O
F	40 kPa	0.4 kPa
	400 mbar	4 mbar
	160 in. H_2O	1.6 in. H_2O
L	250 kPa	2.5 kPa
	2500 mbar	25 mbar
	1000 in. H_2O	10 in. H_2O

Temperature limits

Ambient

Silicone oil filling:
— –40 to 85 °C (–40 to 185 °F)

LCD display:
— –20 to 70 °C (–4 to 158 °F)

Lower ambient limit for Viton and PTFE gaskets: –20 °C (–4 °F)

Note. For Hazardous Atmosphere applications refer to the temperature range specified on the certificate / approval relevant to the required type of protection

Process

Lower limit:
— refer to lower ambient limits

Upper limit (silicone oil):
— 121 °C (250 °F) for working pressure above 10 kPa abs., 100 mbar abs., 1.45 psia

Storage

Lower limit:
85°C (185 °F)
Upper limit:
— –50 °C (–58 °F)
— –40 °C (–40 °F) for LCD indicator

Temperature element

Integral

— 100 Ω Platinum RTD, cabled directly to the transmitter

Remote (where supplied by ABB):
Element:
— 100 Ω Platinum RTD

Cable:
— 4-core screened, PTFE

Thermowell:
— 3/4 in. NPT screwed pocket in 316L stainless steel

Hazardous Atmospheres – ATEX according to Directive 94/9/EC – ordering code EW (see page 22)

Transmitter of protection type 'Intrinsically safe EEx ia', 'Flameproof enclosure EEx d', Limited energy equipment EEx nL'

Transmitter with 4 to 20 mA output signal and HART communication

Identification:
— II 1/2 GD T50 °C EEx ia IIC T6

OR
Identification:
— II 1/2 GD T85 °C EEx d IIC T6

Ambient temperature range:
— –40 to 75 °C (–40 to 167 °F)

OR
Identification
— II 3 GD T50 °C EEx nL IIC T6
— II 3 GD T95 °C EEx nL IIC T4
(refer to 'EEx ia' for additional data)

Hazardous Atmospheres – Factory Mutual (FM) Intrinsically Safe – ordering code EA (see page 22)

Transmitter with 4 to 20 mA output signal and HART communication

Intrinsically safe:
— Class I; Division 1; Groups A, B, C, D
— Class I; Zone 0; Group IIC; AEx ia IIC

Degree of protection:
— NEMA Type 4X (indoor or outdoor)

Maximum permissible ambient temperatures depending on the temperature class:

Umax = 30 V, Ci = 10.5 nF, Li = 10 µH			
Ambient temperature	Temperature class	Imax	Pi
–40 to 85 °C (–40 to 185 °F)	T4	200 mA	0.8 W
–40 to 70 °C (–40 to 158 °F)			1 W
–40 to 40 °C (–40 to 104 °F)	T5	25 mA	0.75 W
	T6		0.5 W

Fieldbus transmitters (PROFIBUS PA/FOUNDATION Fieldbus)

Intrinsically safe:
— Class I, II and III; Division 1; Groups A, B, C, D, E, F, G
— Class I; Zone 0; AEx ia Group IIC T6, T4;
Non-incendive Class I, II and III; Division 2;
Groups A, B, C, D, E, F, G

Hazardous Atmospheres – Factory Mutual (FM) Explosion Proof – ordering code EB (see page 22)

Transmitters with 4 to 20 mA output signal and HART communication and Fieldbus transmitter (PROFIBUS PA/ FOUNDATION Fieldbus)

Explosion proof:
— Class I; Division 1; Groups A, B, C, D
— Class II/III; Division 1; Groups E, F, G

Degree of protection:
— NEMA Type 4X (indoor or outdoor)

Hazardous Atmospheres – Canadian standard (CSA) – ordering code EE (see page 22)

Transmitter with 4 to 20 mA output signal and HART communication and Fieldbus transmitter (PROFIBUS PA/FOUNDATION Fieldbus)

Explosion proof:
— Class I; Division 1; Groups B, C, D
— Class IIC/III; Division 1; Groups E, F, G

Degree of protection:
— NEMA Type 4X (indoor or outdoor)

Operating influences – OriMaster V

Ambient temperature
Per 20 K (36 °F) change between the limits of –20 to 65 °C (–4 to 150 °F):

Sensor code	for TD	
E, G, H	15:1	± (0.02 % URL + 0.026 % span)

but not greater than total ± 0.10 % of URL from –40 to 85 °C (–40 to 185 °F)

Static pressure
(zero errors can be calibrated out at line pressure)

Per 7 MPa, 70 bar or 1015 psi

Zero error:
— ±0.06 % of URL

Span error:
— ±0.06 % of reading

Supply voltage
Within voltage/load specified limits the total effect is less than 0.005 % of URL per volt

Load
Within voltage/load specified limits the total effect is negligible

Electromagnetic field
Total effect is less than 0.06 % of span from 20 to 1000 MHz and for field strengths up to 10 V/m when tested with shielded conduit and grounding, with or without meter.

Common mode interference
No effect from 100 V rms @ 50 Hz or 50 V DC

Mounting position
Rotations in plane of diaphragm have negligible effect. A tilt to 90 ° from vertical causes a zero shift up to 0.6 kPa, 6 mbar or 2.4 in. H_2O; this can be corrected with the zero adjustment. No span effect.

Stability
±0.15 % of URL over a ten year period

Operating influences – OriMaster M

Ambient temperature (for turndown up to 15:1)
Per 20 K (36 °F) change between the limits of –20 to 65 °C (–4 to 150 °F)

For differential pressure sensor

±(0.04 % URL + 0.065 % span)

Per 20 K (36 °F) change between the limits of –40 to 80 °C (–40 to 176 °F)

For absolute pressure sensor

±(0.08 % URL + 0.008 % span)
Limited to ±(0.1 % URL + 0.1 % span) per the complete temperature range of 120 K (216 °F)

Static pressure
(zero errors can be calibrated out at line pressure)

Measuring range	Sensors C, F, L
on zero	up to 100 bar: 0.05 % URL
	> 100 bar: 0.05 % URL/100 bar
on span	up to 100 bar: 0.05 % span
	> 100 bar: 0.05 % span/100 bar

Supply voltage
Within voltage/load specified limits the total effect is less than 0.001 % of URL per volt.

Load
Within load/voltage specified limits the total effect is negligible.

Electromagnetic field
Total effect: less than 0.05 % of span from 80 to 1000 MHz and for field strengths up to 10 V/m when tested with unshielded conduit, with or without meter.

Common mode interference
No effect from 250 V rms @ 50 Hz or 50 V DC

Mounting position

Rotations in plane of diaphragm have negligible effect. A tilt from vertical causes a zero shift of sin α x 0.35 kPa (3.5 mbar, 1.4 in. H_2O) of URL; this can be corrected with the zero adjustment. No span effect.

Stability

±0.15 % of URL over a sixty-month period

OriMaster FPD500
Compact orifice flowmeter

Overall dimensions – OriMaster V

Dimensions in mm (in.)

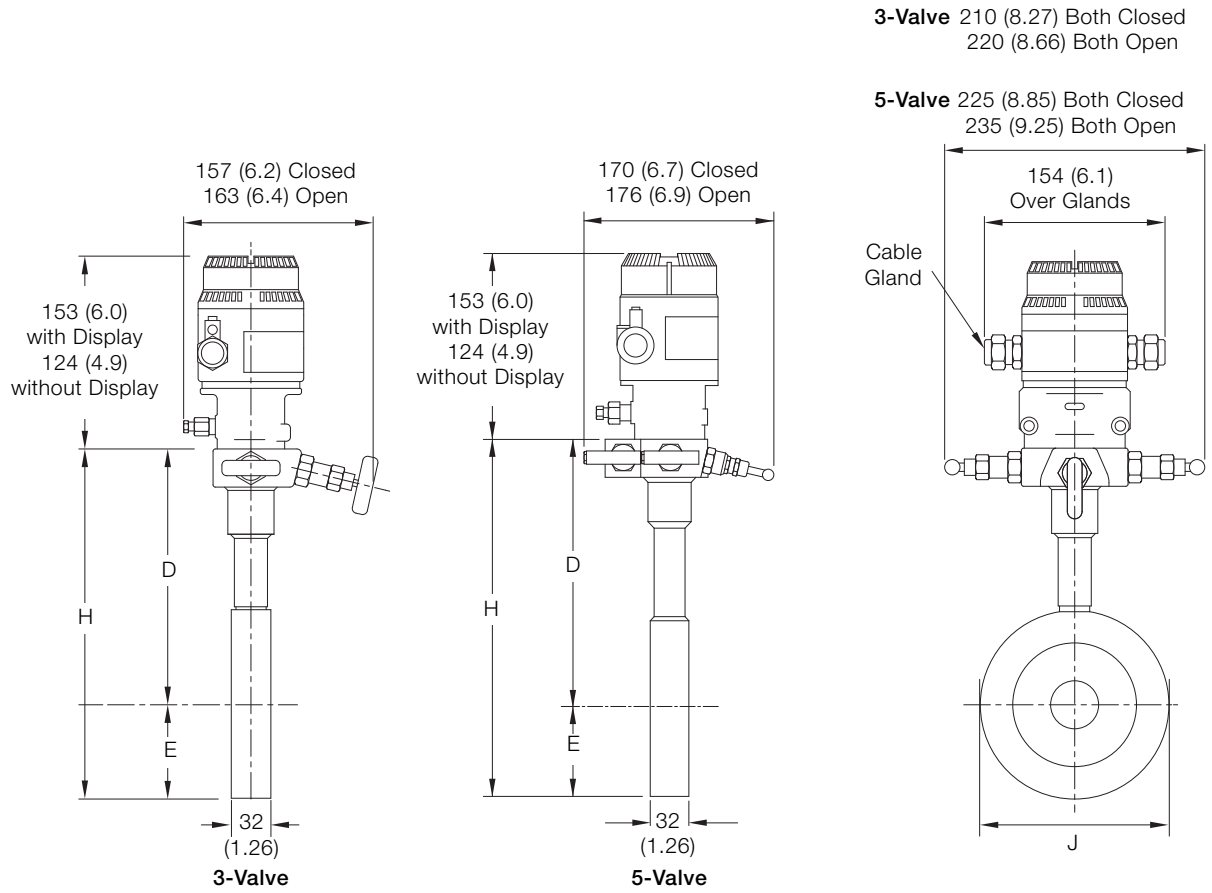

Fig. 5: OriMaster V1 and V3 – 3-valve and 5-valve

Size	H	J	E (J/2)	D (H – E)
25 (1)	180 (7.10)	50.8 ±1 (2.00 ±0.04)	25.4 ±0.5 (1.00 ±0.02)	154.6 ±5 (6.10 ±0.20)
40 (1 1/2)	203 (8.00)	73.2 ±1 (2.88 ±0.04)	36.6 ±0.5 (1.44 ±0.02)	166.4 ±5 (6.56 ±0.20)
50 (2)	221 (8.70)	92.1 ±1 (3.63 ±0.04)	46.05 ±0.5 (1.81 ±0.02)	174.95 ±5 (6.89 ±0.20)
80 (3)	257 (10.12)	127 ±1 (4.99 ±0.04)	63.5 ±0.5 (2.50 ±0.02)	193.5 ±5 (7.62 ±0.20)
100 (4)	314 (12.36)	157.2 ±1 (6.19 ±0.04)	78.6 ±0.5 (3.09 ±0.02)	235.4 ±5 (9.27 ±0.20)
150 (6)	372 (14.65)	215.9 ±1 (8.50 ±0.04)	107.95 ±0.5 (4.25 ±0.02)	264.05 ±5 (10.40 ±0.20)
200 (8)	426 (16.77)	269.9 ±1 (10.63 ±0.04)	134.95 ±0.5 (5.31 ±0.02)	291.05 ±5 (11.46 ±0.20)
250 (10)	502 (19.76)	323.8 ±1 (12.75 ±0.04)	161.9 ±0.5 (6.37 ± 0.20)	340.1 ±5 (13.39 ±0.20)
300 (12)	560 (22.04)	381 ±1 (15.00 ± 0.04)	190.5 ±0.5 (7.50 ± 0.20)	369.5 ±5 (14.55 ±0.20)

OriMaster V1 and V3 – 3-valve and 5-valve sizing table (dimensions in mm (in.))

Dimensions in mm (in.)

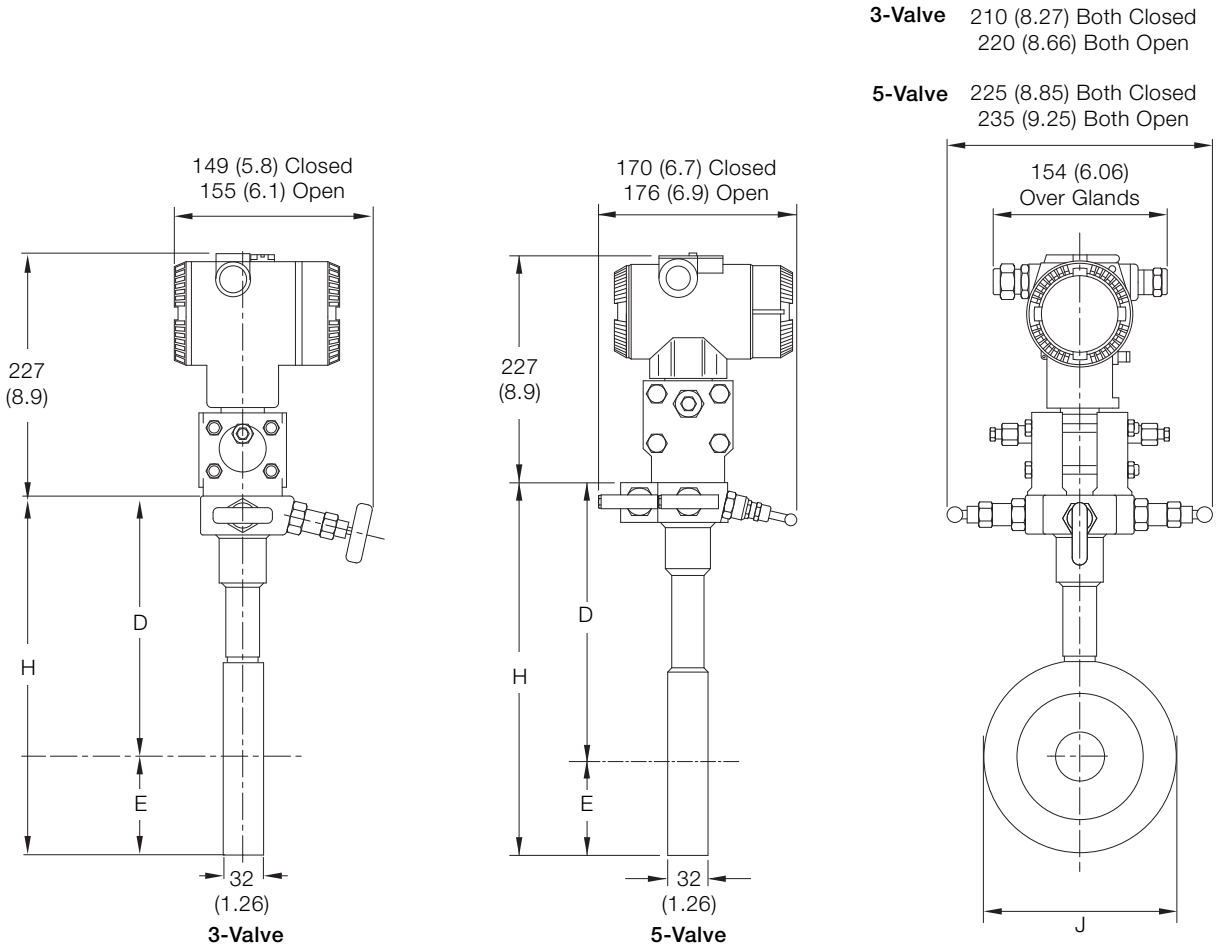

Fig. 6: OriMaster V2 and V4 – 3-valve and 5-valve

Size	H	J	E (J/2)	D (H – E)
25 (1)	180 (7.10)	50.8 ±1 (2.00 ±0.04)	25.4 ±0.5 (1.00 ±0.02)	154.6 ±5 (6.10 ±0.20)
40 (1½)	203 (8.00)	73.2 ±1 (2.88 ±0.04)	36.6 ±0.5 (1.44 ±0.02)	166.4 ±5 (6.56 ±0.20)
50 (2)	221 (8.70)	92.1 ±1 (3.63 ±0.04)	46.05 ±0.5 (1.81 ±0.02)	174.95 ±5 (6.89 ±0.20)
80 (3)	257 (10.12)	127 ±1 (4.99 ±0.04)	63.5 ±0.5 (2.50 ±0.02)	193.5 ±5 (7.62 ±0.20)
100 (4)	314 (12.36)	157.2 ±1 (6.19 ±0.04)	78.6 ±0.5 (3.09 ±0.02)	235.4 ±5 (9.27 ±0.20)
150 (6)	372 (14.65)	215.9 ±1 (8.50 ±0.04)	107.95 ±0.5 (4.25 ±0.02)	264.05 ±5 (10.40 ±0.20)
200 (8)	426 (16.77)	269.9 ±1 (10.63 ±0.04)	134.95 ±0.5 (5.31 ±0.02)	291.05 ±5 (11.46 ±0.20)
250 (10)	502 (19.76)	323.8 ±1 (12.75 ±0.04)	161.9 ±0.5 (6.37 ± 0.20)	340.1 ±5 (13.39 ±0.20)
300 (12)	560 (22.04)	381 ±1 (15.00 ± 0.04)	190.5 ±0.5 (7.50 ± 0.20)	369.5 ±5 (14.55 ±0.20)

OriMaster V2 and V4 – 3-valve and 5-valve sizing table (dimensions in mm (in.))

Overall dimensions – OriMaster M

Dimensions in mm (in.)

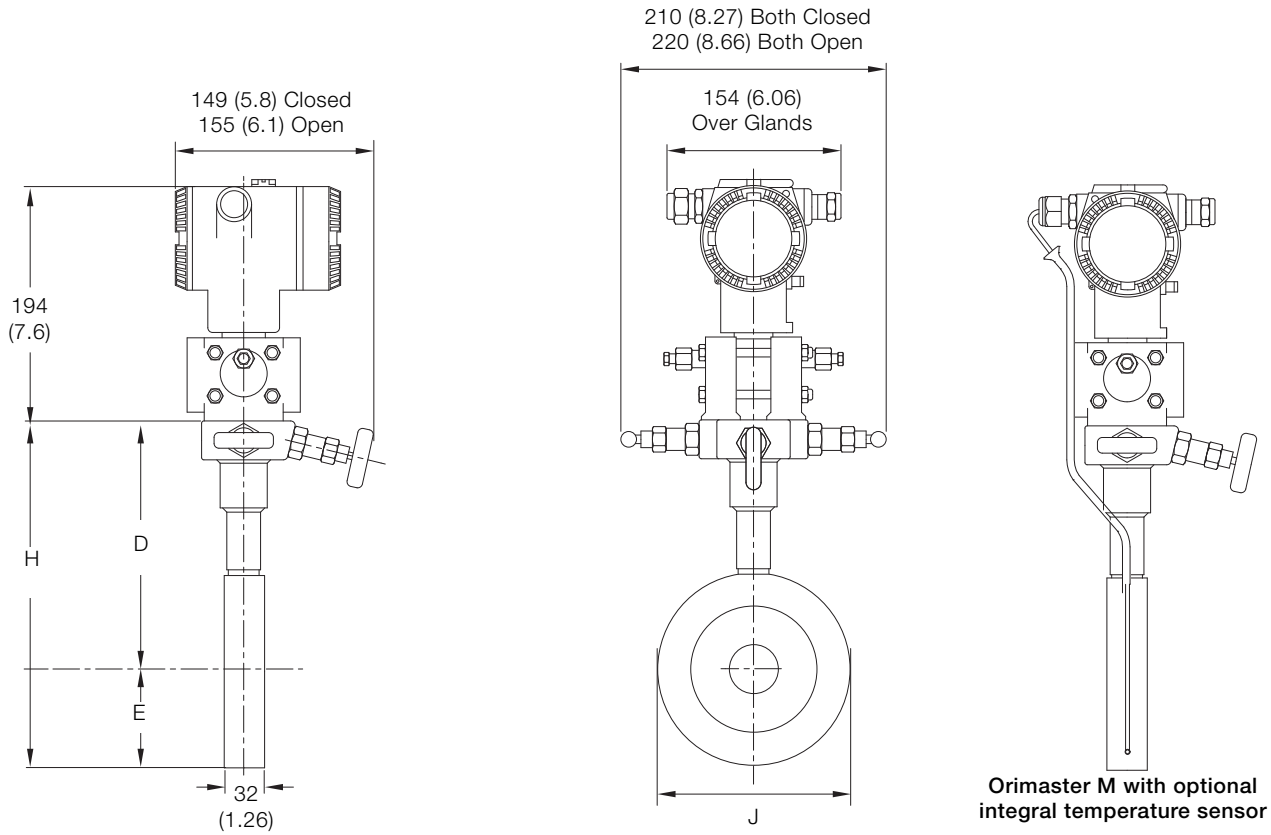

Fig. 7: OriMaster M1 and M3 – 3-valve

Size	H	J	E (J/2)	D (H – E)
25 (1)	180 (7.1)	50.8 ±1 (2.00 ±0.04)	25.4 ±0.5 (1.00 ±0.02)	154.6 ±5 (6.10 ±0.20)
40 (1 1/2)	203 (8)	73.2 ±1 (2.88 ±0.04)	36.6 ±0.5 (1.44 ±0.02)	166.4 ±5 (6.56 ±0.20)
50 (2)	221 (8.7)	92.1 ±1 (3.63 ±0.04)	46.05 ±0.5 (1.81 ±0.02)	174.95 ±5 (6.89 ±0.20)
80 (3)	257 (10.12)	127 ±1 (4.99 ±0.04)	63.5 ±0.5 (2.50 ±0.02)	193.5 ±5 (7.62 ±0.20)
100 (4)	314 (12.36)	157.2 ±1 (6.19 ±0.04)	78.6 ±0.5 (3.09 ±0.02)	235.4 ±5 (9.27 ±0.20)
150 (6)	372 (14.65)	215.9 ±1 (8.50 ±0.04)	107.95 ±0.5 (4.25 ±0.02)	264.05 ±5 (10.40 ±0.20)
200 (8)	426 (16.77)	269.9 ±1 (10.63 ±0.04)	134.95 ±0.5 (5.31 ±0.02)	291.05 ±5 (11.46 ±0.20)
250 (10)	502 (19.76)	323.8 ±1 (12.75 ±0.04)	161.9 ±0.5 (6.37 ±0.02)	340.1 ±5 (13.39 ±0.20)
300 (12)	560 (22.04)	381 ±1 (15.00 ±0.04)	190.5 ±0.5 (7.5 ±0.02)	369.5 ±5 (14.55 ±0.20)

OriMaster M1 and M3 – 3-valve sizing table (dimensions in mm (in.))

Dimensions in mm (in.)

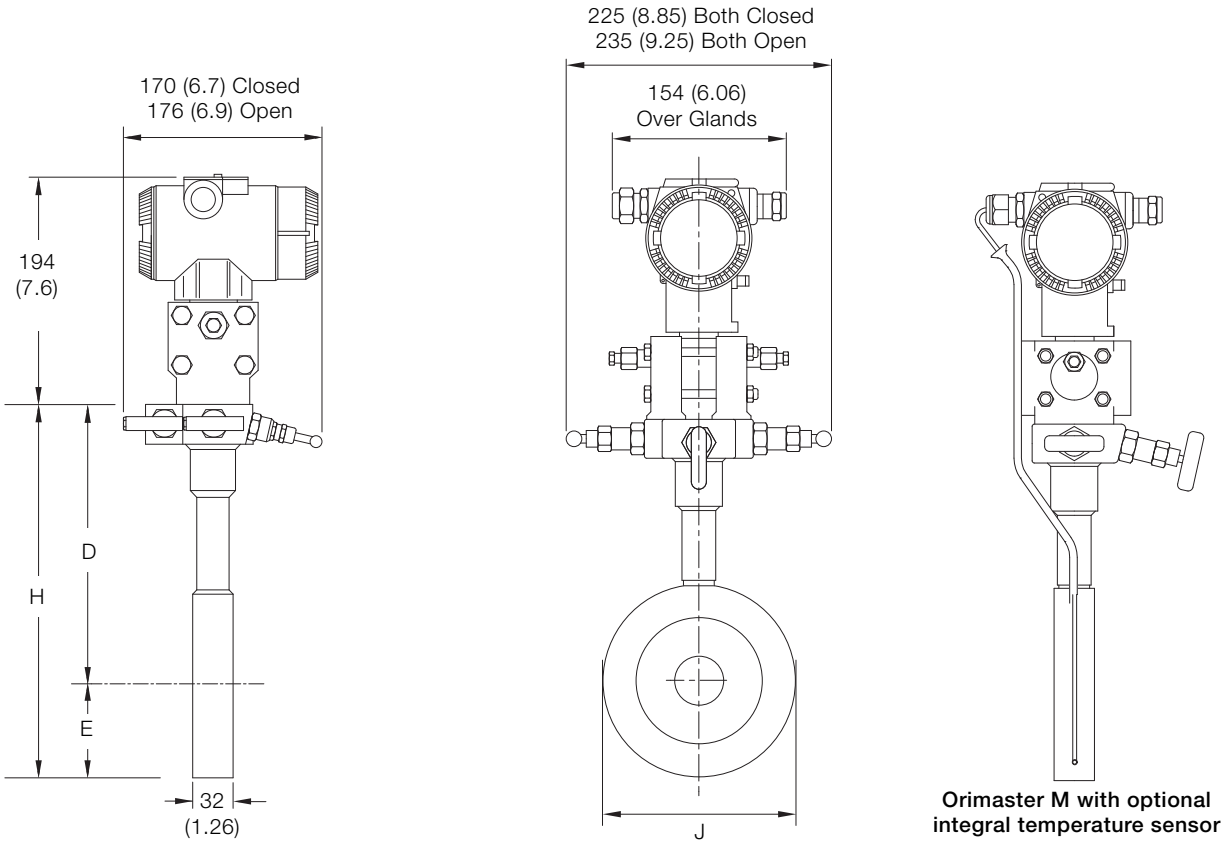

Fig. 8: OriMaster M1 and M3 – 5-valve

Size	H	J	E (J/2)	D (H – E)
25 (1)	180 (7.1)	50.8 ±1 (2.00 ±0.04)	25.4 ±0.5 (1.00 ±0.02)	154.6 ±5 (6.10 ±0.20)
40 (1½)	203 (8)	73.2 ±1 (2.88 ±0.04)	36.6 ±0.5 (1.44 ±0.02)	166.4 ±5 (6.56 ±0.20)
50 (2)	221 (8.7)	92.1 ±1 (3.63 ±0.04)	46.05 ±0.5 (1.81 ±0.02)	174.95 ±5 (6.89 ±0.20)
80 (3)	257 (10.12)	127 ±1 (4.99 ±0.04)	63.5 ±0.5 (2.50 ±0.02)	193.5 ±5 (7.62 ±0.20)
100 (4)	314 (12.36)	157.2 ±1 (6.19 ±0.04)	78.6 ±0.5 (3.09 ±0.02)	235.4 ±5 (9.27 ±0.20)
150 (6)	372 (14.65)	215.9 ±1 (8.50 ±0.04)	107.95 ±0.5 (4.25 ±0.02)	264.05 ±5 (10.40 ±0.20)
200 (8)	426 (16.77)	269.9 ±1 (10.63 ±0.04)	134.95 ±0.5 (5.31 ±0.02)	291.05 ±5 (11.46 ±0.20)
250 (10)	502 (19.76)	323.8 ±1 (12.75 ±0.04)	161.9 ±0.5 (6.37 ±0.02)	340.1 ±5 (13.39 ±0.20)
300 (12)	560 (22.04)	381 ±1 (15.00 ±0.04)	190.5 ±0.5 (7.5 ±0.02)	369.5 ±5 (14.55 ±0.20)

OriMaster M1 and M3 – 5-valve sizing table (dimensions in mm (in.))

OriMaster FPD500
Compact orifice flowmeter

Ordering Information

		Main code											Optional code					
OriMaster compact orifice flowmeter	**FPD500**	XX	XX	X	X	XX	X	X	X	X	X	X	XX	XX	XX	XX	XX	XX
Model and design level																		
Volume flow fixed plate (364DS)	V1																	
Volume flow fixed plate (266DSH)	V2																	
Volume flow removable plate (364DS)	V3*																	
Volume flow removable plate (266DSH)	V4*																	
Mass flow fixed plate (267CS)	M1																	
Mass flow removable plate (267CS)	M3*																	
Meter size																		
25 mm. (1 in.)	10																	
40 mm (1½ in.)	15																	
50 mm (2 in.)	20																	
80 mm (3 in.)	30																	
100 mm (4 in.)	40																	
150 mm (6 in.)	60																	
200 mm (8 in.)	80																	
250 mm (10 in.)	90																	
300 mm (12 in.)	92																	
Fluid																		
Liquid	L																	
Gas	G																	
Saturated steam	S																	
Beta ratio																		
0.4	1																	
0.65	2																	
Pressure rating																		
ASME CL 150	A1																	
ASME CL 300	A3																	
ASME CL 600	A6																	
PN 10	D1																	
PN 16	D2																	
PN 25	D3																	
PN 40	D4																	
PN 63	D5																	
PN 100	D6																	
Pipeline orientation																		
Horizontal pipe	H																	
Vertical pipe **	V																	

See page 22

Continued on next page …

*Not available for meter sizes below 100 mm. (4 in.)

** Not available for steam applications

OriMaster compact orifice flowmeter	FPD500	Main code												Optional code					
		XX	XX	X	X	XX	X	X	X	X	X	X	XX	XX	XX	XX	XX	XX	XX
		See page 20												See next page …					

Manifold	
Integral 3-valve manifold	3
Integral 5-valve manifold	5
DP span limits	
0.05 … 1 kPa / 0.5 … 10 mbar / 0.2 … 4 in. H_2O	A
0.2 … 4 kPa / 1.4 … 40 mbar / 0.56 … 16 in. H_2O	B
0.2 … 6 kPa / 2 … 60 mbar / 0.8 … 24 in. H_2O [2]	C
0.27 … 16 kPa / 2.7 … 160 mbar / 1.08 … 64 in. H_2O [1]	E
0.4 … 40 kPa / 4 … 400 mbar / 1.6 … 160 in. H_2O [2]	F
0.65 … 65 kPa / 6.5 … 650 mbar / 2.6 … 260 in. H_2O [1]	G
1.6 … 160 kPa / 16 … 1600 mbar / 6.4 … 642 in. H_2O [1]	H
2.5 … 250 kPa / 25 … 2500 mbar / 10 … 1000 in. H_2O [2]	L
Transmitter seal material	
Without seal [1]	0
Viton [2]	3
PTFE [2]	4
EPDM [4]	5
Perbunan [4]	6
Electronic housing material / electrical connection	
Aluminium Alloy 1/2 –14 NPT [2]	A
Aluminium Alloy M20 x 1.5 [2]	B
AISI 304L SST 1/2 –14 NPT [1]	H
AISI 304L SST M20 x 1.5 [1]	L
AISI 316L SST 1/2 –14 NPT	S
AISI 316L SST M20 x 1.5	T
Integrated digital display (LCD)	
None (blind)	0
Integrated LCD display	1
Integrated LCD display (backlit) [4]	2
TTG (through-the-glass) controlled LCD display [3]	5
Output signal	
HART digital communications and 4 … 20 mA	H1
HART digital communications and 4 … 20 mA, SIL2 and SIL3 certified to IEC 61508 [3]	H2
PROFIBUS PA [3]	P1
FOUNDATION Fieldbus [3]	F1
Modbus RS485 [4]	M1
Wireless HART	W1

[1] Model and design level V1 and V3 only

[2] Model and design level V2, V4, M1 and M3 only

[3] Model and design level V2 and V4 only

[4] Model and design level M1 and M3 only

OriMaster FPD500
Compact orifice flowmeter

OriMaster compact orifice flowmeter

	Main code												Optional code					
FPD500	XX	XX	X	X	XX	X	X	X	X	X	X	XX	XX	XX	XX	XX	XX	XX
	See page 20						See page 21											

Temperature element

Integral [2]	AT
Remote [2]	AR
None [1]	AY

Calibration

Standard water calibration at reference conditions	CW
Other	CZ

Certificates

Material monitoring with inspection certificate 3.1 in accordance with EN 10204	C2
Material monitoring NACE MR 01-75 with inspection certificate 3.1 in accordance with EN 10204	CN

Explosion protection certification

ATEX + FM + CSA [1]	EN
Factory Mutual (FM) – Intrinsically Safe [2]	EA
Factory Mutual (FM) – Explosion Proof [2]	EB
Canadian Standard Association – Explosion Proof [2]	EE
ATEX II 1/2 GD, EEx ia + ATEX II 1/2 GD EEx d + ATEX EEx nL [2]	EW

Documentation language

German	M1
Italian	M2
Spanish	M3
French	M4
English	M5
Chinese	M6

Special applications

Degreased (oil and grease free) with inert capsule filling for oxygen applications	P1
Gold plated diaphragm (silicone oil filled) for hydrogen applications	P2

[1] Model and design level V1, V2, V3 and V4 only

[2] Model and design level V2, V4 only

Acknowledgements

MODBUS is a registered trademark of the Modbus-IDA organization
PROFIBUS is a registered trademark of Profibus International
FOUNDATION is a trademark of the Fieldbus Foundation
HART is a registered trademark of the HART Communication Foundation

Contact us

ABB Limited
Process Automation
Salterbeck Trading Estate
Workington, Cumbria
CA14 5DS
UK
Tel: +44 (0)1946 830 611
Fax: +44 (0)1946 832 661

ABB Inc.
Process Automation
125 E. County Line Road
Warminster
PA 18974
USA
Tel: +1 215 674 6000
Fax: +1 215 674 7183

www.abb.com

Note
We reserve the right to make technical changes or modify the contents of this document without prior notice. With regard to purchase orders, the agreed particulars shall prevail. ABB does not accept any responsibility whatsoever for potential errors or possible lack of information in this document.

We reserve all rights in this document and in the subject matter and illustrations contained therein. Any reproduction, disclosure to third parties or utilization of its contents – in whole or in parts – is forbidden without prior written consent of ABB.

Copyright© 2013 ABB
All rights reserved

3KXF511501R1001

Sales

Service

Software

DS/FPD500-EN Rev. H 10.2013

Power and productivity
for a better world™