ABB MEASUREMENT & ANALYTICS | DATA SHEET

AquaMaster4 FEW4 and FET4

Electromagnetic flowmeter

Measurement made easy

The ideal flowmeter for potable water distribution networks, revenue metering and irrigation applications

Multiple measurement parameters
- flow rate, flow velocity, volume flow (forward, reverse and net) and pressure (option)

Multiple power options
- battery (with up to 10 years life), solar/wind renewable and AC mains

Wide range of sensor styles and size
- reduced bore DN40 to 600, virtual full bore DN40 to 200, full bore DN250 to 2400 and probe 300 to 1000 mm

Ideal for arduous applications
- IP68 for submersion and up to 5m buriable

Verification
- in situ diagnostics and self checking capabilities

Flexible communications
- pulse, Modbus™ and Sensus™ with wireless interface to mobile smart phone/tablet

Applications

- Water supply in district/zonal metering area
- Revenue metering
- Leak monitoring in district/zonal metering area
- Survey and flow investigation
- Irrigation and abstraction
- Fire suppression systems

Additional product features

- In-situ diagnostics and self-checking capabilities with OIML R49 type P (optional)
- High and low flowrate alarms
- Backward compatible with legacy AquaMaster sensors
- Drinking water certifications: WRAS, NSF, ACS, AS/NZS 4020
- Certification: MID MI-001, NMI10, UL 327 B
- OIML R49 (pending)

Values to you

- Solution from the masters of flow measurement – in 1988, ABB invented and designed the world's first battery-powered electromagnetic flowmeter for DMA (District Metered Area)
- Invest smartly through 'single box' DMA solution – combining flow, pressure and data-logging
- Have greatest confidence in your billing based on highest accuracy with widest flow range revenue meter
- Get early warnings for leaks or bursts and reduce NRW (Non-Revenue Water) – highest confidence in night line performance
- Have highest confidence in the wet calibration – our flow rigs are certified by various national independent accredited bodies/laboratories all linked by the 'International Laboratory Accreditation Cooperation' (ILAC)
- Fit and flow with factory default settings. Use the ABB Velox Interface mobile smart phone/tablet app to easily change configuration/settings to your preference
- Lowest total cost of ownership (TOTEX) over complete product lifecycle
- Maximum confidence in the health of the flow meter through the use of ABB's SRV500 in-situ verification tool

Overview

Multiple power options

- 2 x internal batteries (up to 10 years life)
- Solar
- Wind
- AC mains

Interactive phone/tablet app – simple and easy

- Secured and easy
- Contactless
- Chart and retrieve data
- Offline configuration
- **Google Play** **Microsoft Store** Easy firmware update

Configurable features

- In-built logger
- Pressure measurement
- Self-checking to OIML R49 type P

Communications options

- Pulse output
- MODBUS
- Sensus protocol

Multiple sensor options

- Reduced bore DN40 to 600
- Virtual full bore DN40 to 200
- Full bore DN250 to 2400
- Probe 300 to 1000 mm

Measurement performance

- Accuracy up to ±0.2 % ±0.5 mm/s whichever is greater
- Range (R) up to R1000

Drinking water approvals

NSF | WRAS | AS/NZS 4020 | DVGW | ACS

Wide environmental conditions

- IP68 to 10 m and up to 5 m buriable
- –20 to 60 °C
- **Comparable to DIN ISO 12944** Corrosion resistance

Product type approvals (pending)

OIML R49 for accuracy class 1 and 2, NMI R49

Calibration rig approvals

ISO 17025 | UKAS | NATA | SIMT | NIST traceable

Why is AquaMaster4 your first choice for distribution networks and revenue metering applications?

Your challenge	Our offering	Advantages for you
Do you have confidence in your revenue meter and therefore in your water balance table?	AquaMaster4 offers highest accuracy with a wide flow range. Our 0D upstream and downstream reduced bore sensor is virtually insensitive to hydraulic disturbances as it conditions the upstream fluid flow profile within the sensor's central measuring zone giving superior performance; especially during the night when the flow rate is low. The AquaMaster4's in-built Data Logger runs at high speed, logging at a fast rate giving the user total flexibility to download (typically 15 minutes) logged data; then investigate, in precise detail, flow and pressure activity during a period of interest at even higher time resolution. Such high resolution data facilitates step testing, leakage detection and water network analysis. The in-built logger delivers accuracies which are not possible when using an external data logger.	Increase in revenue for authorized water consumption and early warnings on leaks (non-revenue water)
Do you want to reduce the cost for commissioning and interacting with the product?	A free app (Velox Interface) is available for use with Android and Windows™ smartphones and tablets. This supports simple configuration changes to made on your touchscreen color phone/ tablet. Just touch to upload, then configure offline, touch again to update the AquaMaster4 configuration. The logger contents can be downloaded as a file in industry-standard CSV format in the same manner. To ensure the product remains up-to-date with the latest features and enhancements, the firmware is updated using the Velox Interface app. 'Fit-and-Flow' data storage inside AquaMaster4 eliminates the need to match a remote sensor with a transmitter in the field. On initial installation, the self-configuration sequence replicates all calibration factors, meter size and serial numbers, together with customer site-specific settings, into the transmitter automatically, eliminating the opportunity for error.	Increase productivity of your staff/contractor and eliminate poor quality through human error
Do you want to have the lowest operational expenditure throughout the lifecycle of the product?	Using two standard off-the-shelf 'D' lithium cells, the AquaMaster4 can be operated for up to 10 years. Using a simple DC (6 to 32 V) connection from sources as small as a 5 W solar panel/wind generator, AquaMaster4 can be operated with green energy sources. There is no longer any need for bespoke cables and laptops to connect to each transmitter.	Lower cost of ownership
	In-situ self checking of flowmeter health enables the user to meet regulatory/technical requirements. In 1995 ABB invented and designed the world's first in-situ verification system for electromagnetic flowmeters. Building on ABB's fingerprint philosophy, each flow meter is verification tested before shipping from the factory. SRV500 enables the operator to choose whether to either use the factory fingerprint or, after product commissioning, to create a new fingerprint based on real site conditions.	Simplifies compliance to ISO 9001 traceability without any additional effort

...Overview

Protective cover with wire to the contactless coupler

The removable cover protects the transmitter display from accidental impact damage

Wall-mount contactless coupler

The wall mount coupler allows users to communicate easily using a mobile phone/tablet when the transmitter is located in inaccessible places (for example, a pit)

Upper display:
forward flow total
reverse flow total
net flow total

Flow direction
forward/reverse/net

Battery state

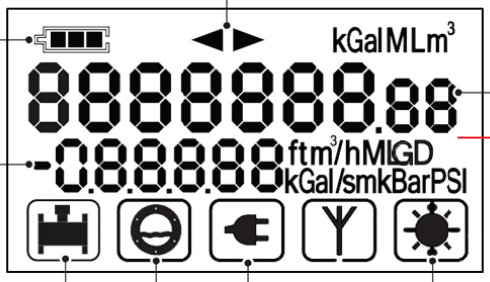

Sensor fault

Empty pipe condition

Mains failure

Future option

Renewable energy alarm

Lower display:
flowrate
flow velocity,
pressure

Display

Contactless communication

Interacting with the transmitter is easily achieved with an Android/ Microsoft smart phone/tablet over NFC

IP68 connectors

IP68 rated as standard, the transmitter can be fully-submerged for up to 2 meters

Anti-tamper seal

Secured against any tampering, meeting MID MI-001 regulations

Battery enclosure

Enclosure for 2 off-the-shelf standard lithium batteries

Range of flange options

ISO 7005, DIN, EN 1092-1 PN10/PN16 / PN25/PN40
ANSI/ASME B16.5/16.47 series B Class 150/Class 300
AWWA C207 Class B/D/E
AS 4087 PN16
AS2129 Table E
JIS 7.5K/10K/5K

IP68, NEMA 6P

All sensor types are, as standard, inherently submersible thus ensuring suitability for installation in chambers and metering pits that are prone to flooding

Sensor memory

The sensor stores all calibration factors, site settings and serial numbers enabling users to fit-and-flow

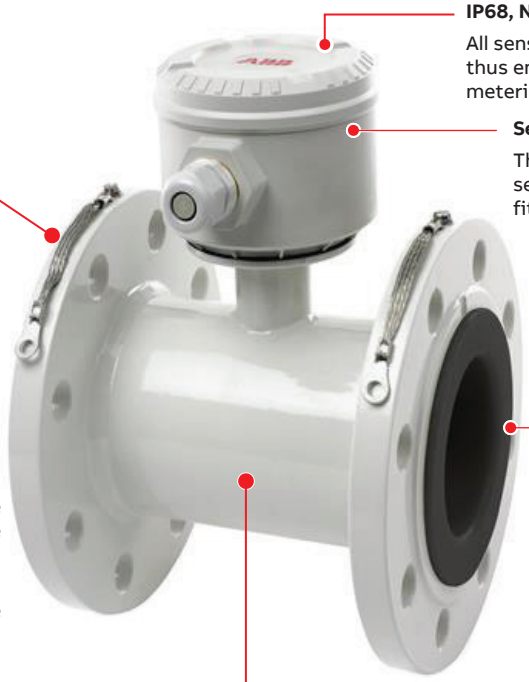

Drinking water approvals

NSF | WRAS | AS/NZS 4020 | DVGW | ACS

EN ISO 12944 C4 grade comparable corrosion resistance

Zinc-based primed with =70 µm (optional 300 µm) thick paint coat will give long lasting corrosion resistance even in arduous applications

Upstream and downstream pipe length

Reduced bore DN40 to 600 requires 0D upstream and downstream

Virtual full bore DN40 to 200 requires 5D upstream and 0D downstream

Full bore DN250 to 2400 requires 5D upstream and 2D downstream

Available in both integral and remote form

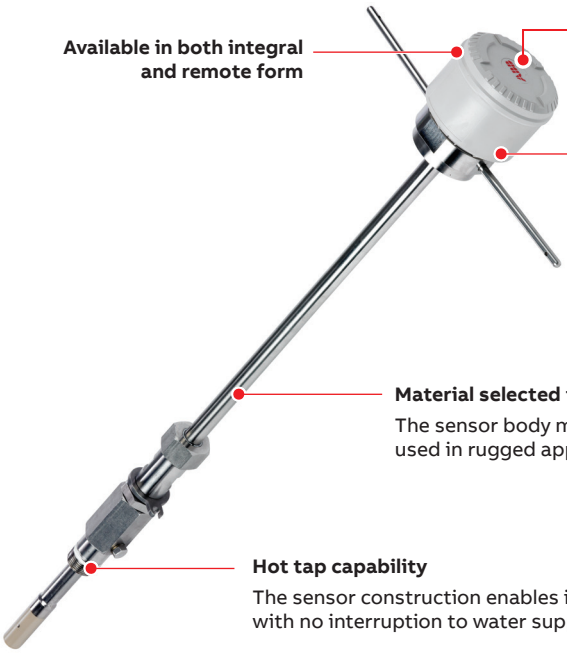

IP68, NEMA 6P

All sensor types are, as standard, inherently submersible thus ensuring suitability for installation in chambers and metering pits that are prone to flooding

Sensor memory

The sensor stores all calibration factors, site settings and serial numbers enabling users to fit-and-flow

Material selected to last

The sensor body material enables it to be used in rugged applications

Hot tap capability

The sensor construction enables installation with no interruption to water supply

Calibration in ABB flow laboratory

Figure 1 ABB calibration rig – certificated by ISO, UKAS, NATA, SIMT and NIST traceable

ABB's flow calibration facilities are certified by various national independent accredited bodies/laboratories and these are all are linked by the 'International Laboratory Accreditation Cooperation' (ILAC7).

Flowmeters in ABB's facilities can be calibrated by one of the following methods:

- gravimetric (using weigh scales)
- volumetric (using the meter prover)
- comparison (using reference meters)

Additionally, ABB's laboratories are checked against each other and against external accredited laboratories using transfer standard meters.

Gravimetric

In this method, the flowmeter is calibrated in a pipeline, with water being pumped through it from a sump. A diverter valve situated downstream directs the flow from the meter either back to the sump or to a tank of sufficient capacity attached to a highly accurate weighing system.

Volumetric

There are two main methods of volumetric calibration:

- Fixed volume volumetric tank method
  - This method works in a similar way to the gravimetric method, except that the flow from the meter is diverted into a tank of known volumetric capacity. This eliminates the need for a weighing system or to calculate the volume of water from its weight.
- Fixed volume ball meter prover
  - In this method, the diverter valve directs the flow from the meter into a meter prover. The prover is a precisely manufactured section of pipe containing a sphere that is three percent larger in diameter than the pipe. Two detector switches are situated in the pipe at a fixed distance apart. The volume of water that is contained in the pipe between the switches is known as the calibrated volume.

Comparison

In this method, the flowmeter under calibration is installed in a pipeline in series with a reference, or master, flowmeter with a known calibration. Once the flow of water through both meters is stable, a timer is started and the outputs of both meters are simultaneously monitored. After a set period, the timer is stopped. Using the data from the calibration run enables the average flowrate of the meter under test to be compared with the master meter, with the difference being the error.

Advantages of ABB's calibration rig

ABB has one of the largest calibration facilities in the world, capable of pumping 2.5 m^3/s, enabling larger meters to be calibrated at high flowrates.

All of ABB calibration facilities are continuously pumped enabling a flowmeter to calibrated at a steady flowrate (for example, over 300 or 600 seconds; or longer if required), to reduce a meter's random uncertainty errors during calibration.

ABB's high turndown flowmeters (those with a high R number) can be calibrated over an extended flow range, guaranteeing accurate flowmeter performance over its full operating range.

Verification

What is verification?
Verification is the inspection and testing of a product to establish that it meets regulatory/technical requirements Industrial instrumentation is robust, very reliable and designed to operate for many years with minimal maintenance. In today's competitive environment customers are looking for ways to maximize their profitability, regular product verifications is one way to ensure processes continuously operate at their peak.

The ABB verification story
Customers in the water and process industries have been able to save large sums of money thanks to ABB's innovations in product verification over the last two decades.

1995
CalMaster released
Worlds first flow verification system
Step change in regulatory compliance and flow maintenance
Tests to within 1% of original calibration certificate

2006
CalMaster2 released
Worlds first battery powered flow meter verification system

2008
VeriMaster and ScanMaster released
Flow verification testing without interrupting the measurement
Testing using revolutionary in-built diagnostics coming from the flowmeter itself

2017
SRV500 released
Multi-product verification platform
Digital solution with secure data storage in ABB cloud
Flexible licence options

Introducing SRV500
The next generation verification tool suite for use with ABB's complete range of active electronic flow meters. Download the software for free and use the instrument-specific test routine to provide the best possible check of product health, without stopping your process.

SRV500 verifies the condition and performance of the flow meter under test. With the licensed software version, test reports can be generated and stored locally for further analysis. SRV500 also analyzes the product internal diagnostics and compares the results with historical measurements.

SRV500 enables the operator to choose whether to use either the factory fingerprint or to create a new fingerprint based on real site conditions after product commissioning. All verifications performed in the field can then be compared with the fingerprint data and previous tests to ensure flow meter performance has not degraded.

Specification – transmitter

Mounting on flow sensor

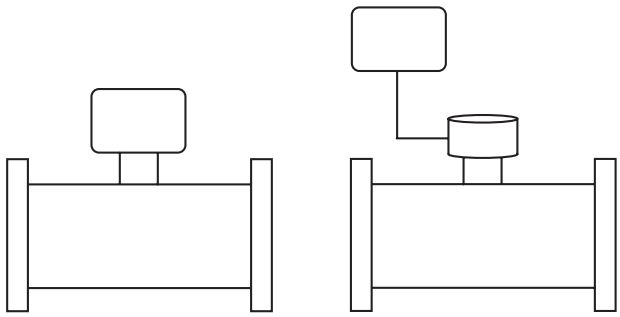

Integral with sensor

Remote with up to 150 m (492 ft) cable

Power supply

Battery AC mains Solar Wind

Battery power

2 lithium thionyl chloride 'D' batteries

Note. The following batteries work with the product:

- SAFT LS33600 *
- Eve ER34615 *
- GB Cell ER34615
- cT-energy ER34615
- OmniCel ER34615
- GEBC ER34615
- LiYa ER34615
- Fanzo ER34615H

* Preferred

Nominal battery life

Sensor style	Size	Integral mount transmitter	Remote mount transmitter
Reduced bore	DN40 to 80	10.5 years	8 years
	DN100 to 300	7 years	5.5 years
	DN350 to 600	6 years	5 years
Virtual full bore	DN40 to 200	10.5 years	8 years
Full bore	DN250 to 600	6 years	5 years
	DN700 to 2400	2.5 years	2 years
Probe	300 to 1000 mm	10.5 years	8 years

Test conditions:

- acquisition = 15 seconds
- pulse output = 2 Hz @ 5 ms
- alarm output on = 25 %
- logger rate = 1 minute
- with pressure
- integral verification self check = 15 minutes
- ambient temperature = 20 °C

Battery capacity and life are significantly shortened:

- when the operating environment temperature ranges between –20 and 0 °C or 50 and 70 °C (–4° and 32 °F or 122 and 158 °F)
- when data acquisition is less than 15 seconds
- when pulse output width > 5 ms and output frequency is set high
- with extended NFC interface use
- Class 1/0.2 % factory calibration (RDF in ordering code) and Class 2/ Class 1 calibration to OIML R49 options (RCM and RCN in ordering code)

Mains supply (option – remote only)

- 95 to 240 V AC, 50/60 Hz, 3 VA
- Mains connection cable: approx. 3 m (9.8 ft)

Internal backup power time for:

- DN40 to 200: 16 days
- DN250 to 600: 6 days
- DN700 to 2400: 3 days

Renewable power (option)

- Solar or wind
- Input voltage: 6 to 32 V DC @ 5 W
- Max. current: 200 mA

Internal backup time for:

- DN40 to 200: 48 days
- DN250 to 600: 18 days
- DN700 to 2400: 9 days

Note. Renewable energy generators do not operate at maximum capacity. For example, low wind speeds, dirty solar panels and shorter daylight periods all reduce capacity. Consequently, some installations may require generators with a capacity greater than the specified 5 W minimum.

Inputs

- IP68 connectors, mains cable (remote only)
- Sensor cable (remote only). ABB sensor cable supplied as standard. SWA cable available (via adapter box) on application
- Pressure transducer connection (option)

Configuration/User interface

ABB Velox Interface app on a compatible tablet or smartphone. Operating systems of smartphone or tablet are Android (Kit Kat or newer) and Windows (10 mobile or newer). Functions of Velox Interface include configuration, diagnostics, logger data retrieval and transmitter flash update.

Outputs

- Pulse/Alarm
- RS485 Modbus
- Sensus protocol

Pulse outputs (option)

- Output 1: forward pulses
- Output 2: reverse pulses
- +35 V @ 20 mA solid state, unipolar
- Isolated with one common, shared with alarm output max. ±50 V to earth
- 50 Hz max., programmable pulse width, default 2 ms *

* Increasing pulse width beyond 2 ms at frequencies greater than 10 Hz reduces battery life

Modbus interface (option)

- Modbus RTU over 2-wire EIA-485
- Supported baud rates: 9600 and 19200
- Max. devices on bus segment: 32
- Max. response time, 1 registered read: 60 ms
- Max. response time, 1 registered write: 600 ms

Alarm outputs (option)

- Indicates any problem with measurement, power supply or flowrate alarm
- Bi-directional, solid state
- +35 V @ 50 mA
- Isolated with one common, shared with pulse outputs

Automatic meter reading (AMR)

3-wire Sensus compatible

Logger

Logger function	Flow and pressure	Forward, reverse, and net flow totals
No. of records	45871	3120
Logging interval *	15 seconds 30 seconds 1 minute 5 minutes 15 minutes (selectable)	24 hours (fixed)
Logger capacity	31 days @ 1 minute 477 days @ 15 minutes	8 years

* Based on a default 15 second measurement rate when operating on battery or renewable power

Retrieval of logger data file via smartphone/tablet – see **Configuration/User interface** on page 10

Logger data file format

- .csv for easy import into databases/spreadsheets
- Time-stamped records with flow, pressure and totalizers in user-configured units of measurement

Response time (programmable)

>0.1 second (mains-powered)

15 seconds (battery-powered + external renewable energy)

Environmental and operating conditions

Ingress rating

IP68 (NEMA 6P), <2m (6 ft)

Submerged

9 months accrued time

Humidity

0 to 100 %

Temperature ranges

Storage: –20 to 60 °C (–4 to 140 °F)

Ambient: –20 to 60 °C (–4 to 140 °F)

Transmitter vibration

IEC 60068-2-6 (2007)

Vibration level 2g

Options and certifications

Compatible sensor styles

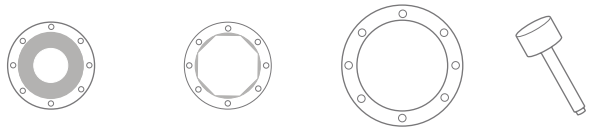

Reduced bore DN40 to 600	Virtual full bore DN40 to 200	Full bore DN250 to 2400	Probe 300 to 1000 mm

External pressure transducer (option)

Up to 20 and 40 bar absolute

Backward compatibility (option)

- Full compatibility with legacy AquaMaster remote sensors. Plugs directly into AquaMaster4 with no specific configuration required.

MID/Tamper detection (option)

- Switch selectable inside the tamper-evident, seal-protected enclosure
- Prevents changes to meter configuration that affect the meter/output accuracy

...Specification – transmitter

Dimensions

Dimensions in mm (in)

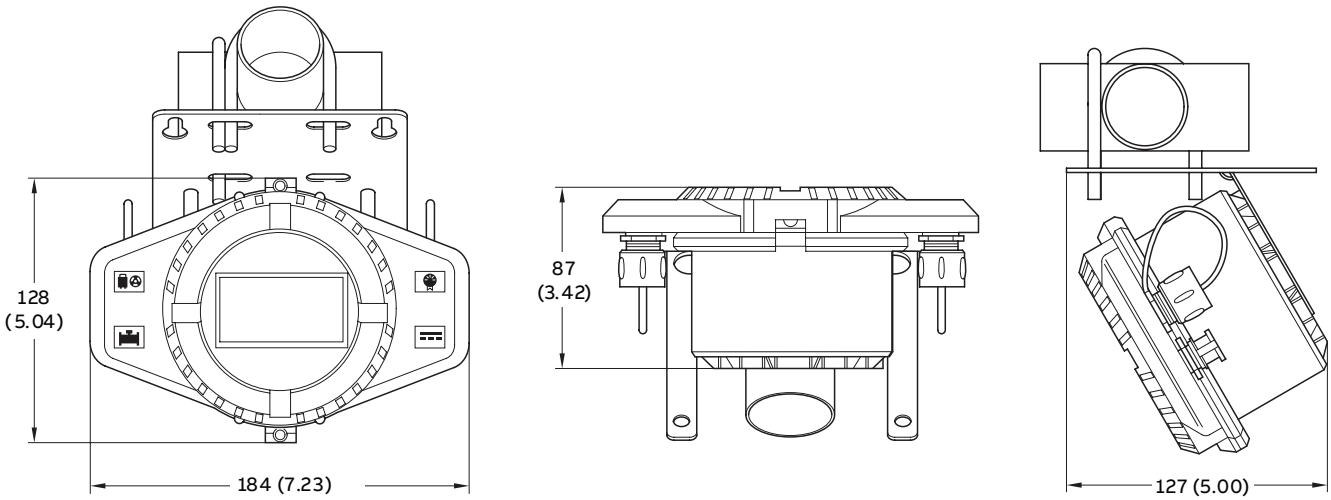

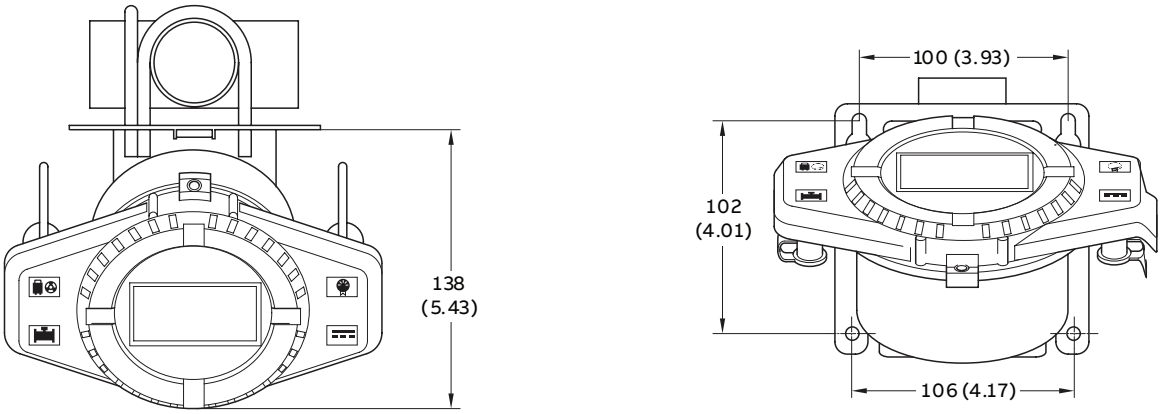

Wall-/Pipe-mount remote transmitter

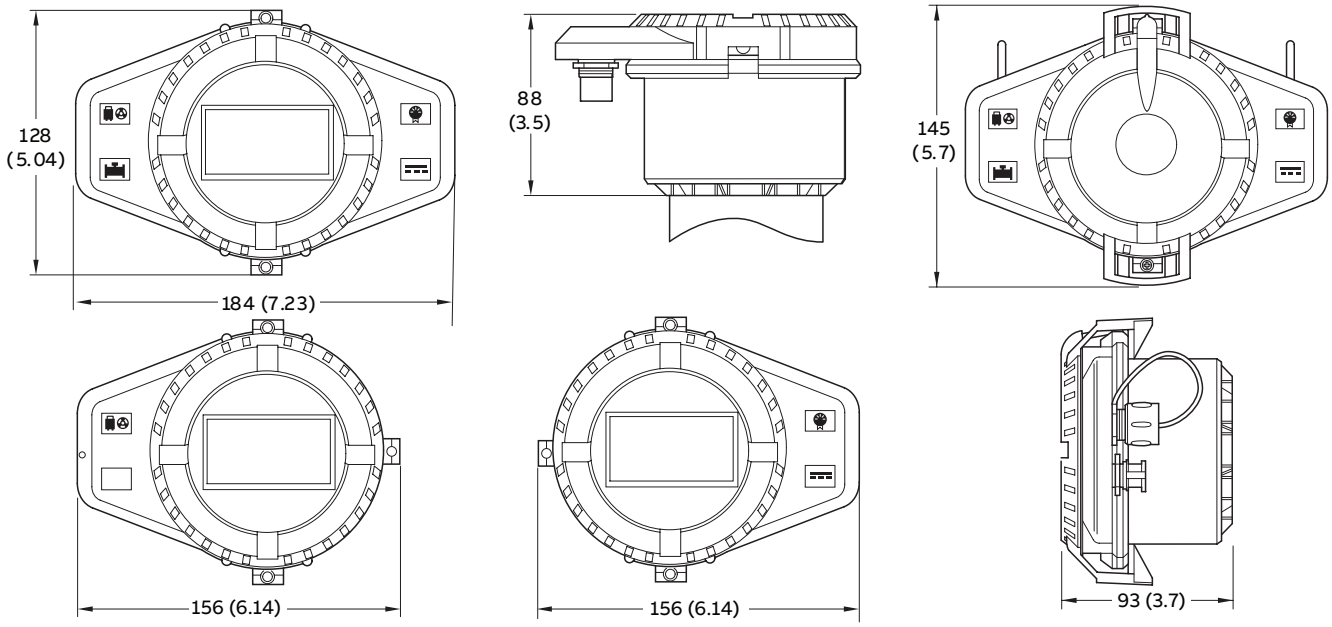

Integral transmitter

Transmitter with NFC aerial cover

Specification – reduced bore sensor

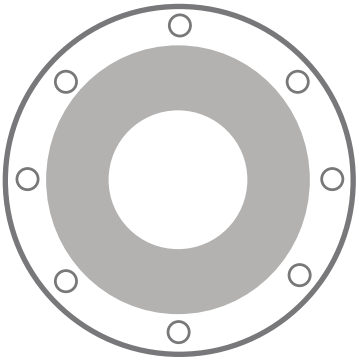

Measurement accuracy

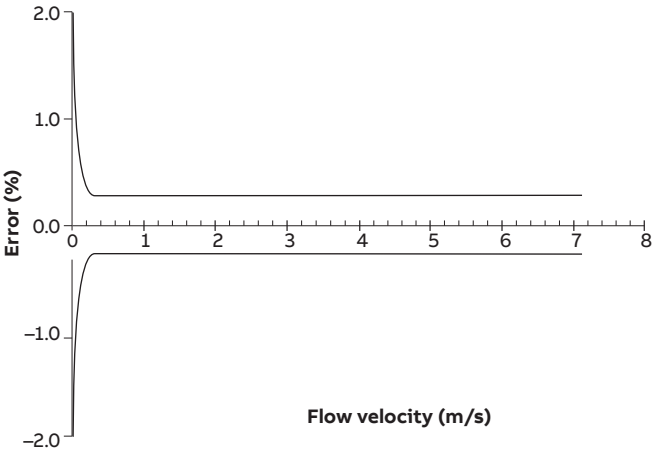

	Mains powered		Battery/Renewable energy powered	
DN	Class 2 ±0.5 or ±0.4 %	Class 1 ±0.2 %	Class 2 ±0.5 or ±0.4 %	Class 1 ±0.2 %
40 to 600	±1 mm/s *	±0.5 mm/s *	±2 mm/s *	±1 mm/s *

* Whichever is the greater

Metrological performance to OIML R49 (pending)

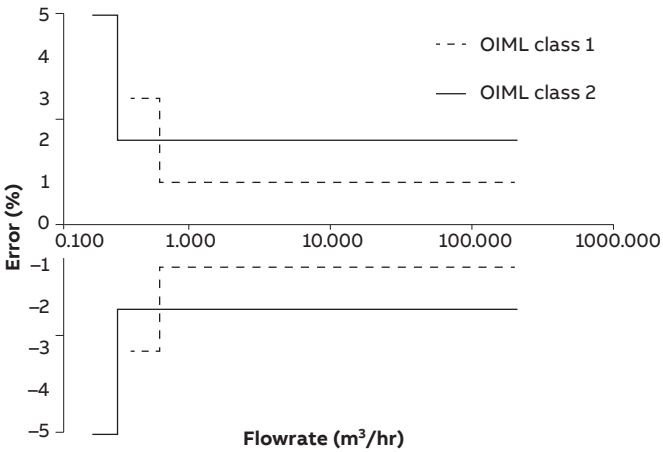

			Mains powered		Battery/Renewable energy powered	
			Class 2 (R = 1000)	Class 1 (R = 500)	Class 2 (R = 400)	Class 1 (R = 160)
DN	in	Q3 (m^3/h)	Q1 (m^3/h)	Q1 (m^3/h)	Q1 (m^3/h)	Q1 (m^3/h)
40	1½	25	0.03	0.05	0.06	0.16
50	2	40	0.04	0.08	0.10	0.25
65	2½	63	0.06	0.13	0.16	0.39
80	3	100	0.10	0.20	0.25	0.63
100	4	160	0.16	0.32	0.40	1
125	5	160	0.16	0.32	0.40	1
150	6	400	0.40	0.80	1	2.50
200	8	630	0.63	1.26	1.58	3.94
250	10	1000	1	2	2.50	6.25
300	12	1600	1.60	3.20	4	10
350	14	1600	1.60	3.20	4	10
400	16	2500	2.50	5	6.25	15.63
450	18	2500	2.50	5	6.25	15.63
500	20	4000	4	8	10	25
600	24	6300	6.30	12.60	15.75	39.38

Q2 = 1.6 * Q1
Q4 = 1.25 * Q3
DN40 to 300 approved for MID MI-001 for battery/renewable powered with Q3/Q1 (R) = 160

			Mains powered		Battery/Renewable energy powered	
			Class 2 (R = 1000)	Class 1 (R = 500)	Class 2 (R = 400)	Class 1 (R = 160)
DN	in	Q3 (US gal/min)	Q1 (US gal/min)	Q1 (US gal/min)	Q1 (US gal/min)	Q1 (US gal/min)
40	1½	110	0.11	0.22	0.28	0.69
50	2	176	0.18	0.35	0.44	1.10
65	2½	277	0.28	0.55	0.69	1.73
80	3	440	0.44	0.88	1.10	2.75
100	4	704	0.70	1	1.76	4.40
125	5	704	0.70	1	1.76	4.40
150	6	1761	1.76	3.52	4.40	11
200	8	2774	3	6	6.93	17.34
250	10	4403	4.40	8.81	11	27.52
300	12	7045	7	14	17.61	44
350	14	7045	7	14	17.61	44
400	16	11007	11	22	27.52	68.79
450	18	11007	11	22	27.52	68.79
500	20	17611	17.61	35.22	44	110
600	24	27738	28	55	69	173

Q2 = 1.6 * Q1
Q4 = 1.25 * Q3
DN40 to 300 approved for MID MI-001 for battery-/renewable-powered with Q3/Q1 (R) = 160 (Class 1) and Q3/Q1 (R) = 250 (Class 2)

Size	UL low flow GPM	UL high flow GPM	Pressure drop (psi)
2	6	235	≤ 10
2½	6.5	280	≤ 9
3	6	465	≤ 7
4	10	630	≤ 6
6	20	1780	≤ 4
8	20	3345	≤ 8
10	45	4450	≤ 6
12	85	5245	≤ 2

...Specification – reduced bore sensor

Bore sizes and flange types

Bore size range

DN40 to 600

Flanges to standards

ASME
AWWA
ISO 7005 EN1092-1
DIN
AS4087
AS2129
JIS

Pressure limitations for flanges

As per flange rating

Pressure equipment directive 97/23/EC

This product is applicable in networks for the supply, distribution and discharge of water and associated equipment and is therefore exempt.

Bore and flange material

- DN40 to 300: SG iron
- DN350 to 600: carbon steel
- All sizes coated with light gray 2-pack epoxy (RAL9002)
- Primer: Interpon PZ660 zinc-based system, 70 microns thick
- Top coat: Interpon 610 light gray polyester powder coating (RAL 9002), up to 150 microns thick, comparable to EN ISO 12944 grade C4
- As a special requirements: 2-pack epoxy primer/finish @ 300 µm DFT

Terminal box for remote sensors

Polycarbonate

Environmental and process conditions

Ingress rating

- IP68 (NEMA 6P) to 10 m (33 ft)
- For buriable applications: 1 m < sensor depth ≤ 5 m

Temperature ranges

Ambient: –20 to 70 °C (–4 to 158°F)
Process: –6 to 70 °C (21 to 158 °F)

Conductivity

>20 µS/cm

Upstream and downstream pipe conditions

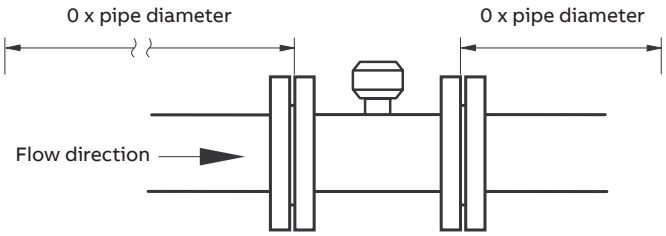

Pressure loss

Flow rate	Pressure loss in bar (psi)
Q_3	<0.63 (9.1)
Q_3 /2	<0.16 (2.3)

Reduced bore sensor pressure drop (typical)

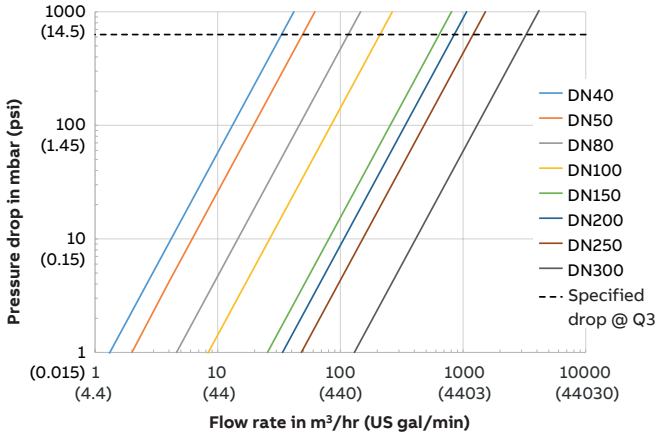

Potable water approvals for wetted parts

WRAS
ACS
DVGW W270
NSF – 61
AZ/NZ 4020

Metrological certifications (pending)

- OIML R49 for accuracy class 1 and 2 and environmental class T50 0.1 to 50 °C (32.18 to 122 °F)
- MID MI-001
- NMI R49 and NMI 10 for Australia
- PAC for China

Specification – full bore sensor

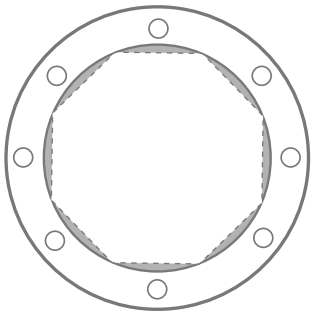

DN40 to 200

Virtual full bore, polypropylene liner

DN250 to 2400

Full bore, elastomer or hard rubber liner

Measurement accuracy

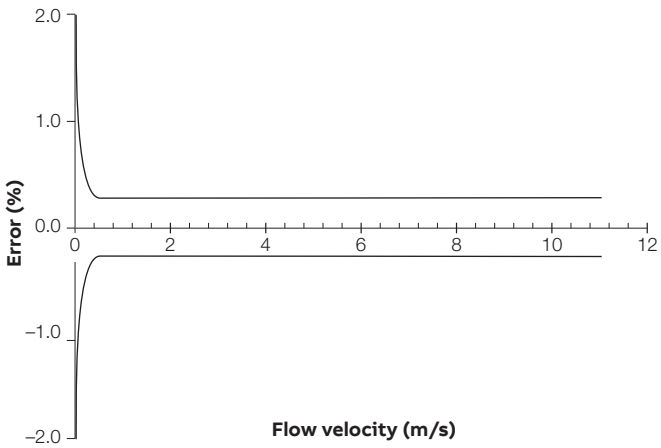

	Mains powered		Battery/Renewable energy powered	
DN	**Class 2** ±0.5 or ±0.4 %	**Class 1** ±0.2 %	**Class 2** ±0.5 or ±0.4 %	**Class 1** ±0.2 %
40 to 600	±2 mm/s *	±1 mm/s *	±4 mm/s *	±2 mm/s *
700 to 2400	±4 mm/s *	±2 mm/s *	±6 mm/s *	±3 mm/s *

* whichever is the greater

Metrological performance to OIML R49 (pending)

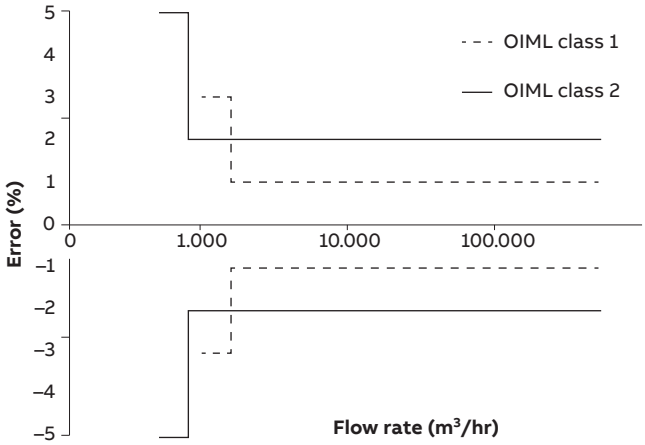

			Mains powered		Battery/Renewable energy powered	
			Class 2 (R = 500)	**Class 1 (R = 250)**	**Class 2 (R = 250)**	**Class 1 (R = 125)**
DN	**in**	**Q3 (m^3/h)**	**Q1 (m^3/h)**	**Q1 (m^3/h)**	**Q1 (m^3/h)**	**Q1 (m^3/h)**
40	1½	40	0.08	0.16	0.16	0.32
50	2	63	0.13	0.25	0.25	0.50
65	2½	100	0.20	0.40	0.40	0.80
80	3	160	0.32	0.64	0.64	1.28
100	4	250	0.50	1	1	2
125	5	250	0.80	1	1.60	3.20
150	6	630	1.26	2.52	2.52	5.04
200	8	1000	2	4	4	8
250	10	1600	3.20	6.40	6.40	12.80
300	12	2500	5	10	10	20
350	14	4000	8	16	16	32
400	16	4000	8	16	16	32
450	18	6300	12.60	25.20	25.20	50.40
500	20	6300	12.60	25.20	25.20	50.40
600	24	10000	20	40	40	80
			Class 2 (R = 315)	**Class 1 (R = 160)**	**Class 2 (R = 160)**	**Class 1 (R = 80)**
700	28	16000	50.79	100	100	200
760	30	16000	50.79	100	100	200
800	32	16000	50.79	100	100	200
900	36	25000	79.37	156.20	156.25	312
1000	40	25000	79.37	156.20	156.25	312
1050	42	25000	79.37	156.20	156.25	312
1100	44	40000	126.98	250	250	500
1200	48	40000	126.98	250	250	500
1400	54	63000	200.00	393.70	393.75	787
1500	56	63000	200.00	393.70	393.75	787
1600	60	63000	200.00	393.70	393.75	787
1800	64	100000	317.46	625	625	1250
2000	66	100000	317.46	625	625	1250
2200	72	160000	507.94	1000	1000	2000
2400	78	160000	507.94	1000	1000	2000

Q2 = 1.6 * Q1
Q4 = 1.25 * Q3

...Specification – full bore sensor

...Metrological performance to OIML R49 (pending)

			Mains powered		Battery/Renewable energy powered	
			Class 2 (R = 500)	Class 1 (R = 250)	Class 2 (R = 250)	Class 1 (R = 125)
DN	in	Q3 (US gal/min)	Q1 (US gal/min)	Q1 (US gal/min)	Q1 (US gal/min)	Q1 (US gal/min)
40	1½	176	0.35	0.70	0.55	1.10
50	2	277	0.55	1.11	0.70	1.41
65	2½	440	0.88	1.76	1.11	2.22
80	3	704	1.41	2.82	1.76	3.52
100	4	1101	2.20	4	2.82	5.64
125	5	1761	3.52	4	4.40	8.81
150	6	2774	5.55	11.10	7.04	14.09
200	8	4403	9	18	11.10	22.19
250	10	7045	14.09	28.18	17.61	35.22
300	12	11007	22	44	28.18	56.36
350	14	17611	35	70	44.03	88.06
400	16	17611	35	70	70.45	141
450	18	27738	55.48	110.95	70.45	141
500	20	27738	55.48	110.95	111	222
600	24	44029	88	176	111	222
			Class 2 (R = 315)	Class 1 (R = 160)	Class 2 (R = 160)	Class 1 (R = 80)
700	28	70446	224	440	176	352
760	30	70446	224	440	440	881
800	32	70446	224	440	440	881
900	36	110072	349	688	440	881
1000	40	110072	349	688	688	1374
1050	42	110072	349	688	688	1374
1100	44	176115	559	1101	688	1374
1200	48	277381	881	1733	1101	2201
1400	54	277381	881	1733	1734	3465
1500	56	277381	881	1733	1734	3465
1600	60	440287	1398	2752	1734	3465
1800	64	440287	1398	2752	2752	5504
2000	66	704459	2236	4403	2752	5504
2200	72	704459	2236	4403	4403	8806
2400	78	160000	507.94	1000	1000	2000

Q2 = 1.6 * Q1
Q4 = 1.25 * Q3

Bore sizes and flange types

Bore size range

DN40 to 2400

Flanges to standards

ASME
AWWA
ISO 7005 EN1092-1
DIN
AS4087
AS2129
JIS

Pressure limitations for flanges

As per flange rating
PN25 max. process temperature 50 °C (122 °F)
PN40 max. process temperature 40 °C (104 °F)

Pressure equipment directive 97/23/EC

This product is applicable in networks for the supply, distribution and discharge of water and associated equipment and is therefore exempt.

Bore and flange material

- DN40 to 300: SG iron
- DN350 to 2400: carbon steel
- All sizes coated with light gray 2-pack epoxy (RAL9002)
- Primer: Interpon PZ660 zinc-based system, 70 microns thick
- Top coat: Interpon 610 light gray polyester powder coating (RAL 9002), up to 150 microns thick, comparable to EN ISO 12944 grade C4
- As a special requirements: 2-pack epoxy primer/finish @ 300 µm DFT

Terminal box for remote sensors

Polycarbonate

Environmental and process conditions

Ingress rating

- IP68 (NEMA 6P) to 10 m (33 ft)
- For buriable applications (DN40 to 200, virtual full bore, polypropylene liner and DN450 to 2400, full bore, rubber liner): 1 m < sensor depth ≤ 5 m

Temperature ranges

Ambient: –20 to 70 °C (–4 to 158°F)

		Process temperature	
Liner material	**Bore size**	**Minimum**	**Maximum**
Polypropylene	DN40 to 200	–6 °C (21 °F)	70 °C (158 °F)
Elastomer	DN250 to 600	–5 °C (23 °F)	50 °C (122 °F)
Hard rubber	DN250 to 2400	–10 °C (14 °F)	80 °C (176 °F)

Conductivity

>20 µS/cm

Upstream and downstream pipe conditions (virtual full bore DN40 to 200)

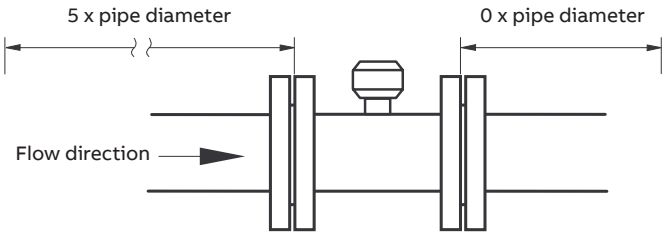

Upstream and downstream pipe conditions (full bore DN250 to 2400)

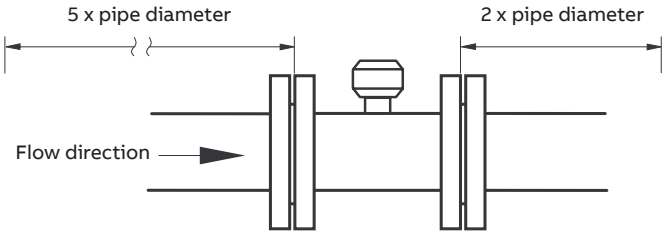

Pressure loss

Flow rate	Pressure loss in bar (psi)
Q_3	<0.25 bar (3.6 psi) for virtual full bore sensors
Q_3	Negligible for full bore sensors

Virtual full bore sensor pressure drop (typical)

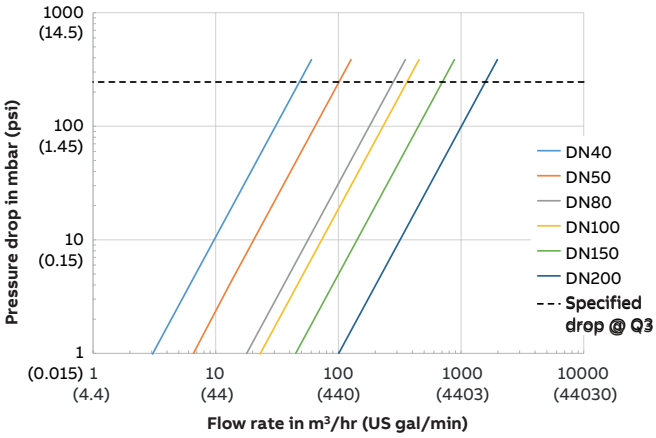

Potable water approvals for wetted parts

WRAS
ACS
DVGW W270
NSF – 61
AZ/NZ 4020

Metrological certifications (pending)

- OIML R49 for accuracy class 1 and 2 and environmental class T50 0.1 to 50 °C (32.18 to 122 °F)
- MID MI-001
- NMI R49 and NMI 10 for Australia
- PAC for China

Specification – insertion flowmeter

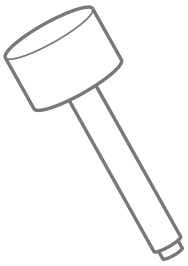

Mounting

Integral transmitter
On probe sensor

Remote transmitter
Off probe sensor

Insertion details

Size range
300 to 1000 mm (12 to 40 in)

Pipe sizes
200 to 8000 mm (8 to 320 in) nominal bore

Pressure limitations
20 bar (295 psi) absolute

Pressure equipment directive 97/23/EC
This product is applicable in networks for the supply, distribution and discharge of water and associated equipment and is therefore exempt.

Sensor body material
316L stainless steel

Sensor tip material
PEEK

Terminal box material for remote sensors
Polycarbonate

Threaded connection
1 in BSP
1 in NPT
1½ in BSP

Pressure tapping provision
⅛ in BSP

Environmental and process conditions

Ingress rating
IP68 (NEMA 6P) to 10 m (33 ft)

Temperature ranges
Ambient: –20 to 60 °C (–4 to 140 °F)
Process: 0 to 60 °C (32 to 140 °F)

Conductivity
>50 µS/cm

Metrological performance and certifications

Velocity accuracy
±2 % of rate or ±2 mm/s (±0.08 in/s)
whichever is the greater

Volume accuracy
Refer to ISO 7145-1982 (BS 1042 section 2.2) for details

Flow condition
Fully developed profile in accordance with ISO 7145-1982 (BS1042 section 2.2.)

Maximum flow
The maximum velocity depends upon the actual insertion length. Typical insertion lengths are 0.125 and 0.5 x pipe diameter. Figure 2 is a guide* to the maximum allowable velocity for different insertion lengths.

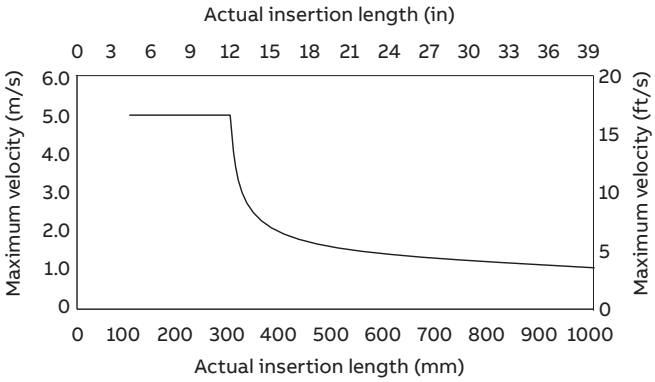

Figure 2 Maximum allowable velocity for different insertion lengths

Potable water approvals for wetted parts
WRAS

* Figure 2 is intended as a guide only. Factors that influence the maximum insertion length into the pipe include: flow sensor mounting components (for example, standoffs, bushes and valves) pipeline vibration, fluid vibration and pump noise.

Specification – pressure transducer (option)

Ingress protection

IP68 to 10 m (33 ft)

Wetted parts

303L stainless steel, Viton® and 96 % alumina

Process temperature range

–10 to 50 °C (14 to 122 °F) (protect transducer from frost)

Ambient temperature range

–20 to 70 °C (–4 to 158 °F)

Pressure range (specify when ordering)

20 and 40 bar absolute

Accuracy (typical)

- < ±0.1 % of span + thermal errors
- Thermal zero shift < 0.01 % span/°C
- Thermal span shift < ±0.015 %/°C

Dimensions

Dimensions in mm (in)

All dimensions nominal

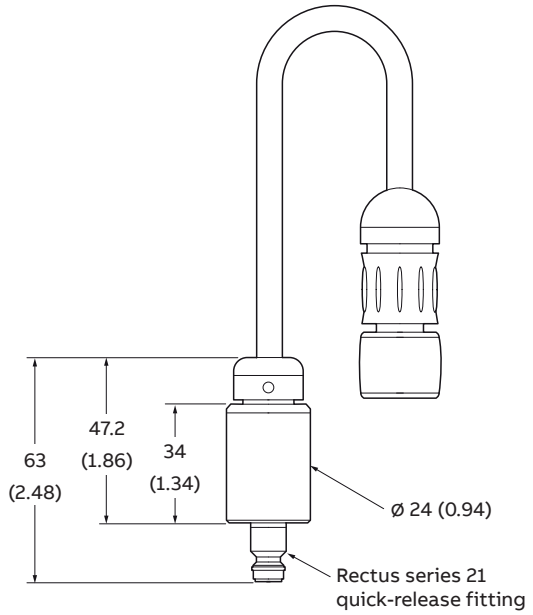

20 bar transducer

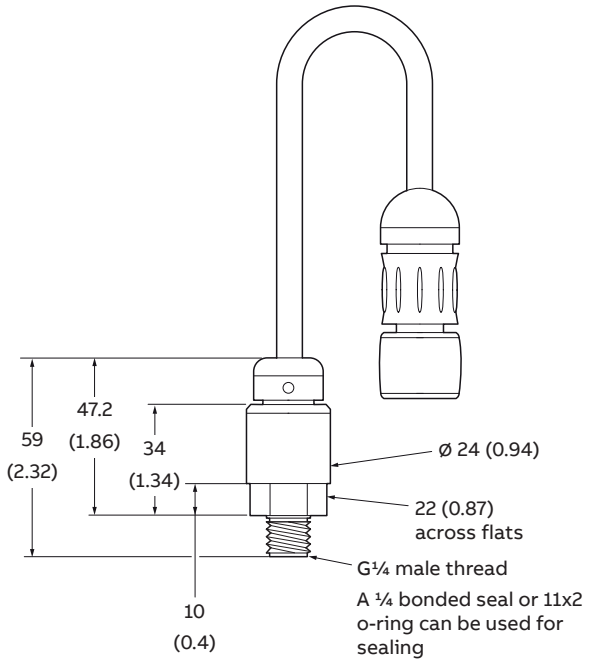

40 bar transducer

Dimensions – sensors

R-style sensor – DN40 to 300 (1½ to 12 in)

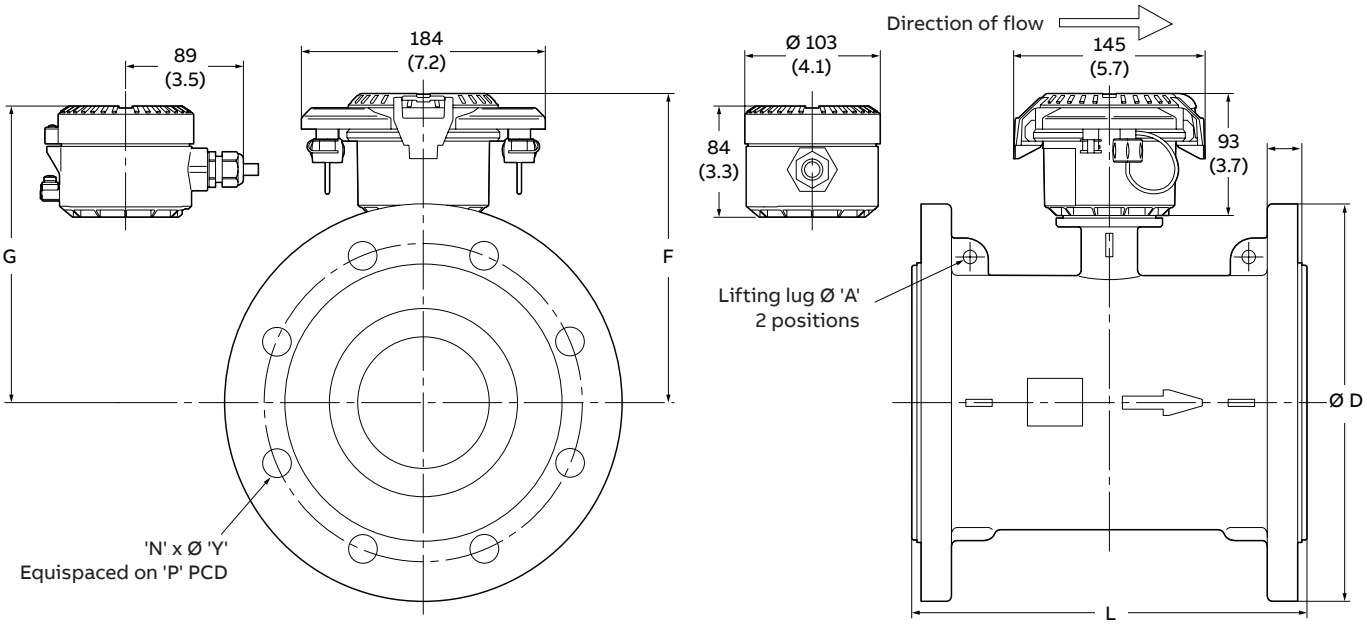

Figure 3 R-style sensor – DN40 to 300 (1½ to 12 in)

Sensor size	Flange Standard	Flange Class	Dimensions in mm (in) Flange OD D	No. holes N	Bolt hole dia Y	Bolt hole PCD P	Sensor length L	Trans. height F	T. Box height G	Lifting lug A	Approx weight kg (lbs) INT	Approx weight kg (lbs) REM
DN40 (1½ in)	EN 1092	PN 10, 16, 25	150 (5.9)	4	19 (.75)	110 (4.3)	200 (7.9)	158 (6.2)	149 (5.9)	N/A	13 (29)	12 (27)
	ASME B16.5	CL150			15.7 (.62)	98 (3.9)						
	AS 2129	Table E	135 (5.3)		14 (.55)			154 (6.1)	144 (5.7)		11 (24)	8 (18)
	JIS B2220	5K	120 (4.7)		15 (.59)	95 (3.7)						
		10K	140 (5.5)		19 (.75)	105 (4.2)						
DN50 (2 in)	EN 1092	PN 10, 16, 25	165 (6.5)	4	19 (.75)	125 (4.9)	200 (7.9)	162 (6.4)	153 (6.0)	N/A	15 (32)	14 (30)
	ASME B16.5	CL150				121 (4.8)						
	AS 2129	Table E	150 (5.9)		18 (.71)	114 (4.5)			152 (6.0)		12 (26)	9 (20)
	AS 4087	PN 16										
	JIS B2220	5K	130 (5.1)		15 (.59)	105 (4.1)						
		10K	155 (6.1)		19 (.75)	120 (4.7)						
DN65 (2½ in)	EN 1092	PN 10, 16	185 (7.3)	4	19 (.75)	145 (5.7)	200 (7.9)	176 (6.9)	167 (6.6)	N/A	19 (42)	18 (40)
		PN 25		8								
	ASME B16.5	CL150		4	20 (.79)	140 (5.5)						
	AS 2129	Table E	165 (6.5)		18 (.71)	127 (5.0)		168 (6.6)	158 (6.2)		14 (31)	11 (24)
	AS 4087	PN 16										
	JIS B2220	5K	155 (6.1)		15 (.59)	130 (5.1)						
		10K	175 (6.9)		19 (.75)	140 (5.5)						
DN80 (3 in)	EN 1092	PN 10, 16, 25	200 (7.9)	8	19 (.75)	160 (6.3)	200 (7.9)	181 (7.1)	172 (6.8)	N/A	21 (47)	20 (44)
	ASME B16.5	CL150		4	20 (.79)	152 (6.0)						
	AS 2129	Table E	185 (7.3)		18 (.71)	146 (5.8)		174 (6.9)	165 (6.5)		17 (37)	14 (31)
	AS 4087	PN 16										
	JIS B2220	5K	180 (7.1)		19 (.75)	145 (5.7)						
		10K	185 (7.3)	8		150 (5.9)						

Table 1 R-style sensor – DN40 to 80 (1½ to 3 in)

Sensor size	Flange Standard	Flange Class	Dimensions in mm (in) Flange OD D	No. holes N	Bolt hole dia Y	Bolt hole PCD P	Sensor length L	Trans. height F	T. Box height G	Lifting lug A	Approx weight kg (lbs) INT	Approx weight kg (lbs) REM
DN100 (4 in)	EN 1092	PN 10, 16	235 (9.3)	8	19 (.75)	180 (7.1)	250 (9.9)	202 (8.0)	193 (7.6)	N/A	27 (60)	26 (58)
		PN 25			23 (.91)	190 (7.5)						
	ASME B16.5	CL150			19 (.75)	191 (7.5)						
	AS 2129	Table E	215 (8.5)		18 (.71)	178 (7.0)		212 (8.3)	203 (8.0)		23 (51)	20 (44)
	AS 4087	PN 16		4								
	JIS B2220	5K	200 (7.9)	8	19 (.75)	165 (6.5)						
		7.5K	238 (9.4)	4		195 (7.7)						
		10K	210 (8.3)	8		175 (6.9)						
DN125 (5 in)	EN 1092	PN 10, 16	270 (10.6)	8	18 (.71)	210 (8.3)	250 (9.9)	221 (8.7)	212 (8.3)	N/A	30 (66)	29 (64)
		PN 25			28 (1.10)	220 (8.7)						
	ASME B16.5	CL150			22 (.87)	216 (8.5)						
	AS 2129	Table E	255 (10.0)		18 (.71)	210 (8.3)		212 (8.3)	203 (8.0)		26 (57)	23 (51)
	JIS B2220	5K	235 (9.3)		19 (.75)	200 (7.9)						
		10K	250 (9.8)		23 (.91)	210 (8.3)						
DN150 (6 in)	EN 1092	PN 10, 16	300 (11.8)	8	23 (.91)	240 (9.5)	300 (11.8)	233 (9.2)	224 (8.8)	10,2 (.40)	35 (77)	34 (75)
	ASME B16.5	CL150			22 (.87)	242 (9.5)						
	EN 1092	PN 25			26 (1.02)	250 (9.8)			223 (8.8)		33 (73)	31 (68)
	AS 2129	Table E	280 (11.0)		22 (.87)	235 (9.3)						
	AS 4087	PN 16			18 (.71)							
	JIS B2220	5K	265 (10.4)		19 (.75)	230 (9.1)						
		7.5K	290 (11.4)	6		247 (9.7)						
		10K	280 (11.0)	8	23 (.91)	240 (9.5)						
DN200 (8 in)	EN 1092	PN 10	343 (13.5)	8	23 (.91)	295 (11.6)	350 (13.8)	259 (10.2)	250 (9.8)	10,2 (.40)	68 (150)	67 (147)
		PN 16		12								
		PN 25	360 (14.2)		28 (1.10)	310 (12.2)						
	ASME B16.5	CL150	343 (13.5)	8	22 (.87)	298 (11.7)						
	AS 2129	Table E	335 (13.2)			292 (11.5)		258 (10.2)			51 (112)	48 (106)
	AS 4087	PN 16			18 (.71)							
	JIS B2220	5K	320 (12.6)		23 (.91)	280 (11.0)						
		7.5K	342 (8.7)		19 (.75)	299 (11.8)						
		10K	330 (13.0)	12	23 (.91)	290 (11.4)						
DN250 (10 in)	EN 1092	PN10	395 (15.6)	12	22 (.87)	350 (.87)	450 (17.7)	285 (11.2)	276 (10.9)	10,2 (.40)	78 (172)	75 (165)
		PN16	405 (15.9)		26 (1.02)	355 (14.0)						
		PN25	425 (16.7)		30 (1.18)	370 (14.6)						
	AS 2129	Table E	405 (15.9)		22 (.87)	356 (14.0)						
	AS 4087	PN 16		8								
	JIS B2220	5K	385 (15.2)	12	23 (.91)	345 (13.6)						
		7.5K	410 (16.1)	8		360 (14.2)						
		10K	400 (15.8)	12	25 (.98)	355 (14.0)						
	ASME B16.5	CL150	406 (16.0)	12	22 (.87)	362 (14.3)						
DN300 (12 in)	EN 1092	PN10	445 (17.5)	12	22 (.87)	400 (15.8)	500 (19.7)	310 (12.2)	301 (11.9)	10,2 (.40)	115 (253)	112 (247)
		PN16	460 (18.1)		26 (1.02)	410 (16.1)						
		PN25	485 (19.1)	16	30 (1.18)	430 (16.9)						
	AS 2129	Table E	455 (17.9)	12	26 (1.02)	406 (16.0)						
	AS 4087	PN 16			22 (.87)							
	JIS B2220	5K	430 (16.9)	12	23 (.91)	390 (15.4)						
		7.5K	464 (18.3)	10		414 (16.3)						
		10K	445 (17.5)	16	25 (.98)	400 (15.8)						
	ASME B16.5	CL150	483 (19.0)	12	22 (.87)	432 (17.0)						

Table 2 R-style sensor – DN100 to 300 (4 to 12 in)

...Dimensions – sensors

R-style sensor – DN350 to 600 (14 to 24 in)

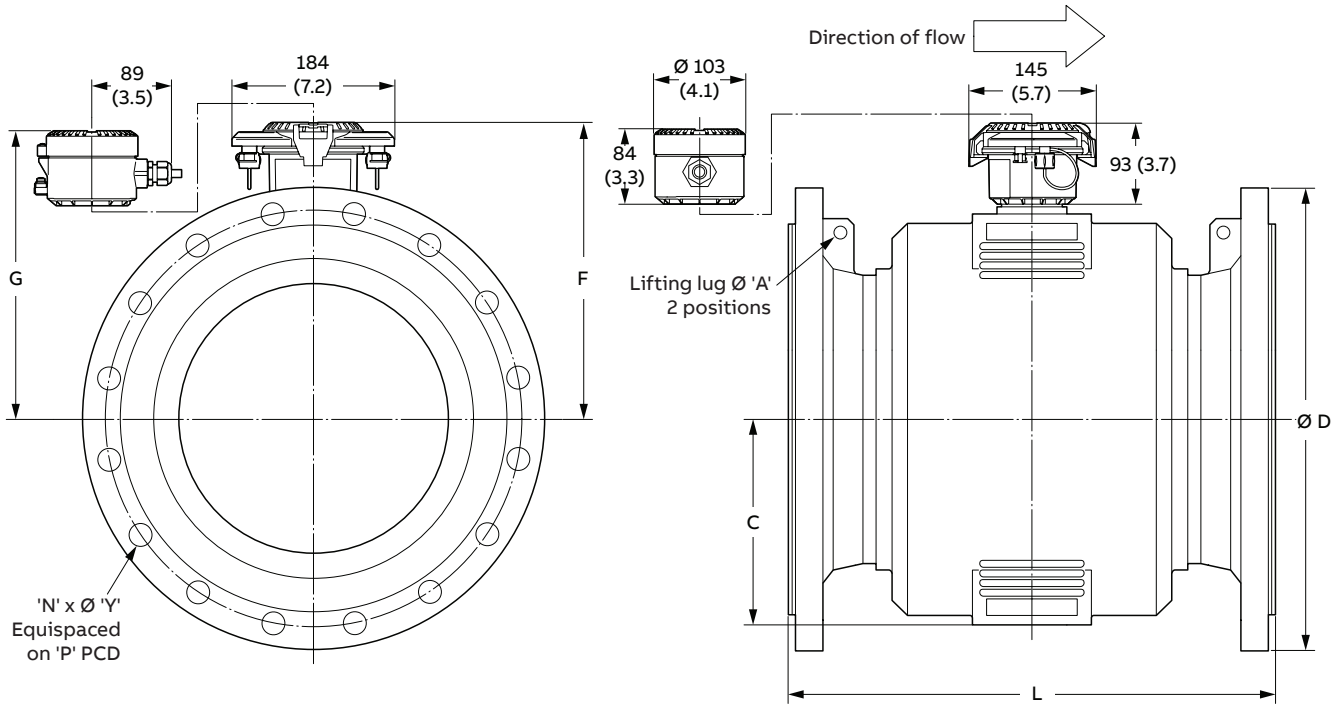

Figure 4 R-style sensor – DN350 to 600 (14 to 24 in)

Sensor size	Flange Standard	Flange Class	Flange OD D	No. Holes N	Bolt hole dia Y	Bolt hole PCD P	Sensor length L	Trans height F	T. Box height G	Lifting lug A	Cover flat C	Approx weight kg (lbs) INT	Approx weight kg (lbs) REM
			Dimensions in mm (in)										
DN350 (14 in)	EN 1092	PN 10	505 (19.9)	16	22 (.87)	460 (18.1)	550 (21.7)	334 (13.2)	324 (12.8)	14,5 (.57)	231 (9.1)	102 (225)	100 (220)
		PN 16	520 (20.5)		26 (1.02)	470 (18.5)							
		PN 25	555 (21.9)		33 (1.30)	490 (19.3)							
	ASME B16.5	CL150	535 (21.1)	12	29,5 (1.16)	476 (18.8)							
	AS 2129	Table E	525 (20.7)		26 (1.02)	470 (18.5)							
	AS 4087	PN 16											
	JIS B2220	5K	480 (18.9)		25 (.98)	435 (17.1)							
		7.5K	530 (20.7)	10		472 (18.6)							
		10K	490 (19.3)	16		445 (17.5)							
DN400 (16 in)	EN 1092	PN 10	565 (22.3)	16	26 (1.02)	515 (20.3)	600 (23.6)	360 (14.2)	354 (13.9)	14,5 (.57)	257 (10.1)	117 (258)	115 (254)
		PN 16	580 (22.8)		30 (1.18)	525 (20.7)							
		PN 25	620 (24.4)		36 (1.42)	550 (21.7)							
	ASME B16.5	CL150	600 (23.6)		29,5 (1.16)	540 (21.3)							
	AS 2129	Table E	580 (22.8)	12	26 (1.02)	521 (20.5)							
	AS 4087	PN 16											
	JIS B2220	5K	540 (21.3)	16	25 (.98)	495 (19.5)							
		7.5K	582 (22.9)	12		524 (20.6)							
		10K	560 (22.1)	16	27 (1.06)	510 (20.1)							
DN450 (18 in)	EN 1092	PN 10	615 (24.2)	20	26 (1.02)	565 (22.3)	700 (27.6)	388 (15.3)	379 (14.9)	14,5 (.57)	285 (11.2)	162 (357)	160 (353)
		PN 16	640 (25.2)		30 (1.18)	585 (23.0)							
		PN 25	670 (26.4)		36 (1.42)	600 (23.6)							
	ASME B16.5	CL150	635 (25.0)	16	32,5 (1.28)	578 (22.8)							
	AS 2129	Table E	640 (25.2)	16	26 (1.02)	584 (23.0)							
	AS 4087	PN 16		12									
	JIS B2220	5K	605 (23.8)	16	25 (.98)	555 (21.9)							
		7.5K	652 (25.7)	12	27 (1.06)	585 (23.0)							
		10K	620 (24.4)	20		565 (22.3)							
DN500 (20 in)	EN 1092	PN 10	670 (26.4)	20	26 (1.02)	620 (24.4)	770 (30.3)	419 (16.5)	410 (16.2)	14,5 (.57)	316 (12.5)	219 (483)	217 (477)
		PN 16	715 (28.2)		33 (1.30)	650 (25.6)							
		PN 25	730 (28.7)		36 (1.42)	660 (26.0)							
	ASME B16.5	CL150	700 (27.6)		32,5 (1.28)	635 (25.0)							
	AS 2129	Table E	705 (27.8)	16	26 (1.02)	641 (25.2)							
	AS 4087	PN 16											
	JIS B2220	5K	655 (25.8)	20	25 (.98)	605 (23.8)							
		7.5K	706 (27.8)	12	27 (1.06)	639 (25.2)							
		10K	675 (26.6)	20		620 (24.4)							
DN600 (24 in)	EN 1092	PN 10	780 (30.7)	20	30 (1.18)	725 (28.6)	920 (36.2)	446 (17.6)	437 (17.2)	14,5 (.57)	343 (13.5)	317 (699)	315 (695)
		PN 16	840 (33.1)		36 (1.42)	770 (30.3)							
		PN 25	845 (33.3)		39 (1.54)								
	ASME B16.5	CL150	815 (32.1)		35,5 (1.40)	749,5 (29.5)							
	AS 2129	Table E	825 (32.5)	16	33 (1.30)	756 (29.7)							
	AS 4087	PN 16			30 (1.18)								
	JIS B2220	5K	770 (30.3)	20	27 (1.06)	715 (28.2)							
		7.5K	810 (31.9)	16		743 (29.3)							
		10K	795 (31.3)	24	33 (1.30)	730 (28.7)							

Table 3 R-style sensor – DN350 to 600 (14 to 24 in)

...Dimensions – sensors

V-style sensor – DN40 to 200 (1½ to 8 in)

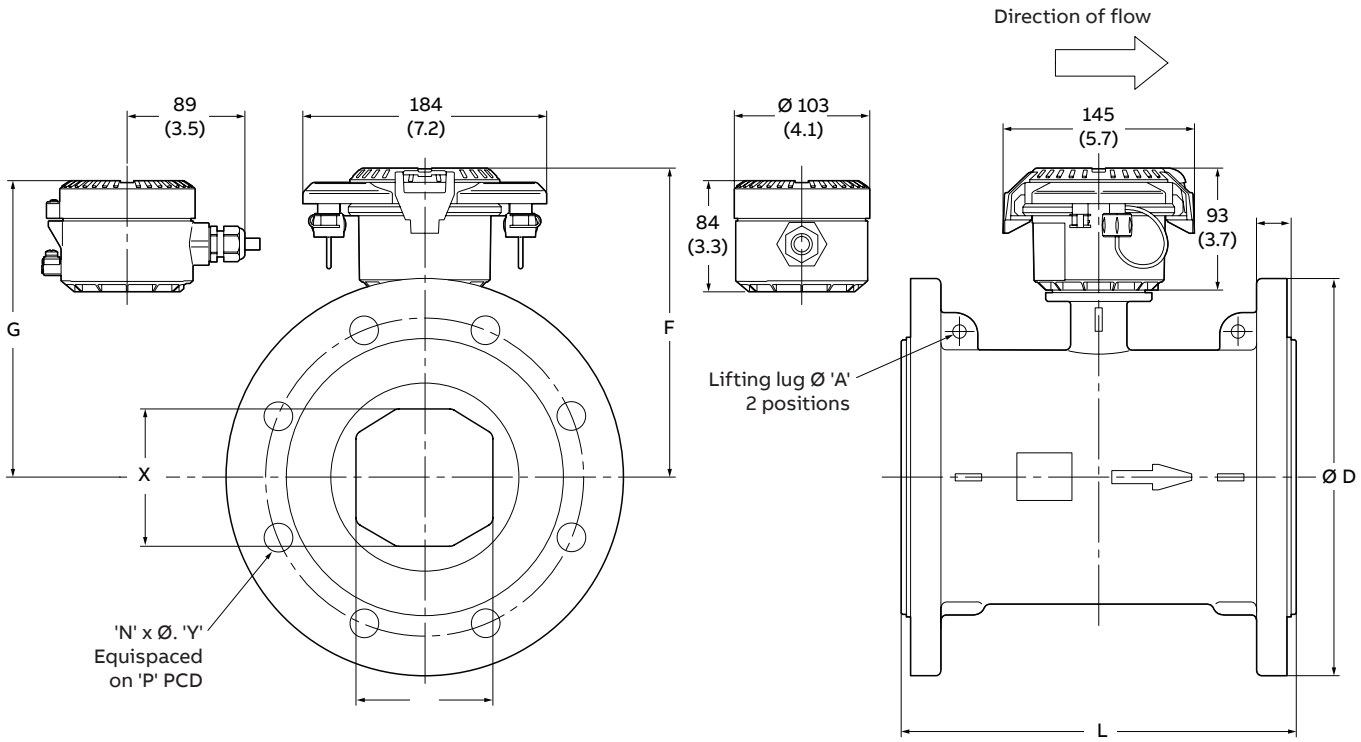

Figure 5 V-style sensor – DN40 to 200 (1½ to 8 in)

Sensor size	Flange		Dimensions in mm (in)								Approx weight kg (lbs)	
	Standard	Class	Flange OD	No. holes	Bolt hole dia.	Bolt hole PCD	Sensor length	Trans height	T. box height	Lifting lug		
			D	N	Y	P	L	F	G	A	INT	REM
DN40 (1½ in)	EN 1092	PN 10, 16, 25	150 (5.9)	4	19 (.75)	110 (4.3)	200 (7.9)	158 (6.2)	149 (5.9)	N/A	13 (29)	12 (27)
	ASME B16.5	CL150			15.7 (.62)	98 (3.9)						
	AS 2129	Table E	135 (5.3)		14 (.55)			154 (6.1)	144 (5.7)		10 (22)	7 (15)
	JIS B2220	10K	140 (5.5)		19 (.75)	105 (4.2)						
DN50 (2 in)	EN 1092	PN 10, 16, 25	165 (6.5)	4	19 (.75)	125 (4.9)	200 (7.9)	162 (6.4)	153 (6.0)	N/A	14 (31)	13 (29)
	ASME B16.5	CL150				121 (4.8)						
	AS 2129	Table E	150 (5.9)		18 (.71)	114 (4.5)					11 (24)	8 (18)
	AS 4087	PN 16										
	JIS B2220	10K	155 (6.1)		19 (.75)	120 (4.7)						
DN65 (2½ in)	EN 1092	PN 10, 16	185 (7.3)	4	19 (.75)	145 (5.7)	200 (7.9)	176 (6.9)	167 (6.6)	N/A	16 (35)	15 (33)
		PN 25		8								
	ASME B16.5	CL150		4	20 (.79)	140 (5.5)						
	AS 2129	Table E	165 (6.5)		18 (.71)	127 (5.0)		168 (6.6)	158 (6.2)		13 (29)	10 (22)
	AS 4087	PN 16										
	JIS B2220	10K	175 (6.9)		19 (.75)	140 (5.5)						
DN80 (3 in)	EN 1092	PN 10, 16, 25	200 (7.9)	8	19 (.75)	160 (6.3)	200 (7.9)	181 (7.1)	172 (6.8)	N/A	17 (38)	16 (36)
	ASME B16.5	CL150		4	20 (.79)	152 (6.0)						
	AS 2129	Table E	185 (7.3)		18 (.71)	146 (5.8)		174 (6.9)	165 (6.5)		16 (36)	13 (28)
	AS 4087	PN 16										
	JIS B2220	10K		8	19 (.75)	150 (5.9)						
DN100 (4 in)	EN 1092	PN 10, 16	235 (9.3)	8	19 (.75)	180 (.71)	250 (9.9)	202 (8.0)	193 (7.6)	N/A	19 (42)	18 (40)
		PN 25			23 (.91)	190 (7.5)						
	ASME B16.5	CL150			19 (.75)	191 (7.5)						
	AS 2129	Table E	215 (8.5)		18 (.71)	178 (7.0)		212 (8.3)	203 (8.0)			
	AS 4087	PN 16		4								
	JIS B2220	7.5K	238 (9.4)		19 (.75)	195 (7.7)						
		10K	210 (8.3)	8		175 (6.9)						
DN125 (5 in)	EN 1092	PN 10, 16	270 (10.6)	8	18 (.71)	210 (8.3)	250 (9.9)	221 (8.7)	212 (8.3)	N/A	30 (66)	29 (64)
		PN 25			28 (1.10)	220 (8.7)						
	ASME B16.5	CL150			22 (.87)	216 (8.5)						
	AS 2129	Table E	255 (10.0)		18 (.71)	210 (8.3)		212 (8.3)	203 (8.0)		24 (53)	21 (46)
	JIS B2220	10K	250 (9.8)		23 (.91)	201 (8.3)						
DN150 (6 in)	EN 1092	PN10, 16	300 (11.8)	8	23 (.91)	240 (9.5)	300 (11.8)	233 (9.2)	224 (8.8)	10,2 (.40)	35 (77)	34 (75)
	ASME B16.5	CL150			22 (.87)	242 (9.5)						
	EN 1092	PN 25			26 (1.02)	250 (9.8)		235 (9.3)	225 (8.9)		34 (75)	31 (68)
	AS 2129	Table E	280 (11.0)		22 (.87)	235 (9.3)						
	AS 4087	PN 16			18 (.71)							
	JIS B2220	7.5K	290 (11.4)	6	19 (.75)	247 (9.7)						
		10K	280 (11.0)	8	23 (.91)	240 (9.5)						
DN200 (8 in)	EN 1092	PN10	375 (11.8)	8	23 (.91)	295 (11.6)	350 (13.8)	259 (10.2)	250 (9.8)	10,2 (.40)	67 (147)	66 (145)
		PN16		12								
		PN 25	360 (14.2)		28 (1.10)	310 (12.2)						
	ASME B16.5	CL150	343 (13.5)	8	22 (.87)	298 (11.7)		258 (10.2)	250 (9.8)		53 (116)	50 (110)
	AS 2129	Table E	335 (13.2)			292 (11.5)						
	AS 4087	PN 16			18 (.71)							
	JIS B2220	7.5K	342 (8.7)		19 (.75)	299 (11.8)						
		10K	330 (13.0)	12	23 (.91)	290 (11.4)						

Table 4 V-style sensor – DN40 to 200 (1½ to 8 in)

...Dimensions – sensors

F-style sensor – DN250 to 400 (10 to 16 in)

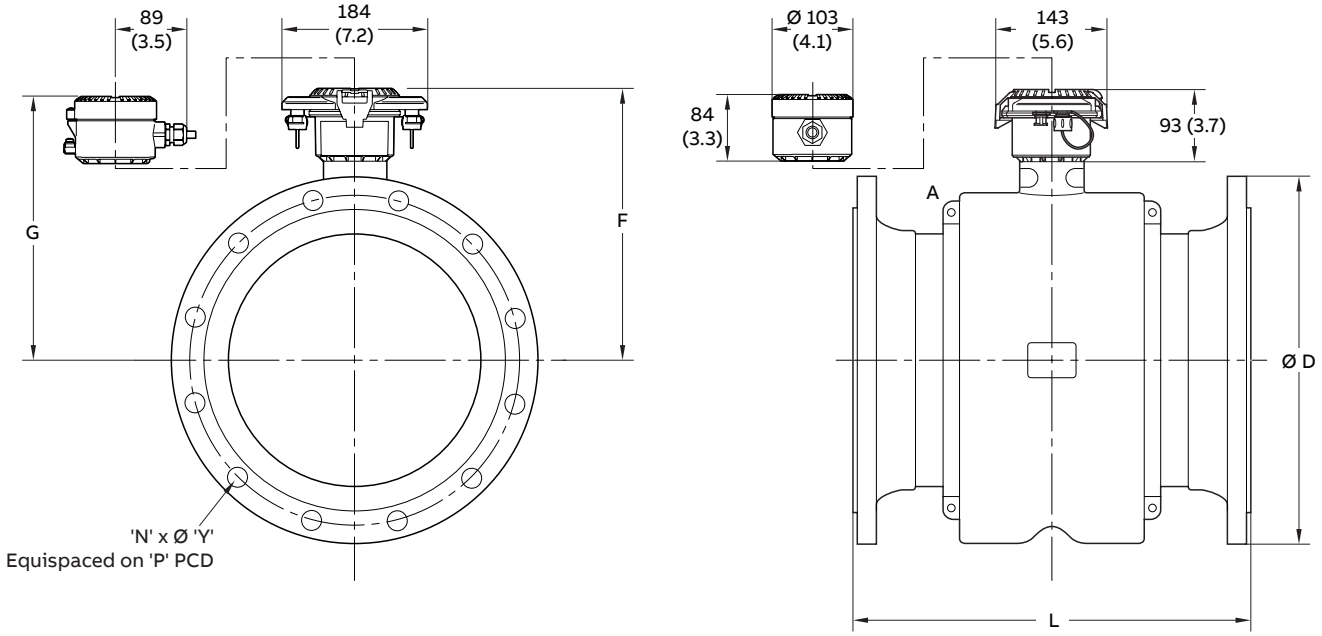

Figure 6 F-style sensor – DN250 to 400 (10 to 16 in)

Sensor size	Flange		Dimensional in mm [in]								Approx. weight kg (lbs)	
	Standard	Class	Flange OD	No. holes	Bolt hole dia.	Bolt hole PCD	Sensor length	Trans height	Tx box height	Lifting lug		
			D	N	Y	P	L	F	G	A	INT	REM
DN250 (10 in)	EN 1092 or DIN	PN10	395 (15.55)	12	22	350	450	319	310	N/A	61	59
		PN16	405 (15.94)	12	26	355					65	63
		PN25	425 (16.73)	12	30	370					84	82
		PN40	450 (17.72)	12	33	385					95	93
	AS4087	PN16	405 (15.94)	8	22	356					65	63
		PN35	430 (16.93)	12	26	381					95	93
	JIS B2220	5K	385 (15.16)	12	23	345					65	63
		10K	400 (15.75)	12	25	355						
	ASME B16.5	CL300	445 (17.52)	16	28.6	387.4					105	103
		CL150	405 (15.94)	12	26	362					70	68
DN300 (12 in)	EN 1092 or DIN	PN10	445 (17.52)	12	22	400	500	342	333	N/A	74	72
		PN16	460 (18.11)	12	26	410					80	78
		PN25	485 (19.09)	16	30	430					100	98
		PN40	515 (20.28)	16	33	450	600				130	128
	JIS B2220	5K	430 (16.93)	12	23	390	500				80	78
		10K	445 (17.52)	16	25	400						
	AS4087	PN16	455 (17.91)	12	22	406						
		PN35	490 (19.29)	26	26	438					130	128
	ASME B16.5	CL300	520 (20.47)	16	31.8	450.8					150	148
		CL150	485 (19.09)	12	26	431.8					105	103
DN350 (14 in)	EN 1092 or DIN	PN10	505 (19.88)	16	22	460	550	357	348	N/A	95	93
		PN16	520 (20.47)	16	26	470					110	108
		PN25	555 (21.85)	16	33	490					145	143
		PN40	580 (22.83)	16	36	510	650				195	193
	JIS B2220	5K	480 (18.90)	12	22	435	550				95	93
		10K	490 (19.29)	16	25	445						
	AS4087	PN16	525 (20.67)	12	26	470					130	128
		PN35	550 (21.65)	16	30	495					185	183
	ASME B16.5	CL300	585 (23.03)	20	31.8	514.4					140	138
		CL150	535 (21.06)	12	29	476.3					105	103
DN400 (16 in)	EN 1092 or DIN	PN10	565 (22.24)	16	26	515	600	399	390	N/A	103	101
		PN16	580 (22.83)	16	30	525					126	124
		PN25	620 (24.41)	16	36	550					170	168
		PN40	660 (25.98)	16	39	585	650				258	256
	JIS B2220	5K	540 (21.26)	12	25	495	600				103	101
		10K	560 (22.05)	16	27	510					116	114
	AS4087	PN16	580 (22.83)	12	26	521					154	152
		PN35	610 (24.02)	20	30	552					302	300
	ASME B16.5	CL300	650 (25.59)	24	35	571.5					265	263
		CL150	600 (23.62)	12	29	539.8					175	173

Table 5 F-style sensor – DN250 to 400 (10 to 16 in)

...Dimensions – sensors

F-style sensor – DN450 to 600 (18 to 24 in)

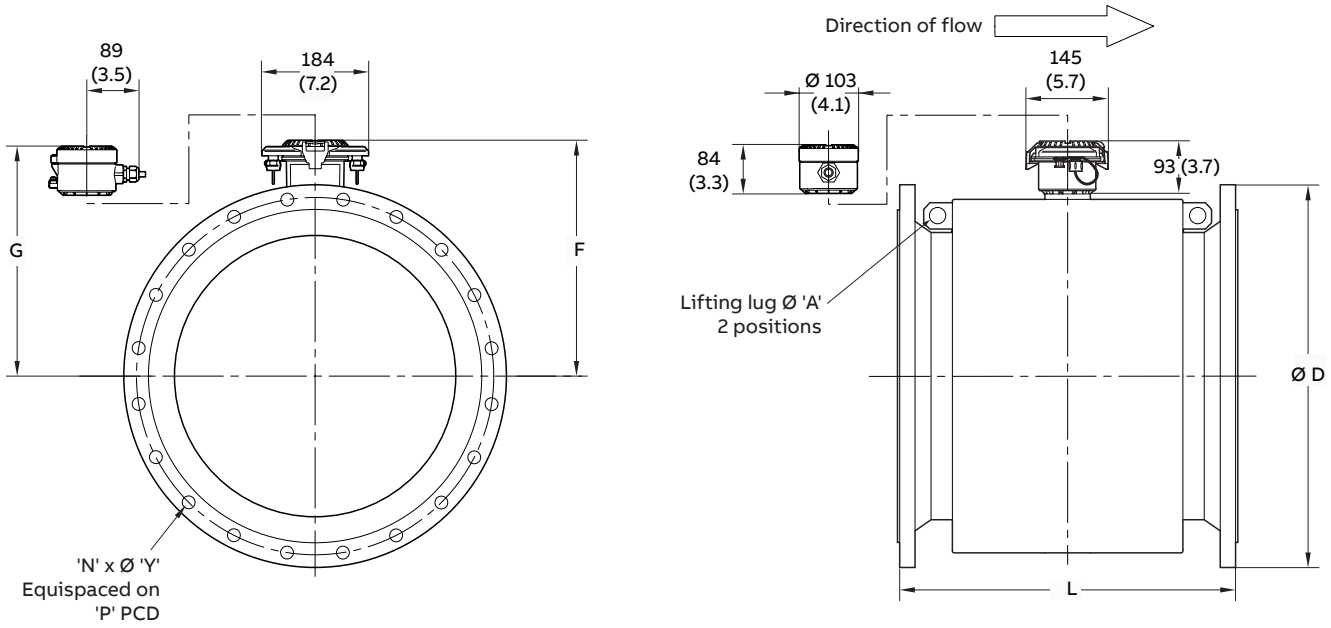

Figure 7 F-style sensor – DN450 to 600 (18 to 24 in)

Sensor size	Flange Standard	Flange Class	Dimensional in mm [in] Flange OD D	No. holes N	Bolt hole dia. Y	Bolt hole PCD P	Sensor length L	Trans height F	Tx box height G	Lifting lug A	Approx weight kg (lbs) INT	REM
DN450 (18 in)	EN 1092 or DIN	PN10	615 (24.21)	20	26	565	600	407	398	30	173	171
		PN16	640 (25.20)	20	30	585					188	186
		PN25	670 (26.38)	20	36	600	686				245	243
		PN40	685 (26.97)	20	39	610					315	313
	JIS B2220	5K	605 (23.82)	16	25	555	600				165	163
		10K	620 (24.41)	20	27	565					177	175
	AS4087	PN16	640 (25.20)	12	26	584					232	230
		PN35	675 (26.57)	20	33	610					328	326
	ASME B16.5	CL300	710 (27.95)	24	35	628.6					368	366
		CL150	635 (25.00)	16	32	577.9					250	248
DN500 (20 in)	EN 1092 or DIN	PN10	670 (26.38)	20	26	620	600	407	398	30	190	188
		PN16	715 (28.15)	20	33	650					240	238
		PN25	730 (28.74)	20	36	660	700				300	298
		PN40	755 (29.72)	20	42	670	762				392	390
	JIS B2220	5K	655 (25.79)	20	25	605	600				190	188
		10K	675 (26.57)	20	27	620						
	AS4087	PN16	705 (27.76)	16	26	641					290	288
		PN35	735 (28.94)	24	33	673					435	433
	ASME B16.5	CL150	700 (27.56)	20	32	635					300	298
		CL300	775 (30.51)	24	35	658.8	762				490	488
DN600 (24 in)	EN 1092 or DIN	PN10	780 (30.71)	20	30	725	800	458	449	30	284	282
		PN16	840 (33.07)	20	36	770					318	316
		PN25	845 (33.27)	20	39	770					460	458
		PN40	890 (35.04)	20	26	705	890				600	598
	JIS B2220	5K	770 (30.31)	20	27	715	800				275	273
		10K	795 (31.30)	24	33	730					306	304
	AS4087	PN16	825 (32.48)	16	30	756					382	380
		PN35	850 (33.46)	24	36	781					452	450
	ASME B16.5	CL300	915 (36.02)	24	41	812.8					550	548
		CL150	815 (32.09)	20	35	749.3					425	423

Table 6 F-style sensor – DN450 to 600 (18 to 24 in)

...Dimensions – sensors

F-style sensor – DN700 to 2400 (28 to 96 in)

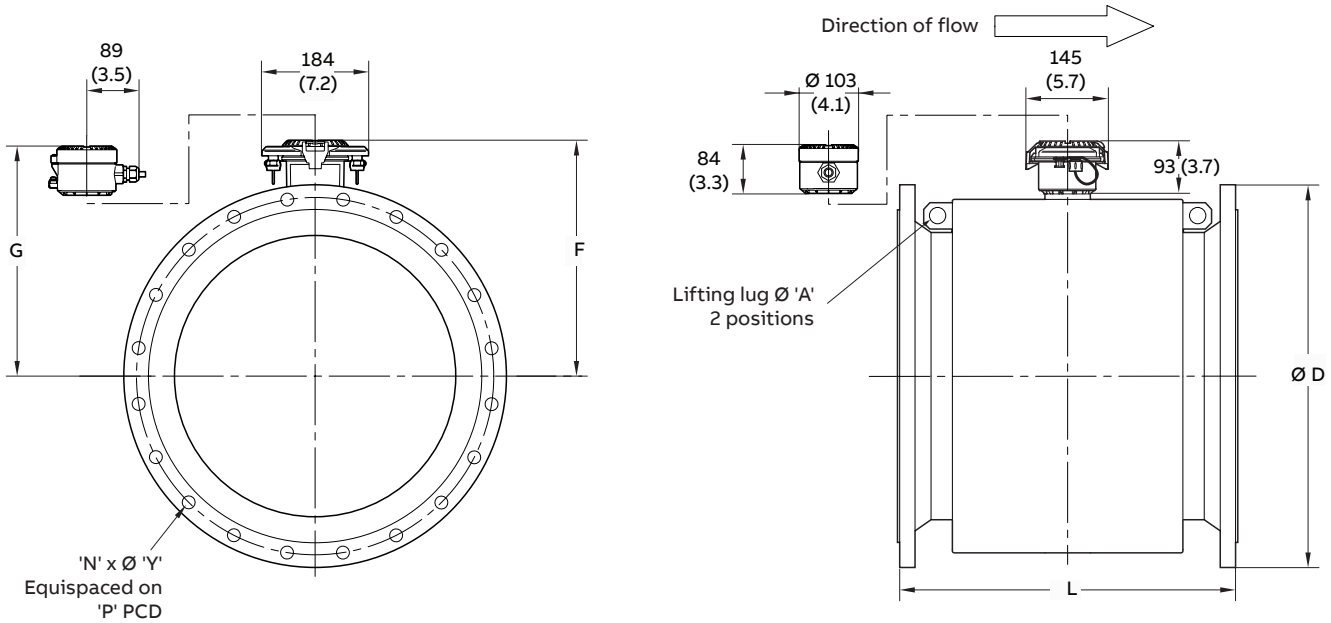

Figure 8 F-style sensor – DN700 to 2400 (28 to 96 in)

Sensor size	Flange Standard	Flange Class	Dimensional in mm (in) Flange OD D	No. holes N	Bolt hole dia. Y	Bolt hole PCD P	Sensor length L	Trans height F	Tx box height G	Lifting lug A	Approx weight kg (lbs) INT	REM
DN700 (28 in)	JIS	5K	875	24	27	820	700	497	492	30	216	214
		10K	905	24	33	840					282	280
	EN 1092 or DIN	PN6	860	24	26	810					225	223
		PN10	895	24	30	840					303	301
		PN16	910	24	36	840					337	335
		PN25	960	24	42	875	800				471	469
		PN40	995	24	48	900	910				586	584
	AWWA C207	CLASS B	927	28	32 (1.25)	864 (34)	700				249	247
		CLASS D	927								280	278
		CLASS E	927	28	32 (1.25)	864 (34)					472	470
		CLASS F	1035	28	44 (1.75)	940 (37)					715	713
	AS 4087	PN16	910	20	30	845					359	357
		PN35	935	24	36	857	910				539	537
	AS 2129	TABLE D	910	20	30	845	700				263	261
		TABLE E	910	20	33	845					337	335
	ASME B16.5	CL150 SERIES A	925	28	35 (1.375)	863.6	790				503	501
		CL150 SERIES B	835	40	22 (0.875)	795.3	910				323	321
	ASME B16.5	CL300 SERIES A	1035	28	44.5 (1.75)	939.8	940				811	809
		CL300 SERIES B	920	36	35 (1.375)	857.2	910				631	629

Table 7 F-style sensor – DN700 (28 in)

Sensor size	Flange Standard	Flange Class	Dimensional in mm (in) Flange OD D	No. holes N	Bolt hole dia. Y	Bolt hole PCD P	Sensor length L	Trans height F	Tx box height G	Lifting lug A	Approx weight kg (lbs) INT	REM
DN750 (30 in)	JIS	JIS5K	945	24	33	880	762	523	518	30	251	249
		JIS10K	970	24	33	900					327	325
	AWWA C207	CLASS B	984	28	32 (1.25)	914 (36)					273	271
		CLASS D	984								344	342
		CLASS E	984	28	32 (1.25)	914 (36)					496	494
		CLASS F	1092	28	44 (1.75)	997 (39.25)					790	788
	AS 4087	PN16	995	20	33	927					467	465
		PN35	1015	28	36	940	990				663	661
	AS 2129	TABLE D	995	20	33	927	762				340	338
		TABLE E	995	20	36	927					454	452
	ASME B16.5	CL150 SERIES A	985	28	35（1.375）	914.4	820				544	542
		CL150 SERIES B	885	44	22 (0.875)	846.1	990				320	318
	ASME B16.5	CL300 SERIES A	1090	28	47.6 (1.875)	997	975				972	970
		CL300 SERIES B	990	36	38.1 (1.5)	920.8	990				748	746
DN800 (32 in)	JIS	JIS5K	995	24	33	930	800	547	542	30	280	278
		JIS10K	1020	28	33	950					364	362
	EN 1092 or DIN	PN6	975	24	30	920					294	292
		PN10	1015	34	33	950					406	404
		PN16	1025	24	39	950	870				469	467
		PN25	1085	24	48	990	950				615	613
		PN40	1140	24	56	1030	1040				866	864
	AWWA C207	CLASS B	1060	28	38 (1.5)	978 (38.5)	800				328	326
		CLASS D	1060								408	406
		CLASS E	1060	28	38 (1.5)	978 (38.5)					634	632
		CLASS F	1150	28	44 (1.75)	1054 (41.5)					897	895
	AS 4087	PN16	1060	20	36	984					530	528
		PN35	1060	28	36	984	1040				751	749
	AS2129	TABLE D	1060	20	36	984	800				386	384
		TABLE E	1060	20	36	984					519	517
	ASME B16.5	CL150 SERIES A	1060	28	41.3 (1.625)	977.9	940				700	698
		CL150 SERIES B	940	48	22 (0.875)	900.1	1040				406	404
	ASME B16.5	CL300 SERIES A	1150	28	51 (2)	1054.1	1120				1227	1225
		CL300 SERIES B	1055	32	41.3 (1.625)	977.9	1040				933	931
DN900 (36 in)	JIS	JIS5K	1095	24	33	1030	900	598	593	30	369	367
		JIS10K	1120	28	33	1050					445	443
	EN 1092 or DIN	PN6	1075	24	30	1020					390	388
		PN10	1115	28	33	1050					502	500
		PN16	1125	28	39	1050					589	587
		PN25	1185	28	48	1090	1040				819	817
		PN40	1250	28	56	1140	1170				1158	1156
	AWWA C207	CLASS B	1168	32	38 (1.5)	1086 (42.75)	900				417	415
		CLASS D	1168								493	491
		CLASS E	1168	32	38 (1.5)	1086 (42.75)					827	825
		CLASS F	1270	32	51 (2)	1168 (46)					1150	1148
	AS 4087	PN16	1175	24	36	1092					706	704
		PN35	1185	32	39	1105	1170				1044	1042
	AS 2129	TABLE D	1175	24	36	1092	900				514	512
		TABLE E	1175	24	36	1092					694	692
	ASME B16.5	CL150 SERIES A	1170	32	41.3 (1.625)	1085.8	1010				961	959
		CL150 SERIES B	1055	44	25.4 (1)	1009.6	1170				595	593
	ASME B16.5	CL300 SERIES A	1270	32	54 (2.125)	1168.4	1080				1513	1511
		CL300 SERIES B	1170	32	44.5 (1.75)	1089	1170				1147	1145

Table 8 F-style sensor – DN750 to 900 (30 to 36 in)

...Dimensions – sensors

...F-style sensor – DN700 to 2400 (28 to 96 in)

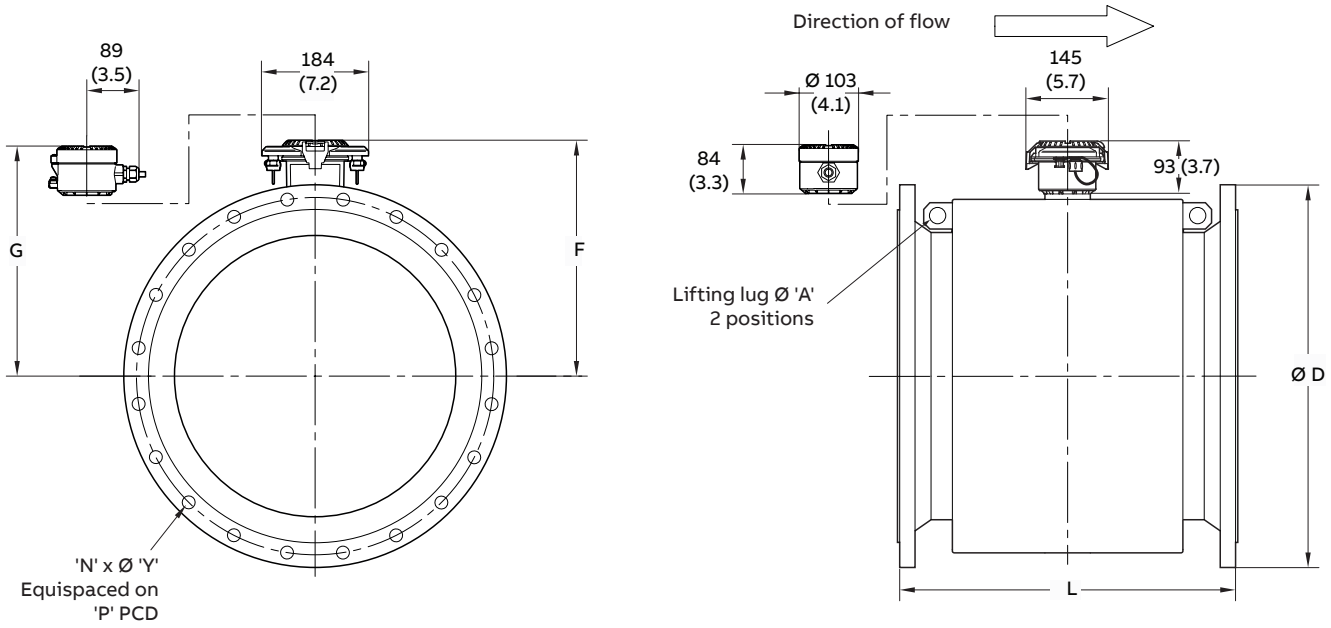

Figure 9 F-style sensor – DN700 to 2400 (28 to 96 in)

Sensor size	Flange		Dimensional in mm (in)								Approx weight kg (lbs)	
	Standard	Class	Flange OD	No. holes	Bolt hole dia.	Bolt hole PCD	Sensor length	Trans height	Tx box height	Lifting lug		
			D	N	Y	P	L	F	G	A	INT	REM
DN1000 (40 in)	JIS	JIS5K	1195	28	33	1130	1000	648	643	30	441	439
		JIS10K	1235	28	39	1160					572	570
	EN 1092 or DIN	PN6	1175	28	30	1120					466	464
		PN10	1230	28	36	1160					674	672
		PN16	1255	28	42	1170					879	877
		PN25	1320	28	56	1210	1170				1207	1205
		PN40	1360	28	56	1250	1300				1413	1411
	AWWA C207	CLASS B	1289	36	38 (1.5)	1200 (47.25)	1000				503	501
		CLASS D	1289								659	657
		CLASS E	1289	36	38 (1.5)	1200 (47.25)					1028	1026
		CLASS F	1378	36	51 (2)	1276 (50.25)					1367	1365
	AS 4087	PN16	1255	24	36	1175					831	829
		PN35	1275	36	39	1194	1300				1244	1242
	AS 2129	TABLE D	1255	24	36	1175	1000				610	608
		TABLE E	1255	24	39	1175					833	831
	ASME B16.5	CL150 SERIES A	1290	36	41.3 (1.625)	1200.2	1080				1149	1147
		CL150 SERIES B	1175	44	28.6 (1.125)	1120.8	1300				738	736
	ASME B16.5	CL300 SERIES A	1240	32	44.5 (1.75)	1155.7	1150				1349	1347
		CL300 SERIES B	1275	40	44.5 (1.75)	1190.6	1300				1487	1485

Table 9 F-style sensor – DN1000 (40 in)

Sensor size	Flange Standard	Flange Class	Dimensional in mm (in) Flange OD D	No. holes N	Bolt hole dia. Y	Bolt hole PCD P	Sensor length L	Trans height F	Tx box height G	Lifting lug A	Approx weight kg (lbs) INT	REM
DN1050 (42 in)	AWWA C207	CLASS B	1346	36	38 (1.5)	1257 (49.5)	1067	701	697	30	564	562
		CLASS D	1346								669	667
		CLASS E	1346	36	38 (1.5)	1257 (49.5)					1143	1141
		CLASS F	1448	36	51 (2)	1340 (52.75)					1568	1566
	ASME B16.5	CL150 SERIES A	1345	36	41.3 (1.625)	1257.3					1289	1287
		CL150 SERIES B	1225	48	28.6 (1.125)	1171.6					809	807
	ASME B16.5	CL300 SERIES A	1290	32	44.5 (1.75)	1206.5	1170				1527	1525
		CL300 SERIES B	1335	36	47.6 (1.875)	1244.6	1365				1704	1702
DN1100 (44 in)	JIS	JIS5K	1305	28	33	1240	1118	701	697	30	510	508
		JIS10K	1345	28	39	1270					689	687
	AWWA C207	CLASS B	1403	40	38 (1.5)	1315 (51.75)					615	613
		CLASS D	1403								807	805
		CLASS E	1404	40	38 (1.5)	1315 (51.75)					1205	1203
		CLASS F	1505	36	51 (2)	1397（55）					1719	1717
DN1200 (48 in)	JIS	5K	1420	32	33	1350	1200	753	748	30	651	649
		10K	1465	32	39	1380					967	965
	EN 1092 or DIN	PN6	1405	32	33	1340					710	708
		PN10	1455	32	39	1380					1107	1105
		PN16	1485	32	48	1390					1363	1361
		PN25	1530	32	56	1420	1560				1559	1557
		PN40	1575	32	62	1460					2133	2131
	AWWA C207	CLASS B	1511	44	38 (1.5)	1422 (56)	1200				772	770
		CLASS D	1511								999	997
		CLASS E	1511	44	38 (1.5)	1422 (56)					1458	1456
		CLASS F	1651	40	51 (2)	1543 (60.76)					2400	2398
	AS 4087	PN16	1490	32	36	1410					1253	1251
	AS 2129	TABLE-D	1490	32	36	1410					1023	1021
		TABLE-E	1490	32	39	1410					1272	1270
	AS 4087	PN35	1530	40	42	1441	1560				2115	2113
	ASME CL150	SERIES A	1510	44	41.3 (1.625)	1422.4	1310				1707	1705
		SERIES B	1390	44	31.8 (1.25)	1335.1	1200				1085	1083
	ASME CL300	SERIES A	1465	32	51 (2)	1371.6	1400				2163	2161
		SERIES B	1510	40	51 (2)	1416	1560				2352	2350
DN1350 (54 in)	AWWA C207	CLASS B	1683	44	44 (1.75)	1594 (62.75)	1350	848	843	45	981	979
		CLASS D	1683								1213	1211
		CLASS E	1683	44	44 (1.75)	1594 (62.75)					1942	1940
DN1400 (56 in)	EN 1092 or DIN	PN6	1630	36	36	1560	1400	848	843	45	1085	1083
		PN10	1675	36	42	1590					1731	1729
		PN16	1685	36	48	1590					1770	1768
		PN25	1755	36	62	1640	1820				2368	2366
		PN40	1795	36	62	1680					3086	3084
	ASME CL150	SERIES A	1745	48	47.6 (1.875)	1651	1490				2566	2554
		SERIES B	1600	60	31.8 (1.25)	1543	1400				1593	1591
	ASME CL300	SERIES A	1710	28	60.3 (2.375)	1600.2	1600				3376	3374
		SERIES B	1765	36	60.3 (2.375)	1651	1820				3758	3756

Table 10 F-style sensor – DN1050 to 1400 (42 to 56 in)

...Dimensions – sensors

...F-style sensor – DN700 to 2400 (28 to 96 in)

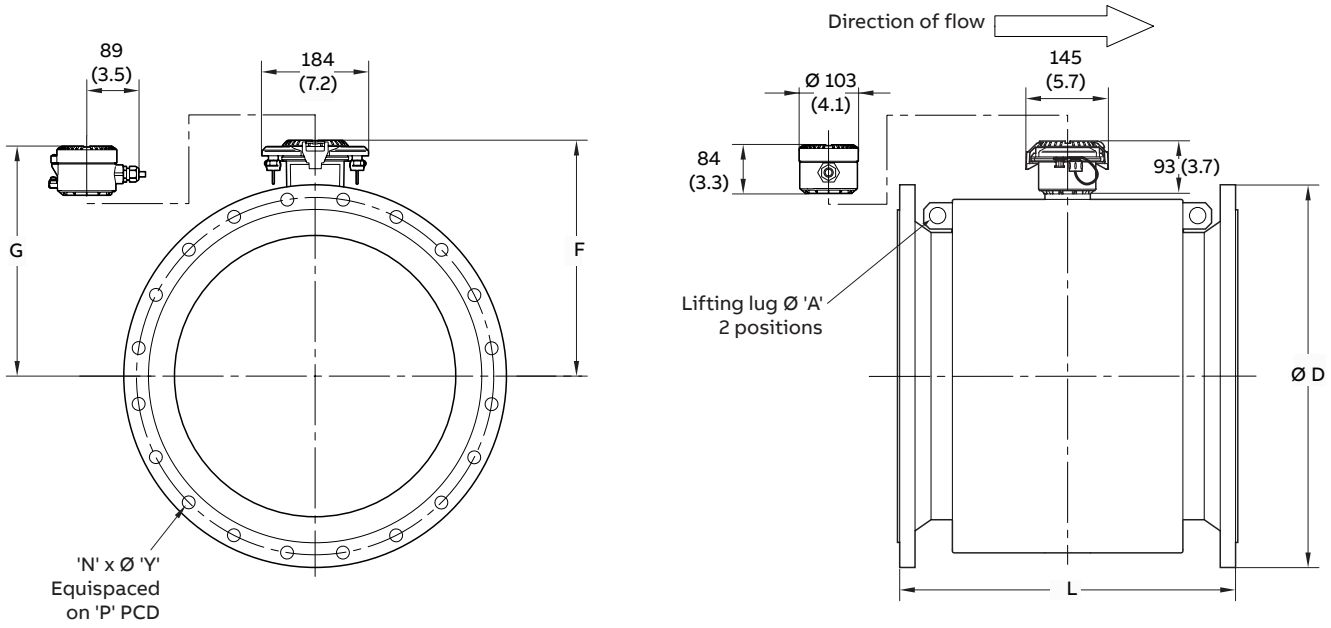

Figure 10 F-style sensor – DN700 to 2400 (28 to 96 in)

Sensor size	Flange Standard	Flange Class	Dimensional in mm (in) Flange OD D	No. Holes N	Bolt Hole Dia Y	Bolt Hole PCD P	Sensor Length L	Trans Height F	Tx box Height G	Lifting Lug A	Approx weight in kg(lbs) INT	REM
DN1500 (60 in)	JIS	5K	1730	36	33	1660	1524	958	953	45	1029	1027
		10K	1795	40	45	1700					1504	1502
	AWWA C207	CLASS B	1854	52	44(1.75)	1759(69.25)					1229	1227
		CLASS D	1854								1514	1512
		CLASS E	1854	52	44(1.75)	1759(69.25)					2544	2542
	ASME CL150	SERIES A	1855	52	47.6(1.875)	1759					3084	3082
		SERIES B	1725	52	35(1.375)	1662.1					2031	2029
	ASME CL300	SERIES A	1810	32	60.3(2.375)	1701.8	1640				3875	3873
		SERIES B	1880	40	60.3(2.375)	1763.7	1950				4181	4179
DN1600 (64 in)	EN 1092 or DIN	PN6	1830	40	36	1760	1600	959	954	45	1434	1432
		PN10	1915	40	48	1820					2525	2523
		PN16	1975	40	56	1820					2768	2766
		PN25	1930	40	62	1860	2080				3201	3199
		PN40	2025	40	70	1900					4375	4373
DN1650 (66 in)	AWWA C207	CLASS B	2032	52	44(1.75)	1930(76)	1650	1009	1004	45	1504	1502
		CLASS D	2032								2025	2023
DN1800 (72 in)	EN 1092 or DIN	PN6	2045	44	39	1970	1800	1074	1069	45	1853	1851
		PN10	2115	44	48	2020					3180	3178
		PN16	2130	44	56	2020					3657	3655
		PN25	2195	44	70	2070	2380				4422	4420
	AWWA C207	CLASS B	2197	60	44(1.75)	2096(82.5)	1800				1773	1771
		CLASS D	2197								2387	2385
DN1950 (78 in)	AWWA C207	CLASS B	2362	64	51(2)	2261(89)	1950	1184	1179	45	2309	2307
		CLASS D	2362								3037	3035
DN2000 (80 in)	EN 1092 or DIN	PN6	2265	48	42	2180	2000	1184	1179	45	2581	2579
		PN10	2325	48	48	2230					4254	4252
		PN16	2345	48	62	2230					4556	4554
		PN25	2425	48	70	2300	2600				5896	5894
DN2100 (84 in)	AWWA C207	CLASS B	2534	64	51(2)	2426(95.5)	2100	1288	1283	45	2641	2639
		CLASS D	2534								3487	3485
DN2200 (88 in)	EN 1092 or DIN	PN6	2475	52	42	2390	2200	1288	1283	45	3363	3361
		PN10	2550	52	56	2440					5795	5793
DN2400 (96 in)	EN 1092 or DIN	PN6	2685	56	42	2600	2400	1388	1283	45	4100	4098
		PN10	2760	56	56	2650					6968	6966

Table 11 F-style sensor – DN1500 to 2400 (42 to 96 in)

Dimensions – insertion flowmeter

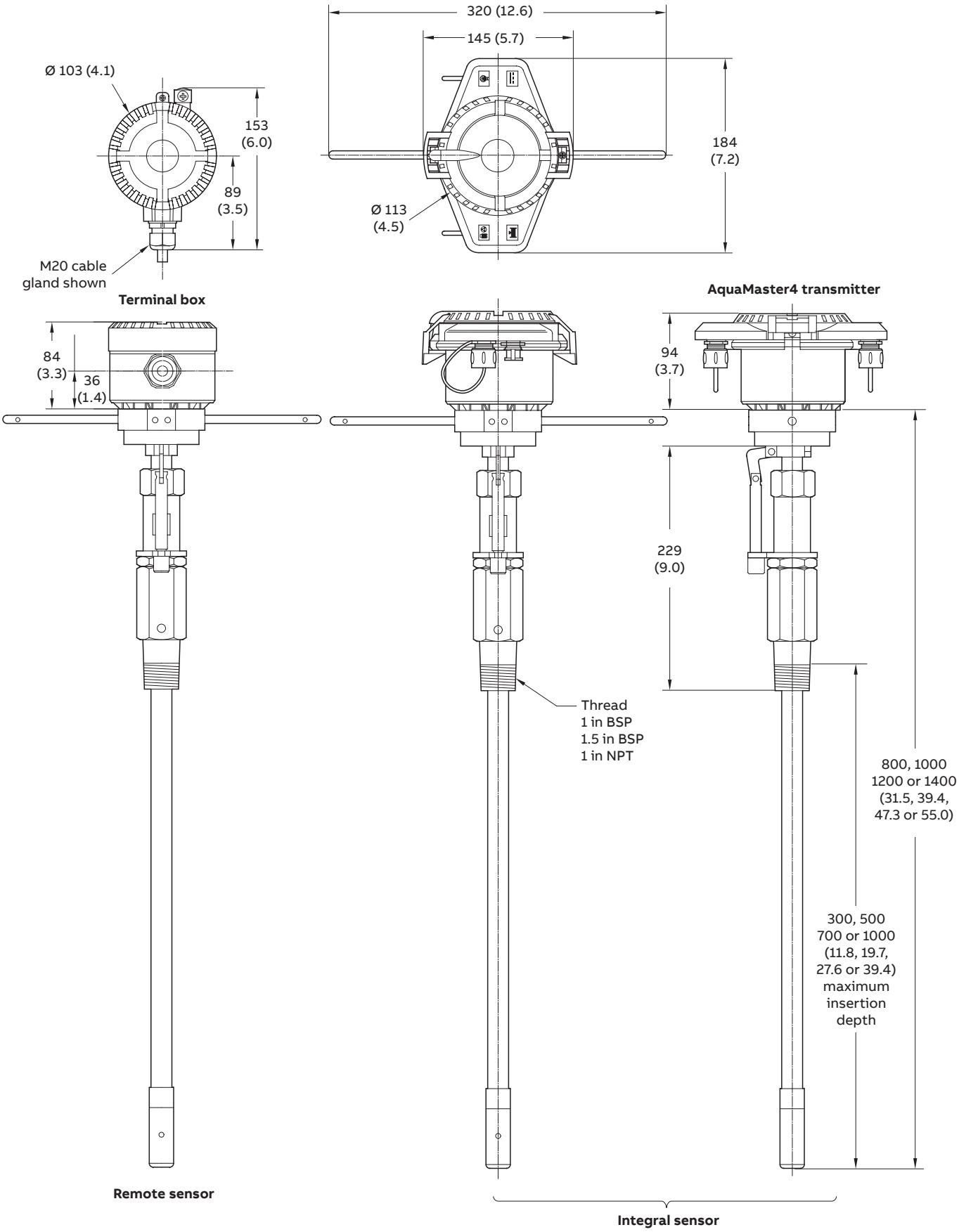

Installation requirements – sensor

This section is intended to give an overview of installation of a flowmeter. For Installation requirements, technical information and Health and Safety precautions refer to User Guide OI/FER100/FER200-EN.

Unpacking the flowmeter
Care must be taken when lifting the flowmeter to use the lifting hooks provided or sling under the body of the meter. Never lift the flowmeter using the terminal connection box of the sensor cable as this causes damage and invalidates the warranty.

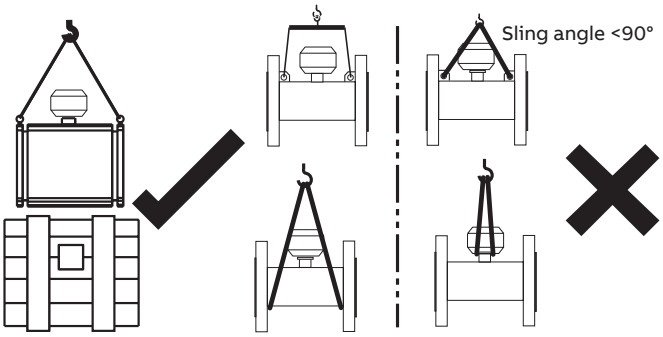

Grounding
The flowmeter sensor must be cross-bonded to the upstream and downstream pipes. For technical reasons, this potential must be identical to the potential of the metering fluid. The fluid connection is made by installing 2 fluid contact rings (for grounding).

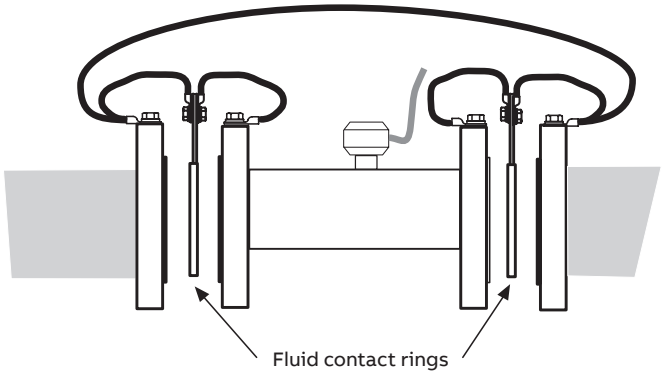

Note. The grounding arrangements shown below are applicable to both cathodic and non-cathodic protected installations.

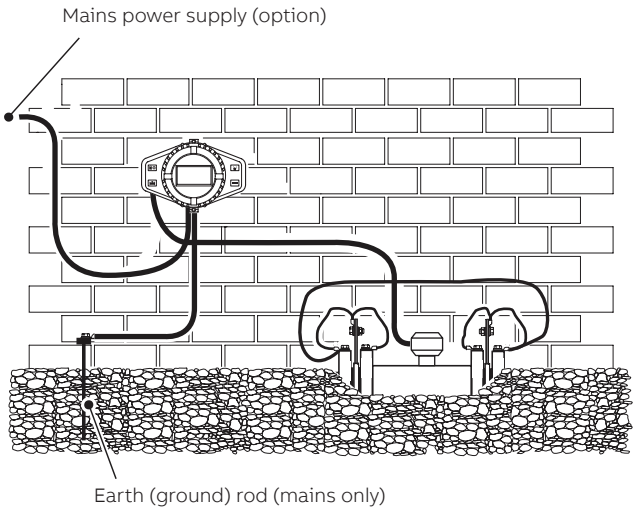

Mounting
The installation conditions shown below must be observed to achieve the best operational results. The sensor tube must always be completely full.

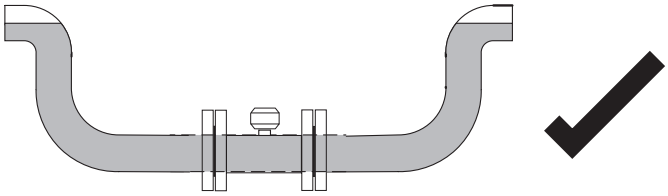

The flow direction must correspond to the identification plate. The flowmeter measures the flowrate in both directions. Forward flow is the factory setting.

The flowmeter must be installed without mechanical tension (torsion, bending). If necessary, support the pipeline.

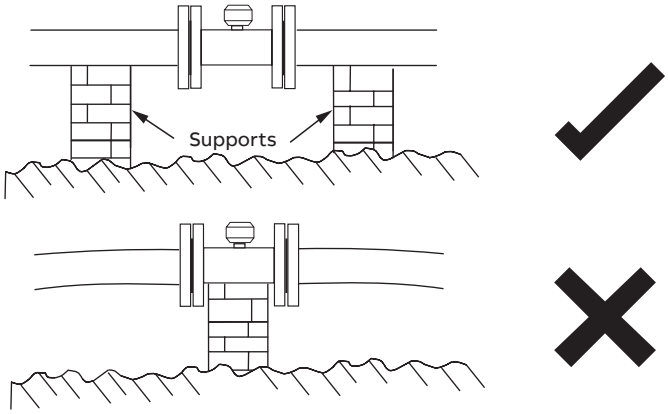

...Installation requirements – sensor

The flange seal material must be compatible with the fluid and fluid temperatures.

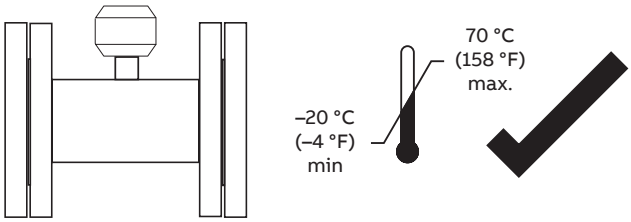

Seals must not extend into the flow area as this causes turbulence that adversely influences flowmeter accuracy.

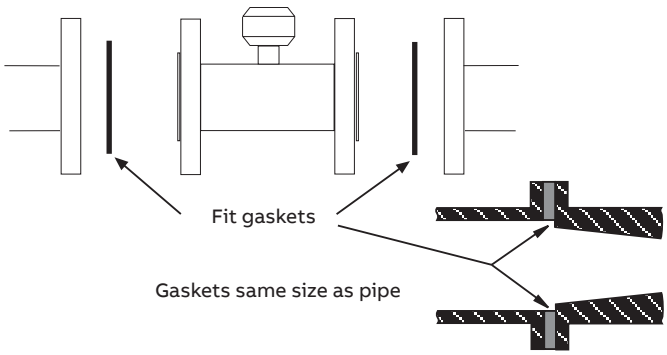

The pipeline must not exert any forces and torques on the flowmeter (for example, vibration).

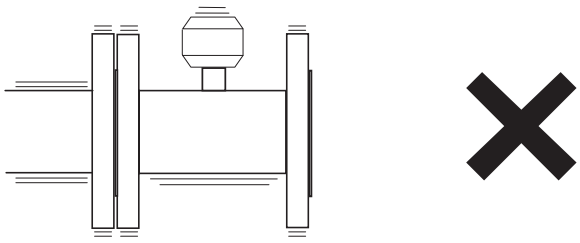

The flowmeter must not be submitted to localized heating during installation; take care to remember this is a measuring instrument.

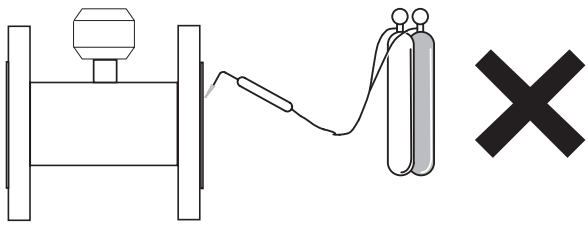

The flowmeter must not be exposed to direct sunlight. Provide appropriate sun protection where necessary.

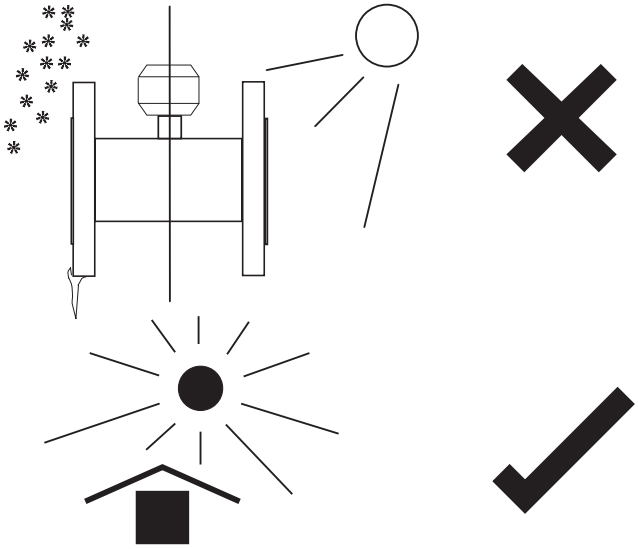

The cable to the flowmeter must be installed neatly or within a conduit. Both loose or conduit installations must have a u-bend below terminal connection box height to enable any water to run off thus avoiding any capillary action into the flowmeter sensor.

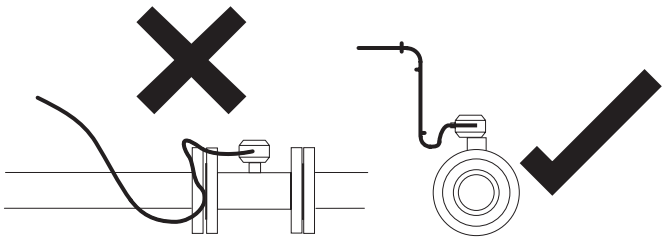

Electrode axis
The electrode axis must be horizontal wherever possible or no more than 45° from horizontal.

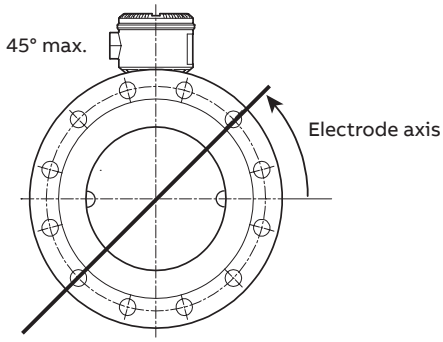

Installation requirements – transmitter

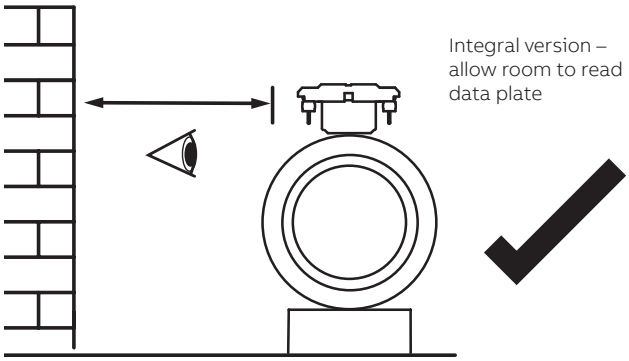

Figure 11 Siting

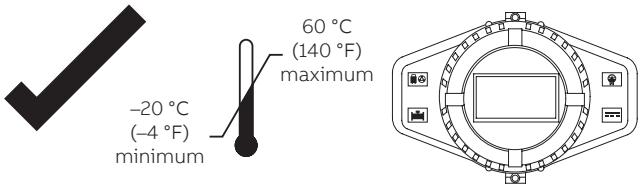

Figure 12 Within temperature limits

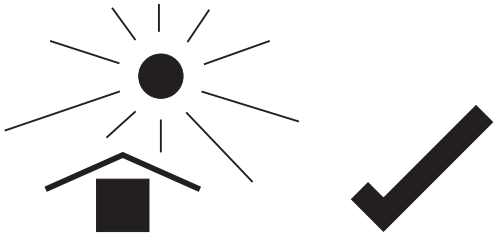

Figure 13 Shade

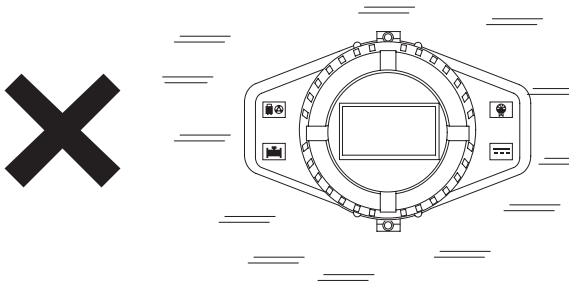

Figure 14 Vibration

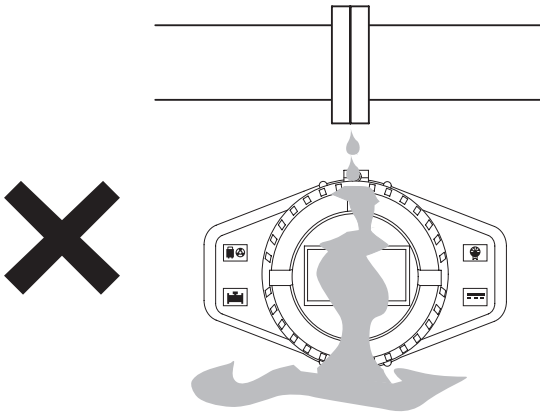

Figure 15 Spillage

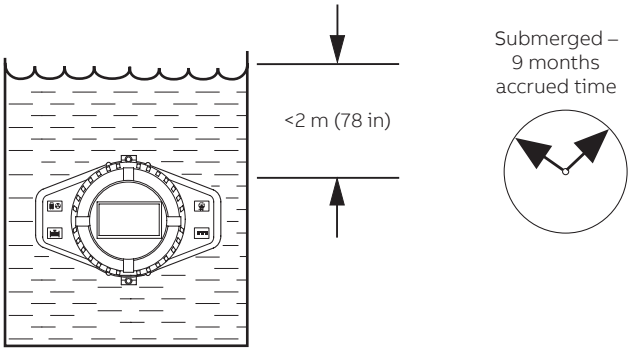

Figure 16 Within environmental rating

...Installation requirements – transmitter

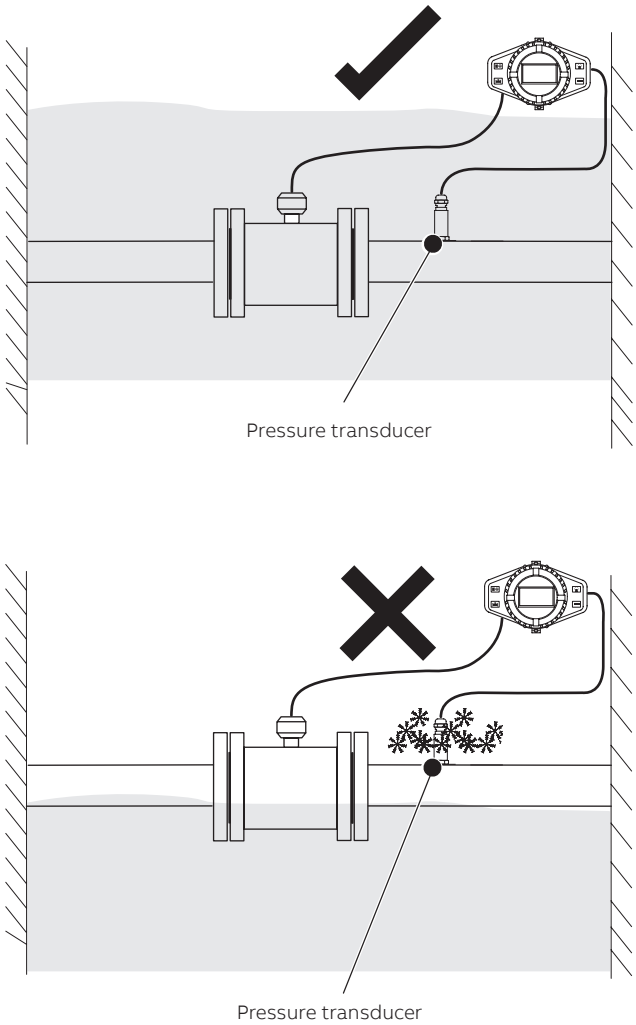

Figure 17 Pressure transducer – protect from frost

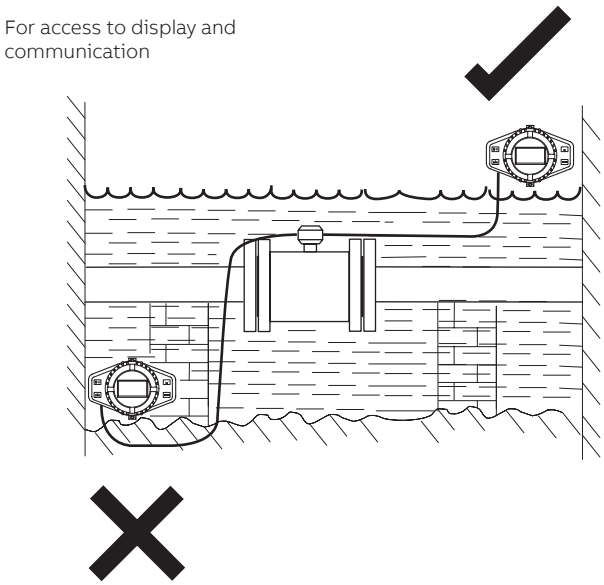

Figure 18 Access to transmitter

AquaMaster4 series differences

		AquaMaster4	
	Features	**41X (standard)**	**43X (advanced)**
Mounting	Integral	✔	✔
	Remote	✔	✔
Sensors	Full bore flanged rubber DN40 to DN2400	✔	✔
	Virtual full bore flanged polypropylene DN40 to DN200	✔	✔
	Reduced bore flanged rubber DN40 to DN600	✔	✔
	Probe 300 to 1000 mm	✔	✔
Measurement	Class 2/0.5 % calibration	✔	
	Class 2/0.4 % calibration		✔
	Class 1 and 2/0.2 % calibration		✔
	Extended range class 1 and 2 calibration to OIML R49 and NMI R49		✔
	Totalizer	✔	✔
	Pressure		✔
	Internal logger		✔
Power	AC (100 to 230 V, 50 or 60 Hz)		✔
	Battery	✔	✔
	Renewable (solar/wind)		✔
Outputs	Digital outputs	✔	✔
	Modbus		✔
	Sensus compatible	✔	✔
Special application needs	Sensor submerged (up to 10 m) or buried (up to 5 m) *	✔	✔
	Retrofit with legacy AquaMaster sensors		✔

*DN40 to 600 reduced bore, DN40 to 200 virtual full bore sensors and DN450 to 2400 full bore sensors

Ordering information

Electromagnetic flowmeter

	1,2,3,4,5,6	7	8,9,10,11	12,13	14	15	16	17,18	19	20,21
Sensor and transmitter										
Standard integral flowmeter	FEW411									
Standard remote flowmeter	FEW412									
Advanced integral flowmeter	FEW431									
Advanced remote flowmeter	FEW432									
Sensor only										
Standard remote sensor	FEW418									
Advanced remote sensor	FEW438									
Sensor style/liner material										
Full bore/rubber liner		F								
Virtual full bore/polypropylene liner		V								
Reduced bore/rubber liner		R								
Probe/PEEK		A								
Meter size			0040							
DN40 (1½ in)			0050							
DN50 (2 in)			0065							
DN65 (2½ in)			0080							
DN80 (3 in)			0100							
DN100 (4 in)			0125							
DN125 (5 in)			0150							
DN150 (6 in)			0200							
DN200 (8 in)			0250							
DN250 (10 in)			0300							
DN300 (12 in)			P030							
300 mm (12 in) insertion probe length			0350							
DN350 (14 in)			4000							
DN400 (16 in)			0450							
DN450 (18 in)			0500							
DN500 (20 in)			P050							
500 mm (20 in) insertion probe length			0600							
DN600 (24 in)			0700							
DN700 (28 in)			P070							
700 mm (28 in) insertion probe length			0750							
DN750 (30 in)			0800							
DN800 (32 in)			0900							
DN900 (36 in)			1000							
DN1000 (40 in)			P100							
1000 mm (40 in) insertion probe length			1050							
DN1050 (42 in)			1100							
DN1100(44 in)			1200							
DN1200 (48 in)			1350							
DN1350 (54 in)			1400							
DN1400 (56 in)			1500							
DN1500 (60 in)			1600							
DN1600 (64 in)			1650							
DN1650 (66 in)			1800							
DN1800 (72 in)			1950							
DN1950 (78 in)			2000							
DN2000 (80 in)			2100							
DN2100 (84 in)			2200							
DN2200 (88 in)			2400							
DN2400 (96 in)			9999							
Others										

Continued on next page …

	1,2,3,4,5,6	7	8,9,10,11	12,13	14	15	16	17,18	19	20,21
	See page 42									
Process connection type										
ANSI/ASME B16.5/16.47 series B Class 150 – DN40 to 600 (1½ to 24 in)				A1						
ANSI/ASME B16.5/16.47 series B Class 300 – DN40 to 600 (1½ to 24 in)				A3						
AWWA C207 Class B – DN700 to 2400 (28 to 96 in)				C1						
AWWA C207 Class D – DN700 to 2400 (28 to 96 in)				C2						
AWWA C207 Class E – DN700 to 2400 (28 to 96 in)				C3						
AS 4087 PN 16 – DN40 to 2400 (1½ to 96 in)				E1						
AS 2129 Table E – DN40 to 2400 (1½ to 96 in)				E4						
JIS 7.5K – DN40 to 2400 (1½ to 96 in)				J0						
JIS 10K – DN40 to 2400 (1½ to 96 in)				J1						
JIS 5K – DN40 to 2400 (1½ to 96 in)				J2						
1 in BSP coupling (⅛ in pressure tap) – probe only				N1						
1½ in BSP coupling (⅛ in pressure tap) – probe only				N2						
1 in NPT coupling (⅛ in pressure tap) – probe only				N3						
ISO 7005, DIN, EN 1092 – 1 PN 10 – DN40 to 2400 (1½ to 96 in)				S1						
ISO 7005, DIN, EN 1092 – 1 PN 16 – DN40 to 2400 (1½ to 96 in)				S2						
ISO 7005, DIN, EN 1092 – 1 PN 25 – DN40 to 2400 (1½ to 96 in)				S3						
ISO 7005, DIN, EN 1092 – 1 PN 40 – DN40 to 2400 (1½ to 96 in)				S4						
Others				Z9						
Process connection material										
Carbon steel					B					
Stainless steel					C					
Stainless steel carrier (probe only)					J					
Brass seal carrier (probe only)					K					
Without (probe only)					U					
Measuring electrodes material										
Stainless steel 316L (1.4404)						R				
Super austenitic steel (1.4529)						U				
Grounding accessories										
Without							A			
2 grounding rings (standard)							E			
Protection class – transmitter/sensor										
IP 68, NEMA 6P/IP 68, NEMA 6P – integral, remote cable not fitted and not potted (IP68 only after potting by others)								80		
IP 68, NEMA 6P/IP 68, NEMA 6P – remote mount cable fitted and potted								81		
Power supply										
Battery powered – battery not fitted									B	
Battery powered – battery fitted									L	
AC + internal back-up									K	
External renewable energy + internal back-up									R	
Outputs										
MODBUS + pulse output *										M4
Pulse output										B1
Sensus communication protocol compatible + pulse output *										S1
Without (FEW411, FEW412 and sensor only)										Y0

* With 3KXF221400L0XXX FEW4 sensor cable – see **Accessories** on page 47.

...Ordering information

...Electromagnetic flowmeter

Options – add to order code as required	
Logger and protocol	
Internal logger option	LPN
Calibration type (3 test points as standard)	
Class 2.5 calibration to NMI M10 – FEW411 and FEW412 only	RCS
Class 2/0.5 % factory calibration – FEW411 and FEW412 only	RCC
Class 2/0.4 % factory calibration – standard with FEW431 and FEW432 only	RCD
Class 2/0.2 % factory calibration – option with FEW431 and FEW432 only	RCB
Class 1/0.2 % factory calibration – option with FEW431 and FEW432 only	RCF
Class 2 calibration to OIML R49 and NMI R49 – option with FEW431 and FEW432 only	RCM
Class 1 calibration to OIML R49 and NMI R49 – option with FEW431 and FEW432 only	RCN
2 % factory calibration (probe only)	RCW
Number of test points	
1	TV1
5	TV5
Signal cable length and type	
5 m (approx. 15 ft)	SC1
10 m (approx. 30 ft)	SC2
20 m (approx. 66 ft)	SC4
30 m (approx. 98 ft)	SC6
50 m (approx. 164 ft)	SCA
100 m (approx. 328 ft)	SCE
150 m (approx. 492 ft)	SCG
Additional cables	
Sensus cable, 5 m	SR1
Sensus cable, 20 m	SR4
Renewable energy cable, 10 m	SP2
Accessories	
1½ in ball valve	AB
RS485 lead with MIL connector for MODBUS	AT
Display protective cover	
Display protective cover without NFC	AD1
Display protective cover with NFC, 5 m cable	AD2
Display protective cover with NFC, 20 m cable	AD3
Pressure span	
2000 kPa/20 bar/300 psi	PS3
4000 kPa/40 bar/580 psi	PS4
Pressure transducer	
Remote, cable length 10 m (33 ft)	PT5
Remote, cable length 20 m (65 ft)	PT6
Other usage certifications	
UL Fire Service approval	CMF
Potable water approvals	
WRAS – cold water approval	CWA
NSF-61	CWC
DVGW	CWD
AZ/NZS 4020	CWE
ACS	CWF
WRAS – 60 °C water approval	CWK
Other options	
With customer property label	KL
Documentation language	
German	M1
Spanish	M3
French	M4
English	M5
Chinese	M6
Polish	M9

Transmitter

Product coding field number	1,2,3,4,5,6	7	8,9
Transmitter only			
Standard remote transmitter	FET412		
Advanced remote transmitter	FET432		
Power supply			
Battery powered – battery not fitted		B	
Battery powered – battery fitted		L	
AC + internal back-up		K	
External renewable energy + internal back-up		R	
Outputs			
MODBUS			M4
Pulse output			B1
Sensus communication protocol compatible			S1
Without (FEW411 and FEW412 only)			Y0

Options – add to order code as required	
Logger and protocol	
Internal logger option	LPN
Additional cables	
Sensus cable, 5 m	SR1
Sensus cable, 20 m	SR4
Renewable energy cable, 10 m	SP2
Accessories	
RS485 lead with MIL connector for MODBUS	AT
Display protective cover	
Display protective cover without NFC	AD1
Display protective cover with NFC, 5 m cable	AD2
Display protective cover with NFC, 20 m cable	AD3
Pressure span	
2000 kPa/20 bar/300 psi	PS3
4000 kPa/40 bar/580 psi	PS4
Pressure transducer	
Remote, cable length 10 m (33 ft)	PT5
Remote, cable length 20 m (65 ft)	PT6
Other usage certifications	
Measuring Instruments Directive (MID)	CM1
Documentation language	
German	M1
Spanish	M3
French	M4
English	M5
Chinese	M6
Polish	M9

...Ordering information

Probe bore gauge tool

	1,2,3,4	5	6,7,8,9
Probe bore gauge tool	APBGT		
Housing			
R1 housing		2	
Bore size			
700 mm			700
760 mm			760
800 mm			800
900 mm			900
1000 mm			1000
1100 mm			1100
1200 mm			1200
1400 mm			1400
1500 mm			1500
1600 mm			1600
1800 mm			1800
2000 mm			2000
2200 mm			2200

Transmitter electronics only

	1,2,3,4, 5, 6	7	8,9
Standard integral transmitter generic	F E T 4 1 9		
Standard remote transmitter generic	F E T 4 1 0		
Advanced integral transmitter generic	F E T 4 3 9		
Advanced remote transmitter generic	F E T 4 3 0		
Power supply			
Battery powered – battery not fitted		B	
AC + internal back-up		K	
External renewable energy + internal back-up		R	
Outputs			
MODBUS			M4
Pulse output			B1
Sensus communication protocol compatible			S1
Without			Y0

Additional codes to be added as required	
Logger and protocol	
Internal logger option	LPN
Pressure span	
2000 kPa/20 bar/300 psi	PS3
4000 kPa/40 bar/580 psi	PS4
Others	PSZ
Pressure transducer	
Remote, cable length 10 m (33 ft)	PT5
Remote, cable length 20 m (65 ft)	PT6
Other usage certifications	
Measuring Instruments Directive (MID)	CM1
Documentation language	
German	M1
Spanish	M3
French	M4
English	M5
Chinese	M6
Polish	M9

Accessories

Part No.	Description
3KXF208400L0100	AM4 battery pack 10 lithium D cells
3KXF208400L0200	AM4 battery pack 50 lithium D cells
3KXF208400L0300	AM4 display protective cover
3KXF208400L0400	AM4 display protective cover NFC 5 m cable
3KXF208400L0500	AM4 display cover NFC 20 m Cable
3KXF208400L0600	AM4 RS485 lead Mil connectors Modbus
3KXF221400L0100	FEW4 sensor cable 5 m (15 ft approx.)
3KXF221400L0200	FEW4 sensor cable 10 m (30 ft approx.)
3KXF221400L0300	FEW4 sensor cable 20 m (66 ft approx.)
3KXF221400L0400	FEW4 sensor cable 30 m (98 ft approx.)
3KXF221400L0500	FEW4 sensor cable 50 m (164 ft approx.)
3KXF221400L0600	FEW4 sensor cable 100 m junction box/Mil
3KXF221400L0700	FEW4 sensor cable 150 m junction box/Mil
3KXF221400L0800	FEW4 sensor cable 500 m
3KXF221400L0900	FEW4 junction box and cable – M20 to Mil
3KXF208400L0700	AM4 Sensus cable 5 m (15 ft approx.)
3KXF208400L0800	AM4 Sensus cable 20 m (66 ft approx.)
3KXF208400L0900	AM4 renewable energy cable 10 m
3KXF208400L1000	AM4 pulse output cable 1 m
3KXF208400L2100	AM4 pressure transducer 20 bar 10 m
3KXF208400L2200	AM4 pressure transducer 20 bar 20 m
3KXF208400L2500	AM4 pressure transducer 40 bar 10 m
3KXF208400L2600	AM4 pressure transducer 40 bar 20 m
3KXF221400L1100	FEW4 terminal box potting compound 200 g
3KXF221400L1200	FEW4 ball valve stainless steel 1½ in BSP
3KXF221400L1300	FEW4 bush stainless steel 1½ in M x 1 in BSP
3KXF221400L1400	FEW4 ball valve stainless steel 1½ in NPT
3KXF221400L1500	FEW4 bush stainless steel 1½ in M x 1 in NPT
3KXF221400L1600	FEW4 AquaProbe seal replacement kit
3KXF208400L2700	AM4 transmitter seal kit
3KXF208400L2800	AM4 battery connector kit
3KXF221400L1700	FEW4 pre-amp board and potting kit
3KXF208400L2900	Aquamaster 4 – demonstration kit
3KXF221400L1800	FEW4 terminal box maintenance kit
3KXF208400L3000	AM4 anti-tamper security kit
3KXF208400L3100	AM4 remote transmitter mounting bracket kit
3KXF221400L1900	FEW4 earth strap kit

Acknowledgments

- MODBUS is a registered trademark of the Modbus-IDA organization.
- Sensus is a registered trademark of Sensus USA, Inc.
- Windows is a registered trademark of Microsoft Corporation in the United States and/or other countries.

Sales Service Software

Castel Maggiore (BO) 40013
Via Lirone 60/i

e-mail: info@eurotecsrl.com
Tel: +39 051/6321595
Website: www.eurotecsrl.com

C.F.: 04103780377
P.I.: 01596581205

—

ABB Limited
Measurement & Analytics
Oldends Lane, Stonehouse
Gloucestershire, GL10 3TA
UK
Tel: +44 (0)1453 826 661
Fax: +44 (0)1453 829 671
Email: instrumentation@gb.abb.com

ABB Inc.
Measurement & Analytics
125 E. County Line Road
Warminster, PA 18974
USA
Tel: +1 215 674 6000
Fax: +1 215 674 7183

ABB Engineering (Shanghai) Ltd.
Measurement & Analytics
No. 4528, Kangxin Highway
Pudong New District
Shanghai, 201319
P.R. China
Tel: +86(0) 21 6105 6666
Fax: +86(0) 21 6105 6677
Email: china.instrumentation@cn.abb.com

abb.com/measurement/flow

We reserve the right to make technical changes or modify the contents of this document without prior notice. With regard to purchase orders, the agreed particulars shall prevail. ABB does not accept any responsibility whatsoever for potential errors or possible lack of information in this document.

We reserve all rights in this document and in the subject matter and illustrations contained therein. Any reproduction, disclosure to third parties or utilization of its contents – in whole or in parts – is forbidden without prior written consent of ABB.

© Copyright 2020 ABB.
All rights reserved.

DS/FET400-EN Rev. C 05.2020