ABB MEASUREMENT & ANALYTICS | DATA SHEET

# AX480, AX488 and AX468

## Single and dual input analyzers for dissolved oxygen

# Measurement made easy

## More processing power, lower energy costs

**Cost effective**
- select one or two dissolved oxygen inputs or combine pH/Redox (ORP) and dissolved oxygen in one analyzer

**Reduced installation cost**
- easy access terminations; reduced panel space

**High functionality at minimum cost**
- three alarms and two fully isolated current outputs
- integral water / chemical sensor cleaner control
- integral PID controller (AX480)

**Expanded monitoring and control**
- add-on option board provides up to five alarm relays and four current outputs
- service logbook providing historical data

**On line assurance of reliability**
- comprehensive sensor and instrument self-checking

**High measurement accuracy**
- salinity, temperature and atmospheric pressure compensation included

**Energy saving**
- high visibility, backlit display with auto switch-off function

**Reduced yearly maintenance costs**
- 12 to 30 V DC option negates the need for costly safety tests

## The AX400 series

AX400 Analyzers incorporate the latest technology providing highly reliable, flexible, feature-packed devices that satisfy a diverse range of process monitoring and control applications. The complete range encompasses solutions for pH/Redox (ORP), conductivity and dissolved oxygen.

AX48x instruments enable continuous measurements of one or two dissolved oxygen points with simultaneous local display and retransmission. AX48x is used with 9408 Series immersion, submersion and self-cleaning floating-ball sensors providing measurements with exceptional accuracy and performance.

AX400 Series analyzers are available for either wall-/pipe- or panel-mounting and are rated to IP65.

## High functionality as standard

All versions are supplied with two, fully isolated current outputs as standard, that can be assigned to the measured parameter, sample temperature or any appropriate calculated variables.

Three programmable relay set points are available that can also be assigned as required.

Innovative features such as a power-saving display and a diagnostic current output option all contribute to low cost of ownership.

## Plug-and-produce expanded control

An advanced function card provides an additional two current outputs and two further alarm relays that can be assigned to either measured values or sample temperature.

ABB plug-and-produce software automatically reconfigures the analyzer if an option board is added later. No user programming is necessary.

A real-time clock and logbook are also included, making the full-facility versions extremely powerful and versatile.

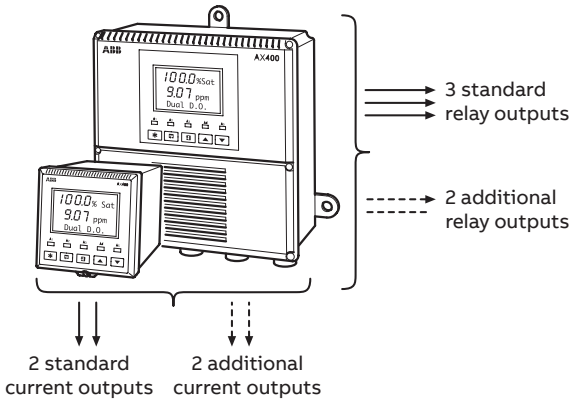


**AX400 outputs**

## Significantly reduced maintenance costs

The AX400 analyzers are supplied as standard for 85 to 265 V AC operation. There are no inner switches to set.

They can also be provided for 24 V AC or 12 to 30 V DC supply and recognize automatically which of the two supplies is being used. 24 V DC operation reduces maintenance costs significantly by negating the need for costly, yearly safety tests to ensure compliance with safety procedures.

## Energy saving display

The backlit display has been designed to operate in all types of environments and shows both the measured parameter(s) and, on a separate 16-character display line, diagnostic and computed information.

On dual-input analyzers both measured parameters are displayed simultaneously.

For conservation of energy, the backlight can be set to switch off automatically after 60 seconds of inactivity.

**Backlight can be set to switch off when inactive**

## Easy access installation terminals

Easy access to the terminations ensures rapid and cost-effective installation. The wall-/pipe-mount version has been designed to ensure that cable connection is simple and convenient. Ingress protection of the electronics section is retained even when the terminal compartment is opened.

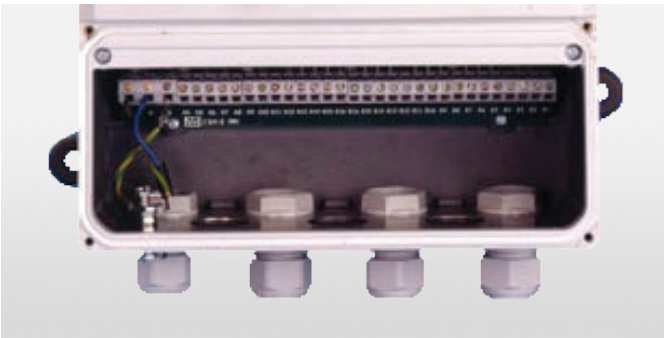

**AX400 termination chamber makes access easy**

## Cost savings with aeration lane zone control

Depending on the incoming load to large aeration tanks, the profile of horizontal oxygen can change considerably. Controlling the entire tank based solely on a final measurement can be extremely inefficient.

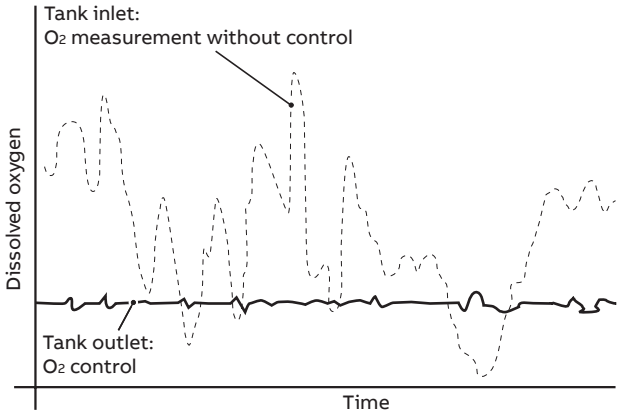


**Control in several zones saves costs**

Controlling several sections individually can considerably increase the tank capacity and bring additional savings in energy. The AX488 enables two continuous measurements from a single analyzer with simultaneous local display and retransmission.

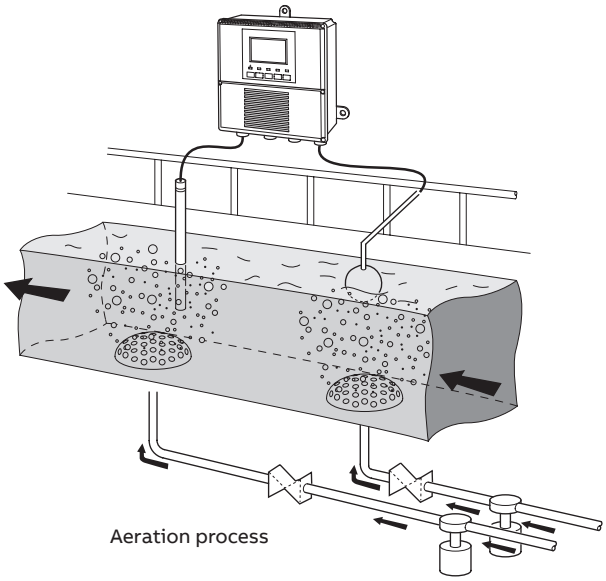


**Dual-input enables zone control for optimum tank capacity and reduced energy costs**

The AX488 operates as two separate analyzers, thus reducing initial expenditure, saving space and minimizing installation costs when compared to using two individual analyzers. This capability provides on-line validation of the process measurement.

Making two simultaneous measurements and configuring one of the set points as a difference alarm provides continuous on-line checking and early warning of malfunction of the measurement.

Alternatively, both measurements can be compared and an average value calculated and transmitted via the analog output.

In aeration lanes where four individual measurements are made, two AX488s can considerably reduce capital expenditure.

## On-line assurance of reliability

The AX48x displays a bar-graph of the sensor's output after calibration. This unique feature provides information on the sensor condition and enables maximum use of the sensor before replacement.

Sensor capsule replacement is a simple operation that can be carried out in a few minutes.

| Bars | Sensor output efficiency | |
|---|---|---|
| | > 85 % | Pass |
| | > 60 % | |
| | > 50 % | |
| | < 50 % low sensor efficiency | |

Bargraph sensor life indicator

## Reduced maintenance through in-line cleaning

Many installed sensors benefit from regular cleaning. When carried out manually, this can be laborious and costly – so is often ignored. Advanced AX48x analyzers make it possible to automate sensor cleaning of floating ball, immersion or submersible systems by using a programmable wash-timer contact to activate a cleaning agent valve or pump.

Efficient jet-spray cleaning control

Pulsed water-wash and jet-wash chemical clean actions are standard, user-selectable functions. The frequency and duration of the wash can be tuned to meet the needs of the application.

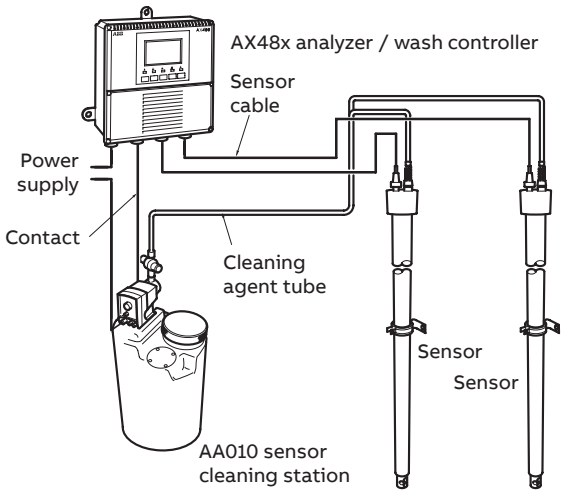


Efficient auto-cleaning control for one or two sensor systems

For chemical cleaning a 60 liter (13 gallon) sensor cleaning station can be supplied (model no. AA0010), complete with delivery pump and low level alarm. Chemical cleaning has proved particularly successful on potable drinking water plants where manganese and iron in the sample can create unacceptably high levels of maintenance. Effective cleaning reduces cost of ownership.

## Combined dissolved oxygen and pH or Redox (ORP)

The AX468 version measures pH or Redox (ORP) and dissolved oxygen with the same analyzer. The option board provides the capability to retransmit pH, dissolved oxygen and both sample temperatures. Five programmable alarms can be assigned to suit the needs of the application, enabling even the most demanding requirements to be met.

Simultaneous conductivity and pH measurement

## Confidence in service

To complement the well-proven design, unrivalled accuracy and reliability in service of the dissolved oxygen sensor, the entire sensing loop is regularly self-monitored for short circuits and temperature element faults. The instrument incorporates a nonvolatile memory, eliminating the need for battery back-up, and line-voltage supply filtering to minimize the effects of mains borne interference.

## Temperature compensation, salinity and pressure correction factor

The solubility of oxygen in water is affected by:

- sample temperature
- solution salinity
- atmospheric pressure

The AX48x analyzer uses a Pt100 temperature sensor to apply automatic compensation for the effects of temperature on the oxygen permeability of the sensor membrane. Parameters such as salinity in ppm and barometric pressure, or height above sea level, can also be entered during calibration to compensate for these effects.

## AX480 integral P, PI and PID control

The single input AX480 analyzers incorporate three-term PID control, offering three modes of sophisticated control: analog, pulse length (time proportional) and pulse frequency. These are supplied as standard and can be operated in direct- or reverse-acting mode, dependent upon the application.

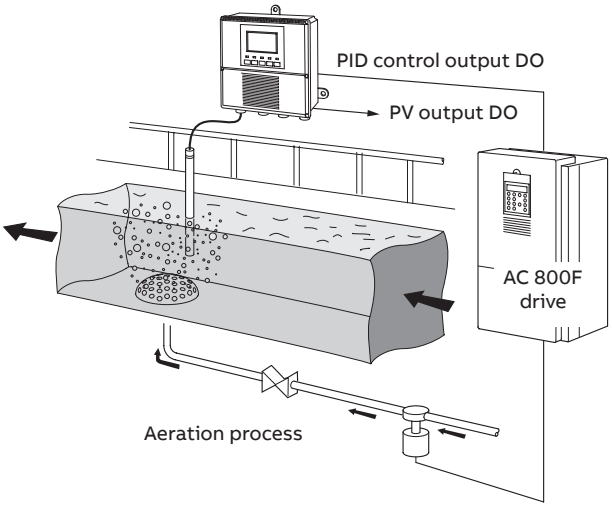


AX480 with integral PID controller

## ...AX480 integral P, PI and PID control

**Auto / Manual and bumpless transfer**
An auto / manual feature is incorporated for rapid manual access to the control functions. The controller facilitates bumpless transfer between manual and auto modes, providing the measured variable is within the proportional band and some integral action time has been programmed.

**Current output proportional control**
In this case, the control signal is provided by the 4 to 20 mA output of the AX480 analyzers rather than using the alarm / control contacts. The magnitude of the current output changes in proportion to the deviation from set point. This method is used generally with motorized valves or when controlling the speed of dosing pumps with a 4 to 20 mA proportional input.

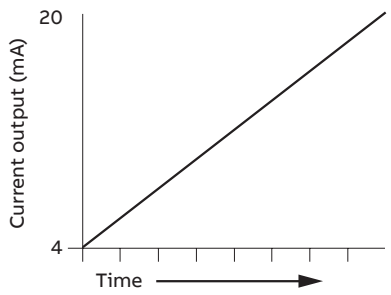


Current acting control

**Time proportioning control (pulse length)**
With time proportioning control, the AX480 analyzer's control signal output is in pulses, the duration of which changes in proportion to the system error. The pulses are delivered by varying the length of time that the alarm / control contact is activated.

Time proportioning control is used generally to control dosing by low-cost solenoid valves or metering pumps and is also known as pulse-length proportional or 'mark space' control.

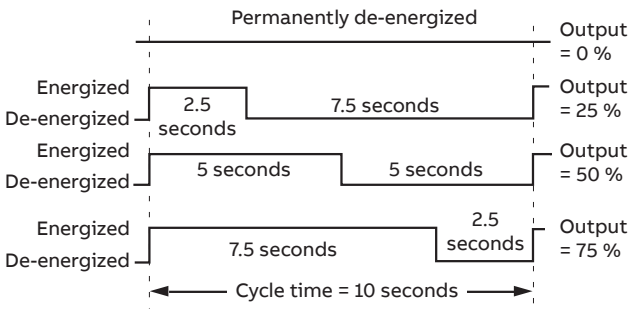


Time proportioning control

**Pulse-frequency proportional control**
Impulse pumps dosing chemical reagents are controlled easily by the AX480's pulse-frequency proportional control output. In this case, the pulse length of the alarm / control contact is fixed and the frequency of the delivered pulses increases in proportion to the system error, as set by the proportional band. Diaphragm metering pumps must have a remote pulse input capability in order to utilize this function.

Pulse-frequency control in the AX480 operates by pulsing a relay on for 300 ms and off for a period of time determined by the pulse frequency. The pulse frequency (PFr) is adjustable between 1 and 120 pulses per minute. The greater the difference between the measured variable and the set point the greater the pulse frequency.

**Example**
If the pulse frequency is set at 120 pulses per minute and the percentage output is 100 % then the pulse rate is 2 pulses per second. If the percentage output is reduced to 50 %, the pulse rate falls to one pulse per second.

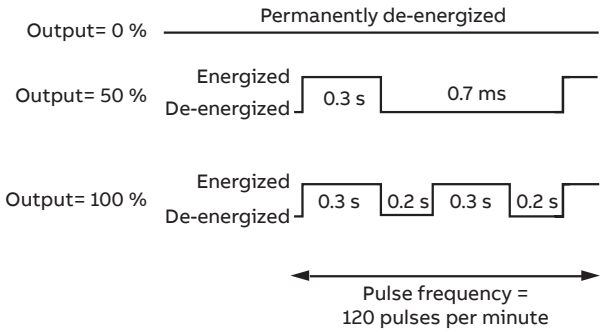


Pulse-frequency proportional control

**Power failure recovery**
In the event of a power failure the user can configure the control mode to be Auto, Manual or Last. This optimizes control conditions on power-up to ensure rapid recovery of process control.

## 9408 dissolved oxygen sensor systems

AX480, AX488 and AX468 dissolved oxygen analyzers are designed specifically to operate with the industry-proven, anti-fouling 9408 Series sensors.

Reliable monitoring of dissolved oxygen levels in waste treatment tanks can be hampered by sensor fouling with rags or other large solids. 9408 sensors can be supplied with anti-fouling, floating ball systems making rags and solids difficult to lodge. In addition, all 9408 systems can be equipped with a powerful jet-wash facility for removal of tough deposits.

Each sensor system includes an 8012-170 sensor capsule. This is mounted in a support tube with an integral temperature sensor for automatic temperature compensation and measurement. Maintenance simply involves a quick plug-in of a replacement capsule. Lifetime is typically 9 to 12 months and in many cases longer.

- Reduced sensor fouling
  - Large diameter, floating ball repels rags and coating
  - Optional jet-wash system for stubborn deposits
- Low maintenance, long-life sensor
  - No changing of electrolyte or membrane
  - Simple replacement, plug-in cartridge
- Simple calibration
  - Zero calibration is not essential
  - Simple, single-point air calibration
- Comprehensive mounting methods
  - Floating ball, immersion, submersion and flow-through systems available

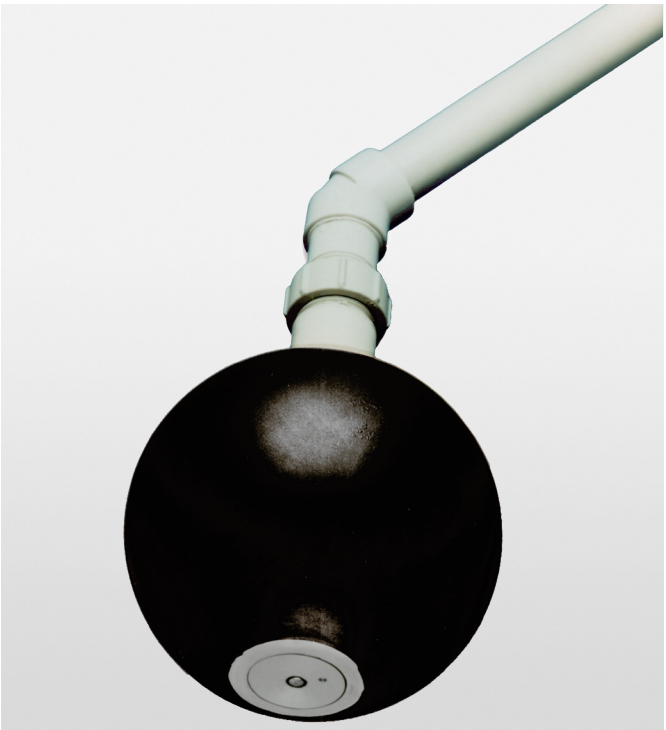

9408 floating ball system

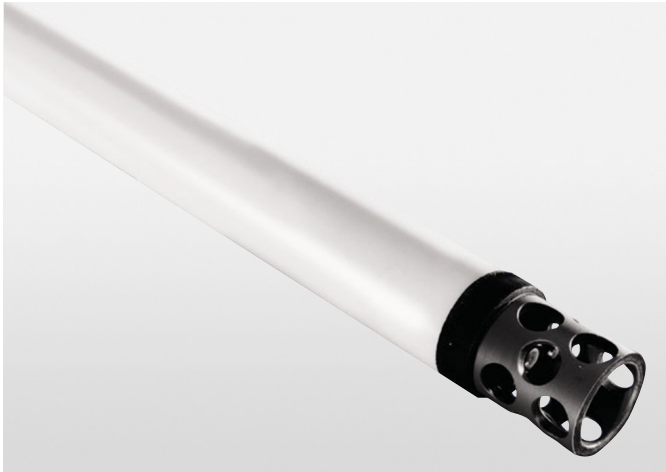

9408 immersion system

9408 submersible system

9408 flow-through cartridge system

# Specification – sensor sytems

## General

**Sensor**
8012-170 sensor capsule

**Response**
Typically 20 s for 90 % of a step-change of oxygen concentration at 20 °C (68 °F)

**Temperature compensation**
Automatic correction with integral Pt100 temperature sensor

**Operating temperature**
0 to 40 °C (32 to 104 °F)

**Operating pressure**
Atmospheric

**Minimum liquid velocity**
30 cm/s

**Accuracy**
±0.2 mg/l or ±2 % saturation within ±10 °C (±50 °F) of the calibration temperature in the range 0 to 35 °C (32 to 95 °F)

**Connection cable**
Part no. 0233-828

**Maximum length**
100 m (32.5 ft.)

## Floating ball systems

**Materials of construction**

| | |
|---|---|
| Support arm: | ABS plastic |
| Flotation collar: | polypropylene |
| Mounting bracket: | stainless steel |

**Mounting**
Pipe mounting: 50 mm (2 in.) OD

**Support arm length (9408-70x only)**
3 m (10 ft.)

## Immersion systems

**Materials of construction**
Polypropylene

**Mounting**
Wall-mounting bracket

**Immersion lengths**
1, 2 and 3 m (3.3, 6.6 and 10 ft.)

## Submersible systems

**Materials of construction**
Polypropylene

**Mounting**
Support chain (user supplied)

**Cable length**
8 m (26 ft.)

## Flow-through cartridge systems

**Operating pressure**
2 bar (30 psi)

**Minimum flow rate**
2 l/min

**Materials of construction**
Polypropylene

**Mounting**
Support chain (user supplied)

**Process connections**
- ½ in or 1 in BSP inlet and outlet
- ½ in or 1 in NPT inlet and outlet

**Cable lengths**
1, 3, 5, 10 and 20 m (3, 9, 15, 30 and 60 ft. approx.) standard lengths

# Specification – analyzers

## Dissolved oxygen – AX480, AX488 and AX468

**Range**

Programmable 0 to 250% saturation, 0 to 25 $mgl^{-1}$ or 0 to 25ppm

**Minimum span**

- 0 to 2 $mgl^{-1}$ or ppm
- 0 to 20% saturation

**Units of measure**

% saturation, $mgl^{-1}$ and ppm

**Resolution**

0.1 (% saturation), 0.01 ($mgl^{-1}$) or 0.01 (ppm)

**Accuracy**

1 (% saturation), 0.1 ($mgl^{-1}$) or 0.1 (ppm)

**Operating temperature range**

0 to 40 °C (32 to 104 °F)

**Temperature sensor input**

3-wire Pt100

**Salinity correction**

Automatic over the range 0 to 40 parts per thousand

**Auto sensor life indicator**

Indicates conditions of remaining sensor life

## pH/Redox – AX468 only

**Inputs**

- One pH or mV input and solution earth
- One temperature sensor
- Enables connection to glass or enamel pH and reference sensors and Redox (ORP) sensors

**Input resistance**

- Glass > 1 x $10^{13}\Omega$
- Reference 1 x $10^{13}\Omega$

**Range**

–2 to 16 pH or –1200 to +1200 mV

**Minimum span**

Any 2 pH span or 100 mV

**Resolution**

0.01 pH

**Accuracy**

0.01 pH

**Temperature compensation modes**

- Automatic or manual Nernstian compensation
  - Range –10 to 200 °C (14 to 392 °F)
- Process solution compensation with configurable coefficient
  - Range –10 to 200 °C (14 to 392 °F) adjustable –0.05 to 0.02 %/ °C (–0.02 to 0.009 %/ °F)

**Temperature sensor**

Programmable Pt100 (3-wire), Pt1000 & Balco 3k

**Calibration ranges**

Check value (zero point) 0 to 14 pH

**Slope**

Between 40 and 105 % (low limit user-configurable)

## Electrode calibration modes

**Calibration with auto-stability checking**

Automatic one or two point calibration selectable from:

- ABB
- DIN
- Merck
- NIST
- US Tech

Two x user-defined buffer tables for manual entry or two-point calibration or single-point process calibration

## Display

**Type**

Dual 5-digit, 7-segment, backlit LCD

**Information**

16-character, single line dot-matrix

**Energy-saving function**

Backlit LCD configurable as On or Auto Off after 60 s

**Logbook***

Electronic record of major process events and calibration data

**Real-time clock***

Records time for logbook and auto-manual functions

## Sensor cleaning function

**Configurable cleaning action relay contact**

Continuous or pulse in 1 s on and off times

**Frequency**

5 minutes to 24 hours, programmable in 15 minute increments up to 1 hour then in 1 hour increments for 1 to 24 hours

**Duration**

15 s to 10 minutes, programmable in 15 s increments up to 1 minute then in 1 minute increments up to 10 minutes

**Recovery period**

30 s to 5 minutes, programmable in 30 s increments

*Available if option board is fitted

# ...Specification – analyzers

## Relay outputs – on/off

**Number of relays**
Three supplied as standard or five with option board fitted

**Number of set points**
Three supplied as standard or five with option board fitted

**Set point adjustment**
Configurable as normal or failsafe high / low or diagnostic alert

**Hysteresis of reading**
Programmable 0 to 5 % in 0.1 % increments

**Delay**
Programmable 0 to 60 s in 1 s intervals

**Relay contacts**
- Single-pole changeover
- Rating 5 A, 115 / 230 V AC, 5 A DC

**Insulation**
2 kV RMS contacts to earth / ground

## Analog outputs

**Number of current outputs (fully isolated)**
Two supplied as standard or four with option board fitted

**Output ranges**
- 0 to 10 mA, 0 to 20 mA or 4 to 20 mA
- Analog output programmable to any value between 0 and 22 mA to indicate system failure

**Accuracy**
±0.25 % FSD, ±0.5 % of reading (whichever is the greater)

**Resolution**
0.1 % at 10 mA, 0.05 % at 20 mA

**Maximum load resistance**
750 Ω at 20 mA

**Configuration**
Can be assigned to either measured variable or either sample temperature

## Digital communications

**Communications**
Profibus DP (with option board fitted)

## Control function – AX480 only

**Controller type**
P, PI, PID (Configurable)

## Control outputs

**Output**
Can be assigned a maximum of two relays, two analog outputs or one of each

**Analog**
Current output control (0 to 100%)

**Time proportioning cycle time**
1.0 to 300.0 s, programmable in increments of 0.1 s

**Pulse frequency**
1 to 120 pulses per minute, programmable in increments of 1 pulse per minute

**Controller action**
Direct or reverse

**Proportional band**
0.1 to 999.9 %, programmable in increments of 0.1 %

**Integral action time (reset)**
1 to 7200 s, programmable in increments of 1 s (0 = Off)

**Derivative**
0.1 to 999.9 s programmable in increments of 0.1 s, only available for single set point control

**Auto / Manual**
User-programmable

## Access to functions

**Direct keypad access**
Measurement, maintenance, configuration,
- diagnostics or service functions
- Performed without external equipment or internal jumpers

## Mechanical data

**Wall- / pipe-mount versions**
- IP65 (not evaluated under UL certification)
- Dimensions (height, width, depth) 192 x 230 x 94 mm (7.56 x 9.06 x 3.7 in.)
- Weight 1 kg (2.2 lb.)

**Panel-mount versions**
- IP65 (front only)
- Dimensions (height, width, depth) 96 x 96 x 162 mm (3.78 x 3.78 x 6.38 in.)
- Weight 0.6 kg (1.32 lb.)

**Cable entry types**

| | | |
|---|---|---|
| Standard | – | 5 or 7 x M20 cable glands |
| N. American | – | 7 x knockouts suitable for ½ in. Hubble gland |

## Power supply

**Voltage requirements**

- 100 to 240 V AC, 50 / 60 Hz (90 V min. to 264 V max. AC)
- 12 to 30 V DC

**Power consumption**

10 W

**Insulation**

Mains to earth (line to ground) 2 kV RMS

## Environmental data

**Operating temperature limits**

–20 to 55 °C (–4 to 131 °F)

**Storage temperature limits**

–25 to 75 °C (–13 to 167 °F)

**Operating humidity limits**

Up to 95 % RH non-condensing

## EMC

**Emissions and immunity**

Meets requirements of:

- EN61326 (for an industrial environment)
- EN50081-2
- EN50082-2

## Approvals, certification and safety

**Safety approval**

UL

**CE Mark**

Covers EMC & LV Directives
(including latest version EN 61010)

**General safety**

- EN61010-1
- Overvoltage Class II on inputs and outputs
- Pollution category 2

## Languages

Languages configurable

- English
- French
- German
- Italian
- Spanish

## Overall dimensions

Dimensions in mm (in.)

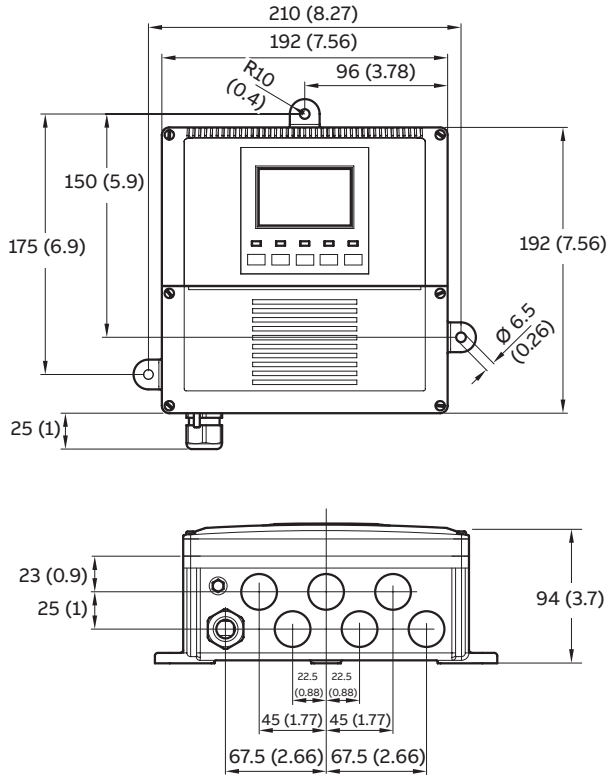


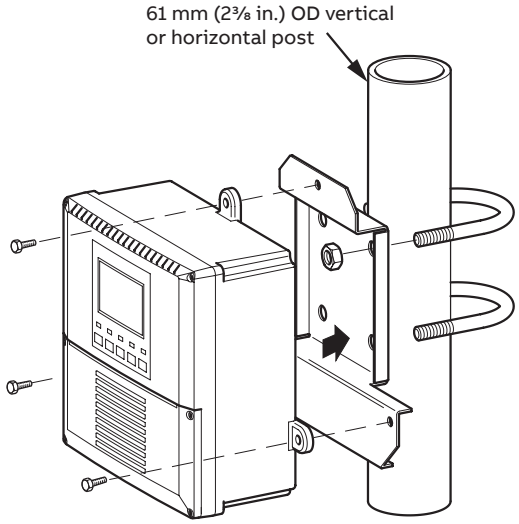


Pipe-mount detail

Wall- / Pipe-mount version

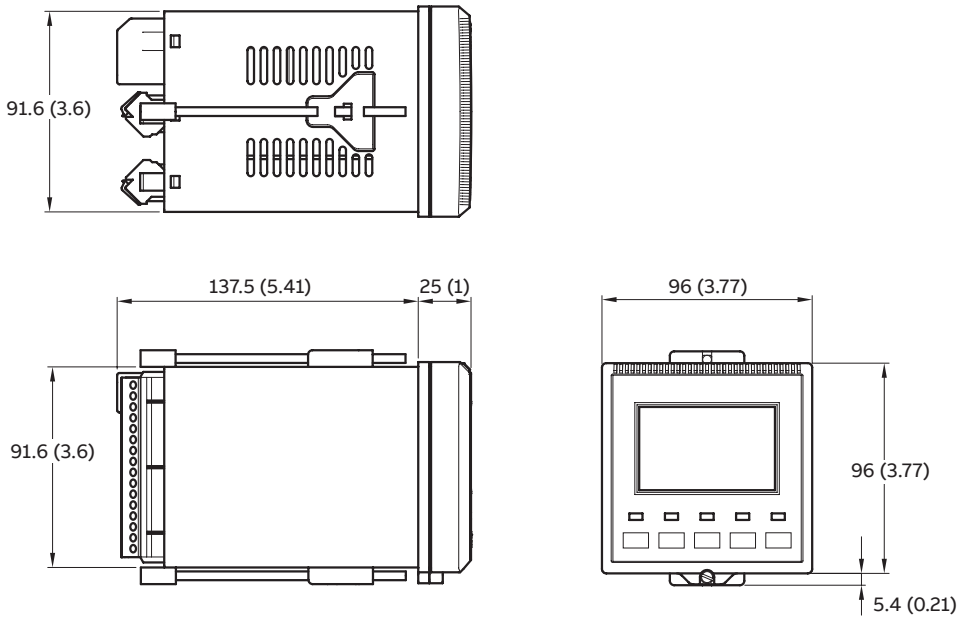


Panel-mount version

## Electrical connections

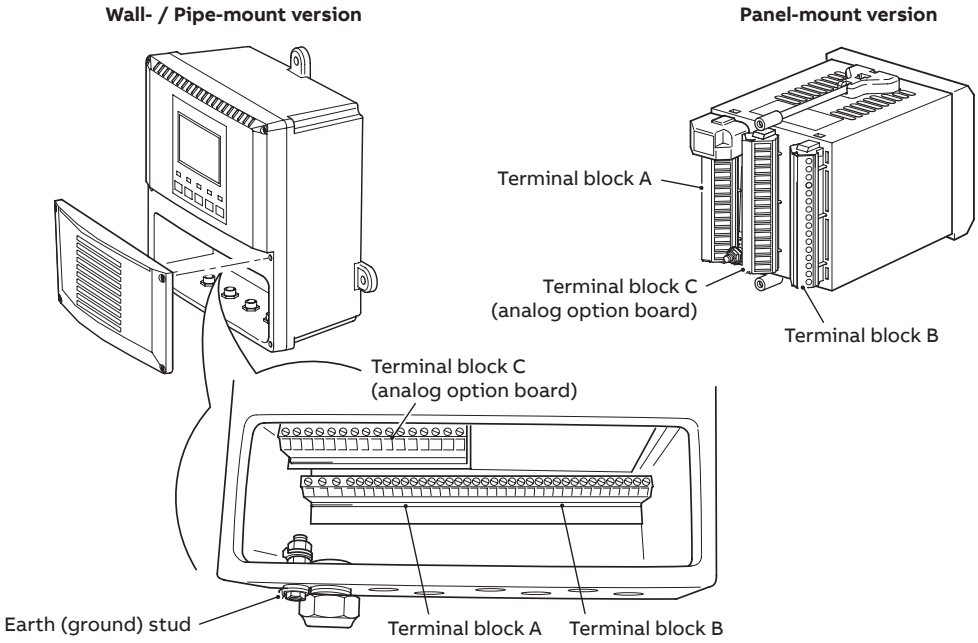


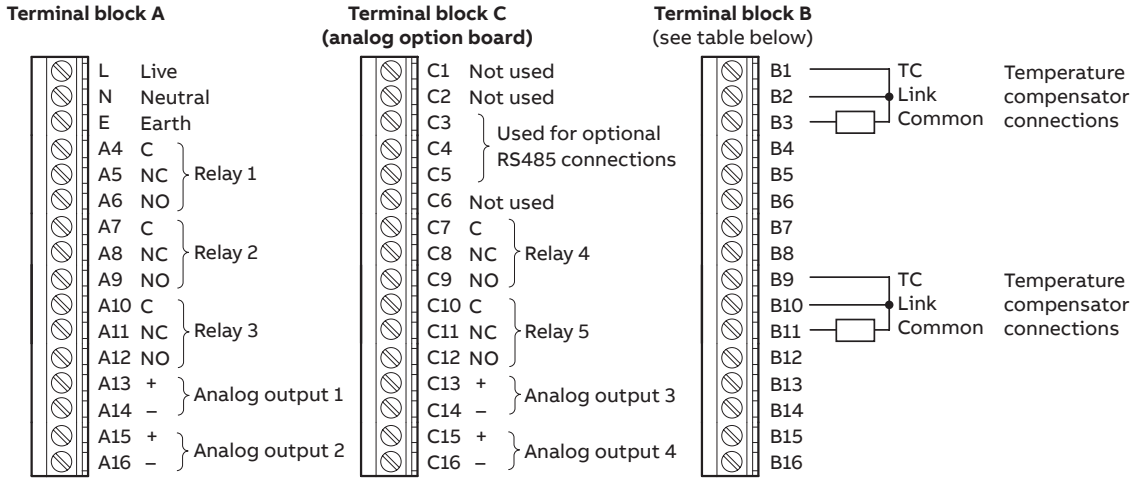


| Terminal block B | | |
|---|---|---|
| **Sensor B** | **Sensor A** | **Sensor connections** |
| B1 | B9 | Temperature compensator common (yellow) |
| B2 | B10 | Temperature compensator third lead (green) |
| B3 | B11 | Temperature compensator (black) |
| B4 | B12 | Sensor +ve (red) |
| B5 | B13 | Sensor –ve (blue) |
| B6 | B14 | Screen |
| B7 | B15 | Not used |
| B8 | B16 | Not used |

## Ordering information – analyzers

| **Single and dual input analyzers for dissolved oxygen and pH/Redox (ORP) models AX480, AX488 and AX468** | **AX4** | **X** | **X** | **X** | **X** | **X** | **0** | **X** |
|---|---|---|---|---|---|---|---|---|
| **First process variable (PV1)** | | | | | | | | |
| Conductivity 0 to 10,000 µS $cm^{-1}$ for 2-electrode sensors | | 1 | | | | | | |
| Conductivity 0 to 1,999 mS $cm^{-1}$ for 4-electrode sensors | | 3 | | | | | | |
| Conductivity USP<645> for 2-electrode sensors | | 5 | | | | | | |
| pH/Redox (ORP) | | 6 | | | | | | |
| Dissolved oxygen | | 8 | | | | | | |
| **Second process variable (PV2)*** | | | | | | | | |
| No second process variable – select for PID control of PV1 | | | 0 | | | | | |
| Conductivity 0 to 10,000 µS $cm^{-1}$ for 2-electrode sensors | | | 1 | | | | | |
| Conductivity 0 to 1,999 mS $cm^{-1}$ for 4-electrode sensors** | | | 3 | | | | | |
| Conductivity USP<645> for 2-electrode sensors | | | 5 | | | | | |
| pH/Redox (ORP) | | | 6 | | | | | |
| Dissolved oxygen | | | 8 | | | | | |
| **Enclosure types** | | | | | | | | |
| **Wall-mount IP65, general** | | | | | | | | |
| Wall-mount – cable glands fitted | | | | 1 | | | | |
| Pipe-mount | | | | 2 | | | | |
| **Wall-mount IP65, North American** | | | | | | | | |
| Wall-mount | | | | 6 | | | | |
| Pipe-mount | | | | 7 | | | | |
| **Panel-mount, universal** | | | | | | | | |
| Panel-mount** | | | | 5 | | | | |
| **Advanced functions and communications** | | | | | | | | |
| Basic (2 current outputs + 3 relays) | | | | | 0 | | | |
| Advanced (4 current outputs + 5 relays + logbook) | | | | | 1 | | | |
| Profibus DP, basic (2 current outputs + 3 relays)** | | | | | 2 | | | |
| Profibus DP, advanced (4 current outputs + 5 relays + logbook)** | | | | | 3 | | | |
| **Power supply** | | | | | | | | |
| 100 to 240 V AC 50 / 60 Hz | | | | | | 0 | | |
| 12 to 30 V DC | | | | | | 1 | | |
| **Reserved** | | | | | | | 0 | |
| **Manual** | | | | | | | | |
| English | | | | | | | | 1 |
| French | | | | | | | | 2 |
| Italian | | | | | | | | 3 |
| German | | | | | | | | 4 |
| Spanish | | | | | | | | 5 |

* When ordering units with a second process variable (PV2) the code digit for PV2 in the order code number must be equal to, or greater than, the code digit for PV1 (for example, AX416 is permissible, AX461 is not permissible).

** Profibus DP is not available in panel-mount housing when 0 to 1,999 mS/cm is selected as the second process variable (PV2).

## Ordering information – sensor systems

| **9408 sensor systems** | **9408** | **XX** | **X** |
|---|---|---|---|
| **Floating ball systems** | | | |
| Floating ball system – complete | | 70 | |
| Floating ball kit (metric) support arm supplied by user | | 75 | |
| Floating ball kit (imperial) support arm supplied by user | | 76 | |
| **Immersion systems** | | | |
| Immersion system length 1 m (3.3 ft.) | | 71 | |
| Immersion system length 2 m (6.6 ft.) | | 72 | |
| Immersion system length 3 m (10 ft.) | | 73 | |
| **Submersible systems** | | | |
| Supplied with 8 m (26 ft.) of fixed cable | | 60 | |
| Without cleaning | | | 0 |
| Jet wash | | | 2 |

| **9408 sensor systems** | **9408** | **X** | **X** | **X** | **X** |
|---|---|---|---|---|---|
| **Flow-through cartridge** | | 8 | | | |
| **Process connection** | | | | | |
| 1 in. BSP | | | 0 | | |
| ½ in BSP | | | 1 | | |
| 1 in NPT | | | 2 | | |
| ½ in NPT | | | 3 | | |
| **Cable length** | | | | | |
| 1 m (3.3 ft.) | | | | 0 | |
| 3 m (10 ft.) | | | | 1 | |
| 5 m (15 ft.) | | | | 2 | |
| 10 m (32 ft.) | | | | 3 | |
| 20 m (64 ft.) | | | | 4 | |
| **Jet wash** | | | | | |
| Without cleaning | | | | | 0 |
| Jet wash | | | | | 2 |

## Acknowledgements

PROFIBUS is a registered trademark of PROFIBUS and PROFINET International (PI).

Sales

Service

Castel Maggiore (BO) 40013
Via Lirone 60/i

e-mail: info@eurotecsrl.com
Tel: +39 051/6321595
Website: www.eurotecsrl.com

C.F.: 04103780377
P.I.: 01596581205

—

**ABB Limited**
**Measurement & Analytics**
Oldends Lane, Stonehouse
Gloucestershire, GL10 3TA
UK
Tel: +44 (0)1453 826 661
Fax: +44 (0)1453 829 671

**ABB Inc.**
**Measurement & Analytics**
125 E. County Line Road
Warminster, PA 18974
USA
Tel: +1 215 674 6000
Fax: +1 215 674 7183

**abb.com/measurement**

—

We reserve the right to make technical changes or modify the contents of this document without prior notice. With regard to purchase orders, the agreed particulars shall prevail. ABB does not accept any responsibility whatsoever for potential errors or possible lack of information in this document.

We reserve all rights in this document and in the subject matter and illustrations contained therein. Any reproduction, disclosure to third parties or utilization of its contents – in whole or in parts – is forbidden without prior written consent of ABB.

© Copyright 2018 ABB.
All rights reserved.

3KXA496401R1001

DS/AX4DO-EN Rev. K 03.2018