ABB MEASUREMENT & ANALYTICS | DATA SHEET

# Aztec AWT440

## Multi-input transmitter

# Measurement made easy

## Universal transmitter for up to 4 digital sensors

### Easy to use

- plug-and-play digital sensor connection using EZLink technology
- automatic sensor recognition and set-up
- intuitive software with full-color display

### Cost effective

- connect up to 4 digital sensors
- field upgradeable enabling additional sensors to be added
- advanced predictive maintenance diagnostics

### Improved reporting

- full audit trail capability for improved regulatory compliance
- secure data archiving to SD card or USB stick
- archived data can be analyzed using ABB's DataManager Pro data review software

### Flexible communications

- **optional digital communications including Ethernet, Profibus DP or MODBUS**

## The Aztec 400 range

The Aztec AWT440 multi-input transmitter is designed for use with ABB's Aztec 400 range of advanced digital sensors for monitoring the key parameters in municipal and industrial water / wastewater treatment.

The transmitter and sensors feature ABB's EZLink technology, a plug-and-play connection and configuration method that makes the Aztec 400 the easiest-to-use and maintain monitoring system on the market today.

The AWT440 utilizes the latest technology to provide a highly reliable yet flexible monitoring system that meets the demands of today's users.

The Aztec AWT440 transmitter featuring EZLink technology offers:

- Plug-and-play multiple sensor connection
- Automatic sensor recognition and set-up
- Advanced predictive maintenance diagnostics
- Enhanced measurement accuracy due to the lowest electrical noise interference
- Data logging and graphical process trending
- Full audit trail capability
- SD card / USB stick data download capability
- Flexible communications including Ethernet, Profibus and MODBUS protocols

## The AWT440 multi-input transmitter

The AWT440 is a multi-input transmitter for use with up to 4 ABB digital sensors.

Featuring ABB's EZLink technology, users of this system benefit from plug-and-play connectivity, automatic sensor recognition / set-up and predictive diagnostics.

Analysis and signal conditioning is conducted within the robust sensor housing and transmitted digitally to the AWT440 transmitter where measurement data and diagnostic information is recorded and clearly viewed on the full color graphical display. Process data can be securely archived via the inbuilt SD card reader or USB port.

Users can operate the system easily thanks to the AWT440's powerful, yet intuitive software with a number of user-selectable communication options including Ethernet, Profibus DP V1.0 or Modbus RS485; enabling simple device integration.

The robust IP66 corrosion-resistant enclosure is suitable for either wall- or pipe-mounting within non-hazardous areas.

## Easy to use

Operation simplicity is a key feature of the AWT440. The powerful, yet user-friendly software enables easy, intuitive device interaction. Common operation is straightforward, with clear menus presenting options for setting parameters and viewing diagnostic information.

## Easy sensor connect with EZLink

Up to 4 digital sensors can be connected to the AWT440 transmitter using ABB's EZLink technology. Installation and commissioning is simplified with plug-and-play digital sensor connections and automatic sensor recognition and set-up.

**Fig. 1 EZLink sensor connections**

## Graphical trending

Measurement trends of each sensor can be easily and clearly viewed locally on the graphical color display.

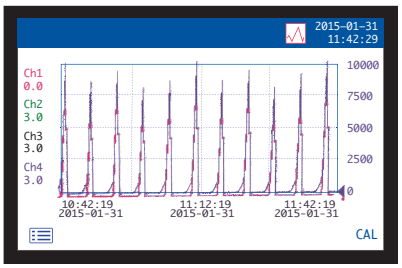


## Full audit trail capability

The AWT440 transmitter records all data continuously to its internal memory. This includes both event log / configuration data in addition to measurement data. The transmitter's event log files contain audit log, alarm log, diagnostic log and calibration log data that is time- and date-stamped, providing the operator with full audit trail capability.

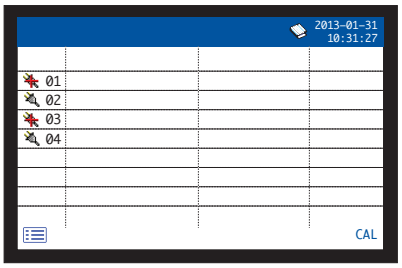


**Fig. 2 Audit log**

## Secure data archiving to SD card or USB stick

Process data and historical logs can be securely archived to a either an SD card or USB stick for record keeping or analysis using ABB's DataManager Pro data analysis software.

**Fig. 3 SD card / USB stick access**

## Flexible communications

The AWT440 transmitter features a number of user-selectable communication options, enabling simple device integration.

**Digital communications**

The AWT440 can be equipped with PROFIBUS DP V1.0 or Modbus RS485 to enable full communications and control integration with distributed control systems. These options can be configured when purchased or retrofitted in the field to expand existing functionality due to the simple plug-in design.

**Ethernet**

The AWT440 can provide 10BaseT Ethernet communications via a standard RJ45 connector and uses industry-standard protocols TCP/IP and HTTP. The use of standard protocols enables easy connection into existing PC networks.

**Embedded web server**

The AWT440 has an embedded web-server that provides access to measurement readings and active diagnostics. The use of HTTP enables standard web browsers to view the data.

**Email notification**

Via the AWT440's built-in SMTP client, the transmitter is able to email notification of important events. Emails triggered from alarms or other critical events can be sent to multiple recipients.

## Mounting options

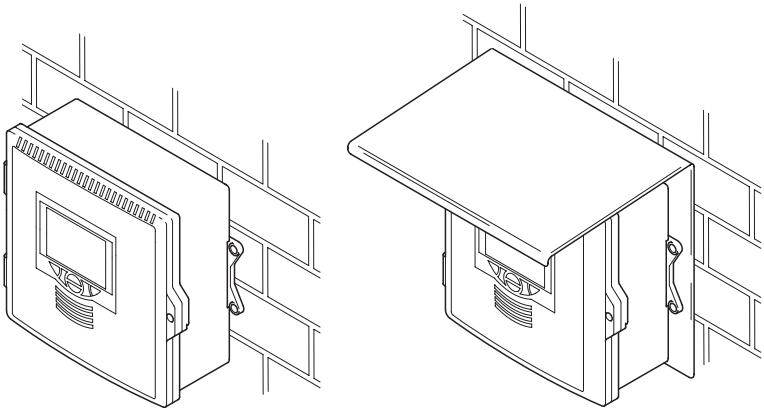

**Wall-mounting**

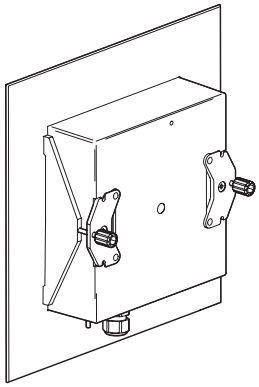

**Panel-mounting**

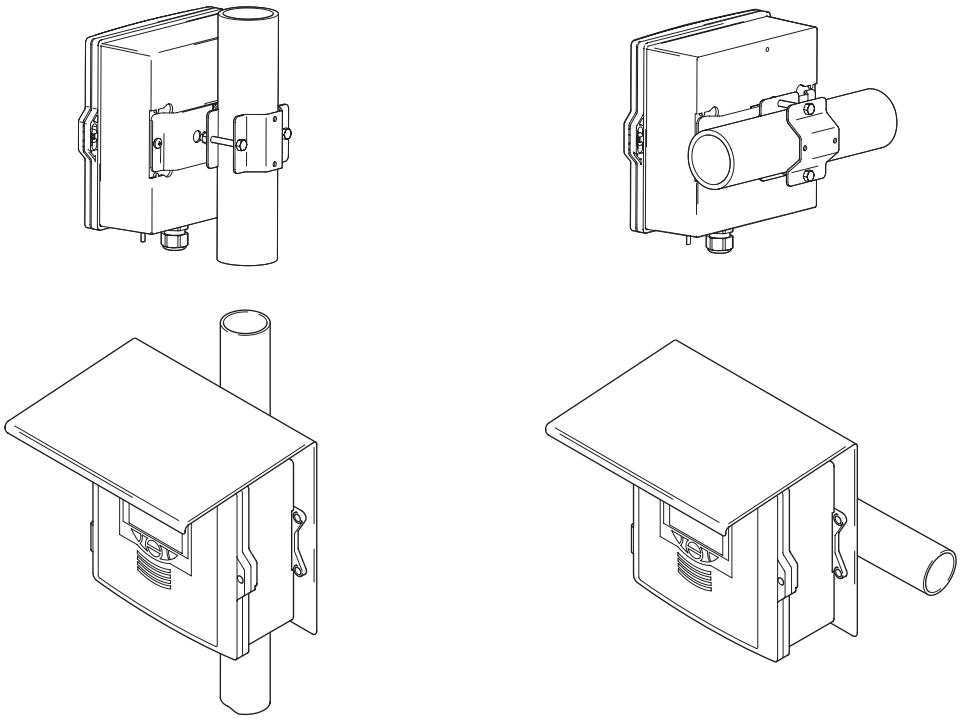

**Pipe-mounting**

# Specification

## Operation

**Display**

89 mm (3.5 in.) color 1/4 VGA TFT, liquid crystal display (LCD) with built-in backlight and brightness / contrast adjustment

**Language**

English, German, French, Italian, Spanish

**Keypad**

- 6 tactile membrane keys:
- Group select / left cursor, view select / right cursor, menu key, up, down, enter key

**No. of inputs**

Up to 4 sensors

## Mechanical data

**Protection**

IP66 / NEMA 4X

**Dimensions**

- Height – 194 mm (7.64 in.) minimum (excluding glands)
- Width – 214 mm (8.42 in.) door closed – minimum
- Depth – 98 mm (3.85 in.) door closed – minimum (excluding fixing brackets)
- Weight – 1.5 kg (3.3 lb)

**Panel dimensions**

- Cut-out height – 186 +1.1 –0 mm (7.32 +0.04 –0 in.)
- Cut-out width – 186 +1.1 –0 mm (7.32 +0.04 –0 in.)
- Thickness – 6 mm (0.236 in.) maximum
- Distance between cut-outs – 40 mm (1.57 in.) minimum

**Materials of construction**

Glass-filled polycarbonate

## Security

**Password protection**

- Calibrate and Advanced – user-assigned
- Service level access – factory-set

## Electrical

**Power supply ranges**

100 to 240 V AC ±10 %, 50 / 60 Hz
(90 min. to 264 V max. AC, 45/65 Hz)

**Optional**

24 V DC (18 min. to 36 V max. DC)

**Power consumption**

<30W

**Terminal connections rating**

AWG 26 to 16 (0.14 to 1.5 mm2)

## Analog outputs

- 2 standard
- 2 optional
- Galvanically isolated from the rest of the circuitry, 500 V for 1 minute. Range-programmable source and range 0 to 22 mA, maximum load 750 W @ 20 mA

## Relay outputs

- 4 standard
- 2 optional
- Fully-programmable
  Contacts rated at 2A @ 110 / 240 V
  Standard relays are changeover
  Optional relays are normally closed (NC)

## Digital inputs / outputs

- 6 standard, user-programmable as input or output
- Minimum input pulse duration: 125 ms
- Input – volt-free or 24 V DC (conforms to IEC 61131-2)
- Output – open-collector, 30 V, 100 mA max. (conforms to IEC 61131-2)

## Connectivity / communications (optional)

**Ethernet**

TCP/IP, HTTP

**Profibus**

DPV1

**MODBUS**

RTU RS485

# ...Specification

## Data logging

**Storage**

- Measurement value storage (programmable sample rate)
- Audit log*, Alarm log*, Calibration log, Diagnostics log

**Chart view**

On local display

**Historical review**

Of data

**Data transfer**

SD card interface / USB stick – Windows-compatible FAT file system, data and log files in Excel and DataManager Pro compatible formats

## Environmental data

**Ambient operating temperature:**

–10 to 55 ºC (14 to 131 ºF)

**Ambient operating humidity:**

Up to 95 % RH non-condensing

**Storage temperature:**

–20 to 85°C (–4 to 185 °F)

## Approvals, certification and safety

**Safety approval**

cULus

**CE mark**

Covers EMC & LV Directives (including latest version EN 61010)

**General safety**

- EN61010-1
- Pollution degree 2
- Insulation class 1

## EMC

**Emissions & immunity**

Meets requirements of IEC61326 for an industrial environment and domestic emissions

*Audit log and Alarm log data are stored in the same log file.

# Dimensions

Dimensions in mm (in.)

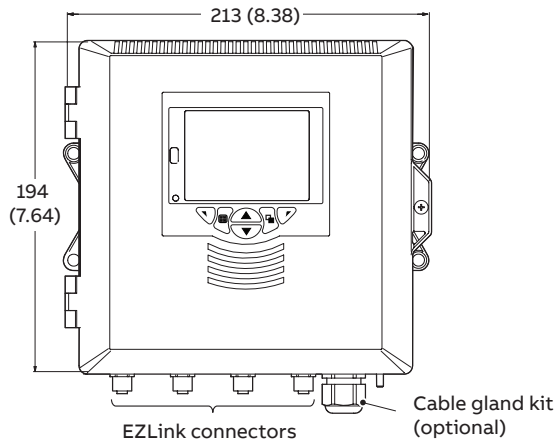


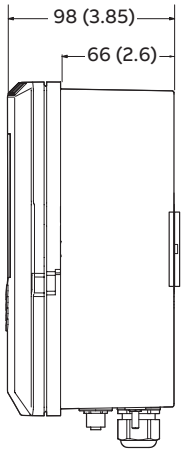


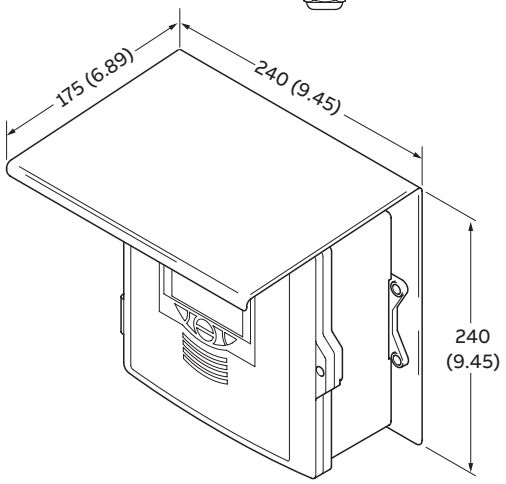


**Weather shield dimensions**

## Electrical connections

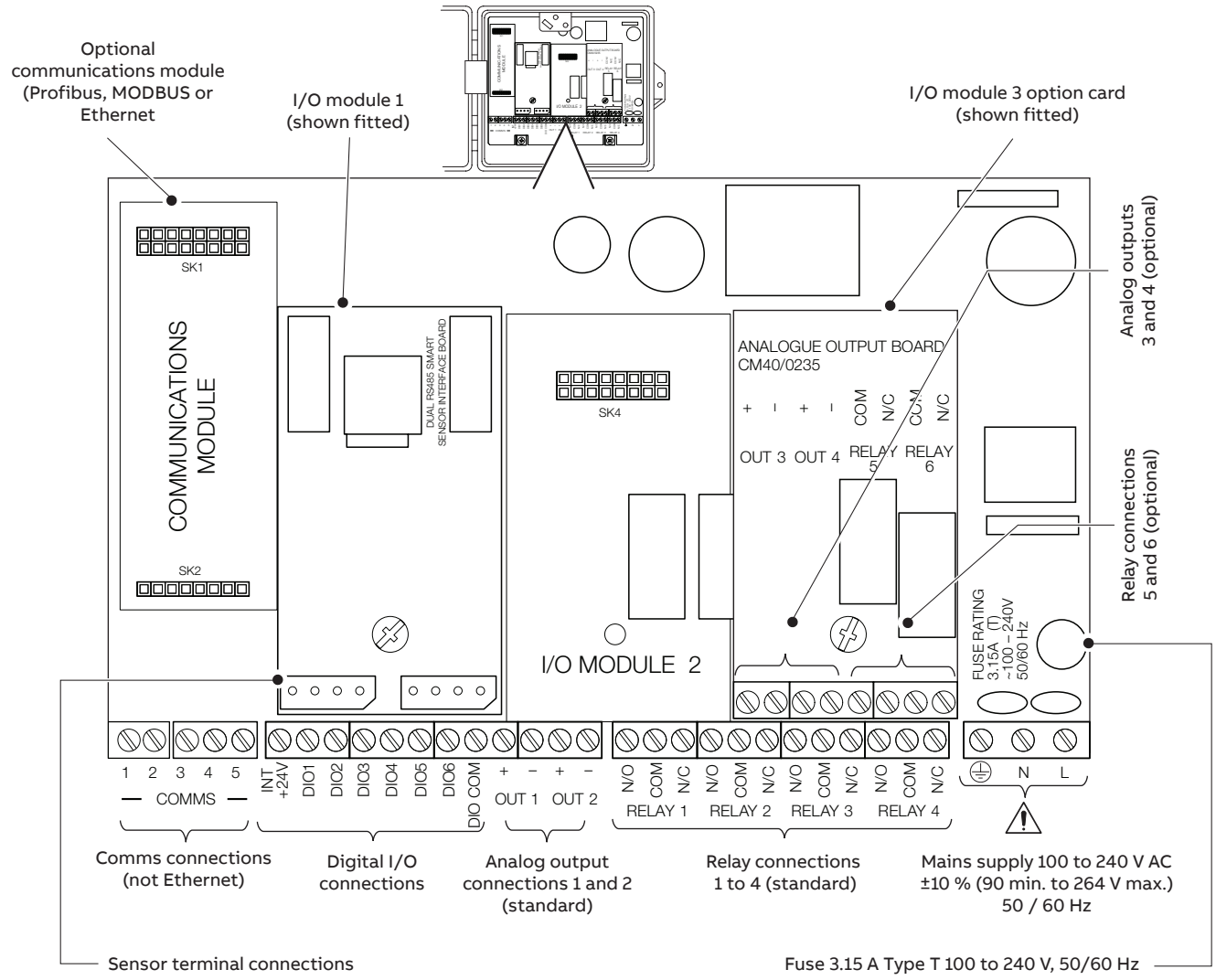


### Relays and analog outputs

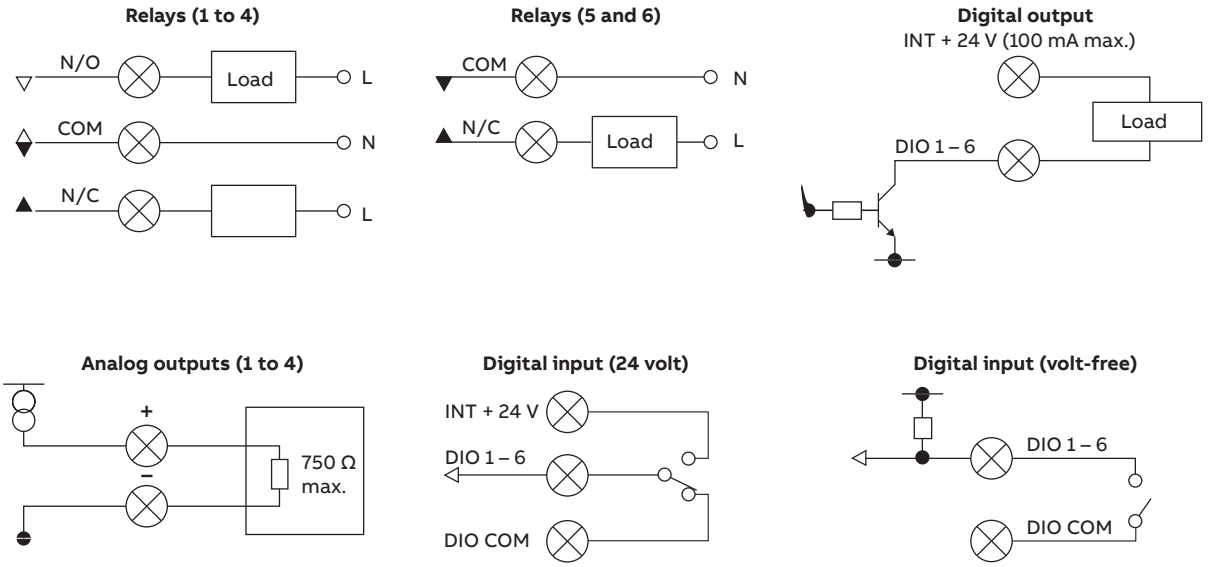

## Ordering information

| | Main code | | | | | | | | | Options | | | |
|---|---|---|---|---|---|---|---|---|---|---|---|---|---|
| **Aztec AWT440 multi-input transmitter** | **AWT440/** | **X** | **X** | **X** | **XX** | **XX** | **XX** | **XX** | **XX** | **XX** | **XX** | **XX** | **XX** |
| **Build revision** | | | | | | | | | | | | | |
| Reserved | | A | | | | | | | | | | | |
| **Enclosure type** | | | | | | | | | | | | | |
| Wall mount | | | 1 | | | | | | | | | | |
| **Display type** | | | | | | | | | | | | | |
| Color (standard) | | | | A | | | | | | | | | |
| **Power supply** | | | | | | | | | | | | | |
| 90 to 260 V AC, 50 / 60 Hz | | | | | 1 | | | | | | | | |
| 18 to 36 V DC | | | | | 2 | | | | | | | | |
| **Channel 1** | | | | | | | | | | | | | |
| 2 digital sensor inputs (EZLink) | | | | | | D2 | | | | | | | |
| **Channel 2** | | | | | | | | | | | | | |
| Additional 2 digital sensor inputs (EZLink) | | | | | | | D2 | | | | | | |
| Without | | | | | | | Y0 | | | | | | |
| **Output signal** | | | | | | | | | | | | | |
| Standard (2 current outputs + 4 relays) | | | | | | | | Y0 | | | | | |
| Additional output card (provides 2 additional current outputs + 2 relays) | | | | | | | | Y2 | | | | | |
| **Communications** | | | | | | | | | | | | | |
| Without | | | | | | | | | Y0 | | | | |
| Ethernet | | | | | | | | | E1 | | | | |
| Profibus DPV1 | | | | | | | | | D1 | | | | |
| MODBUS | | | | | | | | | M1 | | | | |
| **Data storage** | | | | | | | | | | | | | |
| Without | | | | | | | | | | Y0 | | | |
| SD card function | | | | | | | | | | D1 | | | |
| SD card function with SD card | | | | | | | | | | D2 | | | |
| USB function | | | | | | | | | | D8 | | | |
| **Optional ordering code** | | | | | | | | | | | | | |
| Add one or more of the following codes after the standard ordering information to select any additional options if required. | | | | | | | | | | | | | |
| **Accessories** | | | | | | | | | | | | | |
| Pipe-mount kit | | | | | | | | | | | A1 | | |
| Panel-mount kit | | | | | | | | | | | A2 | | |
| Weather shield | | | | | | | | | | | A3 | | |
| Pipe-mount + weather shield | | | | | | | | | | | A4 | | |
| **Test certificate** | | | | | | | | | | | | | |
| Test certificate | | | | | | | | | | | | CD | |
| **Documentation language (supplied as standard in English)** | | | | | | | | | | | | | |
| German | | | | | | | | | | | | | M1 |
| Italian | | | | | | | | | | | | | M2 |
| Spanish | | | | | | | | | | | | | M3 |
| French | | | | | | | | | | | | | M4 |
| English | | | | | | | | | | | | | M5 |
| **Cable entry options** | | | | | | | | | | | | | |
| Metric gland pack (9 glands) | | | | | | | | | | | | | U1 |

## Acknowledgements

Windows and Excel are registered trademarks of Microsoft Corporation in the United States and/or other countries.

Sales Service Software

Castel Maggiore (BO) 40013
Via Lirone 60/i

e-mail: info@eurotecsrl.com
Tel: +39 051/6321595
Website: www.eurotecsrl.com

C.F.: 04103780377
P.I.: 01596581205

—

**ABB Limited**
**Measurement & Analytics**
Howard Road, St. Neots
Cambridgeshire, PE19 8EU
UK
Tel: +44 (0)870 600 6122
Fax: +44 (0)1480 213 339
Mail: enquires.mp.uk@gb.abb.com

**ABB Inc.**
**Measurement & Analytics**
125 E. County Line Road
Warminster, PA 18974
USA
Tel: +1 215 674 6000
Fax: +1 215 674 7183

**abb.com/measurement**

We reserve the right to make technical changes or modify the contents of this document without prior notice. With regard to purchase orders, the agreed particulars shall prevail.
ABB does not accept any responsibility whatsoever for potential errors or possible lack of information in this document.

We reserve all rights in this document and in the subject matter and illustrations contained therein.
Any reproduction, disclosure to third parties or utilization of its contents – in whole or in parts – is forbidden without prior written consent of ABB.

© Copyright 2017 ABB.
All rights reserved.

DS/AWT440-EN Rev. C 06.2017