ABB MEASUREMENT & ANALYTICS | DATA SHEET

Aztec ATS430

Turbidity and total suspended solids sensor

Measurement made easy

Certified turbidity measurement for regulatory effluent discharge consent monitoring

Easy to use

- EZLink plug-and-play digital sensor connection
- Automatic sensor recognition and set-up
- Advanced predictive maintenance diagnostics
- Supplied factory-calibrated ready for use

Accurate and reliable

- Robust construction in stainless steel or titanium
- Scratch-resistant sapphire windows
- Adaptive TSS calibration feature for improved process control
- MCERTS approved

- **Low cost-of-ownership**
- No servicing for the lifetime of the sensor
- In-situ cleaning
- Easy calibration and verification

Flexible installation options

- Suitable for pipe, tank, open channel or flow-cell installation
- Suitable for use in salt water

The Aztec 400 range

The Aztec 400 range of advanced digital sensors are designed for monitoring the key parameters in municipal and industrial water / wastewater treatment.

Featuring ABB's EZLink technology, the sensors offer plug-and-play measurement with ABB's latest digital transmitters to create the easiest-to-use and maintain monitoring systems on the market today.

Analysis and signal conditioning is conducted within the robust sensor housing and transmitted digitally to the transmitter.

The Aztec 400 range of digital sensors with EZLink offer:

- plug-and-play digital sensor connection
- automatic sensor recognition and set-up
- advanced predictive maintenance diagnostics
- enhanced measurement accuracy due to minimal
- electrical noise interference

ABB's latest range of digital transmitters featuring EZLink offer:

- multiple sensor connection
- data logging and graphical process trending
- full audit trail capability
- SD card / USB stick data download capability
- flexible communications including Ethernet, PROFIBUS®, MODBUS® and analog outputs

Figure 1 AWT440 transmitter

Aztec ATS430 turbidity and TSS sensor

The ATS430 is a compact, yet extremely robust turbidity sensor capable of measuring turbidity and total suspended solids (TSS) concentrations up to 4000 NTU or 100,000 mg/l.

Available in stainless steel or titanium these rugged sensors are suitable for use in a wide range of process control applications. The stainless steel version with optional integral cleaning is ideal for general water and wastewater applications, whereas the titanium version can be used in aggressive or corrosive environments, including brine, seawater or high salinity media.

Analysis and signal conditioning is conducted within the robust sensor housing and transmitted digitally to the transmitter.

Featuring ABB's EZLink technology, simplified calibration and service-free design, users of this system benefit from simple operation, enhanced accuracy and the lowest cost-of-ownership.

Applications

Typical applications for the Aztec ATS430 turbidity and TSS sensor include:

- potable water treatment
- Municipal / industrial wastewater treatment
- food and beverage process control
- Pulp & Paper process control
- marine applications

Accurate and reliable measurement

The Aztec ATS430 turbidity and TSS sensor uses the latest advancements in optical measurement technology to provide an extremely stable and accurate measurement system that maintains calibration and operates without drift.

Measurement principle

The ATS430 uses nephelometric measurement technology in accordance with EN ISO 7027 (DIN EN 27027 or ISO 7027). Providing accurate measurement of turbidity concentrations up to 4000 NTU and can also be used to determine the total suspended solids (TSS) content in the sample.

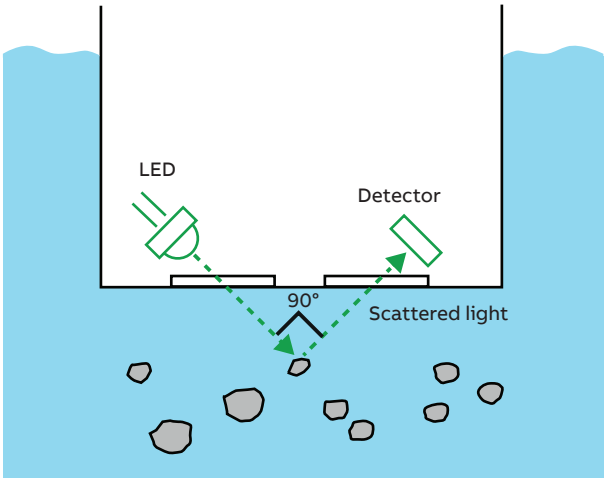

Figure 2 ATS430 probe uses internationally approved nephelometric measurement to provide accurate turbidity measurement

Adaptive TSS Calibration

Obtaining a reliable calibration for suspended solids from laboratory measurement data is not necessarily a straightforward task. The 'Adaptive TSS Calibration' feature within the ATS430 overcomes this issue and provides a smooth TSS conversion based on process history. It uses a weighted cumulative average to approximate the accuracy of a linear fit over a large set of data. This avoids sudden changes in TSS calibration coefficients often caused by non-representative sampling or erroneous lab results.

Rugged design

The robust ATS430 sensors are available in polished stainless steel or titanium and feature scratch-resistant sapphire optical windows to withstand harsh environments up to 60 °C (140 °F) and pressures up to 10 bar (145 psi).

Automatic cell cleaning

The ATS430 is available with an auto-clean system to maintain accuracy in high-fouling environments. The integral wiper assembly that is available on the stainless steel models physically wipe the optical surfaces at user-programmable intervals.

The highly efficient automatic cleaning process overcomes the problem of optical fouling and ensures that performance can be maintained for extended periods without the need for manual intervention.

Figure 3 Auto-clean system overcomes optical fouling

Trusted performance

The ATS430 has been certified by the UK Environment Agency under its Monitoring Certification Scheme (MCERTS).

Easy-to-use and maintain

The Aztec ATS430 turbidity and suspended solids sensor features ABB's EZLink technology to provide plug-and-play measurement with ABB's latest digital transmitters.

EZLink

No wiring, no complicated sensor set-up or configuration; simply connect the sensor using the EZLink connection and the transmitter configures the sensor set-up automatically.

Factory-calibrated

Each sensor is precisely calibrated at the factory so it is ready to use straight out of the box.

No servicing for the lifetime of the sensor

The ATS430 features a fully encapsulated and hermetically sealed design. This means that there are no O-rings, seals or gaskets to periodically replace.

If a wiper system is fitted the ATS430 monitors usage and alerts the user when replacement is due. Wiper replacement is simple and takes a matter of seconds.

Figure 4 EZLink sensor connection

Simple to calibrate

The ATS430's performance can be easily verified with ABB's sensor verification and calibration kit. Each kit is provided with a range of different calibration discs that have been calibrated against primary turbidity standards at the factory.

Simple, safe and cost-effective. The ATS430 sensor verification and calibration kit removes the need for the use of chemical standards that can be difficult to prepare, costly and hazardous.

Furthermore, as the kit can be used across different ATS430 sensors and each calibration disk can be reused, it is extremely cost effective.

Figure 5 ATS430 sensor verification and calibration kit

The benefits of using the ATS430 sensor verification and calibration kit include:

- Minimum analyzer downtime
  - Simple and fast procedure to verify analyzer performance.
- Low cost-of-ownership
  - Reduce usage of consumable chemical standards and the time taken to prepare such standards.
- Minimize employee's exposure to Formazine
  - Formazin is highly toxic and a suspected carcinogen.
- Repeatable and reliable
  - Removes any chemical standard preparation errors.
- Simple to use
  - Simply place the appropriate calibration disc into the holder, add a small droplet of optical coupling agent to the optical window of the turbidity sensor and insert into the holder.

Figure 6 ATS430 easy calibration procedure

Mounting options

ABB offer a range of mounting options for the Aztec ATS430 sensor.

Item	Mounting option
A	Open channel mounting kit: ATS4000768, suitable for floor/wall (surface) mounting (ATS4000720 chain mounting kit available separately)
B	Wall mounting accessory: ATS4000700, suitable for 40 mm / 1.25 in. dia dip pole
C	Dip pole assembly (supplied with 40 mm dia pole): ATS4000750: 2.5 m (8.2 ft) straight ATS4000716: 2.5 m (8.2 ft) 90° bend ATS4000719: 2.5 m (8.2 ft) 45° bend Dip pole mounting adaptor kits (to attach to user-supplied pole) ATS4000751: for attachment to 40 mm dia or 1.25 in. NB pole (straight) ATS4000710: for attachment to 1.25 in. NB pole (90° bend) ATS4000711: for attachment to 1.25 in. NB pole (45° bend) ATS4000714: for attachment to 40 mm dia pole (90° bend) ATS4000715: for attachment to 40 mm dia pole (45° bend) **Note**. Handrail mounting brackets are not supplied with this kit and must be purchased separately.
D	Open tank flanged dip mount: ATS4000785, for mounting on user-supplied mounting bracket
E	Wiper arm protective shroud assembly: ATS4000725
F	Flow cell pipeline mount kit: ATS4000765, suitable for wall / surface mounting (includes wall mounting clip)
G	Handrail mounting bracket – swivel / tilt action: ATS4000762 for 1.25 in. NB dip pole, suitable for 42 or 51 mm (1.7 or 2.0 in.) dia. handrail ATS4000763 for 40 mm dia dip pole, suitable for 42 or 51 mm (1.7 or 2.0 in.) dia. handrail
H	Handrail mounting bracket – tilt action: ATS4000760 for 40mm or 1.25 in. dia dip pole, suitable for 42 or 51 mm (1.7 or 2.0 in.) dia handrail
I	Retractable insertion assembly: ATS4000780, maximum pressure 10 bar (145 psi), for mounting on user-supplied flange: BS EN 1092-1, Type 01B, DN50, PN16, stainless steel 316L or similar. Maximum distance from flange sealing face to pipe I/D must not exceed 70 mm (2.75 in.).

Table 1 ATS430 sensor mounting / cleaning options

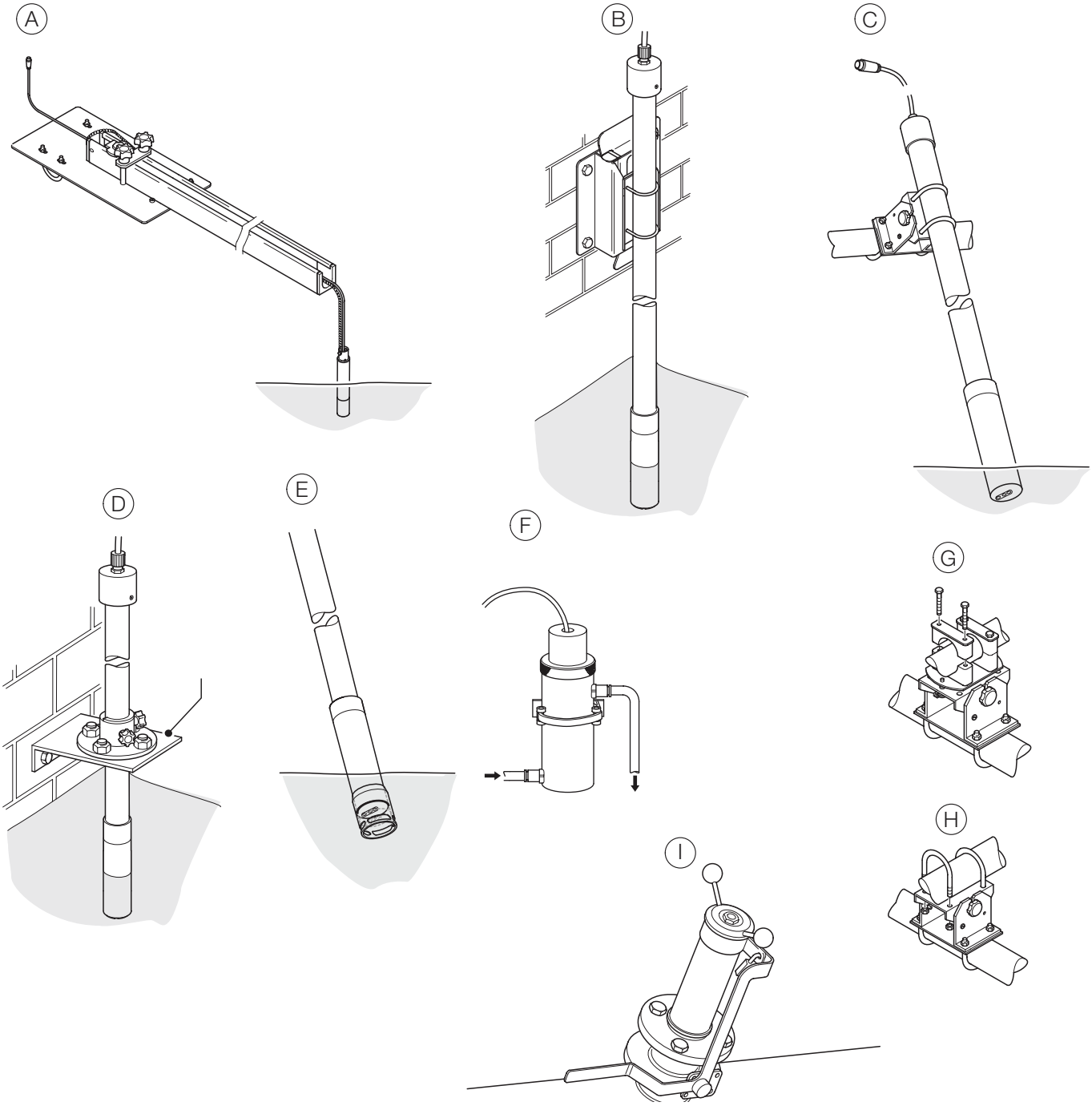

Figure 7 Mounting options

Specification

Sensor type

Optical nephelometric turbidity and suspended solids sensor

Sensor

IP rating

IP68

Range

Turbidity: 0 to 4000 NTU

Suspended solids: dependent on sample:

- up to 5000 mg/l kaolin
- up to 15000 mg/l Fullers earth
- up to 100,000 mg/l SiO2

Accuracy[1,2]

- Turbidity: <±2 % measured value
- Suspended solids: dependent on sample

Repeatability and limit of detection

- Repeatability[1]: <1 %
- Limit of detection[3]: 0.006 NTU

Display resolution

- Turbidity: 0.001 NTU
- Suspended solids: 0.001 mg/l

Response time

T90 < 30 s with filtering disabled

Storage conditions

–5 to 70 °C (23 to 158 °F)

Operating temperature

0 to 60 °C (32 to 140 °F)

Operating pressure

Up to 10 bar (145 psi) for metal versions

Dimensions

- 40 mm (1.57 in.) diameter
- 180 mm (7.08 in.) length

Weight

- Stainless steel: approx. 0.65 kg (1.43 lb) without cable
- Titanium: approx. 0.4 kg (0.88 lb) without cable

Power

Consumption (maximum)

100 mA @ 24 V DC

Cable

Fixed length

1 or 10 m (3.28 or 32.8 ft.)

EZLink digital sensor connector IP rating

IP67 (when connected)

Extension cable (options)

1, 5, 10, 15, 25, 50 m (3.2, 16.4, 32, 49.2, 82, 164 ft.)

Maximum length (including optional extension cable)

Up to 210 m (826 ft.)

Methods

ISO7027:1999, Water Quality – Determination of turbidity

Materials of construction

Stainless steel version

316 Stainless Steel, Viton, Noryl (wiper version only), Sapphire and F08 Epoxy

Titanium version

Titanium grade 2, Sapphire and F08 epoxy

Sensor flow cell body

ABS

Retractable insertion assembly

Parts in contact with sample

Stainless steel (316/1.4408), Viton, TFM™1600

[1] Tested in accordance with MCERTS: Performance Standards and Test Procedures for Continuous Water Monitoring Equipment. Version 3.1: Environment Agency 2010.

[2] ±0.1 NTU for measurement below 5 NTU, provided an accurate calibration is performed to compensate for environmental interferences. To achieve the best accuracy at low levels a two-point calibration is advised.

[3] Tested in accordance with BS ISO 15839: 2003.

Dimensions

All dimensions in mm (in.)

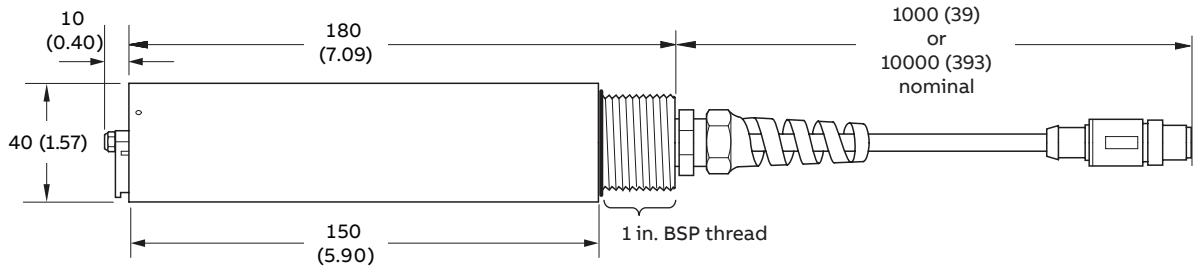

Figure 8 Sensor

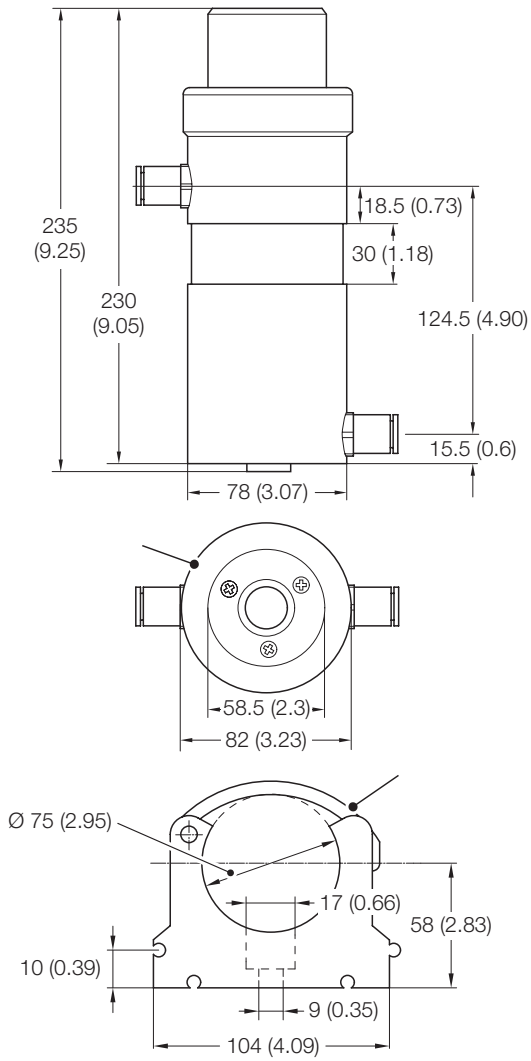

Figure 9 Flowcell

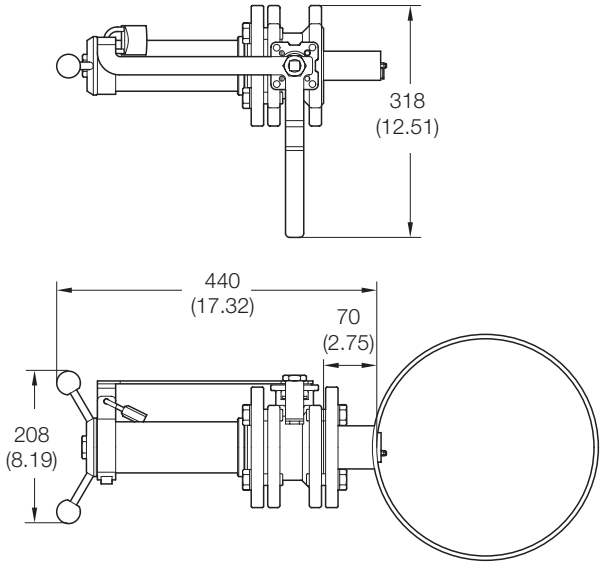

Figure 10 Retractable insertion assembly

Ordering information

	Main code				Options			
Aztec ATS430 turbidity sensor	**ATS430/**	**X**	**X**	**XX**	**XX**	**XX**	**XXX**	**XX**	**XXX**
Build revision									
Reserved		A							
Sensor type									
Stainless steel			1						
Stainless steel with wiper			2						
Titanium			3						
Cable length									
1 m (3.2 ft.) cable				A1					
10 m (32.8 ft.) cable				A2					
Documentation language									
German					M1				
Italian					M2				
Spanish					M3				
French					M4				
English					M5				
Optional ordering code									
Add one or more of the following codes after the standard ordering information to select any additional options if required.									
Accessories									
Sensor verification and calibration kit						A4			
Calibration pot for use with formazine						A5			
Wiper arm protection shroud						A6			
Mounting options									
Dip pole assemblies									
Dip pole assembly (straight), metric 2.5 m (8.2 ft)							BA1		
Dip pole assembly (90° bend), metric 2.5 m (8.2 ft)							BA4		
Dip pole assembly (45° bend), metric 2.5 m (8.2 ft)							BA5		
Dip pole mounting adaptor kits (to attach to user-supplied pole)									
Pole mounting adaptor kit (Straight) for attachment to 40 mm or 1.25 in. NB pole							BD1		
Pole mounting adaptor kit (90°) for attachment to 1.25 in. NB pole							BD2		
Pole mounting adaptor kit (45°) for attachment to 1.25 in. NB pole							BD3		
Pole mounting adaptor kit (90°) for attachment to 40 mm pole							BD4		
Pole mounting adaptor kit (45°) for attachment to 40 mm pole							BD5		
Dip pole mounting brackets									
Wall mounting bracket for dip pole (40 mm or 1.25 in. NB)							BB1		
Handrail mounting bracket (Tilt) for dip pole (40 mm or 1.25 in. NB), suitable for 42 or 51 mm (1.7 or 2.0 in.) dia. handrail							BB2		
Handrail mounting bracket (Swivel & Tilt) for dip pole (1.25 in. NB), suitable for 42 or 51 mm (1.7 or 2.0 in.) dia. handrail							BB5		
Handrail mounting bracket (Swivel & Tilt) for dip pole (40 mm), suitable for 42 or 51 mm (1.7 or 2.0 in.) dia. handrail							BB6		
Open tank flanged mount for dip pole (40 mm or 1.25 in. NB)							BT1		
Chain mount options									
Open channel mounting kit supplied with 3 m (9.8 ft.) chain							BB3		
Chain fitting adaptor kit supplied with 3 m (9.8 ft.) chain							BB4		
Pipe mount options									
Flow cell							BF1		
Retractable insertion assembly							BH1		
Certification									
Calibration certificate								CD	
EZLink digital sensor extension cable									
1 m (3.2 ft)									E01
5 m (16.4 ft)									E05
10 m (32.8 ft)									E10
15 m (49.2 ft)									E15
25 m (82 ft)									E25
50 m (164 ft)									E50

Acknowledgements

MODBUS is a registered trademark of the Modbus-IDA organization.
PROFIBUS is a registered trademark of PROFIBUS organization.

Sales

Service

Castel Maggiore (BO) 40013
Via Lirone 60/i

e-mail: info@eurotecsrl.com
Tel: +39 051/6321595
Website: www.eurotecsrl.com

C.F.: 04103780377
P.I.: 01596581205

—

ABB Limited
Measurement & Analytics
Howard Road, St. Neots
Cambridgeshire, PE19 8EU
UK
Tel: +44 (0)870 600 6122
Fax: +44 (0)1480 213 339
Mail: enquires.mp.uk@gb.abb.com

ABB Inc.
Measurement & Analytics
125 E. County Line Road
Warminster, PA 18974
USA
Tel: +1 215 674 6000
Fax: +1 215 674 7183

abb.com/measurement

We reserve the right to make technical changes or modify the contents of this document without prior notice. With regard to purchase orders, the agreed particulars shall prevail.
ABB does not accept any responsibility whatsoever for potential errors or possible lack of information in this document.

We reserve all rights in this document and in the subject matter and illustrations contained therein. Any reproduction, disclosure to third parties or utilization of its contents – in whole or in parts – is forbidden without prior written consent of ABB.

© Copyright 2017 ABB.
All rights reserved.

3KXA867400R1001

DS/ATS430-EN Rev. G 11.2017