ABB MEASUREMENT & ANALYTICS | DATA SHEET

AP200

Rugged pH/Redox (ORP) sensor systems with rapid temperature response for critical processes

Measurement made easy
Ruggedness without compromise

Safe operation and high process resistance
- PPS Ryton™ body operates to 6 bar (90 psi) and 130 °C (266 °F)

Empowers just-in-time maintenance
- integral solution earth rod for sensor diagnostics with advanced instrumentation

Reduced maintenance costs
- incorporated jet-wash enables autocleaning

Reduced running costs
- solid electrolyte provides high resistance to poisoning, plugging and pumping

High assurance of operation and calibration
- rapid integral temperature sensor
- balanced sensor element positioning

Increased user-flexibility
- industry standard VarioPin connection permits simple interchange of sensors

Wide range of applicability
- chemicals & petrochemicals
- pharmaceuticals
- pulp & paper
- water and waste-water treatment
- food & beverage

Rugged sensor system with low cost of ownership

The AP200 pH/Redox system is designed to provide high reliability and withstand the toughest environments for process monitoring and control.

The rugged assembly is built to bear the rigours of weather and process. Parts in contact with the process comprise chemically resistant PPS Ryton™ and stainless steel, or PPS Ryton™ and Hastelloy C. Flow-through holders are available in polypropylene, while the PPS Ryton™ insertion adapter enables installation in alternative material pipelines.

Insertion and Flow-through systems tolerate temperatures up to 130 °C (266 °F) and pressures up to 6 bar (90 psi). The inner electrode connections are ingress-protected to IP67/NEMA 6P (exceeds NEMA 4X).

The heartbeat of the AP200 System is the AP120 combination electrode. With high process integrity it delivers low running costs and low replacement outlay.

Just-in-time maintenance

One of the most vulnerable times for a pH electrode is during reintroduction into the line. Analyzers with advanced diagnostic facilities, such as ABB's TB8xPH or AX400 series, can detect sensor breakages as they occur. In addition, they can detect sensors 'out-of-process' and several reference faults. These valuable facilities enable just-in-time maintenance.

The AP200 holder is equipped with an integral solution earth facility. This provides high stability of measurement and enables the transmitter to supply full sensor diagnostics.

Reduced maintenance through in-line cleaning

50% of pH sensors in chemical processes benefit from regular cleaning. When done manually, this can be laborious and costly – so is often ignored. The AP200 makes it possible to automate sensor cleaning, driven by advanced Analyzers such as ABB's AX400 or TB84PH.

The AP200 system earth rod also serves as a jet-spray head enabling the user to supply a periodic burst of cleaning agent across the sensor. This is delivered through two nozzles, one directed at the measuring element and the other at the reference junction.

An aggressive, but little-and-often approach, keeps the sensor in prime condition, even in gypsum-laden scrubber applications.

Generally, water is a good solvent but, on other occasions, use of an acid, alkali or even detergent is beneficial.

Simple handling without special tools

Each sensor system is protected from the elements by a flip-top cap. Simple click-to-lock or dismount provides quick access to the electrode cable and optional cleaning agent delivery tube.

Attachment to process lines is simply performed with the union nut mechanism. Integral lugs facilitate dismounting without handling the pH electrode and bayonet connectors fix the sheath in place. No special tools are required.

The inner core is an electrode block common to all formats of holder system; insertion, immersion and flow-through. This enables easy interchanging and simplifies stocking.

Solution earth rod for sensor diagnostics

Dual jet-spray enables auto-cleaning

Easy access without special tools

pH/Redox (ORP) combination sensor with rapid temperature response for critical processes – AP120

The AP120 is a series of highly process-resistant 12 mm combination pH/Redox (ORP) electrodes used in the AP200 system. Some of the benefits available to users are:

- Exceptional resistance to poisoning and pressure
- IP67 (NEMA 6P) ingress protection
- High corrosion resistance and steam sterilizability
- Assured high accuracy of calibration and operation
- Rapid response enabling tighter process control
- Unparalleled resistance to plugging
- Extended life and improved performance

Exceptional process resistance

AP120 electrodes are equipped with a rugged solid electrolyte providing effective resistance to process poisons and fluctuating pressures. This far outstrips the performance of lesser, gelled-slurry type electrodes. The sensor is also backed with an annular, PTFE junction giving excellent dirt-repellence.

Balanced pH, reference and temperature

pH electrodes use temperature compensation for both measuring and reference elements. The location of the compensator is often a compromise, being either close to one element or the other. Plastic-shafted sensors, with the compensator at the rear, often have very slow responses – up to 30 minutes. This means that a calibration performed immediately after removal from a hot process could be incorrect.

The AP120 electrode has all three elements very closely located and a very fast temperature response. This ensures high integrity of calibration and leads to tighter control.

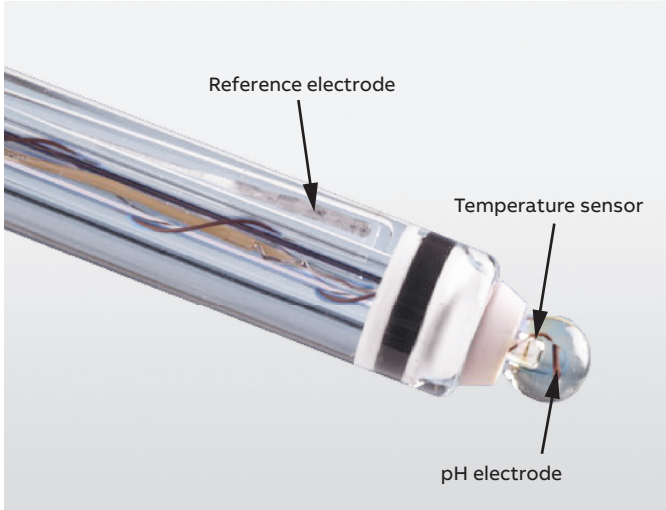

Balanced position of sensing elements

AP120 pH/Redox (ORP) combination sensor

Industry-standard VarioPin cable connector

Already a number of years in service, the proven multi-pole VP connector facilitates easy connection and disconnection of multi-parameter sensor signals.

Protected to IP67/NEMA 6P (exceeds NEMA 4X), and suitable for steam sterilization, the sensor connector is a real tough performer.

Having been adopted by a number of analytical sensor suppliers, the high-integrity connection enables easy interchangeability of supply.

High-integrity multi-parameter connector

Model AP201 insertion system

AP201 is an in-line insertion system for pipes and tanks. Process connection is achieved with an R1¼ in. (tapered BSP male) or NPT male adapter. Process-wetted parts are PPS Ryton™ and stainless steel. Maintenance access is by G1¼ in. (BSP) union nut and bayonet fittings.

Model AP201 insertion system

Model AP202 flow-through system

AP202 provides an additional polypropylene flow-through holder for installation in bypass lines.

The unit is equipped with Rp1 in. (BSP female) process connections.

Maintenance access is by union nut and bayonet fittings without special tools.

Model AP202 flow-through system

Model AP203 immersion (dip) system

Mounting in tanks and channels is achieved with AP203 polypropylene immersion holder systems in 1, 2 or 3 m (3.3, 6.6 or 10 ft.) lengths. Dip length is adjustable on-site enabling the system to match actual process needs. Two flange-mounted locking screws enable the holder to be decoupled from the process without detaching the flange.

The mounting flange has both DN50 and ANSI 2 in. mounting holes providing flexibility of installation possibilities.

A dip guard protects the electrode from damage during maintenance. When removed, in the reverse position it provides a key to detach the electrode block from the system without the operator handling the electrode.

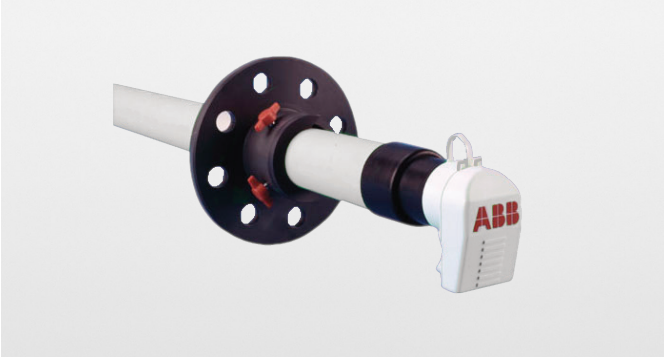

Model AP203 immersion (dip) system

AA010 sensor cleaning station

The AA010 cleaning station provides everything in one neat package to deliver powerful, chemical or water, jet-wash cleaning for your AP200 system. It includes a chemical dosing pump with fault-indicating relay (N/C) and pressure relief valve. The cleaning fluid is delivered from a 60 liter polyethylene tank via 10 m (32.5 ft.) of 6 mm (0.24 in.) OD PE tubing and injection valve to the sensor system.

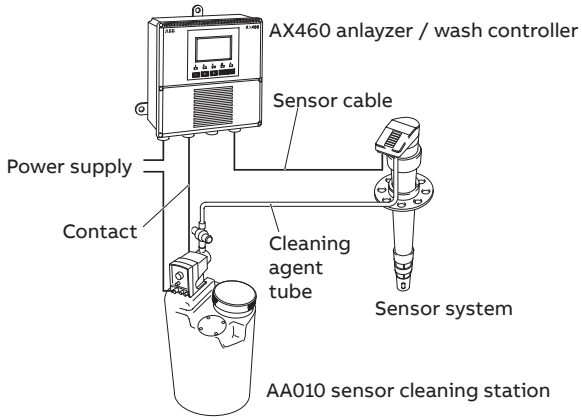

Model AA010 sensor cleaning station.

Specification – all systems

Materials

Shaft and cap
Polypropylene
Sensor body
Ryton™ PPS
Ground rod / spray tube
316 Stainless steel

Jet-wash facility

Non-return function
Integral one-way valve
Spray tube connection
6mm compression fitting
Recommended operating pressure
Minimum of 1 bar (15 psi) above process pressure

Certification

The systems comply with SEP (Safe Engineering Practice) level Pressure Equipment Directive 97123/EC

Specification – AP201 insertion system

Maximum temperature

PPS and steel adapters
130 °C (266 °F)
Polypropylene adapter
90 °C (194 °F)

Maximum pressure

6 bar (90 psi) @ 25°C (77°F)

Process connections

Union nut
G1¼ in. (BSP)
PPS process adapter
R1¼ in. (tapered BSP male)
PP process adapters
- R1¼ in.
- 1¼ in. NPT

Stainless steel adapters
- R1 in. (tapered BSP male)
- 1 in. NPT

Stainless steel sockets
- Angled DN25
- Straight DN25

Specification – AP202 flow-through system

Materials

Flow-cells
- Polypropylene
- Stainless steel

Maximum temperature

Polypropylene flow cell
90 °C (194 °F)
Stainless steel flow cell
130 °C (266 °F)
Maximum pressure
6 bar (90 psi) @ 25°C (77°F)

Process connections

Union nut
G1¼ in. (BSP)
Flow-cell inlet and outlet
Rp1 in. (BSP female) or 1 in. NPT

Specification – AP203 immersion (dip) system

Materials

Guard, shaft and cap
Polypropylene

Maximum temperature

90 °C (194 °F)

Maximum pressure

Not applicable

Process connections

Sliding flange
- Composite DIN & ANSI
- DN50 / ANSI 2 in.

Immersion lengths
- 1 m (3.3 ft.)
- 2 m (6.6 ft.)
- 3 m (10 ft.)

Specification – AP120 combination sensor

Measuring ranges

AP121/0 general process
0 to 14 pH, 0 to 100 °C (32 to 212 °F)
AP121/1 high temperature / alkali
0 to 14 pH, 10 to 130 °C (50 to 266 °F)
AP121/2 low resistance
0 to 10 pH, –5 to 50 °C (23 to 122 °F)
AP121/6 Pt Redox (ORP)
± 2000 mV, 0 to 130 °C (32 to 266 °F)

Reference electrode system

Primary electrolyte
Solid, Ag-free gel with KCl charge
Inner reference system
Ag/AgCl
Junction annular
PTFE, sterilizable
Nominal zero point, E0
7 pH
Minimum conductivity
> 50 µS/cm

General data

Temperature sensor (pH only)
Integral Pt100
Temperature response
T90 <70 seconds
Electrode shaft length
120 mm (4.72 in.)
Max. pressure
6 bar (90 psi)
Ingress protection
IP67/NEMA 6P (exceeds NEMA4X)
Connection head
Sterilizable VP (VarioPin) connector with PG13.5 thread

Overall dimensions

Dimensions in mm (in.)

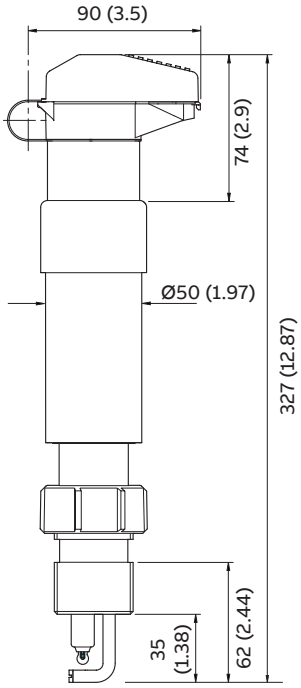

Model AP201 insertion system

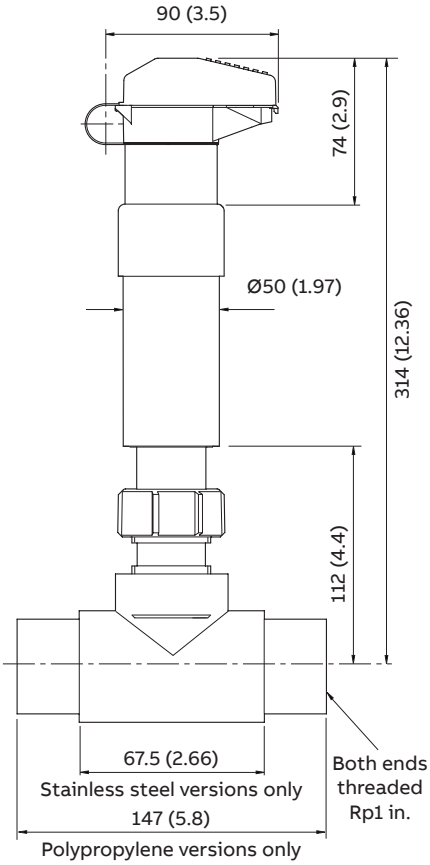

Model AP202 flow-through system

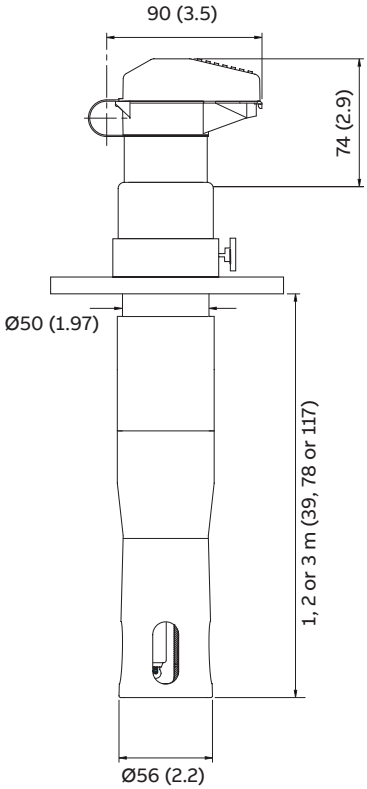

Model AP203 immersion (dip) system

Sensor cable terminations

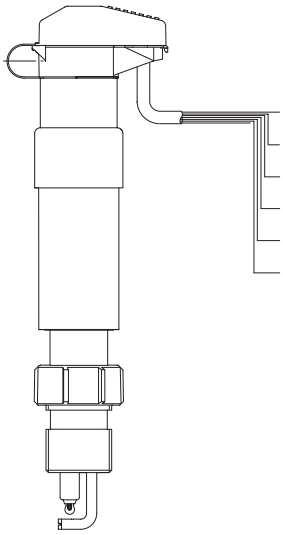

Cable identity	Electrode Pin No.	Function
Transparent	1	pH glass or redox (ORP) sensing electrode
Copper	2	Reference / coaxial shield
Grey	3	Temperature compensator
White	5	Temperature compensator
Green	6	Temperature compensator
Green / yellow	External	Solution ground

Ordering information – sensor system

pH/Redox (ORP) combination sensor				**AP20**	**X/**	**XX**	**X**	**0**	**X**	**XX**	**X**
Process connection type											
Insertion systems					1						
PPS Ryton™: R1¼ in. BSPT male adapter (7690 130)						05					
Polypropylene: 1¼ in. NPT male adapter (7690 134)						06					
Polypropylene: R1¼ in. BSPT male adapter (7690 129)						12					
316SS: DN25, angled socket (7690 133)						07					
316SS: DN25, straight socket (7690 132)						08					
316SS: R1 in. (BSP taper) male adapter (7690 128)						09					
316SS: 1 in. NPT male adapter (7690 131)						10					
Flow-through systems					2						
Polypropylene system Rp1 in. (BSP Female) inlet & outlet						11					
Stainless steel Rp1 in.						14					
Stainless steel 1 in. NPT						18					
Immersion (dip) systems					3						
Length 1 m (3.3 ft)						01					
Length 2 m (6.6 ft)						02					
Length 3 m (10 ft)						03					
Earth rod / spray jet											
316SS earth rod only							0				
316SS earth rod/spray jet							1				
316SS earth rod/spray jet + cleaning tube							2				
Reserved								0			
Electrode type											
None									0		
pH general process	0 to 14 pH, 0 to 100 °C	Gel-filled combination electrode and Pt100	No. AP121/11000						1		
pH high temperature	0 to 14 pH, 10 to 130 °C	Gel-filled combination electrode and Pt100	No. AP121/21000						2		
pH low temperature	0 to 10 pH, –5 to 50 °C	Gel-filled combination electrode and Pt100	No. AP121/31000						3		
Redox (ORP)	Platinum 10 to 130 °C	Gel-filled combination electrode,	No. AP121/60000						6		
Length of cable (and cleaning tube if fitted)											
None supplied										00	
5 m (16 ft.)										05	
10 m (33 ft.)										10	
15 m (49 ft.)										15	
20 m (66 ft.)										20	
Other length										99	
Manual											
None											0
English											1
German											2
French											3
Spanish											4

Ordering information – spare electrode and cable

pH electrodes with integral Pt100*

Electrode type	Part number
Yellow glass (A12) – general process	AP121/11000
White glass (GHS) – high temperature / alkali	AP121/21000
Blue glass (C1B) – low resistance	AP121/31000

*** Note.** AP121 electrodes also available with integral Pt1000 – consult factory.

Platinum redox (ORP) electrodes

Electrode type	Part number
Platinum pin Redox (ORP)	AP121/60000

Detachable cables

Cable length	Part number
5 m (16 ft)	7690050
10 m (33 ft)	7690051
15 m (49 ft)	7690052
20 m (60 ft)	7690053

Sales

Service

Castel Maggiore (BO) 40013
Via Lirone 60/i

e-mail: info@eurotecsrl.com
Tel: +39 051/6321595
Website: www.eurotecsrl.com

C.F.: 04103780377
P.I.: 01596581205

—

ABB Limited
Measurement & Analytics
Oldends Lane, Stonehouse
Gloucestershire, GL10 3TA
UK
Tel: +44 (0)1453 826 661
Fax: +44 (0)1453 829 671

ABB Inc.
Measurement & Analytics
125 E. County Line Road
Warminster, PA 18974
USA
Tel: +1 215 674 6000
Fax: +1 215 674 7183

abb.com/measurement

—

We reserve the right to make technical changes or modify the contents of this document without prior notice. With regard to purchase orders, the agreed particulars shall prevail. ABB does not accept any responsibility whatsoever for potential errors or possible lack of information in this document.

We reserve all rights in this document and in the subject matter and illustrations contained therein. Any reproduction, disclosure to third parties or utilization of its contents – in whole or in parts – is forbidden without prior written consent of ABB.

© Copyright 2018 ABB.
All rights reserved.

3KXA163201R1001

DS/AP200-EN Rev. K 01.2018