ABB MEASUREMENT & ANALYTICS | DATA SHEET

AP100

pH/Redox (ORP) cartridge sensors with water-wash option

Measurement made easy

Tough and durable sensors for on-line pH measurement

Compact 'all-in-one' cartridge design
- simplifies sensor replacement, minimizing downtime

Detachable cable option
- ensures rapid and easy installation and commissioning

'Wetted' sensor
- ready-to-go straight from the box

Low resistance 'blue-glass' version
- unique solution for cold water applications

Flow, dip, insertion and submersible systems
- satisfies a wide range of applications

Small-bore flow system
- for use on applications where only small volumes of sample are available

Stainless steel flow system option
- for use on low conductivity samples

Water-wash option
- minimizes maintenance where coating of the glass electrode is a problem

Replaceable liquid junction
- maximizes sensor life and enables replacement of the electrolyte

The cartridge

The cartridge sensing system has a proven track record in a wide range of applications. New features such as the low resistance 'blue-glass' and the small-bore flow version for low volume samples reinforces the performance and extends the applications that can be fulfilled using this versatile and well-tested system.

Manufactured in glass-coupled polypropylene, the all-in-one sensor can be supplied for flow-through, dip and submersible applications.

Flow systems – can be supplied with a choice of process connections and materials to meet the demands of the sample to be measured. The bayonet snap-fit enables rapid and convenient access for calibration – just twist and turn and the sensor is released for easy and quick calibration.

Pipeline adaptor (7670/063) – is available to enable the sensor to be inserted directly into a pipe.

Dip systems – available in 1, 2 and 3 m (39, 78 and 117 in) lengths for use in open channels and tanks.

Submersible systems – available with an integral sealed connection cable enabling the sensor to be completely submerged – ideal for boreholes or where there is a large rise and fall in the sample to be measured. Provision is made for a support chain to be attached to the system. A wide range of standard cable lengths is available.

Water-wash options – available for flow and dip systems where coating of the pH glass causes maintenance issues. Water-wash has proven very successful in many applications.

Detachable cables – an option that makes replacing the sensor a simple, easy-to-do operation. The use of IP67 plug and socket connectors ensures that problems caused by moisture ingress do not occur and enables reliable operation in the most demanding applications.

Bayonet snap-fit flow system

Quick-release water-wash connection

...The cartridge

Double-junction PTFE reference – a key feature to minimize the risk of blocking of the junction and protect against poisoning of the electrolyte.

Supplied ready-to-go – fitted with a wetted teat to ensure the sensor is in optimum condition and requires no preconditioning prior to installing and commissioning.

Small-bore flow systems – ideal for applications where only small sample volumes are available (between 100 and 500 ml/minute [0.176 and 0.88 pints/minute]) for continuous analysis. These flow systems are offered in a choice of two materials, stainless steel and Delrin, both widely used on low conductivity water. Being small and compact they help to keep the panel size to a minimum when used on multi-parameter packages and are a very cost effective solution.

Low resistance glass – a unique glass designed particularly for cold water samples where conventional sensors perform sluggishly due to low sample temperatures (below 10 °C down to 0 °C [below 50 °F down to 32 °F]). This sensor is used extensively on potable water treatment works where the sample temperature is commonly below 10 °C (50 °F). A further benefit of the low resistance glass is improved speed of response where the sample has a low conductivity (less than 100 µS/cm and down to 20 µS/cm).

Water-wash systems – have proven extremely successful on potable water treatment plants where iron or manganese coat the glass electrode, increasing maintenance levels. The frequency and duration of the clean is controlled via the AX400 Analyzer and during the clean cycle the current output and alarms are frozen to prevent spurious alarms.

Redox (ORP) sensors – supplied in flow, dip and submersible systems, with water-wash options available for flow and dip systems. They are used widely in the treatment of waste water and, in particular, for electro-plating for the treatment of cyanide and chromate waste liquor.

Water-wash connection

Water-wash

Reference electrode refurbishment kit

To allow the maximum working life of the sensor to be achieved, a refurbishment kit is available (Part No. 7670/088). The kit contains a replacement PTFE liquid junction, a bottle of 3.5M KCl reference electrolyte solution and pipette, a liquid junction removal/refitting tool and all necessary O-rings.

Many sensors are replaced because the liquid junction becomes blocked due to the nature of the sample or because the electrolyte solution is exhausted. Replacing the junction and electrolyte extends sensor life and reduces the cost of ownership.

Refurbishment kit

Systems

Flow systems

Offset ported flow system – Delrin

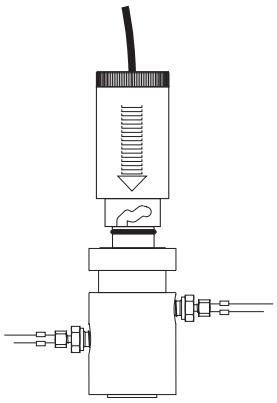

Offset ported flow system – stainless steel

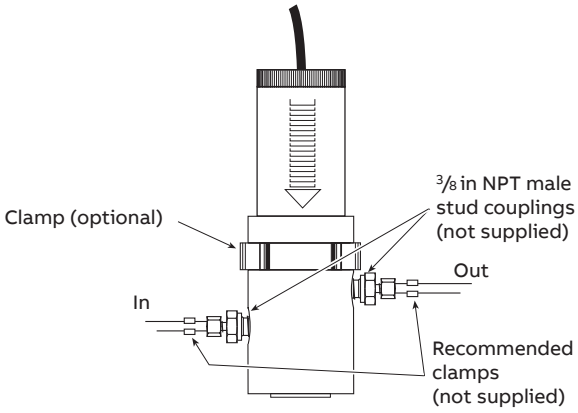

...Systems

Dip systems

Submersible systems

Cartridge with 7670-063 pipeline adaptor

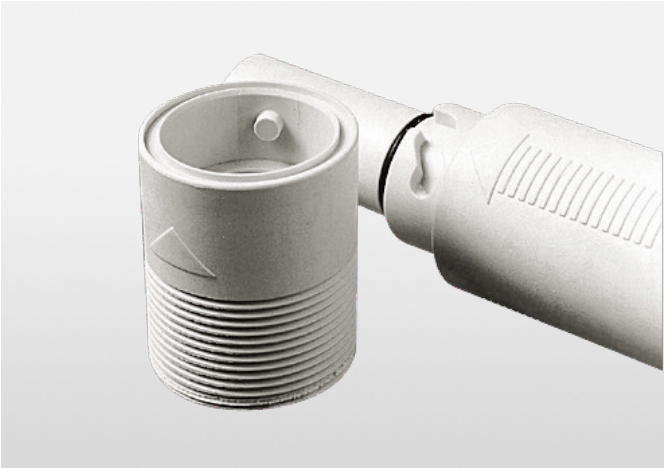

Overall dimensions

Dimensions in mm (in).

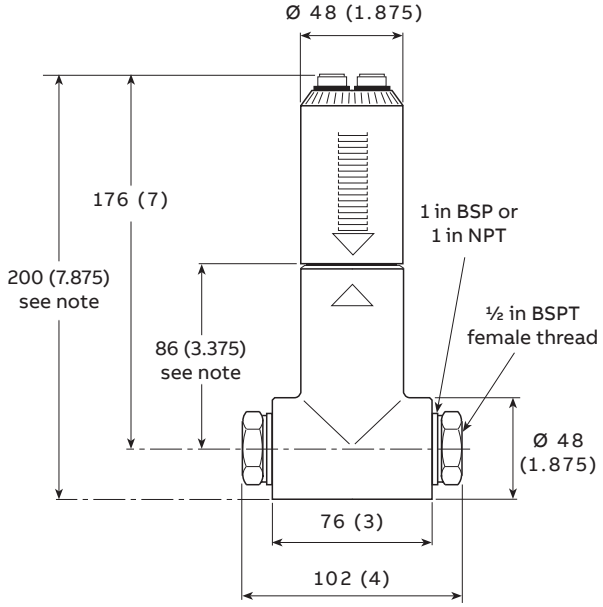

Note. Allow an additional 130 mm (5.125 in) for connectors and cartridge removal.

Flow systems (including water-wash versions)

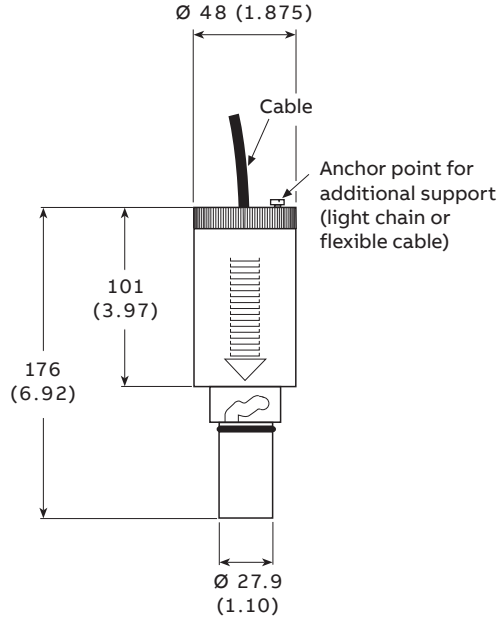

Submersible system

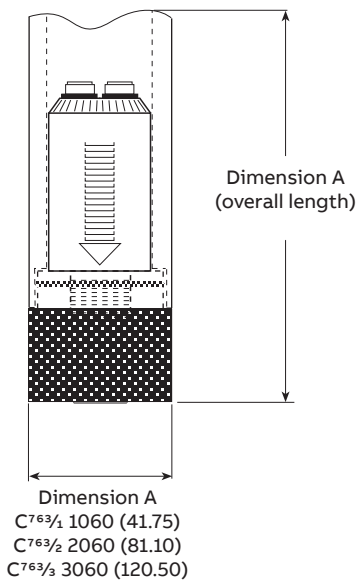

Dip systems

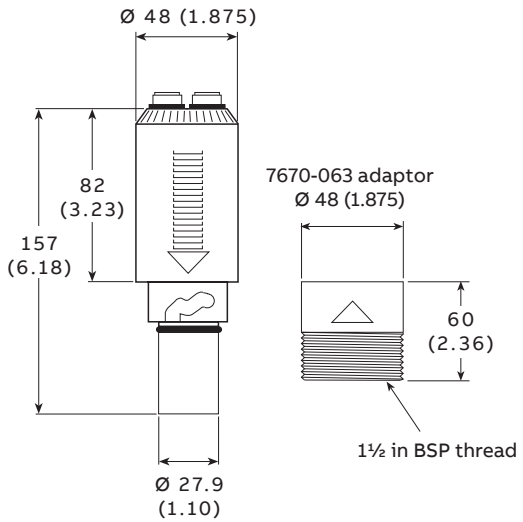

Bayonet cartridge with 7670-063 pipeline adapter

Specification – non water-wash version

Flow systems

pH range
- 0 to 14 pH – standard glass
- 0 to 10 pH – low resistance glass

Temperature range
- 0 to 100 °C (32 to 212 °F) – standard glass
- 0 to 70 °C (32 to 158 °F) – low resistance glass

Pressure
0 to 100 psi at 25 °C (77 °F)

Process connections
- ½ in or 1 in BSP
- ½ in or 1 in NPT
- 3/8 in NPT (low volume version)

O-ring material
Viton

Temperature compensation
3-wire Pt100

Material of construction
- Glass-coupled polypropylene
- Stainless steel or Delrin (low volume version)

7670-063 pipeline adaptor

Material of construction
Glass-coupled polypropylene

Temperature range
0 to 100 °C (32 to 212 °F)

Pressure
0 to 80 psi at 25 °C (77 °F)

Process connection
1½ in BSP

Dip systems

pH range
- 0 to 14 pH – standard glass
- 0 to 10 pH – low resistance glass

Temperature range
- 0 to 100 °C (32 to 212 °F) – standard glass
- 0 to 70 °C (32 to 158 °F) – low resistance glass

Fixing bracket
Not supplied

Immersion length
1 m (39 in), 2 m (78 in) or 3 m (118 in)

O-ring material
Viton

Material of construction
Glass-coupled polypropylene and polypropylene (dip tube)

Temperature compensation
3-wire Pt100

Submersible systems

pH range
2 to 12 pH

Temperature range
0 to 50 °C (32 to 122 °F)

Immersion length
Dependent on cable length:
- Minimum cable length supplied 10 m (32.5 ft)
- Maximum cable length supplied 30 m (98 ft)

Temperature compensation
3-wire Pt100

Material of construction
Glass-coupled polypropylene

Support chain
Not supplied

Specification – water-wash version

Flow systems

pH range

- 0 to 14 pH – standard glass
- 0 to 10 pH – low resistance glass

Temperature range

- 0 to 100 °C (32 to 212 °F) – standard glass
- 0 to 70 °C (32 to 158 °F) – low resistance glass

Pressure (flow)

0 to 60 psi at 25 °C (77 °F)

Process connections

- ½ in or 1 in BSP
- ½ in or 1 in NPT

Dip systems

Immersion length

1 m (39 in), 2 m (78 in) or 3 m (118 in)

Material of construction

Glass-coupled polypropylene and polypropylene

pH range

- 0 to 14 pH – standard glass
- 0 to 10 pH – low resistance glass

Temperature range

- 0 to 80 °C (32 to 176 °F) – standard glass
- 0 to 70 °C (32 to 158 °F) – low resistance glass

O-ring material

Viton

Water supply

Mains water

Line pressure

1 to 4 bar

Note. ABB does not supply the solenoid valve and recommends that the tubing between the valve and the sensor is ¼ in ID PVC for both dip and flow systems. The solenoid valve must be mounted as close as possible to the pH system in order to reduce pressure loss in the supply line.

Ordering information

AP100 pH/Redox (ORP) cartridge sensor	**AP10**	**X/**	**X**	**XX**	**X**	**XX**	**X**	**X**
Cartridge type								
Bayonet, cable detached (**not** dip type)		1						
Bayonet, cable attached (**not** dip type)		2						
Screw-in, cable detached		3						
Submersible *		4						
Sensor type								
Standard glass (0 to 100 °C [32 to 212 °F], 0 to 14 pH)			1					
Standard glass + water-wash (0 to 100 °C [32 to 212 °F], 0 to 14 pH)			2					
Low resistance glass (0 to 70 °C [32 to 158 °F], 0 to 11 pH)			3					
Low resistance glass + water-wash (0 to 70 °C [32 to 158 °F], 0 to 11 pH)			4					
Redox (ORP)			5					
Redox (ORP) + water-wash			6					
Cable length								
No cable				00				
1 m (39 in) cable				01				
2 m (78 in) cable				02				
3 m (117 in) cable				03				
5 m (16.25 ft) cable				05				
10 m (32.5 ft) cable (minimum length for submersible cartridge type)				10				
15 m (48.75 ft) cable				15				
20 m (65 ft) cable				20				
25 m (81.25 ft) cable				25				
30 m (97.5 ft) cable (available only for use with submersible cartridge type)				30				
For cartridge sensor only no further coding options are required. **For full system continue selecting options**								
Dip type (operating temperature 0 to 80 °C [32 to 176 °F])								
No dip tube					0			
1 m (39 in) dip					1			
2 m (78 in) dip					2			
3 m (117 in) dip					3			
1 m (39 in) dip + water-wash					4			
2 m (78 in) dip + water-wash					5			
3 m (117 in) dip + water-wash					6			
Flow sensor type (operating temperature 0 to 100 °C [32 to 212 °F])								
No flow cell						00		
Bayonet ½ in BSP process connection glass-coupled polypropylene						01		
Bayonet 1 in BSP process connection glass-coupled polypropylene						02		
Bayonet ½ in NPT process connection glass-coupled polypropylene						03		
Bayonet 1 in NPT process connection glass-coupled polypropylene						04		
Screw-in ½ in BSP process connection glass-coupled polypropylene						05		
Screw-in 1 in BSP process connection glass-coupled polypropylene						06		
Screw-in ½ in NPT process connection glass-coupled polypropylene						07		
Screw-in 1 in NPT process connection glass-coupled polypropylene						08		
Bayonet 3/8 in NPT process connection stainless steel low volume						11		
Bayonet 3/8 in NPT process connection Delrin low volume						12		
Pipe-line adapter process connection 1½ in BSP (bayonet fitting)						13		
Reserved							0	
Manual								
English								1
German								2
French								3
Spanish								4
Other								9

* Submersible cartridge type available only with either sensor type option 1 (standard glass), 3 (low resistance glass) or 5 (redox [ORP]).
Submersible cartridge type available only with cable length of 10 m (32.5 ft) or over.

Cartridge part number changes

The number of options available in the cartridge series has been increased significantly. To accommodate the new models it has been necessary to restructure the part numbers as shown in the table below. The new part numbers must be used when ordering replacements.

Old Part Number	Cartridge description	New part number
7670/101	Bayonet cartridge	AP101/100
7670/102	Screw-in cartridge	AP103/100
7670/301	Bayonet with water wash	AP101/200
7670/302	Screw-in with water wash	AP103/200
7670/211	Bayonet cartridge redox (ORP)	AP101/500
7670/311	Bayonet cartridge redox (ORP) with water wash	AP101/600
7670/212	Screw-in cartridge redox (ORP)	AP103/500
7670/312	Screw-in cartridge redox with water wash	AP103/600
7670/600	Submersible system with 10 m (32.5 ft) cable	AP104/110
7670/601	Submersible system with 15 m (48.75 ft) cable	AP104/115
7670/602	Submersible system with 20 m (65 ft) cable	AP104/120
7670/603	Submersible system with 25 m (81.25 ft) cable	AP104/125
7670/604	Submersible system with 30 m (97.5 ft) cable	AP104/130

Sales

Service

Castel Maggiore (BO) 40013
Via Lirone 60/i

e-mail: info@eurotecsrl.com
Tel: +39 051/6321595
Website: www.eurotecsrl.com

C.F.: 04103780377
P.I.: 01596581205

—

ABB Limited
Measurement & Analytics
Oldends Lane, Stonehouse
Gloucestershire, GL10 3TA
UK
Tel: +44 (0)1453 826 661
Fax: +44 (0)1453 829 671

ABB Inc.
Measurement & Analytics
125 E. County Line Road
Warminster, PA 18974
USA
Tel: +1 215 674 6000
Fax: +1 215 674 7183

abb.com/measurement

—

We reserve the right to make technical changes or modify the contents of this document without prior notice. With regard to purchase orders, the agreed particulars shall prevail. ABB does not accept any responsibility whatsoever for potential errors or possible lack of information in this document.

We reserve all rights in this document and in the subject matter and illustrations contained therein. Any reproduction, disclosure to third parties or utilization of its contents – in whole or in parts – is forbidden without prior written consent of ABB.

© Copyright 2018 ABB.
All rights reserved.

3KXA163101R1001

DS/AP100-EN Rev. K 01.2018