ABB MEASUREMENT & ANALYTICS | DATA SHEET

Navigator 500

Dissolved oxygen analyzer

Measurement made easy

Accurate and reliable measurement of dissolved oxygen in high purity water

Monitors both low and high dissolved oxygen concentrations
- suitable for measurement during two-shifting and
- baseload operations on power stations

Automatic calibration
- minimizes manual intervention and protects
- sensor during calibration

Fast response
- reacts quickly to rapid changes in plant conditions

Thermal protection
- protects sensor in the event of cooling water failure

Disposable sensor
- minimizes down time and avoids the need for skilled personnel to carry out sensor refurbishment

Comprehensive diagnostics
- provides sensor condition and analyzer status data

Connect multiple wet-sections to a single transmitter
- reduces footprint and installation costs

The Navigator 500 range

The Navigator 500 range of analyzers from ABB are designed for high purity water treatment applications and power cycle chemistry monitoring.

The analysis and signal conditioning is conducted within the Navigator 550's advanced wet-section that houses the sensing technology. The accurate measurement result is transmitted digitally to the Navigator 540 transmitter.

The Navigator 540 universal transmitter enables connection of up to 4 different Navigator 550 wet-sections and is available with optional features such as SD card data retrieval and graphical trending, as well as additional outputs and communication options.

The following parameters are available in the Navigator 500 range:

Navigator 500
- Dissolved Oxygen
- Sodium
- Hydrazine

Navigator 500 dissolved oxygen analyzer
The Navigator 500 dissolved oxygen analyzer provides continuous monitoring and control of power station boiler feed water / steam condensate.

The wet-section houses ABB's maintenance-free electrochemical cell that accurately measures the amount of dissolved oxygen in the water.

Measurement results are updated digitally to the Navigator 540 transmitter where process trends of up to 4 separate wet-sections can be viewed locally on the color display. Users of this system also benefit from the analyzer's low maintenance requirements, ease-of-use, auto-calibration and proven sensing performance.

Process data, together with the content of alarm and audit logs within the transmitter, can be saved to a removable media for record keeping and analysis using ABB's DataManager Pro data analysis software.

Navigator 500 transmitter

Sodium
Hydrazine
Dissolved Oxygen

Navigator wet-sections

Sodium

Hydrazine

Dissolved Oxygen
(ADS550

Dissolved Oxygen
(ADS551)

Figure 1 Navigator 500 family

Applications

Typical applications for the Navigator 500 dissolved oxygen analyzer include:

- Protection against corrosion caused by excessive dissolved oxygen concentrations
- Deaerator efficiency indication
- Hydrazine dosing efficiency indication

Low level dissolved oxygen on boiler plant

The need for accurate monitoring

Accurate measurement of dissolved oxygen is essential for efficient, cost-effective operation of boiler plant. In its dissolved form, oxygen is highly corrosive to most metals, especially the mild steel used for boiler tubes. The presence of even small quantities of dissolved oxygen in boiler water can severely impair a boiler's operation, causing corrosion of its vital components and significantly reducing its working life.

To minimize damage caused by corrosion, it is therefore necessary to reduce dissolved oxygen to the lowest possible level, typically in the order of seven parts per billion or less. In some applications, particularly those operating once-through boilers, it is preferable to add oxygen to the boiler feedwater, causing a layer of soft haematite to form on the boiler tubes. Hydrazine is then added that reacts with the haematite, converting it to a hard layer of magnetite that protects the tubes from further corrosion.

Monitoring should be carried out wherever there is a risk of oxygen ingress into the boiler feedwater. An effective system monitors dissolved oxygen at key points including the extraction pump discharge, the deaerator inlet and outlet and the economizer or boiler inlet.

The Navigator 500 solution

The significant variations in oxygen levels during the load cycle of a plant, combined with the different levels required for different boiler chemistry regimes, require an analyzer that offers a fast response across both high- and low-level dissolved oxygen concentrations.

The Navigator 500 dissolved oxygen analyzer uses a galvanic-type sensor to accurately measure dissolved oxygen levels in process feed water. Accurate and reliable, it requires no maintenance and can measure dissolved oxygen concentrations up to 20 ppm.

Featuring a separate wet-section and transmitter, the Navigator 500 dissolved oxygen analyzer gives users the option of adding up to 4 wet-sections to one transmitter, enabling measurement of samples from different points in the boiler feedwater line. This feature also allows users to mix-and-match different sensor types from the Navigator 550 range of hydrazine and sodium wet-sections.

Overview of Navigator 500 dissolved oxygen analyzer

Transmitter

- Simple navigation and easy-to-use menu system
- Full audit trail logs
- SD card or USB archiving
- Graphical trending
- Password protected security
- Connect up to 4 wet-sections in the Navigator 500 range

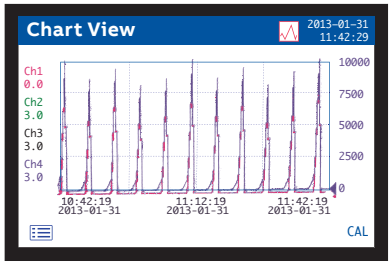

Graphical trending

- Measurement trends of each connected wet-section can be easily and clearly viewed locally on the graphical color display

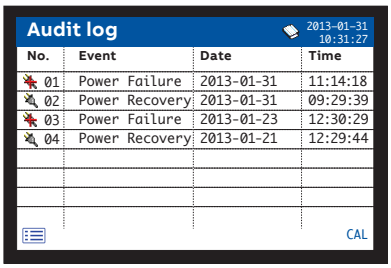

Full audit trail logs

- Diagnostic messages, alarm events, calibration details and system activity are stored in the transmitter audit logs for review

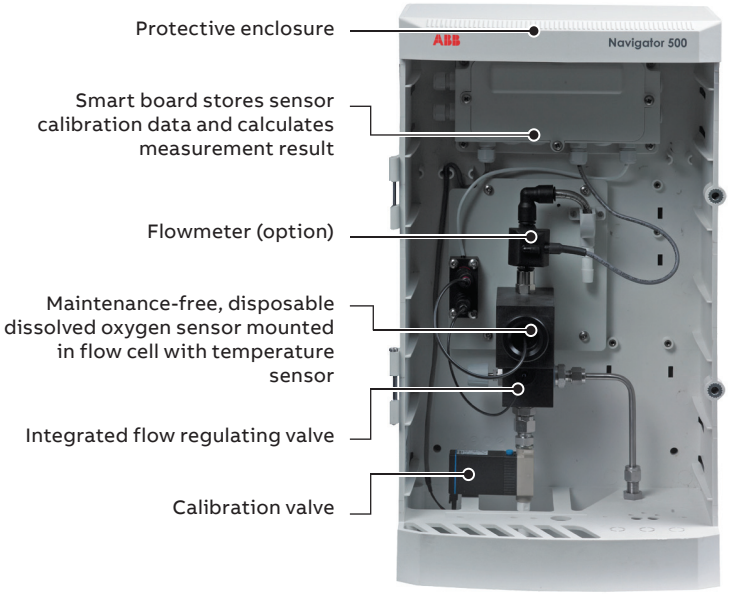

ADS550 Wet section

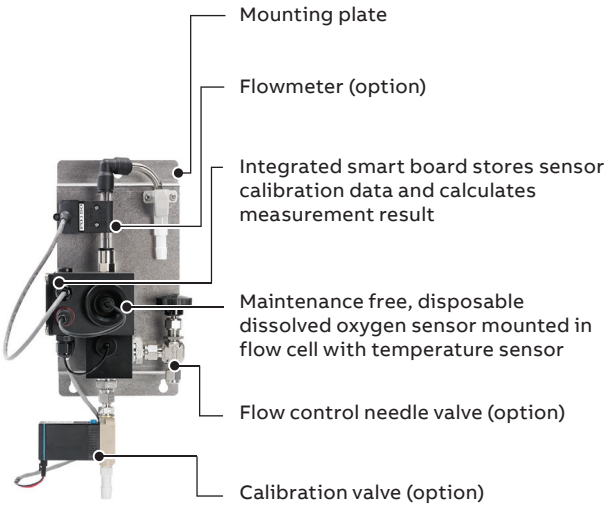

ADS551 Wet section

Accurate and reliable measurement

The Navigator 500 dissolved oxygen analyzer has been designed for ease-of-use and maintenance simplicity, while offering the benefits of flexible communication and advanced data acquisition.

Measuring principle

The Navigator 500 dissolved oxygen analyzer uses a disposable galvanic cell in a custom-designed flow cell. Sample flow is adjusted easily by a flow regulating needle valve and monitored by an optional flowmeter.
A temperature sensor, fitted in the flowcell, measures the temperature of the sample.

The signal from the dissolved oxygen sensor and the temperature sensor is passed to the smart board located within the Navigator 550 wet-section. The smart board accurately calculates the dissolved oxygen measurement result and transfers it digitally to the Navigator 540 transmitter.

Maintenance-free disposable sensor

ABB dissolved oxygen sensors are maintenance-free and long lasting. Their encapsulated design removes the requirement for time-consuming maintenance such as membrane changes or electrolyte replenishment.
The easy replacement procedure for the maintenance-free DO sensor just takes seconds, saving further valuable time and cost.

Figure 2 Easy sensor replacement

Simple automatic calibration

The Navigator 500 dissolved oxygen analyzer features automatic calibration that verifies the analyzer's performance and calculates sensor efficiency. During calibration the sample is diverted, exposing the dissolved oxygen sensor to air.

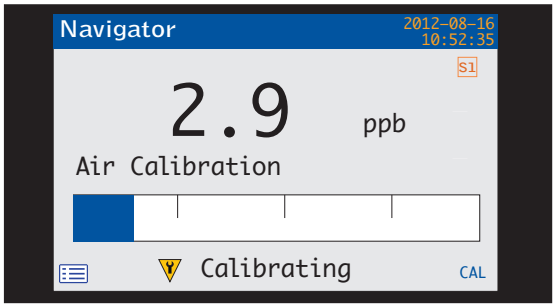

Once the calibration routine is complete, sensor efficiency is calculated and displayed, providing the user with a valuable indication of sensor life.

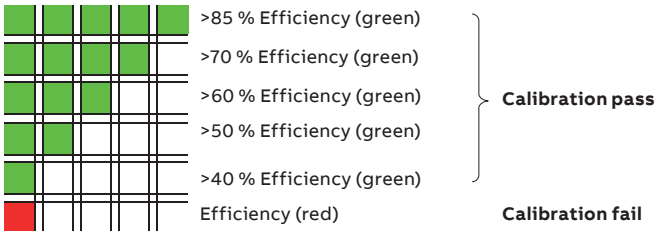

The frequency of automatic calibration can be scheduled by the user to occur from daily to bi-monthly intervals.
Calibration can also be initiated manually by the operator.

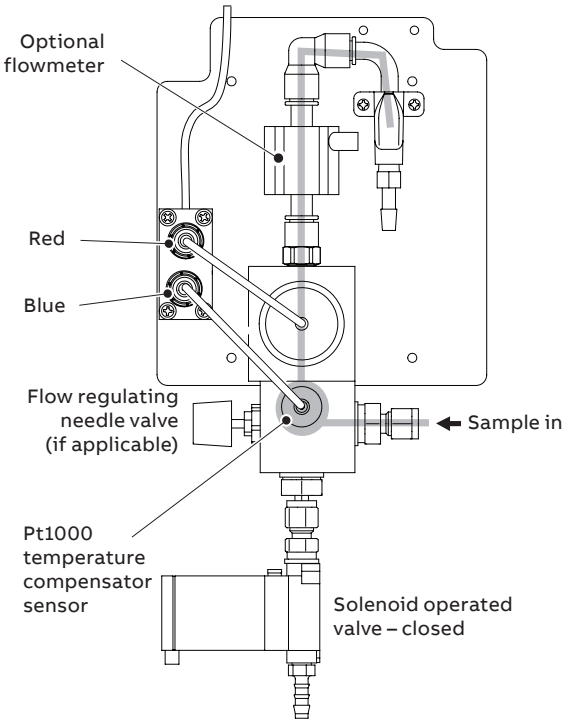

Flow during normal operation

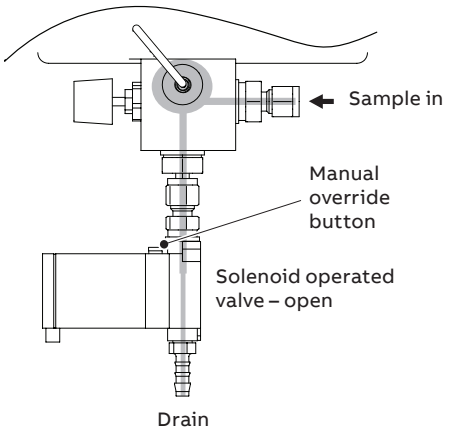

Flow during calibration or thermal overload condition

Figure 3 Flow conditions

Specification – system

Operation

Measuring range
0 to 20,000 ppb
Units of measure
ppb, µg/l, µg/kg
Accuracy
±5 % of reading or ±1 ppb, whichever is the greater
Repeatability
±3 % of reading or ±1 ppb, whichever is the greater
Response time
1 minute for a 90 % step change
Resolution
0.1 ppb
Temperature compensation
5 to 55 °C (41 to 131 °F) automatic using a Pt1000
Salinity correction
Preset within the range 0 to 80 ppt
Barometric pressure correction
Preset within the range 500 to 800 mm Hg
AutoCal frequency
Programmable from 1 to 7 days or 1 to 8 weeks
Sample temperature
5 to 55 °C (41 to 131 °F)
Sample pressure
2 bar gauge (29 psi) maximum
Sample flow rate
100 to 300 ml/min
Sample connections
1/4 in. or 6 mm OD pipe (stainless steel recommended)

Environmental data

Ambient operating temperature:
0 to 55 ºC (32 to 131 ºF)
Ambient operating humidity:
Up to 95 % RH non-condensing
Storage temperature:
–20 to 70 °C (–4 to 158 °F) without sensor
0 to 55 °C (41 to 131 °F) with sensor

Approvals, certification and safety
Safety approval
cULus
CE mark
Covers EMC & LV Directives
(including latest version EN 61010)
General safety
EN61010-1
Pollution category 2
Insulation category 2

EMC

Emissions & immunity
Meets requirements of IEC61326 for an industrial environment and domestic emissions
Maintenance
Periodic calibration:
User-defined

Specification – wet-section

Mechanical data

Protection
IP54
Dimensions – ADS550
Height: 480 mm (18.90 in)
Width: 290 mm (11.41 in) – door shut
Depth: 185 mm (7.28 in) door closed – minimum (excluding fixing brackets)
Weight: 4.5 kg (10 lb)
Dimensions – ADS551
Height: 194 mm (7.64 in.) minimum – excluding glands
Width: 214 mm (8.42 in.) – excluding glands
Depth: 98 mm (3.85 in.) door closed; minimum – excluding fixing brackets
Weight: 1.5 kg (3.3 lb)

Electrical

Power supply ranges (supplied by transmitter)
24 V DC max.
Power consumption
8 W max.

Specification – transmitter

Operation

Display
89 mm (3.5 in) color 1/4 VGA TFT, liquid crystal display (LCD) with built-in backlight and brightness / contrast adjustment
Language
English, German, French, Italian, Spanish
Keypad
6 tactile membrane keys:
Group select / left cursor, view select / right cursor, menu key, up, down, enter key
No of inputs
Up to 4 single-stream or 1 multi-stream wet-section

Mechanical data

Protection
IP66 / NEMA 4X
Dimensions
Height:
194 mm (7.64 in) minimum (excluding glands)
Width:
214 mm (8.42 in) – excluding glands
Depth:
98 mm (3.85 in) door closed – minimum (excluding fixing brackets)
Weight:
1.5 kg (3.3 lb)

Materials of construction
Glass-filled polycarbonate

Security

Password protection
Calibrate and Advanced – user-assigned
Service level access – factory-set

Electrical

Power supply ranges
100 to 240 V AC max., 50 / 60 Hz ±10 %
(90 to 264 V AC, 45/65 Hz)
Power consumption
<30W

Terminal connections rating
AWG 26 to 16 (0.14 to 1.5 mm2)

Analog outputs
2 standard
2 optional
Galvanically isolated from the rest of the circuitry, 500 V for 1 minute. Range-programmable source and range 0 to 22 mA, maximum load 750 W @ 20 mA

Relay outputs
4 standard
2 optional
Fully-programmable. Contacts rated at 2A @ 110 / 240 V. Standard relays are changeover. Optional relays are normally closed (N/C).

Digital inputs / outputs
6 standard, user-programmable as input or output
Minimum input pulse duration: 125 ms
Input:
volt-free or 24 VDC (conforms to IEC 61131-2)
Output:
open-collector, 30 V, 100 mA max.
(conforms to IEC 61131-2)

Connectivity / communications

Ethernet
Profibus DP
DP-V1
Modbus
RTU, RS485, 2-wire/4-wire

Data logging

Storage
Measurement value storage (programmable sample rate)
Audit Log*, Alarms Log*, Calibration log, Diagnostics log, Configuration changes
Chart view
On local display
Historical review
Of data
Data transfer
SD card interface / USB stick – Windows-compatible FAT file system, data and log files in Excel and DataManager Pro compatible formats

*Audit Log and Alarm Log data are stored in the same log file.

Overall dimensions

Transmitter

Dimensions in mm (in.)

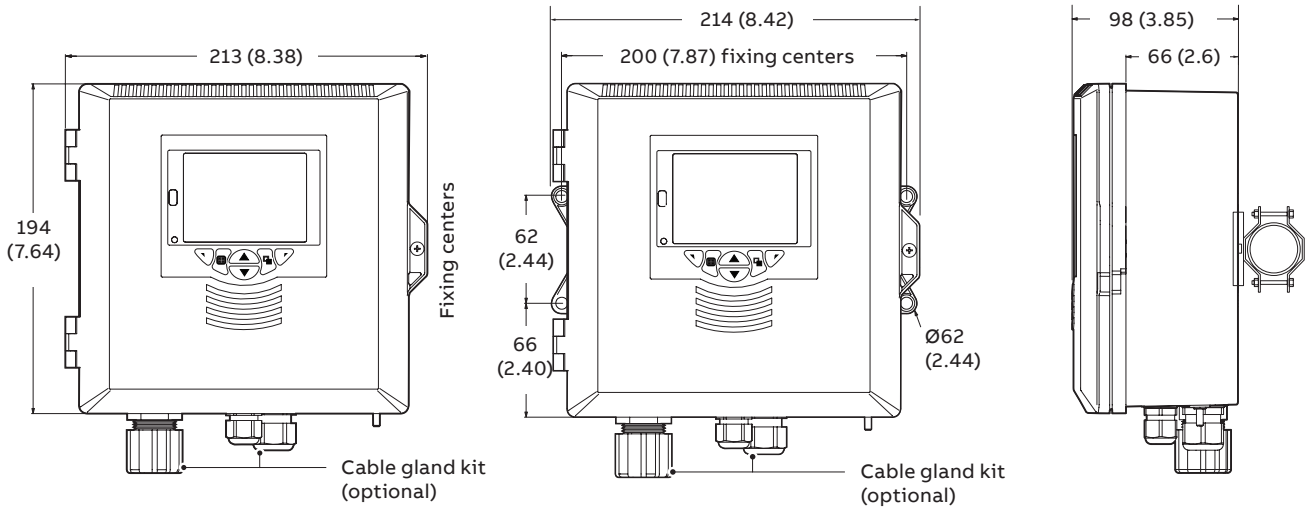

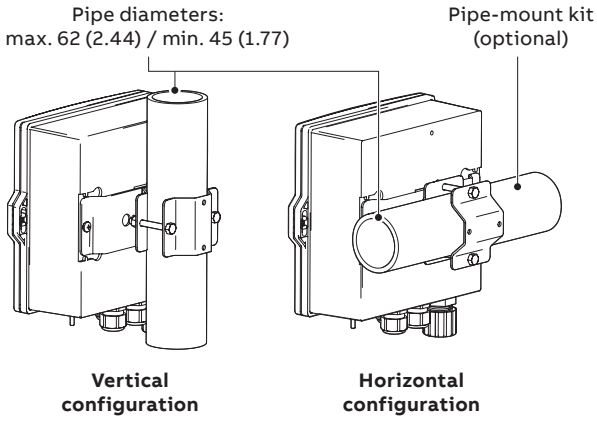

Wet-section – ADS550
Dimensions in mm (in.)

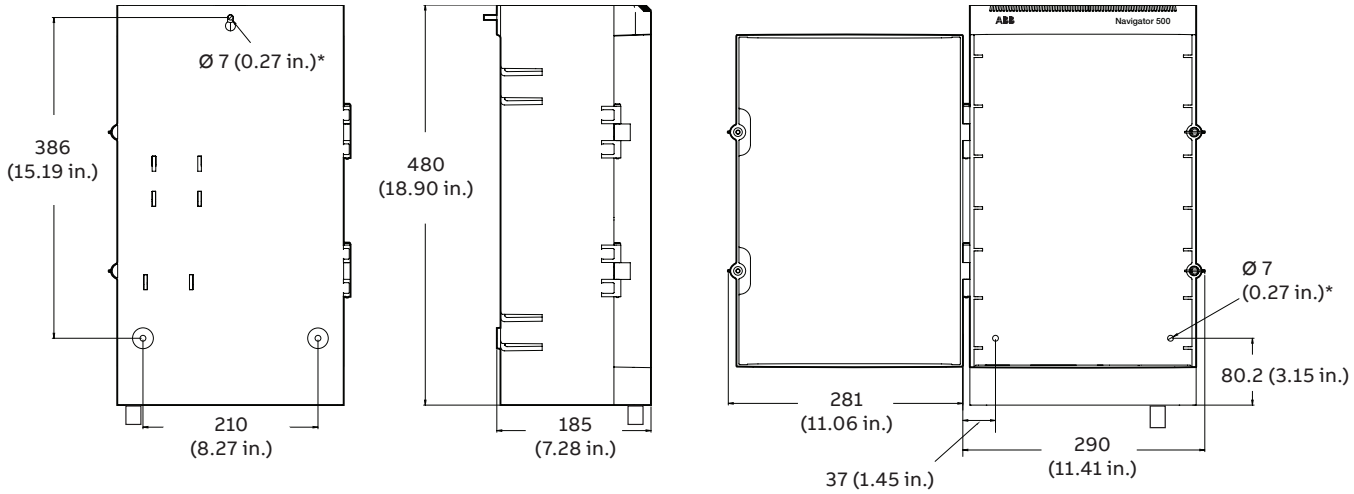

Wet-section – ADS551
Dimensions in mm (in.)

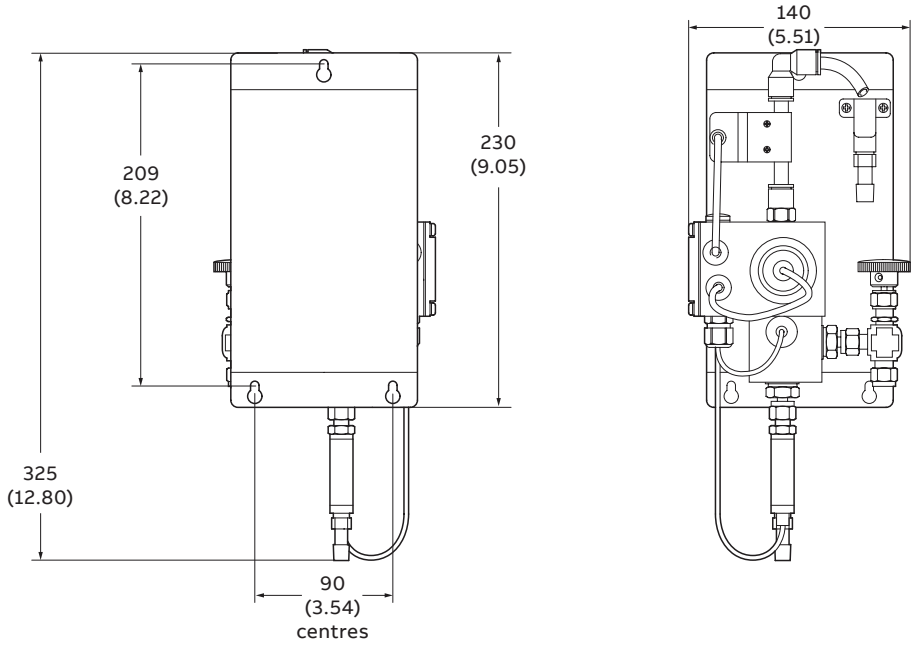

Electrical connections

Transmitter

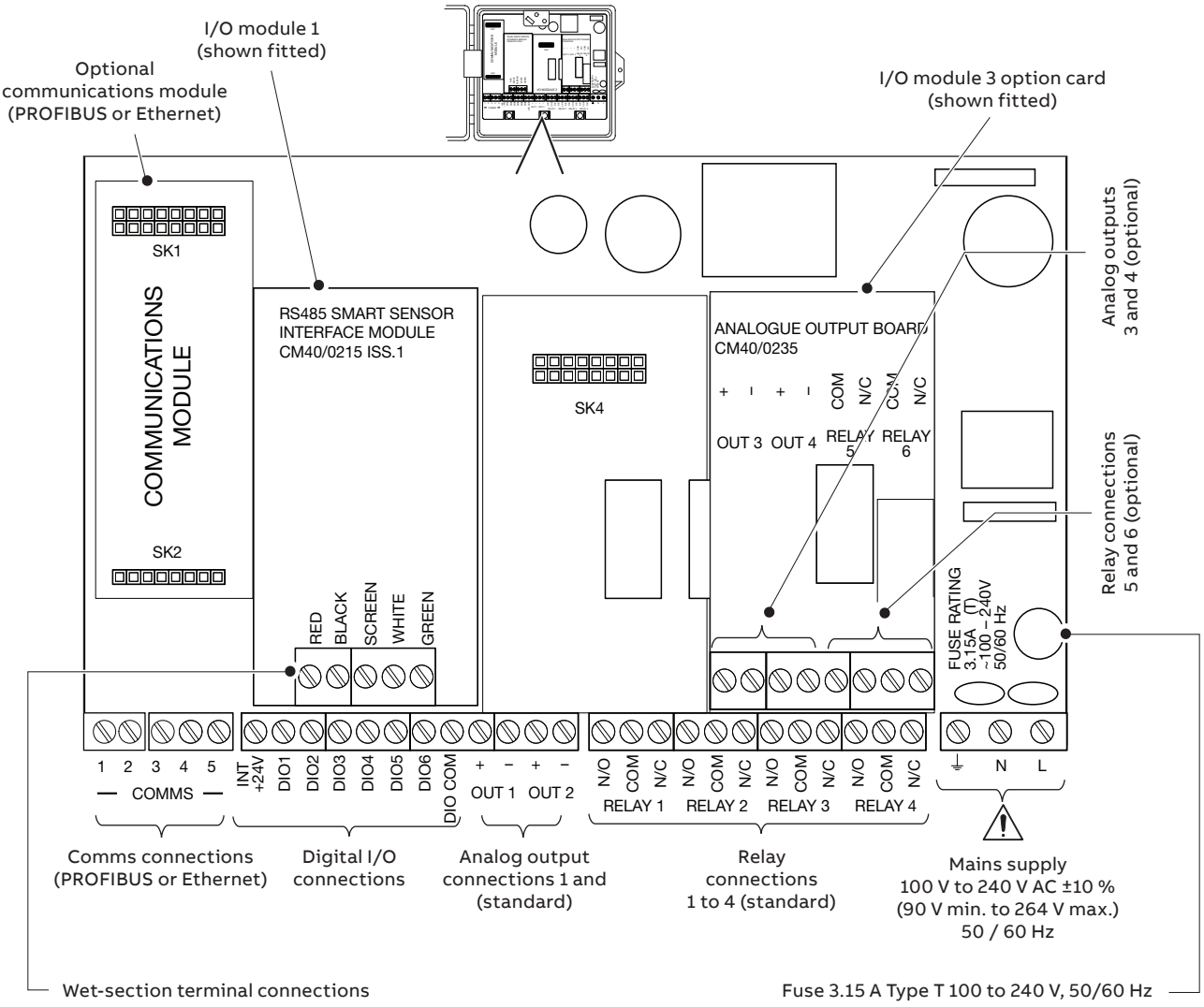

Digital I/O, relays and analog output

Relays (1 to 4)

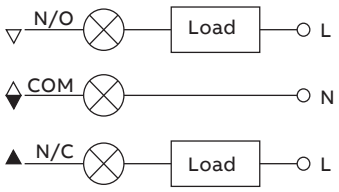

Relays (5 and 6)

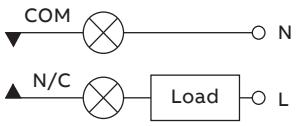

Digital output

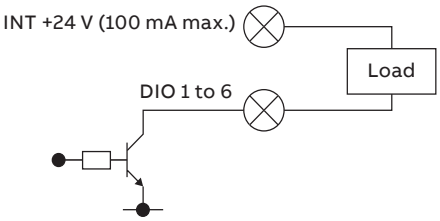

Analog outputs (1 to 4)

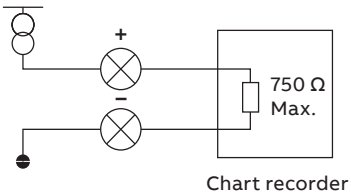

Digital input (24 volt)

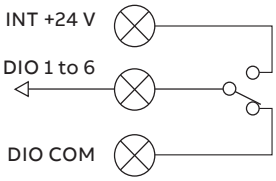

Digital input (voltage-free)

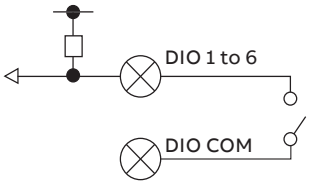

Wet-section – ADS550
(applicable only to multiple wet-section systems)

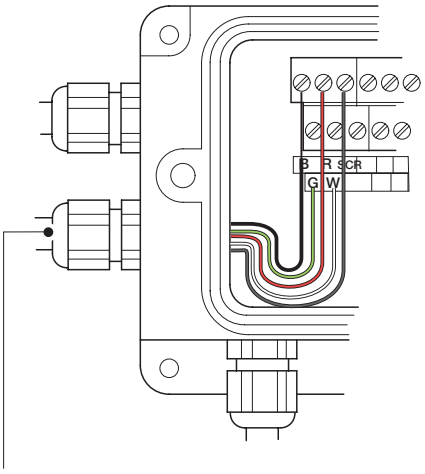

Additional serial cable connections to multiple wet-sections
Red – R (24 V)
Black – B (0 V)
Green – G (Data +ve)
White – W (Data –ve)
Screen – SCR

Wet-section – ADS551

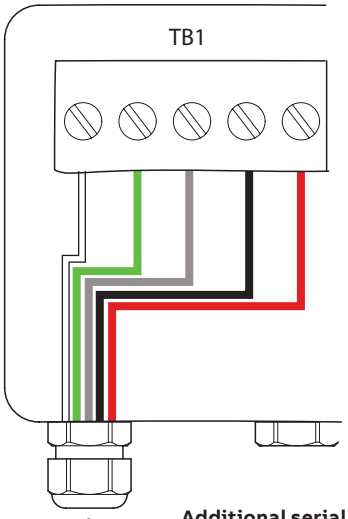

Additional serial cable connections to multiple wet-sections
White – W (Data –ve)
Green – G (Data +ve)
Screen – SCR
Black – B (0 V)
Red – R (24 V)

Ordering Information

Wet-section – ADS550

Navigator 500 dissolved oxygen analyzer	**ADS550/**	**X**	**X**	**X**	**X**	**XX**	**XX**	**XX**	**XXX**	**XX**	**XX**
Build revision											
Reserved		A									
Measurement range											
Standard (0 to 20,000 ppb)			1								
Enclosure type											
Wall				W							
Number of streams											
Single stream					1						
Sensor type											
Standard						S1					
Supplied without sensor						Y0					
Process connection type											
6 mm fitting							A1				
1/4 in. fitting							B1				
Optional ordering codes Add 1 or more of the following codes after the standard ordering information to select any additional options.											
Sample measurement options											
Sample flow measurement								S1			
Signal cable length and type (supplied without signal cable as standard)											
1.5 m (approx. 5 ft) cable, terminal connection									SC1		
5 m (approx. 15 ft) cable, terminal connection									SC2		
10 m (approx. 30 ft) cable, terminal connection									SC3		
20 m (approx. 60 ft) cable, terminal connection									SC4		
Test certificate											
Test certificate										CD	
Documentation language* (supplied in English as standard)											
German											M1
Italian											M2
Spanish											M3
French											M4
English											M5

*Commissioning instructions are supplied with each transmitter.

Comprehensive operating instructions are available as a free download from www.abb.com or printed copies can be ordered as additional items.

Wet-section – ADS551

Navigator 500 dissolved oxygen sensing system	**ADS551/**	**X**	**X**	**X**	**X**	**XX**	**XX**	**XX**	**XXX**	**XX**	**XX**
Build revision											
Reserved		A									
Measurement range											
Standard (0 to 20,000 ppb)			1								
Enclosure type											
Wall				W							
Number of streams											
Single stream					1						
Sensor type											
Standard						S1					
Supplied without sensor						Y0					
Process connection type											
6 mm fitting							A1				
1/4 in. fitting							B1				
Optional ordering codes											
Sample measurement options											
Auto calibration valve								A1			
Sample flow control valve								B1			
Sample flow measurement								S1			
Signal cable length and type (supplied without signal cable as standard)											
1.5 m (approx. 5 ft) cable, terminal connection									SC1		
5 m (approx. 15 ft) cable, terminal connection									SC2		
10 m (approx. 30 ft) cable, terminal connection									SC3		
20 m (approx. 60 ft) cable, terminal connection									SC4		
Test certificate											
Test certificate										CD	
Documentation language (supplied in English as standard)											
German											M1
Italian											M2
Spanish											M3
French											M4
English											M5

*Comprehensive operating instructions are available as a free download from www.abb.com or printed copies can be ordered as additional items.

Ordering information

Transmitter

Navigator 540 transmitter	**AWT540/**	**X**	**X**	**X**	**X**	**XX**	**XX**	**XX**	**XX**	**XX**	**XX**	**XX**	**XX**	**XX**
Build revision														
Reserved		A												
Enclosure type														
Wall mount			1											
Display type														
Color (standard)				A										
Power supply														
90 to 260 V AC, 50 to 60 Hz					1									
Channel 1														
Digital, wired sensor connection						B1								
Without						Y0								
Reserved							Y0							
Reserved								Y0						
Output signal														
Without									Y0					
Additional output card (2 current outputs + 2 relays)									Y2					
Ethernet									E1					
Profibus DPV1									D1					
Data storage														
Without										Y0				
SD card function										D1				
USB function										D8				
Optional ordering codes Add 1 or more of the following codes after the standard ordering information to select any additional options.														
Accessories														
Panel mount kit											A2			
Test certificate														
Test certificate												CD		
Documentation language * (supplied in English as standard)														
German													M1	
Italian													M2	
Spanish													M3	
French													M4	
English													M5	
Cable entry options														
Metric gland pack (9 glands)														U1

* Commissioning instructions are supplied with each transmitter.
Comprehensive operating instructions are available as a free download from www.abb.com or printed copies can be ordered as additional items.

Notes

Notes

Sales

Service

Software

Castel Maggiore (BO) 40013
Via Lirone 60/i

e-mail: info@eurotecsrl.com
Tel: +39 051/6321595
Website: www.eurotecsrl.com

C.F.: 04103780377
P.I.: 01596581205

—

ABB Limited
Measurement & Analytics
Oldends Lane
Stonehouse
Gloucestershire GL10 3TA
UK
Tel: +44 (0)1453 826 661
Fax: +44 (0)1453 829 671
Mail: instrumentation@gb.abb.com

ABB Inc.
Measurement & Analytics
125 E. County Line Road
Warminster, PA 18974
USA
Tel: +1 215 674 6000
Fax: +1 215 674 7183

abb.com/measurement

We reserve the right to make technical changes or modify the contents of this document without prior notice. With regard to purchase orders, the agreed particulars shall prevail. ABB does not accept any responsibility whatsoever for potential errors or possible lack of information in this document.

We reserve all rights in this document and in the subject matter and illustrations contained therein. Any reproduction, disclosure to third parties or utilization of its contents – in whole or in parts – is forbidden without prior written consent of ABB.

© Copyright 2017 ABB.
All rights reserved.

DS/ADS550-EN Rev. H 08.2017