ABB MEASUREMENT & ANALYTICS | DATA SHEET

Aztec ADS430

Optical dissolved oxygen probe

Measurement made easy

EPA-approved optical dissolved oxygen measurement

Easy to use

- plug-and-play digital sensor connection
- automatic sensor recognition and set-up
- advanced predictive maintenance diagnostics
- supplied factory-calibrated ready for use

Accurate and reliable

- dynamic luminescence quenching technology eliminates sensor drift
- fast response time with patented signal processing
- robust construction provides abrasion and UV resistance

US EPA Approved

- US EPA approved technology for use in Clean Water Act programs
- suitable for use by NPDES permit holders for monitoring influent, effluent and treatment processes

Low cost of ownership

- long life sensor cap pre-loaded with factory calibration coefficients
- no need for on-site calibration
- fully automatic air cleaning system available

Flexible installation options

- suitable for tank, open channel or flow-cell installation
- range of handrail, wall or floor mounting kits
- suitable for saline applications

The Aztec 400 range

The Aztec 400 range of advanced digital sensors are designed for monitoring the key parameters in municipal and industrial water / wastewater treatment.

Featuring ABB's EZLink technology, the sensors offer plug-and-play measurement with ABB's latest digital transmitters to create the easiest-to-use and maintain monitoring systems on the market today.

Analysis and signal conditioning is conducted within the robust sensor housing and transmitted digitally to the transmitter.

The Aztec 400 range of digital sensors with EZLink offer:
- Plug-and-play digital sensor connection
- Automatic sensor recognition and set-up
- Advanced predictive maintenance diagnostics
- Enhanced measurement accuracy due to minimal electrical noise interference

ABB's latest range of digital transmitters featuring EZLink offer:
- Multiple sensor connection
- Data logging and graphical process trending
- Full audit trail capability
- SD card / USB stick data download capability
- Flexible communications including Ethernet, Profibus, MODBUS and analog outputs

Fig. 1 AWT440 transmitter

Aztec ADS430 RDO PRO-X optical dissolved oxygen sensor

The Aztec ADS430 optical dissolved oxygen sensor uses Rugged Dissolved Oxygen (RDO®) optical technology for measuring dissolved oxygen in the most demanding process environments including high saline applications. The robust construction resists abrasion and photobleaching effects that limit the lifetime of other optical DO sensors.

The Aztec ADS430 RDO PRO-X patented signal processing ensures the fastest response time to changes in concentration and maintains stability, even in dynamically-changing conditions up to 50 mg/l dissolved oxygen.

To eliminate programming errors, the sensor cap is pre-loaded with factory calibration coefficients, serial number, lifetime indication and manufacture date enabling long term deployment without the need for on-site calibration.

Analysis and signal conditioning is conducted within the robust sensor housing and transmitted digitally to the transmitter.

Featuring ABB's EZLink technology, users of this system benefit from plug-and-play connectivity, automatic sensor recognition / set-up and predictive diagnostics.

Applications

Typical applications for the Aztec ADS430 RDO PRO-X dissolved oxygen sensor include:
- Municipal and industrial water and wastewater treatment
- Food and beverage process control
- Aquaculture control

Accurate and reliable measurement

The Aztec ADS430 RDO PRO-X uses the latest advancements in optical measurement technology to provide an extremely stable and accurate measurement system that maintains calibration and operates without drift. This enables the system to operate continuously for up to 24 months. The advanced diagnostics notifies users of maintenance requirements, resulting in the lowest cost-of-ownership.

Measuring principle

When the Aztec ADS430 RDO PRO-X initiates a reading, an LED emits blue light that excites the lumiphore molecules within the sensor cap. Excited lumiphore molecules emit red light that is detected by a photodiode.

Oxygen molecules quench the excited lumiphore molecules and prevent the emission of red light; this process is called 'dynamic luminescence quenching'.

The Aztec ADS430 RDO PRO-X sensor measures the phase shift between the returned red light from the excited lumiphore molecules and red light from a red reference LED to calculate luminescence lifetime.

As the relationship between the dissolved oxygen concentration and the returned red light is inversely proportional, the sensor is able to calculate the dissolved oxygen concentration accurately.

A titanium temperature sensor is fitted in the body of the probe to compensate for changes in process temperature.

Dissolved oxygen determination by luminescence quenching has a linear response over a broad range of concentrations and offers a high degree of accuracy and stability.

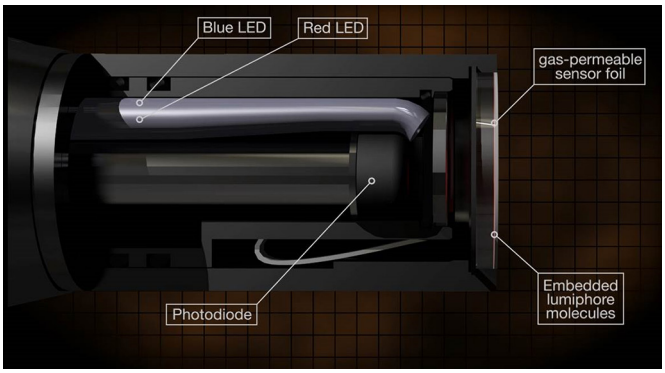

Fig. 2 Overview of ADS430 sensor

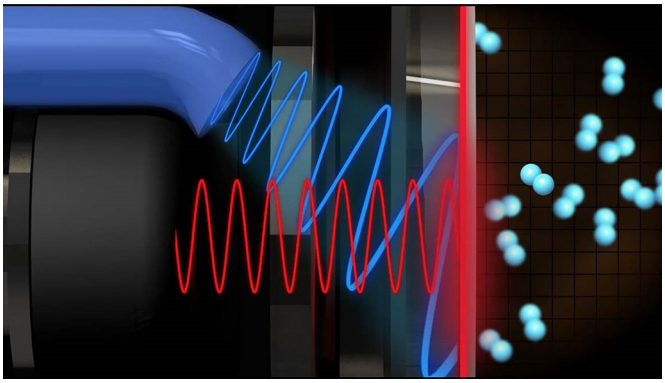

Fig. 3 Lumiphore molecules are excited by blue light causing them to emit red light that is detected by the photodiode

Fast response
The patented signal processing within the Aztec ADS430 RDO sensor enables up to 5 times faster response times to changes in process conditions than other optical systems; delivering improved process control and maximum process savings.

Withstands harsh conditions
The abrasion-resistant sensing element withstands fouling, high sediment loads and rapid flow rates. The lumiphore is not affected by photobleaching or stray light. In addition, unlike membrane-based sensors, the Aztec ADS430 RDO sensor is unaffected by sulfides, sulfates, hydrogen sulfide, carbon dioxide, ammonia, pH, chloride and other interferences.

The Aztec ADS430 RDO Pro-X sensor is constructed from inert, non-corrosive materials making it suitable for use in high-salinity environments.

EPA-approved technology
The US Environmental Protection Agency (EPA) has approved RDO methods for use in their Clean Water Act programs.

NPDES permit holders can use the Aztec ADS430 RDO PRO-X sensor for monitoring influent, effluent and treatment processes.

Known interferents
There are some known interferents such as: alcohols > 5 %; hydrogen peroxide > 3 %; sodium hypochlorite (commercial bleach) > 3 %; gaseous sulfur dioxide; gaseous chlorine. Organic solvents and certain petroleum-based hydrocarbons may swell the sensing element and destroy it. Examples include, but are not limited to, acetone; chloroform; methylene chloride and BTEX (benzene, toluene, ethylbenzene, xylene) compounds.

Easy-to-use and maintain

The Aztec ADS430 RDO PRO-X sensor features ABB's EZLink technology to provide plug-and-play measurement with ABB's latest digital transmitters. This has created the easiest-to-use and maintain monitoring system on the market today.

EZLink

- No wiring, no complicated sensor set-up or configuration; simply connect the sensor using the ESC and the transmitter configures the sensor set-up automatically.

No calibration required

- The Aztec ADS430 RDO PRO-X sensor is not susceptible to drift due to the use of a non-consumptive, non-reactive method of measurement.
- To eliminate programming errors, the sensor cap is pre-loaded with factory calibration coefficients, serial number, lifetime indication and date of manufacture. These are uploaded to the Aztec ADS430 sensor automatically; simply snap on the SmartCap and start measuring!

Fig. 4 Aztec ADS430 SmartCap

Minimal maintenance

The SmartCap enables continuous operation for up to 24 months. Advanced sensor diagnostics evaluate sensor performance to provide maintenance interval alerts.

In applications where high biofouling is expected, the Aztec ADS430 RDO sensor can be used with ABB's EZClean system that cleans the sensor surface automatically with a powerful jet of air.

Fig. 5 ABB EZClean system

Mounting options

ABB offer a range of mounting options for the Aztec ADS430 RDO sensor.

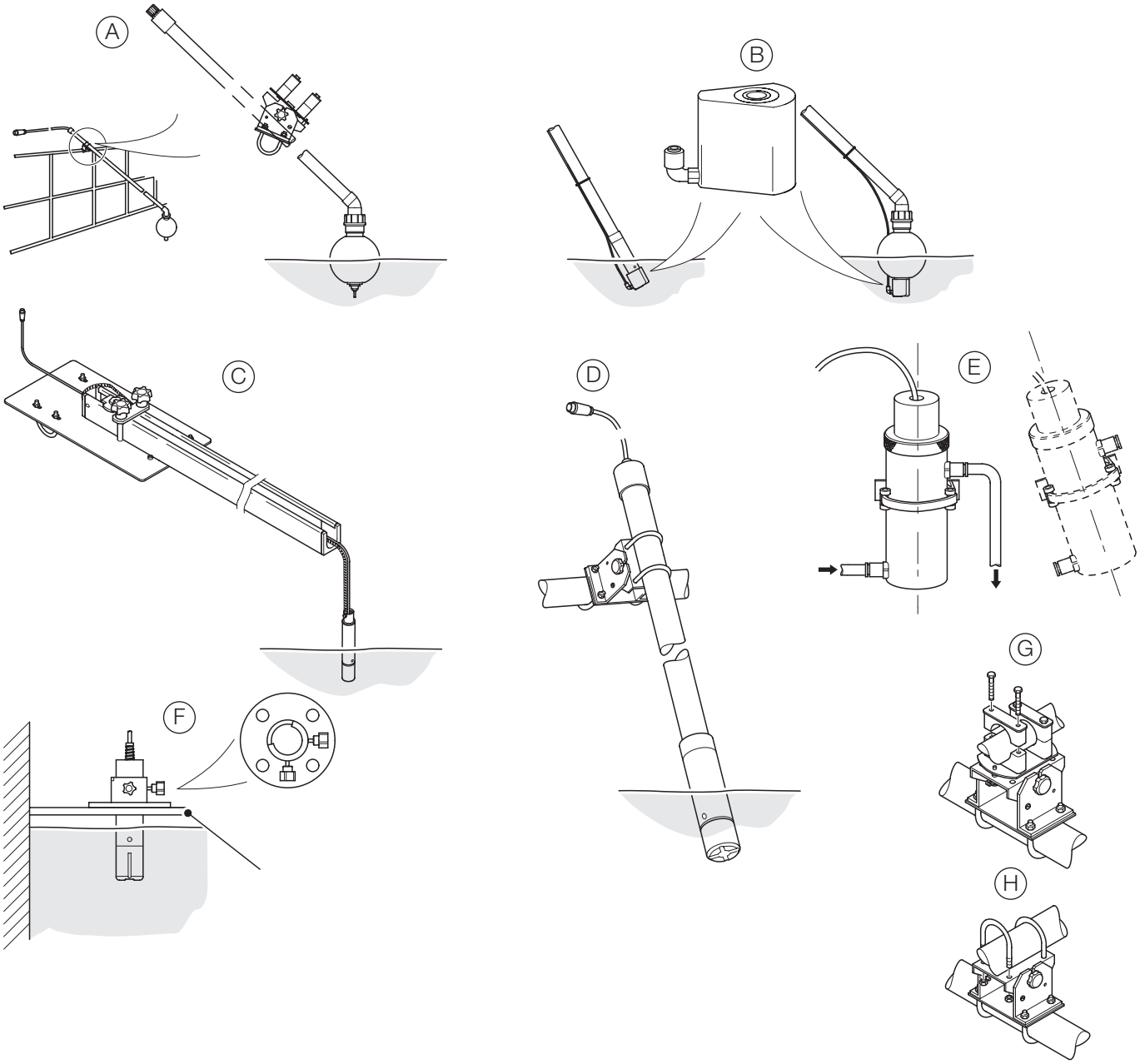

Item	Mounting option
A	Floating ball assembly: ADS430110 (including boom), or floating ball assembly kit: ADS430120 (excluding boom) suitable for handrail mounting using swivel / tilt bracket (G) or tilt bracket (H)
B	EZClean cleaning system: ADS430170 shown fitted to dip pole and floating ball assembly
C	Open channel and open tank mounting kit: ADS430140 suitable for floor / wall (surface) mounting
D	Dip / pole assembly: ADS430100 (including dip pole), or pole mounting adaptor kit: ADS430105 (excluding dip pole) handrail-mounted using tilt bracket (H)

Item	Mounting option
E	Flowcell pipeline mount: ADS430160 suitable for wall (surface) mounting (includes wall mounting clip)
F	Open tank flanged dip mount: ADS430150 for mounting on user-supplied mounting bracket
G	Handrail mounting bracket – swivel / tilt: ADS430130: for 42 mm (1.7 in.) handrail ADS430135: for 50 mm (2.0 in.) handrail
H	Handrail mounting bracket – tilt (standard): ADS430125: for 42 mm (1.7 in.) handrail ADS430128: for 50 mm (2.0 in.) handrail

Specification

Sensor type

Optical (luminescent) dissolved oxygen sensor

Probe

IP rating

IP68

Range

0 to 50 mg/l concentration; 0 to 600 % saturation

Accuracy

- ±0.1 mg/l, 0 to 8 mg/l
- ±0.2 mg/l, 8 to 20 mg/l
- ±10 % of reading, 20 to 50 mg/l

Resolution

0.01 mg/l

Response time

T90 < 45 sec; T95 < 60 sec @ 25 °C (77 °F)

Storage conditions

–5 to 60 °C (23 to 140° F)

Dimensions

- 47 mm (1.85 in.) diameter
- 203 mm (8 in.) length

Probe internal mounting thread

1¼ NPT

Sensor cap

Typical working life

2 years

IP rating

IP68 (when fitted)

Storage conditions

1 to 60 °C (33° to 140° F) in factory container

Temperature sensor

Operating temperature range

0 to 50 °C (32 to 122° F)

Accuracy

±0.1 °C typical

Resolution

±0.01 °C

Power

Consumption (maximum)

50 mA @ 12 V DC

Measurement current

6 mA typical @ 24 V DC

Idle current (no measurement or consumption)

160 A typical @ 24 V DC

Cable

Fixed length

10 m (32.8 ft.)

EZLink digital sensor connector IP rating

IP67 (when connected)

Extension cable (options)

1, 5, 10, 15, 25, 50 m (3.2, 16.4, 32, 49.2, 82, 164 ft.)

Maximum length (including optional extension cable)

Up to 60 m (196.8 ft.)

Salinity compensation

0 to 42 PSU (ppt)

Barometric pressure

506 to 1114 mbar (380 to 835 mm/Hg)

Environmental ratings

Pressure

- 10.342 bar (150 psi) from 0 to 50 °C (32 to 122 °F),
- 20.468 bar (300 psi) @ 25 °C (77 °F)

Operating temperature range

0 to 50 °C (32 to 122 °F)

Compliance

Heavy industrial, IEC:61000-6-2:2005

Methods

- Standard methods 4S00-0
- In-Situ methods 1002-8-2009, 1003-8-2009, 1004-8-2009 (EPA approved)

Materials of construction

Sensor cap

PC / PMMA

Probe body

ABS

Temperature sensor

Titanium

Cable

Polyurethane

Dimensions

All dimensions in mm (in.).

Probe

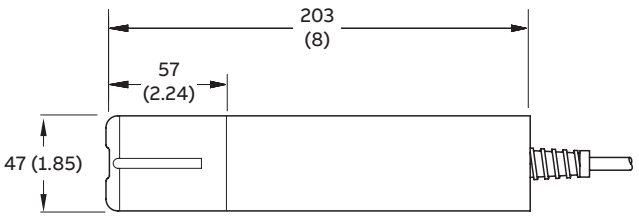

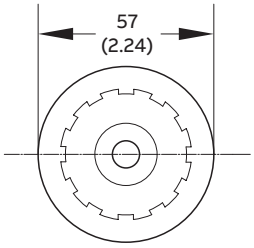

Accessories

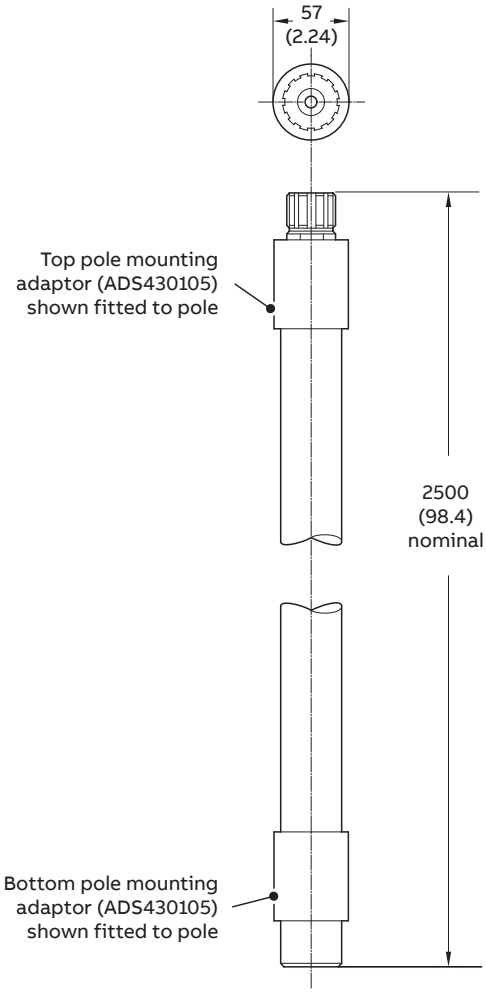

Fig. 6 ADS430100 dip pole assembly for in situ probe

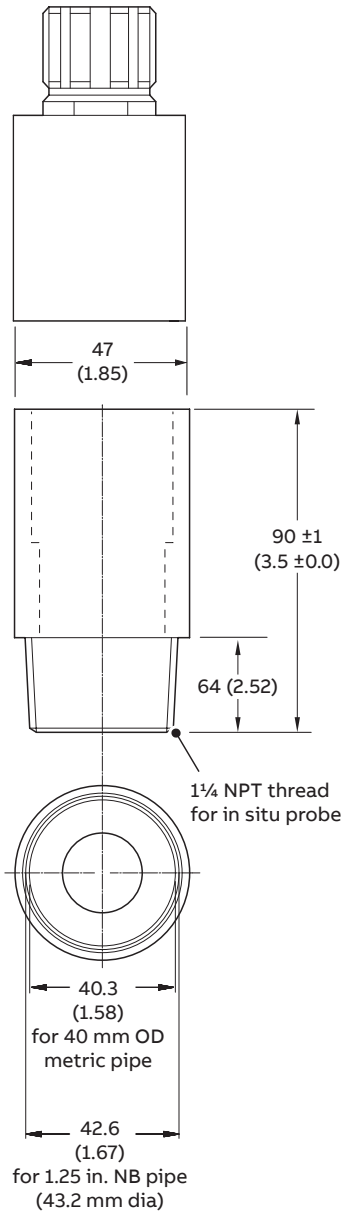

Fig. 7 ADS430105 pole mounting adaptor kit

...Dimensions

All dimensions in mm (in.).

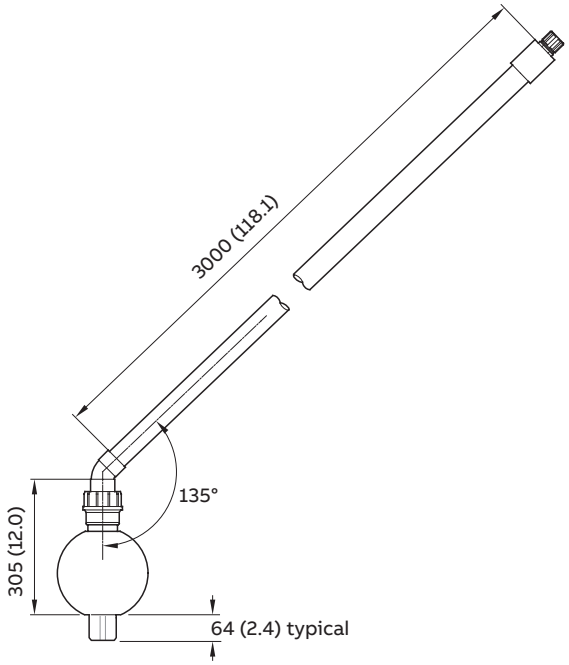

Fig. 8 ADS430110 floating ball assembly

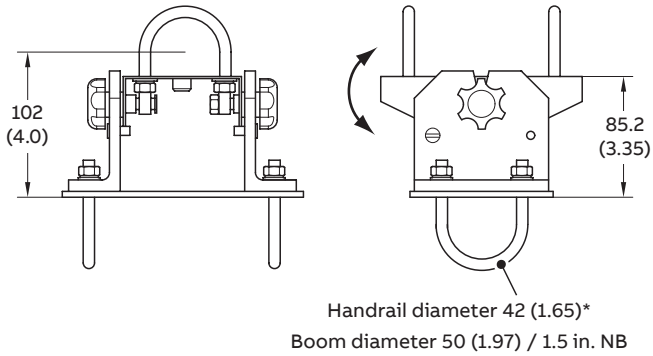

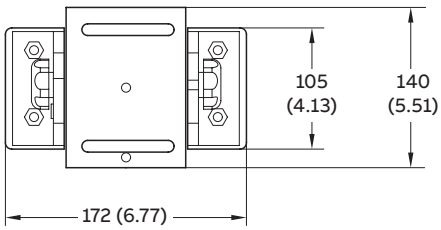

* Handrail diameter is 50 mm (1.97) on part number: ADS430128

Fig. 9 ADS430125 floating ball mounting bracket assembly

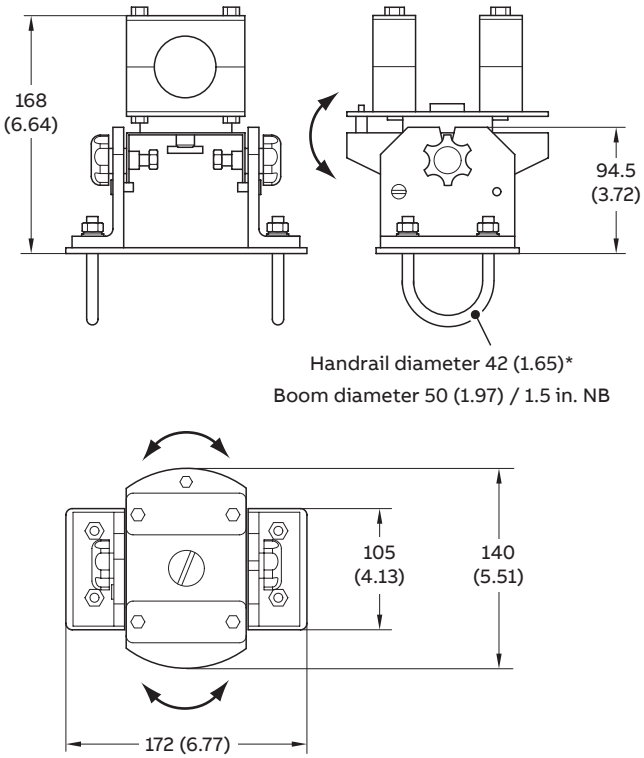

* Handrail diameter is 50 mm (1.97) on part number: ADS430135

Fig. 10 ADS430130 floating ball mounting bracket assembly swivel version

All dimensions in mm (in.).

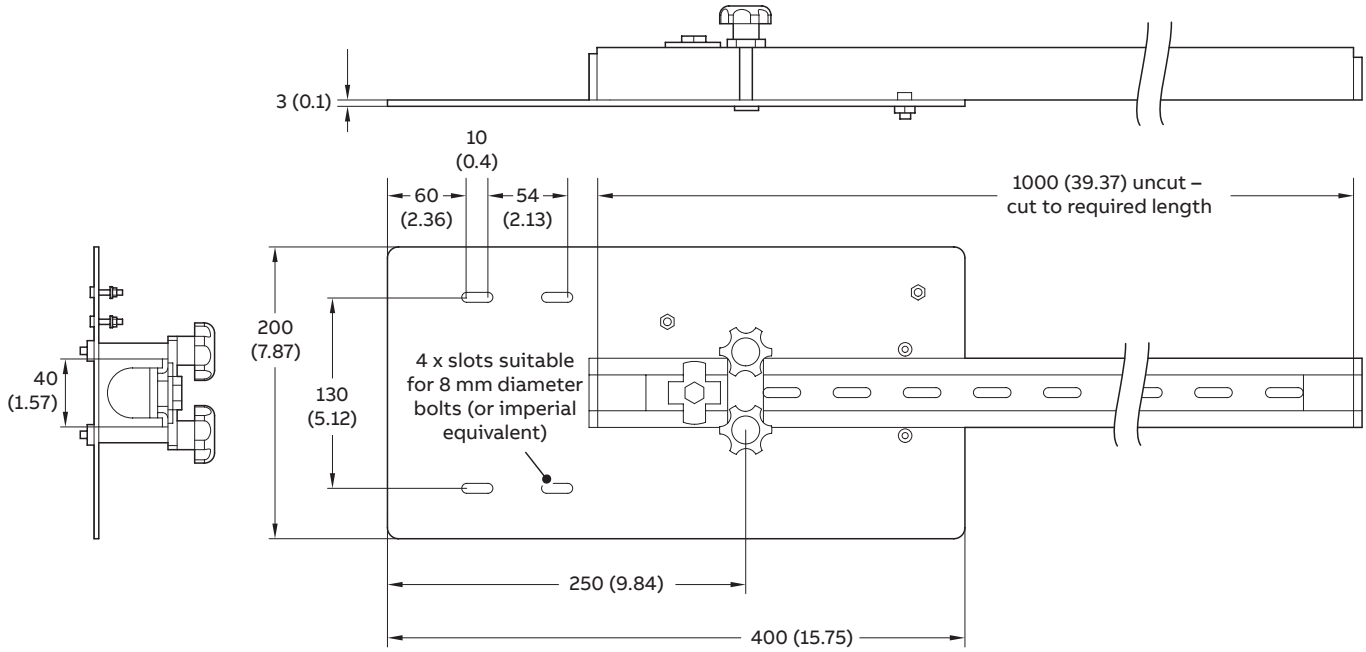

Fig. 11 ADS430140 open channel mounting kit

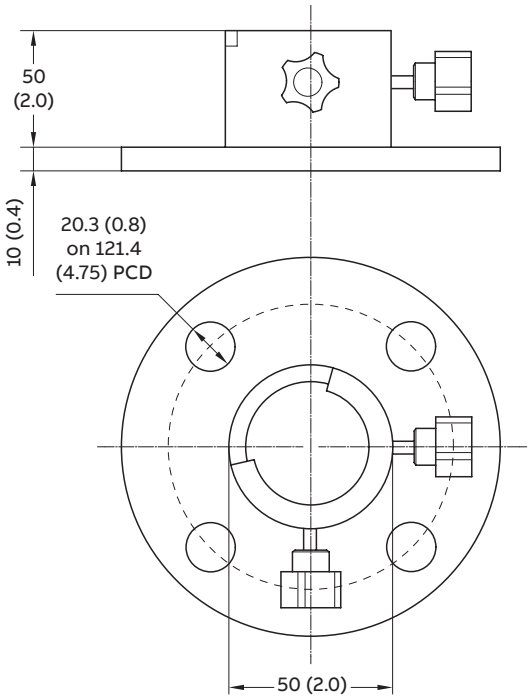

Fig. 12 ADS430150 open tank flanged dip mounting kit

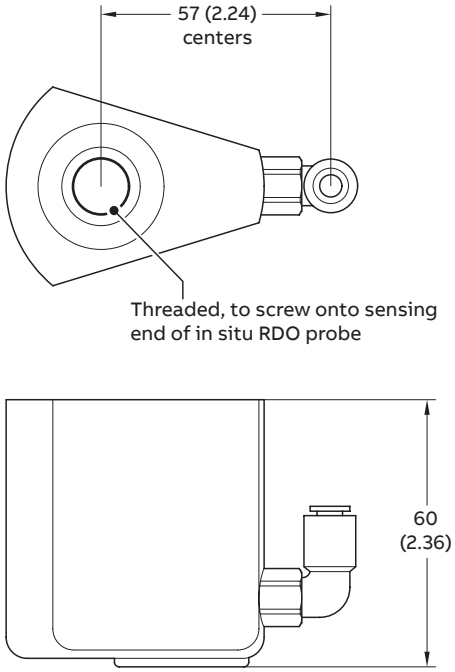

Fig. 13 ADS430170 EZClean adapter assembly

...Dimensions

All dimensions in mm (in.).

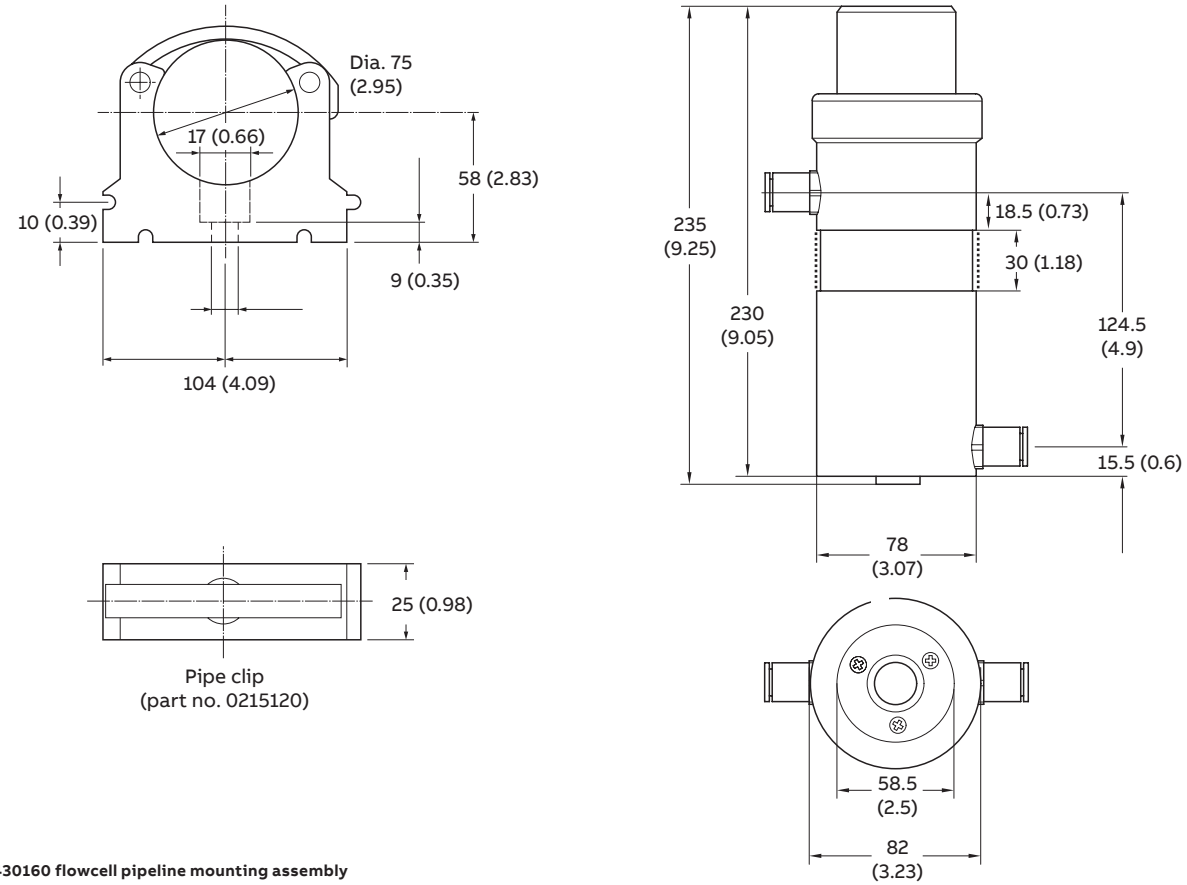

Fig. 14 ADS430160 flowcell pipeline mounting assembly

EZClean system

Dimensions in mm (in.)

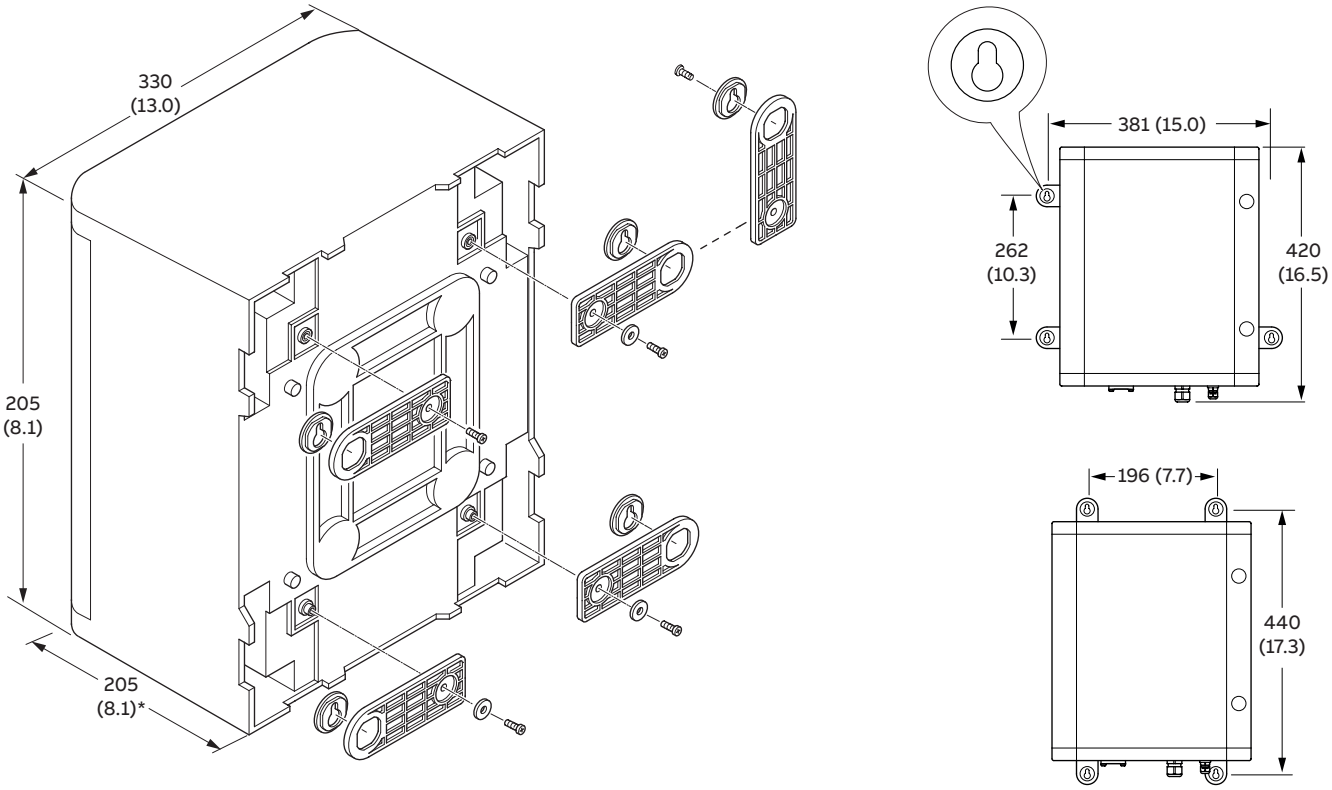

*Add 280 (11.0) when door open

Fig. 15 Wall-mounting

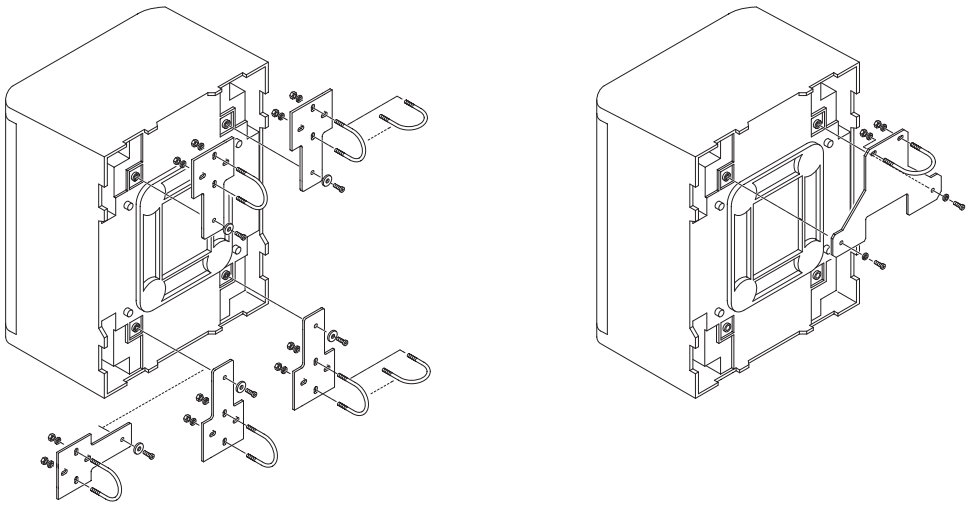

Fig. 16 Optional handrail and pole-mounting installations

Ordering information

		Main code					Options		
Aztec ADS430 RDO® PRO-X optical dissolved oxygen sensing system	**ADS430/**	**X**	**X**	**XX**	**XX**	**XX**	**XXX**	**XX**	**XX**
Build revision									
Reserved		A							
Sensor type									
Optical (luminescent) dissolved oxygen sensor			1						
Probe attachment									
Not supplied				Y0					
Dip probe assembly supplied with 8.2 ft. (2.5 m) imperial pole				D1					
Dip probe mounting adapter kit for use with customer-supplied pole				D5					
Floating ball assembly supplied with 3 m (9.8 ft.) metric pole				B1					
Floating ball assembly kit for use with customer-supplied pole				B5					
Chain-mount adapter supplied with 3 m (9.8 ft.) of chain				C1					
Flowcell				F1					
Mounting accessories									
Not supplied					Y0				
Handrail mounting bracket for dip or floating ball systems (for use with 42 mm (1.7 in.) diameter handrail)					H1				
Handrail mounting bracket for dip or floating ball systems (for use with 50 mm (2.0 in.) diameter handrail)					H2				
Swivel-and-tilt action handrail mounting bracket for floating ball systems only (for use with 42 mm (1.7 in.) diameter handrail)					H3				
Swivel-and-tilt action handrail mounting bracket for floating ball systems only (for use with 50 mm (2.0 in.) diameter handrail)					H4				
Chain mounting bracket for use with chain-mount adapter					C1				
EZClean options									
Not supplied						Y0			
EZClean adapter (not suitable for flowcell installations)						A1			
EZClean system for dip, floating ball or chain-mount installations 230 V AC (supplied with compressor, adapter and tubing kit)						A2			
EZClean system for flowcell installations 230 V AC (supplied with compressor and tubing kit)						A3			
EZClean system for dip, floating ball or chain-mount installations 115 V AC (supplied with compressor, adapter and tubing kit)						A4			
EZClean system for flowcell installations 115 V AC (supplied with compressor and tubing kit)						A5			
Optional ordering code									
Add one or more of the following codes after the standard ordering information to select any additional options if required.									
Sensor extension cable									
EZLink digital sensor extension cable – 5 m (16.4 ft.)							E05		
EZLink digital sensor extension cable – 10 m (32.8 ft.)							E10		
EZLink digital sensor extension cable – 15 m (49.2 ft.)							E15		
EZLink digital sensor extension cable – 25 m (82 ft.)							E25		
EZLink digital sensor extension cable – 50 m (164 ft.)							E50		
Documentation language (supplied as standard in English)									
German								M1	
Italian								M2	
Spanish								M3	
French								M4	
English								M5	
Mounting options for EZClean system (supplied as standard with wall-mounting kit)									
EZClean handrail-mounting kit									G1
EZClean pole-mounting kit									G2

Acknowledgements

In-Situ and RDO are registered trademarks or trademarks of In-Situ Inc.

Sales

Service

Software

Castel Maggiore (BO) 40013
Via Lirone 60/i

e-mail: info@eurotecsrl.com
Tel: +39 051/6321595
Website: www.eurotecsrl.com

C.F.: 04103780377
P.I.: 01596581205

—

ABB Limited
Measurement & Analytics
Howard Road, St. Neots
Cambridgeshire, PE19 8EU
UK
Tel: +44 (0)870 600 6122
Fax: +44 (0)1480 213 339
Mail: enquires.mp.uk@gb.abb.com

ABB Inc.
Measurement & Analytics
125 E. County Line Road
Warminster, PA 18974
USA
Tel: +1 215 674 6000
Fax: +1 215 674 7183

abb.com/measurement

We reserve the right to make technical changes or modify the contents of this document without prior notice. With regard to purchase orders, the agreed particulars shall prevail.
ABB does not accept any responsibility whatsoever for potential errors or possible lack of information in this document.

We reserve all rights in this document and in the subject matter and illustrations contained therein. Any reproduction, disclosure to third parties or utilization of its contents – in whole or in parts – is forbidden without prior written consent of ABB.

© Copyright 2017 ABB.
All rights reserved.

3KXA494430R1001

DS/ADS430-EN Rev. E 11.2017