ABB MEASUREMENT & ANALYTICS | DATA SHEET

266MST

Differential pressure transmitters

Measurement made easy
Engineered solutions for all applications

Base accuracy
- 0.04 % of calibrated span (optional, 0.025 %)

Proven sensor technology together with state–of–the–art digital technology
- Large turn down ratio of up to 100:1

Comprehensive sensor selection
- Optimized overall performance and stability

10–year stability
- 0.15 % of URL

Flexible configuration options
- Local configuration via operating buttons on LCD indicator

New TTG (Through–The–Glass) keypad technology
- Enables quick and easy local configuration without the need to open the cover – even in explosion proof environments

IEC 61508 certification
- For SIL2– (1oo1) and SIL3– (1oo2) applications

Full compliance with Pressure Equipment Directive (PED) category III

Product in compliance with Directive 2011/65/UE (RoHS II)

In-built advanced diagnostics

Specification – functional

Range and span limits

Sensor code	Upper range limit (URL)	Lower range limit (LRL)	Minimum measuring span
A	1 kPa 10 mbar 4 inH2O	–1 kPa –10 mbar –4 inH2O	0.05 kPa 0.5 mbar 0.2 inH2O
C	6 kPa 60 mbar 24 inH2O	–6 kPa –60 mbar –24 inH2O	0.2 kPa 2 mbar 0.8 inH2O
F	40 kPa 400 mbar 160 inH2O	–40 kPa –400 mbar –160 inH2O	0.4 kPa 4 mbar 1.6 inH2O
L	250 kPa 2500 mbar 1000 inH2O	–250 kPa –2500 mbar –1000 inH2O	2.5 kPa 25 mbar 10 inH2O
N	2000 kPa 20 bar 290 psi	–2000 kPa –20 bar –290 psi	20 kPa 0.2 bar 2.9 psi
R	10000 kPa 100 bar 1450 psi	–10000 kPa –100 bar –1450 psi	100 kPa 1 bar 14.5 psi

Second sensor of the 266MST differential pressure transmitter for absolute pressure measurement

Measuring range: 41 MPa, 410 bar, 5945 psi (2 MPa, 20 bar, 290 psi for sensor code A)

Span limit

Maximum span = URL
(can be adjusted for differential pressure transmitters up to ± URL (TD = 0.5) within the measuring range limits)

NOTICE

To optimize performance characteristics, it is recommended that you select the transmitter sensor code with the lowest turn down ratio.

Recommendation for square root function

At least 10 % of upper measuring range limit (URL)

Zero position suppression and elevation

The zero position and span can be set to any value within the measuring range limits listed in the table if:

- adjusted span ≥ smallest span

Damping

Configurable time constant between 0 and 60 s.
This is in addition to the sensor response time.

Warm–up time

Ready for operation as per specifications in less than 10 s with minimum damping

Insulation resistance

> 100 MΩ at 500 V DC (between terminals and ground)

Specification – operative limits

Pressure limits

Overpressure limits

The differential pressure transmitters, models 266MST, work without damage within the following pressure limits:

Sensors	Filling fluid	Overpressure limits
Sensor A	Silicone oil	0.5 kPa abs., 5 mbar abs., 0.07 psia and 2 MPa, 20 bar, 290 psi
Sensor A	Inert (Galden)	17.5 kPa abs., 175 mbar abs., 2.5 psia and 2 MPa, 20 bar, 290 psi
Sensors C to R	Silicone oil	0.5 kPa abs., 5 mbar abs., 0.07 psia and 16 MPa, 160 bar, 2320 psi, or 25 MPa, 250 bar, 3625 psi, or 41 MPa, 410 bar, 5945 psi or 60 MPa, 600 bar, 8700 psi depending on code variant selected *
Sensors C to R	Inert (Galden)	17.5 kPa abs., 175 mbar abs., 2.5 psia and 16 MPa, 160 bar, 2320 psi, or 25 MPa, 250 bar, 3625 psi, or 41 MPa, 410 bar, 5945 psi or 60 MPa, 600 bar, 8700 psi depending on code variant selected *

* 1 MPa, 10 bar, 145 psi for Kynar–PVDF

Static pressure limits

The differential pressure transmitters, models 266MST, work within the specifications with the following limit values:

Sensors	Filling fluid	Static pressure limits
Sensor A	Silicone oil	3.5 kPa abs., 35 mbar abs., 0.5 psia and 2 MPa, 20 bar, 290 psi
Sensor A	Inert (Galden)	17.5 kPa abs., 175 mbar abs., 2.5 psia and 2 MPa, 20 bar, 290 psi
Sensors C to R	Silicone oil	3.5 kPa abs., 35 mbar abs., 0.5 psia and 16 MPa, 160 bar, 2320 psi, or 25 MPa, 250 bar, 3625 psi, or 41 MPa, 410 bar, 5945 psi or 60 MPa, 600 bar, 8700 psi depending on code variant selected *
Sensors C to R	Inert (Galden)	17.5 kPa abs., 175 mbar abs., 2.5 psia and 16 MPa, 160 bar, 2320 psi, or 25 MPa, 250 bar, 3625 psi, or 41 MPa, 410 bar, 5945 psi or 60 MPa, 600 bar, 8700 psi depending on code variant selected *

* 1 MPa, 10 bar, 145 psi for Kynar–PVDF

Test pressure

The pressure transmitters can withstand a pressure test with the following line pressure without leakage:
266MST, up to 1.5 x nominal pressure (static pressure limit) simultaneously on both sides.
Meets hydrostatic test requirements of ANSI/ISA S 82.03.

Temperature limits °C (°F)

Environment

This is the operating temperature.

Model 266MST	Ambient temperature limits
Silicone oil	–40 to 85 °C (–40 to 185 °F)
Inert (Galden)	–40 to 85 °C (–40 to 185 °F)
Maximum operating pressure 60 MPa, 600 bar, 8700 psi	–20 to 70 °C (–4 to 158 °F)

NOTICE

For applications in explosive environments, the temperature range specified on the certificate / approval which depends upon the type of protection sought shall apply.

Model 266MST	Ambient temperature limits
Integral LCD display	–40 to 85 °C (–40 to 185 °F)
Viton gasket	–20 to 85 °C (–4 to 185 °F)
PTFE gaskets	–20 to 85 °C (–4 to 185 °F)

It may no longer be possible to read the LCD display clearly below –20 °C (–4 °F) and above 70 °C (158 °F).

Process

Model 266MST	Process temperature limits
Silicone oil	–40 to 121 °C (–40 to 250 °F) *
Inert (Galden)	–40 to 121 °C (–40 to 250 °F) **
Viton gaskets	–20 to 121 °C (–4 to 250 °F)
PTFE gaskets	–20 to 85 °C (–4 to 185 °F)
Maximum operating pressure 60 MPa, 600 bar, 8700 psi	–20 to 85 °C (–4 to 185 °F)

* 85 °C (185 °F) for applications under 10 kPa, 100 mbar abs., 1.45 psia up to 3.5 kPa abs., 35 mbar abs., 0.5 psia
** 85 °C (185 °F) for applications under atmospheric pressure up to 17.5 kPa abs., 175 mbar abs., 2.5 psia

Storage

Model 266MST	Storage temperature range
Storage temperature	–50 to 85 °C (–58 to 185 °F)
Integral LCD display	–40 to 85 °C (–40 to 185 °F)

Humidity during storage	
Relative humidity	Up to 75 %

...Specification – operative limits

Limits for environmental effects

Electromagnetic compatibility (EMC)

In accordance with EN 61326 and Namur NE–21 (option).
Overvoltage strength in accordance with IEC 1000–4–5 EN 61000–4–5 (with overvoltage protection): 4 kV

Pressure Equipment Directive (PED)

The instruments with maximum operating pressure of 25 MPa, 250 bar, 3625 psi or 41 MPa, 410 bar, 5945 psi or 60 MPa, 600 bar, 8700 psi comply with the guideline 2014/68/EU category III module H.

Humidity

Relative humidity: up to 100 %.
Condensation, icing: permitted.

Vibration resistance

Acceleration up to 2 g at frequencies of up to 1000 Hz (according to IEC 60068-2-6).
Acceleration limited to 1 g for housing out of stainless steel.

Shock resistance

In accordance with IEC 60068–2–27
Acceleration: 50 g
Duration: 11 ms

IP rating

In accordance with EN 60529, JIS C0920
The transmitter is dust and sand proof and protected against immersion effects.

- IP 67, IP 68 on request, NEMA 4X
- IP 65 (devices with Harting Han plug connector)
- IP 66 (devices with barrel housing made from aluminum or stainless steel housing)

Hazardous atmospheres

With or without integral display

INTRINSIC SAFETY Ex ia:

- ATEX Europe (code E1) approval
  II 1 G Ex ia IIC T6...T4 Ga, II 1/2 G Ex ia IIC T6...T4 Ga/Gb, II 1 D Ex ia IIIC T85 °C Da, II 1/2 D Ex ia IIIC T85 °C Da; IP66, IP67.
- IECEx (code E8) approval
  Ex ia IIC T6...T4 Ga/Gb, Ex ia IIIC T85 °C Da; IP66, IP67.
- NEPSI China (code EY)
  Ex ia IIC T4/T5/T6 Ga, Ex ia IIC T4/T5/T6 Ga/Gb, Ex iaD 20 T85/T100/T135, Ex iaD 20/21 T85/T100/T135.

EXPLOSION PROOF:

- ATEX Europe (code E2) approval
  II 1/2 G Ex db IIC T6 Ga/Gb Ta=–50 °C to +75 °C, II 1/2 D Ex tb IIIC T85 °C Db Ta = –50 °C to +75 °C; IP66, IP67.
- IECEx (code E9) approval
  Ex db IIC T6 Ga/Gb Ta=–50 °C to +75 °C, Ex tb IIIC T85 °C Db Ta = –50 °C to +75 °C; IP66, IP67.
- NEPSI China (code EZ)
  Ex d IIC T6 Gb, Ex tD A21 IP67 T85 °C.

INTRINSIC SAFETY Ex ic:

- ATEX Europe (code E3) type examination
  II 3 G Ex ic IIC T6...T4 Gc, II 3 D Ex tc IIIC T85 °C Dc; IP66, IP67.
- IECEx (code ER) type examination
  Ex ic IIC T6...T4 Gc, Ex tc IIIC T85 °C Dc; IP66, IP67.
- NEPSI China (code ES) type examination
  Ex ic IIC T4~T6 Gc, Ex tD A22 IP67 T85 °C.

FM Approvals US (code E6) and
FM Approvals Canada (code E4):

- Explosionproof (US): Class I, Division 1, Groups A, B, C, D; T5
- Explosionproof (Canada): Class I, Division 1, Groups B, C, D; T5
- Dust-ignitionproof: Class II, Division 1, Groups E, F, G, Class III, Division 1; T5
- Flameproof (US): Class I, Zone 1 AEx d IIC T4 Gb
- Flameproof (Canada): Class I, Zone 1 Ex d IIC T4 Gb
- Nonincendive: Class I, Division 2, Groups A, B, C, D T6...T4
- Energy limited (US): Class I, Zone 2 AEx nC IIC T6...T4
- Energy limited (Canada): Class I, Zone 2 Ex nC IIC T6...T4
- Intrinsically safe: Class I, II, III, Division 1, Groups A, B, C, D, E, F, G T6...T4
  Class I, Zone 0 AEx ia IIC T6...T4 (US)
  Class I, Zone 0 Ex ia IIC T6...T4 (Canada)

Type 4X, IP66, IP67 for all above markings.

COMBINED FM Approvals US and Canada

- Intrinsically safe (code EA)

COMBINED ATEX, FM and IECEx Approvals (code EN)
Technical Regulations Customs Union EAC (Russia, Kazakhstan, Belarus), Inmetro (Brazil)

The permissible ambient temperature ranges (within the limits of -50 to 85 °C) are specified in the type examination certificates dependent upon the temperature class.

Specification – electrical data and options

HART® digital communication and 4 to 20 mA output

Device type

1a07hex (listed at the FieldComm Group)

Power supply

The transmitter operates in an operating voltage range of 10.5 – 42 V DC with no load and is protected against reversed polarity (additional loads enable operation above 42 V DC).
During use in Ex ia zones and in other intrinsically safe applications, the operating voltage must not up–scale 30 V DC.

Minimum operating voltage	
12.3 V DC	Device with the option “S2 – overvoltage protection”
10.8 V DC	Devices with the option “YE – NE21 conformity”

Ripple

Maximum 20 mV over a 250 Ω load in accordance with HART specifications.

Load limitations

Total loop resistance at 4 to 20 mA and HART:

$$R\ (k\,\Omega) = \frac{\text{Supply voltage - minimum operating voltage (V DC)}}{22\ \text{mA}}$$

A minimum resistance of 250 Ω is required for HART communication.

Overvoltage protection (optional)

Up to 4 kV

- Voltage: 1.2 µs rise time / 50 µs delay time to half the value
- Voltage: 8 µs rise time / 20 µs delay time to half the value

Output signal

Two–wire output 4 – 20 mA, selectable by the operator: linear or square root output signal, characteristic curve with the exponents 3/2 or 5/2, square root for bidirectional flow, linearization table with 22 points (i.e. for level measurements in lateral, cylindric containers and spherical containers).
The HART communication provides the digital process variables which are superimposed on the 4 to 20 mA signal (protocol in accordance with Bell 202 FSK standard).

HART protocol
HART revision 7 (standard, as default)
HART revision 5 (optional, on request)

Output current limits (in accordance with NAMUR standard)

Overload condition

- Lower limit: 3.8 mA (configurable from 3.8 – 4 mA)
- Upper limit: 20.5 mA (configurable from 20 – 21 mA)

Alarm current

Adjustment range	
Minimum alarm current (low alarm current)	3.6 mA (configurable from 3.6 – 4 mA)
Maximum alarm current (high alarm current)	21 mA (configurable from 20 – 23 mA)
Maximum alarm current (high alarm current) for devices with “HART SIL – functional safety”	Limited to maximum 22 mA! (From electronic version 7.1.15)

Standard setting: high alarm current

...Specification – electrical data and options

FOUNDATION Fieldbus™ output

DeviceType

Link–Master
The Link Active Scheduler (LAS) capability is implemented.
Manufacturer code: 000320 (hex)
Device type code: 0007 (hex)

Power supply

The transmitter works in a operating voltage area of 9 to 32 V DC, independent of the polarity with or without overvoltage protection.
During use in Ex ia zones, the operating voltage must not exceed 24 V DC (object certification) or 17.5 V DC (FISCO certification) in accordance with FF–816.

Input Current

Operation (quiescent current): 15 mA
Residual current limit value 20 mA maximum

Output signal

Physical layer in accordance with IEC 11582 / EN 611582, transmission with Manchester II modulation with 31.25 kBit/s.

Function blocks / cycle time

3 extended analog input blocks / 25 ms max. (each)
1 extended PID block / 40 ms max.
1 Standard Arithmetic block / 25 ms
1 Standard Input Selector block / 25 ms
1 Standard Control Selector block / 25 ms
1 Standard Signal Characterization block / 25 ms
1 Standard Integrator / Totalizer block / 25 ms

Additional blocks

1 extended Resource Block
1 manufacturer–specific Pressure with Calibration Transducer Block
1 manufacturer–specific Advanced Diagnostics Transducer Block with recognition of clogged impulse lines
1 manufacturer–specific local display transducer Block

Number of link objects

35

Number of VCRs

35

Output interface

FOUNDATION Fieldbus digital communication protocol in accordance with standard H1, fulfills the specification V 1.7

Operating mode during transmitter malfunction

The output signal will be “frozen” to the last value in case of severe transmitter errors, if this is recognized by the self–diagnosis, which also shows error conditions.
In case of electronic errors or short–circuits, the current consumption is electronically limited to a set value (approx. 20 mA) for the safety of the network.

Damping

Configurable time constant between 0 and 60 s.
This is in addition to the sensor response time, and can be adjusted via the optional LCD indicator, handheld terminal, or PC user interface.

Warm–up time

Ready for operation as per specifications in less than 10 s with minimum damping.

Insulation resistance

>100 MΩ at 500 V DC (between terminals and ground).

PROFIBUS PA output

DeviceType

Pressure transmitter conform with profile 3.0.1
Indent number: 3450 (hex)

The transmitter works in a operating voltage area of 9 to 32 V DC, independent of the polarity with or without overvoltage protection.
During use in EEx ia zones, the operating voltage must not exceed 17.5 V DC.
Intrinsically safe installation in accordance with the FISCO model.

Input Current

Operation (quiescent current): 15 mA
Residual current limit value 20 mA maximum

Output signal

Physical layer in accordance with IEC 1158–2 / EN 61158–2, transmission with Manchester II modulation with 31.25 kBit/s.

Output interface

PROFIBUS PA communication in accordance with PROFIBUS DP 50170 part 2 / DIN 19245 part 1–3

Output cycle time

25 ms

Data blocks

266MST:

1 “Physical Block”
3 “Analog Input” blocks
1 “Pressure Transducer Block” with calibration
1 “Transducer Block Advanced Diagnostics” with recognition of clogged impulse lines
1 “Transducer Block” local display

Operating mode during transmitter malfunction

In case of heavy transmitter errors, which are recognized by self–diagnosis, the output signal can be put into defined states, which can be chosen by the operator: safe, most recent or calculated value.
In case of electronic errors or short–circuits, the current consumption is electronically limited to a set value (approx. 20 mA) for the safety of the network.

LCD display

M10142

Figure 1 LCD display (example)

Integral LCD display (code L1)

Wide screen LCD display, 128 x 64 pixel, 52.5 x 27.2 mm (2.06 x 1.07 in), dot matrix, multilingual.
Four buttons for device configuration and management.
Easy setup for quick commissioning.
Customized visualizations which the user can select.
Total value and actual value flow indication.
The display can also be used to show static pressure, sensor temperature, and diagnosis notice, as well as make configuration settings.

Integral LCD display with TTG–(Through–The–Glass) operation (code L5)

As with the integral LCD display above, but featuring an innovative TTG (Through–The–Glass) button technology which can be used to activate the device's configuration and management menus without having to remove the transmitter housing cover.
The TTG (Through–The–Glass) buttons are protected against accidental activation.

Specification - measuring accuracy

Reference conditions in accordance with IEC 60770.
Ambient temperature 20 °C (68 °F), rel. humidity 65 %, atmospheric pressure 1,013 hPa (1,013 mbar), position of measuring cell (separating diaphragm areas) vertical, measuring span based on zero point, separating diaphragms made from stainless steel AISI 316 L or Hastelloy, silicone oil filling fluid, HART digital trim values equal to 4 and 20 mA span end points, linear characteristic curve.
Unless otherwise stated, errors are specified as a % of the span value.
Some measuring accuracy levels relating to the upper measuring range limit (URL) are affected by the current turn down (TD); i.e., the ratio of the upper measuring range limit to the already set span.
FOR OPTIMUM MEASURING ACCURACY, IT IS RECOMMENDED THAT YOU SELECT THE SENSOR CODE WHICH WILL PROVIDE THE LOWEST TD VALUE.

Dynamic response (in accordance with IEC 61298–1)

Sensors	Time constant (63.2 % of total step response)
Sensors F to R	150 ms
Sensor C	400 ms
Sensor A	1000 ms
Reaction time for all sensors	40 ms

Response time (total) = delay time + time constant

Measuring error

In % of calibrated span, consisting of terminal–based non–linearity, hysteresis, and non repeatability.
In the case of fieldbus devices, SPAN refers to the analog input function block output scaling.

Model	Sensor	For TD range	
266MST	A to R	From 1:1 to 10:1	± 0.04 %
	A	From 10:1 to 20:1	± (0.04 + 0.005 x TD – 0.05) %
	C	From 10:1 to 30:1	± (0.04 + 0.005 x TD – 0.05) %
	F to R	From 10:1 to 100:1	± (0.04 + 0.005 x TD – 0.05) %
	F to N	From 1:1 to 10:1	±0.025 % (optional)

Model	Pabs sensor (second sensor for 266MST) Range: 41 MPa, 410 bar, 5945 psi (2 MPa, 20 bar, 290 psi for dp Sensor Code A)	
266MST	C to R	80 kPa, 800 mbar, 321 inH2O
	A	1.2 kPa, 12 mbar, 4.8 inH2O

Ambient temperature

per 20 K change within the limits of –40° – 85 °C (per 36 °F change within the limits of 40° – 185 °F):

Model	Sensor	For TD range	
266MST	A	10:1	±(0.06 % URL + 0.045 % span)
	C to R	10:1	±(0.03 % URL + 0.045 % span)

In the case of an ambient temperature change between –10 °C – 60 °C (14 to 140 °F):

Model	Sensor	For TD range	
266MST	A	10:1	±(0.12 % URL + 0.05 % span)
	C to R	10:1	±(0.06 % URL + 0.05 % span)

per 10 K change within the limits of –40 to –10 °C or 60 to 85 °C (per 18 °F change within the limits of –40 to 14 °F or 140 to 185 °F):

Model	Sensor	For TD range	
266MST	A	10:1	± (0.05 % URL + 0.03 % span)
	C to R	10:1	± (0.025 % URL + 0.03 % span)

Model 266MST / absolute pressure sensor

For the entire temperature range of 125 K within the limits of –40 °C to 85 °C:

– **zero signal:**

For sensors C to R:
40 kPa, 400 mbar, 160 inH2O
(absolute pressure sensor 41 MPa, 410 bar, 5945 psi)
For sensor A:
2 kPa, 20 mbar, 8 inH2O
(absolute pressure sensor 2 MPa, 20 bar, 290 psi)

– **measuring span:**

For sensors C to R:
0.3 MPa, 3 bar, 43.5 psi
(absolute pressure sensor 41 MPa, 410 bar, 5945 psi)
For sensor A:
15 kPa, 150 mbar, 60 inH2O
(absolute pressure sensor 2 MPa, 20 bar, 290 psi)

Static pressure

(zero signal errors can be calibrated under operating pressure) for operating pressure up to 60 MPa, 600 bar, 8700 psi

Measuring range	Sensor A	Sensors C, F, L, N	Sensor R
Zero signal error	Up to 2 bar: 0.05 % URL	Up to 100 bar: 0.05 % URL	Up to 100 bar: 0.1 % URL
	> 2 bar: 0.05 %	> 100 bar: 0.05 % URL/100 bar	> 100 bar: 0.1 % URL/100 bar
Span error	Up to 2 bar: 0.05 % span	Up to 100 bar: 0.05 % span	Up to 100 bar: 0.1 % span
	> 2 bar: 0.05 % Span/bar	> 100 bar: 0.05 % Span/100 bar	> 100 bar: 0.1 % Span/100 bar

Power supply

Within the limit values for the voltage / load, the total influence is less than 0.005 % of the upper measuring range limit values per volt.

Load

Within the load / voltage limits, the total influence is negligible.

Electromagnetic field

Meets all requirements of EN 61326 and NAMUR NE–21 (optional).

Common–mode interference

No influence from 100 V rms @ 50 Hz, or 50 V DC

Mounting position

Rotations in the plane of the diaphragm have a negligible effect. A tilt from the vertical of up to 90° causes a zero point shift of up to 0.35 kPa (3.5 mbar, 1.4 inH2O), which can be corrected by making an appropriate zero position adjustment. There is no effect on the measuring span.

Long–term stability

Sensors C to R:

± 0.15 % of URL over a period of 10 years (± 0.05 % URL/year)

Sensor A:

± 0.3 % of URL over a period of 10 years (± 0.2 % URL/year)

Total performance

Temperature change of 28 °C (50 °F), only 266MST: up to 10 MPa, 100 bar, 1450 psi static pressure with base accuracy option D1 (0.025%)

Model	Sensor	For TD range	Total performance (for measuring error 0.04%)
266MST	F to N	1:1	± 0.119 % of calibrated span

In the area of –10 to 60 °C (14 to 140 °F), temperature changes (DIN 16086), only 266MST: up to 10 MPa, 100 bar, 1450 psi static pressure with base accuracy option D1 (0.025 %)

Model	Sensor	For TD range	Total performance (for measuring error 0.04%)
266MST	F to N	1:1	± 0.121 % of calibrated span

The specification of total performance includes:

- the measuring error (non linearity including hysteresis and non repeatability),
- the thermal change of the ambient temperature to zero signal and measuring span
- the influence of the static pressure (only for 266MST) on the measuring span, influence on zero signal corrected after commissioning.

$$E_{Mperf} = \sqrt{(E_{\Delta Tz} + E_{\Delta Ts})^2 + E_{\Delta Ps}^{\,2} + E_{lin}^{\,2}}$$

E_{Mperf} = Total Performance
$E_{\Delta Tz}$ = Effect of the ambient temperature on the zero signal
$E_{\Delta Ts}$ = Effect of the ambient temperature on the measuring span
$E_{\Delta Ps}$ = Effect of the static pressure on the measuring span (only 266MST)
E_{lin} = Measuring error

Specification – physical

(Refer to ordering information sheets for variant availability related to specific model or versions code)

Materials

Process separating diaphragms (1)

Stainless steel 1.4435 (AISI 316L)
Hastelloy C276, Monel 400; Monel 400, gold plated; tantalum

Process flanges, adapters, screw plugs, and vent / drain valves *

Stainless steel 1.4404 / 1.4408 (AISI 316L)
Hastelloy C276; Monel 400; Kynar
(flange made of stainless steel AISI 316L with PVDF insert)

Sensor filling fluid

Silicone oil, inert fill (Galden)

Mounting bracket **

Galvanized C steel with chromium passivation; stainless steel AISI 316L.

Seals *

Viton (FPM); Buna (NBR); EPDM; PTFE or FEP–coated Viton (only for PVDF Kynar process connection); graphite

Pressure sensor housing

Stainless steel 1.4404 (AISI 316L)

Screws and nuts

Screws and nuts made from stainless steel AISI 316, class A4 70 or class A2–70 as per UNI 7323 (ISO 3506) in compliance with NACE MR0175 Class II

Electronics housing and cover

Aluminum alloy (copper content ≤ 0.3 %) with baked epoxy finish (color RAL 9002); stainless steel AISI 316L.

Cover O–ring

Buna N (Perbunan)

Operating element for local zero point, measuring span, and write protection settings

Non–intrusive design (removable) made of glass fiber reinforced polypropylene oxide.

Plates

- Transmitter name plate: Stainless steel AISI 316 fastened to the electronics housing.
- Certification plate and optional measuring point tag plate / settings plate: Adhesive, fastened to the electronics housing or stainless steel AISI 316L fastened to the electronics housing with rivets or screws.
- Optional tag plate with customer data: Stainless steel AISI 316L.

The metal plates are laser engraved, the adhesive signs thermo–printed.
For stainless steel housings AISI 316L, the order option I2 or I3 must be selected for plates made from stainless steel AISI 316.

Calibration

Standard: 0 to measuring range upper limit, for ambient temperature and atmospheric pressure
Optional: To specified measuring span

* Wetted parts of the transmitter.
** U-bolt material: Stainless steel AISI 400.
Screw material: high-strength alloy steel or stainless steel AISI 316.

Optional extras

Mounting bracket

For vertical and horizontal 60 mm (2 in) pipes or wall mounting

LCD display

Rotatable in 4 positions in 90° steps

Additional tag plates

Code I2: For measuring point tagging (up to 30 symbols) and calibration specifications (up to 30 symbols: lower and upper value plus unit), fastened to the transmitter housing.
Code I1: For customer data (4 lines at 30 symbols each), wired to the transmitter housing

Overvoltage protection

- Code S2

Cleaning stage for oxygen application (O2)

Code P1

Certificates (inspection, implementation, characteristics, material certificate)

Code Cx and Hx

Name plate and operating instruction language

Code Tx and Mx

Communication plug connector

Code Ux

Valve manifold installation

Code A1: Factory installation and pressure test of the ABB M26 valve manifold.

Process connections

Flanges: 1/4–18 NPT on the process axis
Adapters: 1/2–14 NPT on the process axis
Center distance (266MST):
54 mm (2.13 in) between flanges; 51 mm, 54 mm, or 57 mm (2.01 in, 2.13 in, or 2.24 in) between adapters
Fastening screw threads:
7/16–20 UNF with 41.3 mm center distance;
only for process flange code C:
M10 with operating pressures of up to 16 MPa, 160 bar, 2320 psi or
M12 with higher operating pressures of up to 41 MPa, 410 bar, 6000 psi

Electrical connections

Two 1/2–14 NPT or M20 x 1.5 tap holes for cable glands, directly on the housing.
Special communication connector (on request)

- HART: Straight or angled Harting Han 8D plug with a mating plug.
- FOUNDATION Fieldbus, PROFIBUS PA: plug M12 x 1 or 7/8 in.

Terminals

HART–Version: Three connections for signal / external display, for wire cross–sections up to 2.5 mm2 (14 AWG) and connection points for inspection and communication purposes
Fieldbus versions: Two signal connections (bus connection) for wire cross–sections up to 2.5 mm2 (14 AWG)

Grounding

There are internal and external ground terminals available for 6 mm2 (10 AWG) wire cross–sections.

Mounting position

The transmitters can be installed in any position.
The electronic housing can be rotated into any position.
A stop is provided to prevent overturning.

Weight

(without options)
Approximately 3.7 kg (8.2 lb); add 1.5 kg (3.3 lb) for stainless steel housing.
Add 650 g (1.5 lb) for packaging

Packaging

Carton with dimensions of approx. 28 x 23 x 24 cm (11 x 9 x 9 in)

Specification – configuration

Transmitter with HART communication and 4 to 20 mA

Standard configuration

The transmitters are calibrated in the factory to the measuring range specified by the customer. The calibrated area and the tag number are written on the name plate. If this data was not specified, the transmitter is delivered with unlabeled plate and the following configuration:

Configuration	
Physical unit	kPa
4 mA	Zero
20 mA	Upper measuring range limit (URL)
Output	Linear
Damping	1 s
Operating mode during transmitter malfunction	High alarm
Software tag (max. 8 characters)	Free
Opitional LCD display	PV in kPa; output in mA and in percent as bargraph

Individual or all of the above mentioned configurable parameters, including lower range value and upper range value (in the same unit of measurement), can easily be changed with a portable HART Handheld terminal or with the PC configuration software with the DTM for 266 models.
The specifications for flange type and materials, materials of the O–rings and the vent / drain valves as well as other device options are saved in the transmitter database.

Customer specific configurations (option N6)

The following data can be specified in addition to the standard configuration parameters:

Description:	16 alphanumeric characters
Supplementary information:	32 alphanumeric characters
Date:	Day, month, year

Pa, kPa, MPa
inH2O @ 4 °C, mmH2O @ 4 °C, psi
inH2O @ 20 °C, ftH2O @ 20 °C, mmH2O @ 20 °C
inHg, mmHg, Torr
g/cm2, kg/cm2, atm
mbar, bar
These and others are available for PROFIBUS PA and FOUNDATION Fieldbus.

Transmitter with PROFIBUS PA communication

Standard configuration

The transmitters are calibrated in the factory to the measuring range specified by the customer. The calibrated area and the tag number are written on the name plate. If this data was not specified, the transmitter is delivered with unlabeled plate and the following configuration:

Configuration	
Measuring profile	Designation of gas connections
Physical unit	kPa
Output scaling 0 %	Measuring range lower limit (LRL)
Output scaling 100 %	Upper measuring range limit (URL)
Output	Linear
Upper alarm limit	Upper measuring range limit (URL)
Upper warning limit	Upper measuring range limit (URL)
Lower warning limit	Measuring range lower limit (LRL)
Lower alarm limit	Measuring range lower limit (LRL)
Hysteresis limit value	0.5% of output scaling
PV filter time	0 s
Address (set via local operating buttons)	126
Long Tags	30 alphanumeric characters
Opitional LCD display	PV in kPa; output in percent as bargraph

Individual or all of the above mentioned configurable parameters, including the measuring range values (in the same unit of measurement), can easily be changed with the PC configuration software with the DTM for 266 models.
The specifications for flange type and materials, materials of the O–rings and the vent / drain valves as well as other device options are saved in the transmitter data bank.

Customer specific configurations (option N6)

The following data can be specified in addition to the standard configuration parameters:

Description:	32 alphanumeric characters
Supplementary information:	32 alphanumeric characters
Date:	Day, month, year

Transmitter with FOUNDATION Fieldbus communication

Standard configuration

The transmitters are calibrated in the factory to the measuring range specified by the customer. The calibrated area and the tag number are written on the name plate. If this data was not specified, the transmitter is delivered with unlabeled plate and the analog input function block FB1 is configured as follows:

Configuration	
Measuring profile	Designation of gas connections
Physical unit	kPa
Output scaling 0 %	Measuring range lower limit (LRL)
Output scaling 100 %	Upper measuring range limit (URL)
Output	Linear
Upper alarm limit	Upper measuring range limit (URL)
Upper warning limit	Upper measuring range limit (URL)
Lower warning limit	Measuring range lower limit (LRL)
Lower alarm limit	Measuring range lower limit (LRL)
Hysteresis limit value	0.5% of output scaling
PV filter time	0 s
Long Tags	30 alphanumeric characters
Optional LCD display	PV in kPa; output in percent as bargraph

The analog input function blocks FB2 and FB3 are each configured for the sensor temperature measured in °C and the static pressure measured in MPa. Individual or all of the above mentioned configurable parameters, including the measuring range values, can be changed with every FOUNDATION Fieldbus compatible configurator.
The specifications for flange type and materials, materials of the O–rings and the vent / drain valves as well as other device options are saved in the transmitter data bank.

Customer specific configurations (option N6)

The following data can be specified in addition to the standard configuration parameters:

Description:	32 alphanumeric characters
Supplementary information:	32 alphanumeric characters
Date:	Day, month, year

Dimensions

(not design data) – dimensions in mm (inch)

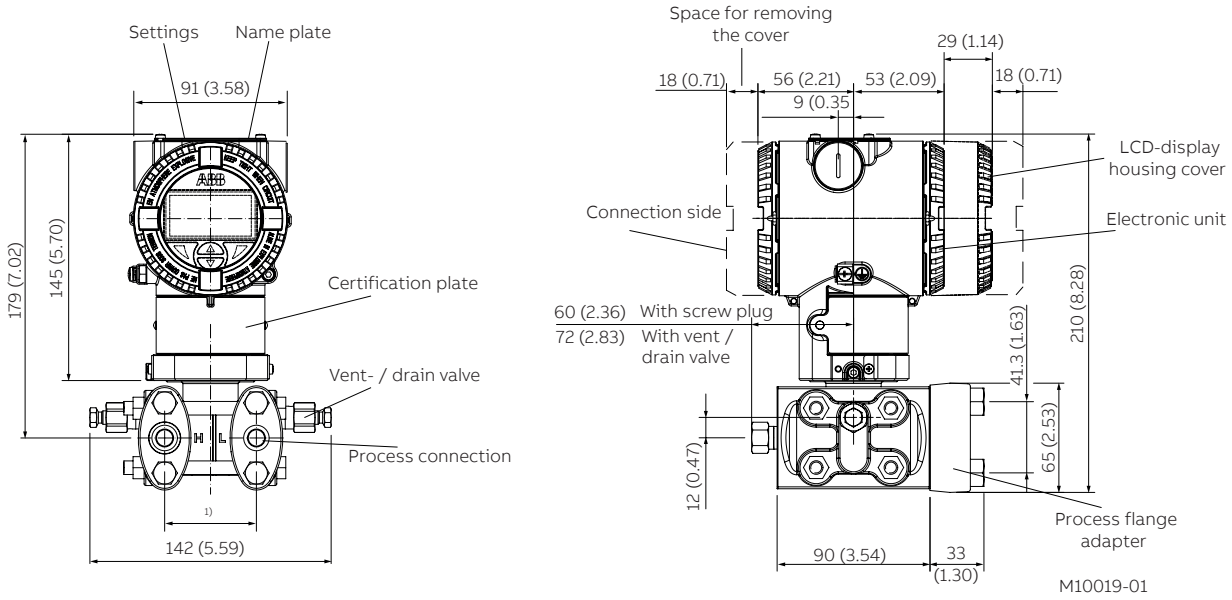

Figure 2: Transmitter with barrel housing - horizontal flanges

(*) 54 (2.13) mm (inch) over 1/4 – 18 NPT process flange

51 (2.01), 54 (2.13) or 57 (2.24) mm (inch) over 1/2 – 14 NPT adapter flange;

Note: process connection and gasket groove comply with IEC 61518 screw threads for adapter flange or other components (e.g. valve manifold etc.) on the process flange 7/16 – 20 UNF

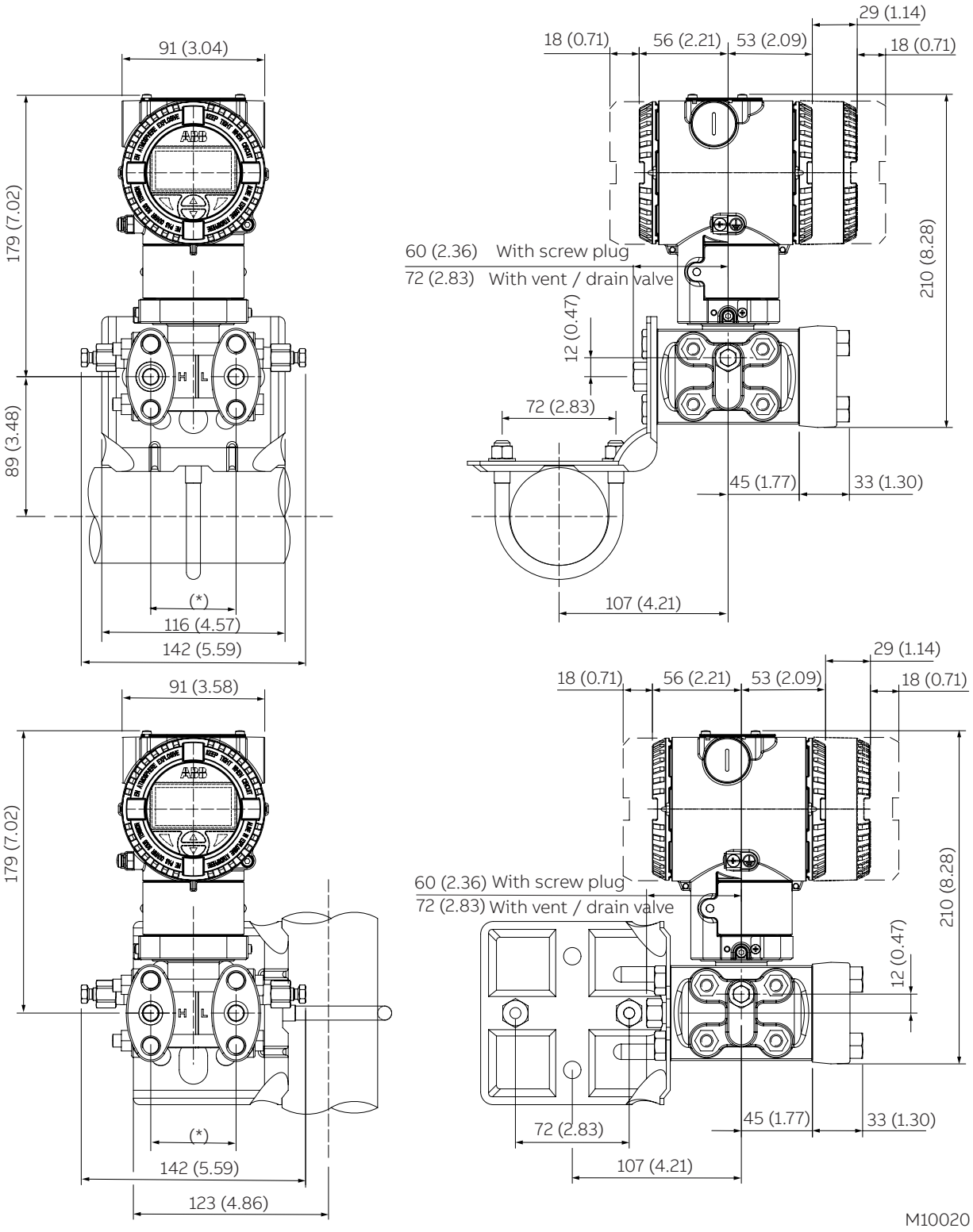

Figure 3: Transmitter with mounting bracket, for vertical or horizontal mounting on 60 mm (2 in) pipe

(*) 54 (2.13) mm (in) via 1/4 – 18 NPT process flanges

51 (2.01), 54 (2.13), or 57 (2.24) mm (in) via 1/2 –-14 NPT adapter flanges.

Note: Process connection and gasket groove comply with IEC 61518. Thread for attaching adapter flanges or other components (e.g., manifold) to process flange: 7/16 – 20 UNF.

...Dimensions

...(not design data) – dimensions in mm (inch)

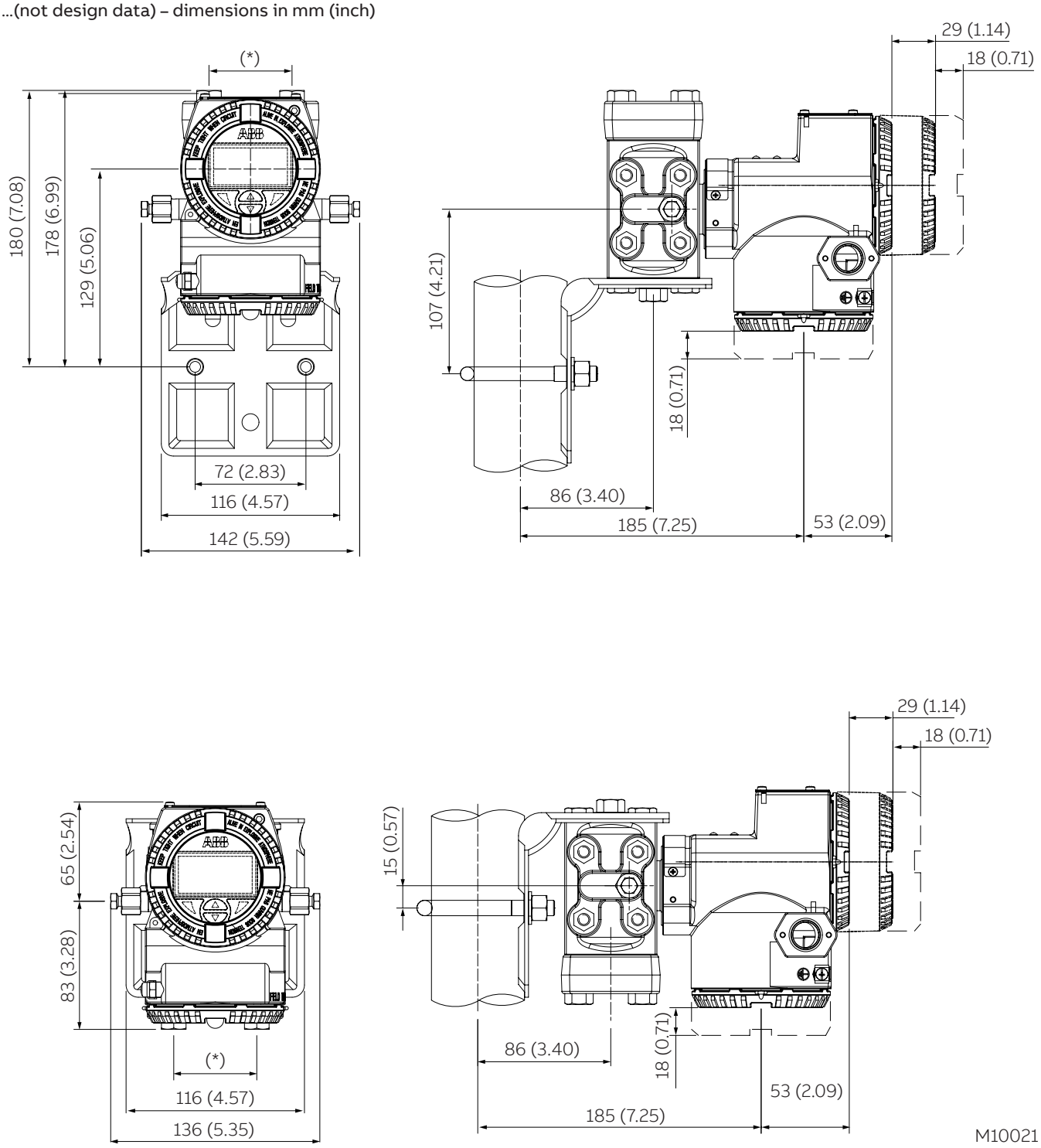

Figure 4: Transmitter with DIN aluminum housing - horizontal flanges with mounting bracket for vertical or horizontal mounting on 60 mm (2 in) pipe

(*)54 (2.13) mm (in) via 1/4 – 18 NPT process flanges

51 (2.01), 54 (2.13), or 57 (2.24) mm (in) via 1/2 – 14 NPT adapter flanges.

Note: Process connection and gasket groove comply with IEC 61518. Thread for attaching adapter flanges or other components (e.g., manifold) to process flange: 7/16 – 20 UNF.

Optional plug connectors

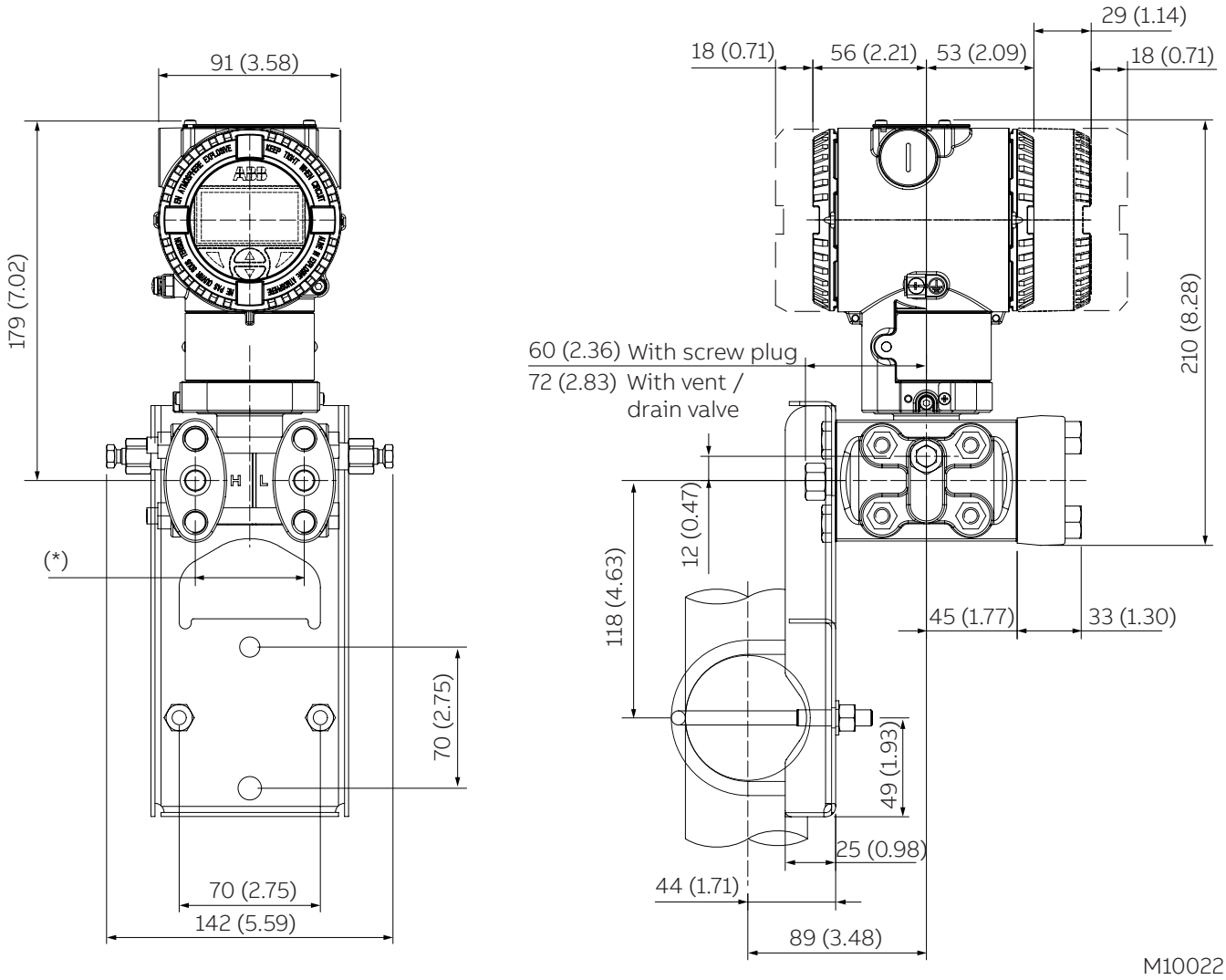

Figure 5: Transmitter with flat bracket, for vertical or horizontal mounting on 60 mm (2 in) pipe

Electrical connections

HART version

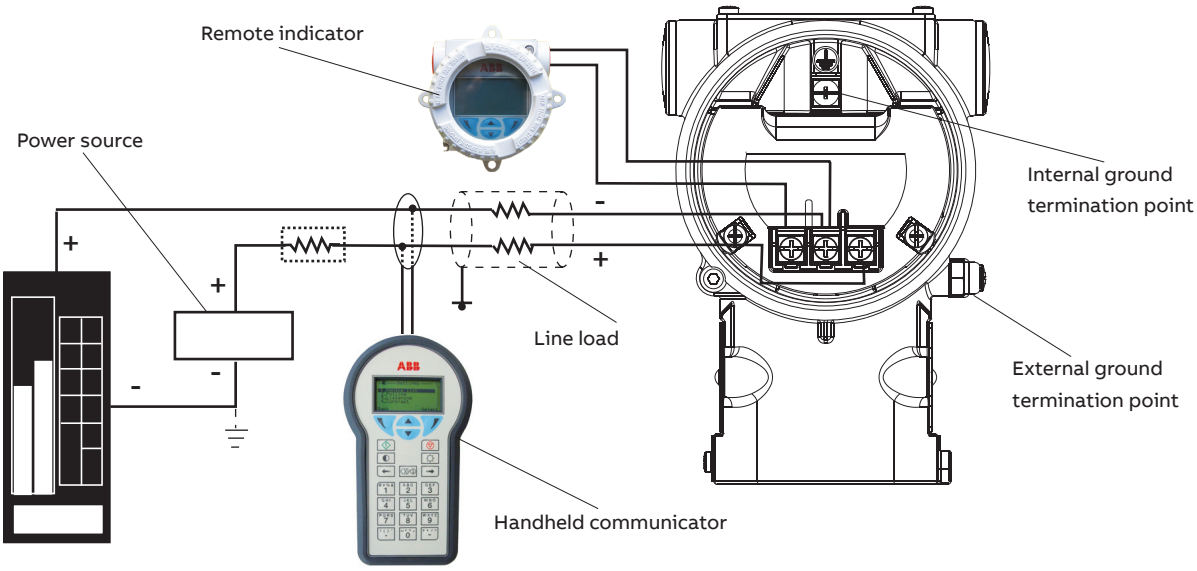

Figure 6: Electrical connection – HART Version

The HART handheld terminal can be connected to any wiring termination point in the loop as long as a minimum resistance of 250 Ω is present between handheld terminal and transmitter power supply. If it is less than 250 Ω, additional resistance wires must be installed to enable a communication.

Fieldbus version

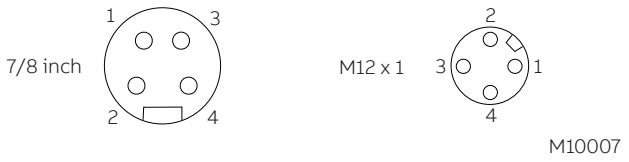

Figure 7: Plug connectors – fieldbus versions

Pin assignment (plug)		
Pin number	FOUNDATION Fieldbus	PROFIBUS PA
1	DATA –	DATA +
2	DATA +	GROUND
3	SHIELD	DATA –
4	GROUND	SHIELD

Delivery scope: plug connector without mating plug (female connector) supplied loose.

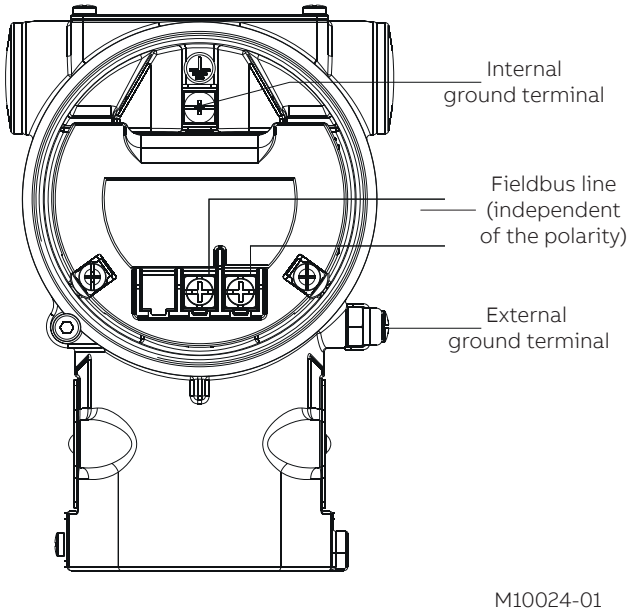

Figure 8: Standard terminal block

...Electrical connections

HART version

Barrel-housing

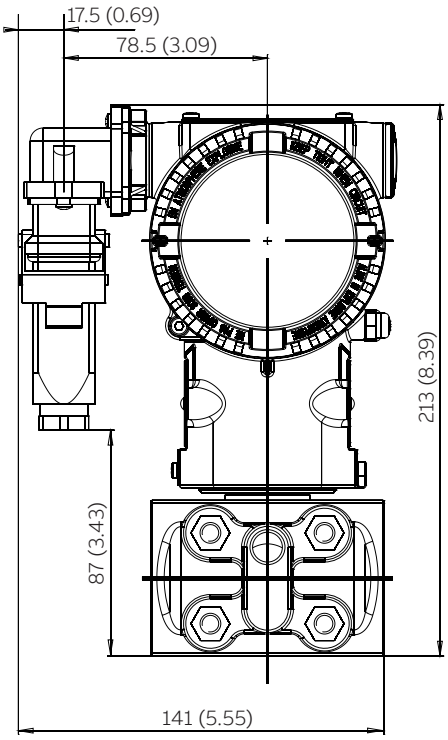

DIN housing

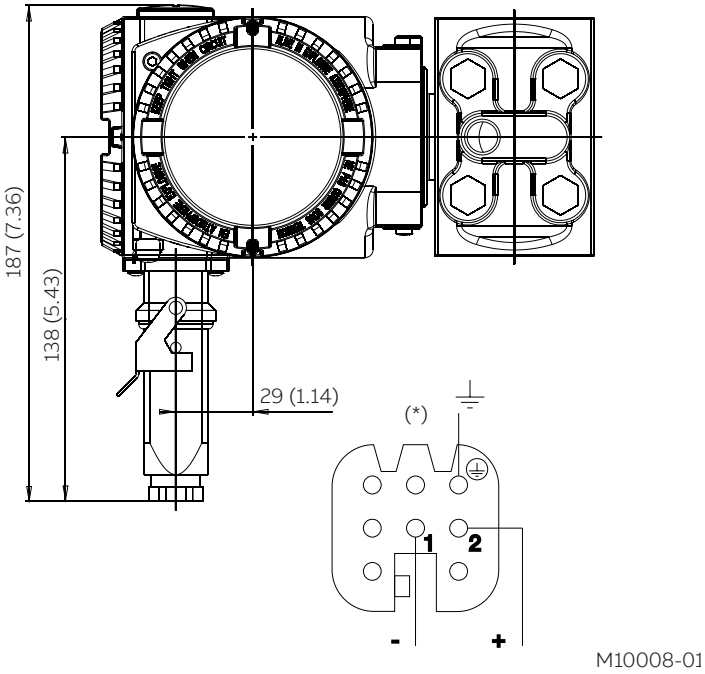

Figure 9: Harting Han connection – HART version

Ordering Information

Basic ordering information model 266MST Differential Pressure Transmitter

Select one character or set of characters from each category and specify complete catalog number.
Refer to additional ordering information and specify one or more codes for each transmitter if additional options are required.

Base model - 1st to 6th characters **Differential pressure transmitter, base accuracy 0.04 %**		**266MST**	**X**	**X**	**X**	**X**	**X**	**X**	**X**
Sensor Span Limits – 7th character									
0.05 and 1 kPa (0.5 and 10 mbar, 0.2 and 4 inH2O), "Vx" option is required	(Notes: 1, 2)		A				continued see next page		
0.2 and 6 kPa (2 and 60 mbar, 0.8 and 24 inH2O)			C						
0.4 and 40 kPa (4 and 400 mbar, 1.6 and 160 inH2O)			F						
2.5 and 250 kPa (25 and 2500 mbar, 10 and 1000 inH2O)			L						
20 and 2000 kPa (0.2 and 20 bar, 2.9 and 290 psi)			N						
100 and 10000 kPa (1 and 100 bar, 14.5 and 1450 psi)			R						
Maximum Working Pressure – 8th character									
1 MPa / 10 bar / 145 psi (Only available with Process Flanges code P)				Y					
2 MPa / 20 bar / 290 psi (Only available with Sensor Span Limits code A)				W					
16 MPa / 160 bar / 2320 psi (Not available with Sensor Span Limits code A)				C					
25 MPa / 250 bar / 3625 psi (Not available with Sensor Span Limits code A)				Z					
41 MPa / 410 bar / 5945 psi (Not available with Sensor Span Limits code A)				T					
60 MPa / 600 bar / 8700 psi (Not available with Sensor Span Limits code A, only with process connection code A)				A					
Diaphragm Material / Fill Fluid – 9th character									
AISI 316L SST (1.4435) / Silicone oil (NACE)					S				
Hastelloy® C-276 / Silicone oil (NACE)					K				
Monel 400 / Silicone oil (NACE)					M				
Monel 400 gold–plated / Silicone oil (NACE)					V				
Tantalum / Silicone oil (NACE)					T				
AISI 316L SST (1.4435) / Inert fluid – Galden (Suitable for oxygen applications) (NACE)					A				
Hastelloy® C-276 / Inert fluid – Galden (Suitable for oxygen applications) (NACE)					F				
Monel 400 / Inert fluid – Galden (Suitable for oxygen applications) (NACE)					C				
Monel 400 gold–plated / Inert fluid – Galden (Suitable for oxygen applications) (NACE)					Y				
Tantalum / Inert fluid – Galden (Suitable for oxygen applications) (NACE)					D				
Process Flanges and Adapters Material / Connection – 10th character									
AISI 316L SST (1.4404 / 1.4408) / 1/4 in –18 NPT female direct (horizontal connection) (NACE)						A			
AISI 316L SST (1.4404 / 1.4408) / 1/2 in –14 NPT female through adapter (horizontal connection) (NACE)						B			
AISI 316L SST (1.4404 / 1.4408) / 1/4 in –18 NPT female direct (DIN 19213) (horizontal connection) (NACE)						C			
Hastelloy® C-276 / 1/4 in –18 NPT female direct (horizontal connection) (NACE)						D			
Hastelloy® C-276 / 1/2 in –14 NPT female through adapter (horizontal connection) (NACE)						E			
Monel 400 / 1/4 in –18 NPT female direct (horizontal connection) (NACE)						G			
Monel 400 / 1/2 in –14 NPT female through adapter (horizontal connection) (NACE)						H			
Kynar (PVDF) / 1/4 in –18 NPT female direct (MWP = 1 MPa) (insert on side of flange)						P			
AISI 316L SST (1.4404 / 1.4408) / 1/4 in –18 NPT female direct (vertical connection) (NACE)						Q			

...Ordering information

...Basic ordering information model 266MST Differential Pressure Transmitter

		X	X	X
Bolts Material / Gaskets Material – 11th character				
AISI 316 SST (NACE – not exposed to H2S) / Viton (Suitable for oxygen applications) (Max. 41 MPa / 410 bar / 5945 psi)		3		
AISI 316 SST (NACE – not exposed to H2S) / PTFE (Max. 25 MPa / 250 bar / 3625 psi)		4		
AISI 316 SST (NACE – not exposed to H2S) / EPDM (Max. 41 MPa / 410 bar / 5945 psi)		5		
AISI 316 SST (NACE – not exposed to H2S) / Perbunan		6		
AISI 316 SST (NACE – not exposed to H2S) / Graphite (Max. 41 MPa / 410 bar / 5945 psi)		7		
AISI 316 SST / FEP (Only available with Kynar [PVDF] process connection)		T		
Housing Material / Electrical Connection – 12th character				
Aluminum alloy (Barrel type) / 1/2–14 NPT			A	
Aluminum alloy (Barrel type) / M20 x 1.5			B	
Aluminum alloy (Barrel type) / Harting Han connector (General purpose only)	(Note: 2)		E	
Aluminum alloy (Barrel type) / Fieldbus connector (General purpose only)	(Note:2)		G	
AISI 316L SST (Barrel type) / 1/2–14 NPT (I2 or I3 required)			S	
AISI 316L SST (Barrel type) / M20 x 1.5 (I2 or I3 required)			T	
Aluminum alloy (DIN type) / M20 x 1.5			J	
Aluminum alloy (DIN type) / Harting Han connector (General purpose only)	(Note: 2)		K	
Aluminum alloy (DIN type) / Fieldbus connector (General purpose only)	(Note: 2)		W	
AISI 316L SST (Barrel type) / Fieldbus connector (General purpose only)	(Note: 2)		Z	
Output – 13th character				
HART digital communication and 4 to 20 mA				1
PROFIBUS PA				2
FOUNDATION Fieldbus				3
HART digital communication and 4 to 20 mA, SIL2 and SIL3 certified to IEC 61508				8

Additional ordering information model 266MST Differential Pressure Transmitter

		XX	XX	XX
Accuracy				
Base accuracy 0.025 %	(Note: 3)	D1		
Vent and Drain Valve Material / Position				
AISI 316L SST (1.4404) / On process axis (NACE)			V1	
AISI 316L SST (1.4404) / On flanges side top (NACE)			V2	
AISI 316L SST (1.4404) / On flanges side bottom (NACE)			V3	
Hastelloy® C-276 / On process axis (NACE)			V4	
Hastelloy® C-276 / On flanges side top (NACE)			V5	
Hastelloy® C-276 / On flanges side bottom (NACE)			V6	
Monel 400 / On process axis (NACE)			V7	
Monel 400 / On flanges side top (NACE)			V8	
Monel 400 / On flanges side bottom (NACE)			V9	
Explosion Protection Certification				
ATEX Intrinsic Safety Ex ia				E1
ATEX Explosion Proof Ex db_tb				E2
ATEX Intrinsic Safety Ex ic_tc				E3
FM approval (Canada) approval (XP, DIP, IS, NI)				E4
FM approval (USA) approval (XP, DIP, IS, NI)				E6
FM approvals (USA and Canada) Intrinsically safe				EA
FM approvals (USA and Canada) Explosionproof				EB
FM approvals (USA and Canada) Nonincendive				EC
Combined ATEX, IECEx and FM Approvals (USA and Canada)				EN
Combined ATEX Ex ia, Ex db_tc and Ex ic_tc				EW
IECEx Intrinsic Safety Ex ia				E8
IECEx Explosion Proof Ex db_tb				E9
IECEx Intrinsic Safety Ex ic_tc				ER
Combined IEC Approval Ex ia and Ex db_tb				EH
Combined IEC Approval Ex ia, Ex db_tb and Ex ic_tc				EI
NEPSI Intrinsic Safety Ex ia_iaD				EY
NEPSI Explosion Proof Ex d_tD				EZ
NEPSI Intrinsic Safety Ex ic _nA_tD				ES
Combined NEPSI Ex ia_iaD and Ex d_tD				EP
Combined NEPSI Ex ia_iaD, Ex d_tD and Ex ic_nA_tD				EQ

...Ordering information

...Additional ordering information for model 266MST Differential Pressure Transmitter

	XX	XX	XX	XX	XX	XX
Other Explosion Protection Certifications						
For TR CU EAC Ex ia for Russia (incl. GOST Metrologic Approval)	W1					
For TR CU EAC Ex d for Russia (incl. GOST Metrologic Approval)	W2					
For TR CU EAC Ex ia for Kazakhstan (incl. GOST Metrologic Approval)	W3					
For TR CU EAC Ex d for Kazakhstan (incl. GOST Metrologic Approval)	W4					
For TR CU EAC Ex ia for Belarus (incl. GOST Metrologic Approval)	WF					
For TR CU EAC Ex d for Belarus (incl. GOST Metrologic Approval)	WG					
Integral LCD						
With integral LCD display		L1				
TTG (Through The Glass) integral digital LCD display		L5				
Mounting Bracket Shape / Material						
For pipe mounting / Carbon steel (Not suitable for AISI housing)			B1			
For pipe mounting / AISI 316 SST (1.4401) (Not suitable for AISI housing)			B2			
Flat type bracket / AISI 316 SST (1.4401) (Suitable for AISI housing)			B5			
Surge / Transient Protector						
With integral surge / transient protector				S2		
Operating Instruction Language						
German					M1	
Italian					M2	
Spanish					M3	
French					M4	
English					M5	
Portuguese					MA	
Russian					MB	
Label and Tag Language						
German						T1
Italian						T2
Spanish						T3
French						T4

		XX	XX	XX	XX	XX
Additional tag plate						
Supplemental wired–on stainless steel plate		I1				
Tag and certification stainless steel plates and laser printing		I2				
Tag, certification and supplemental wired–on stainless steel plates and laser printing		I3				
Configuration (units visible on type label)						
Standard pressure = inH2O / psi at 68 °F			N2			
Standard pressure = inH2O / psi at 39.2 °F			N3			
Standard pressure = inH2O / psi at 20 °C			N4			
Standard pressure = inH2O / psi at 4 °C			N5			
Custom			N6			
Configured for HART revision 5	(Note: 4)		NH			
Preparation Procedure						
Oxygen service cleaning, Pmax = 12 MPa (120 bar, 1740 psi) or maximum working pressure (lower value), Tmax = 60 °C / 140 °F (Only available with inert fill / viton gasket)				P1		
Certificates						
Inspection certificate 3.1 acc. EN 10204 of calibration					C1	
Inspection certificate 3.1 acc. EN 10204 of cleanliness stage					C3	
Inspection certificate 3.1 acc. EN 10204 of helium leakage test of the sensor module					C4	
Inspection certificate 3.1 acc. EN 10204 of pressure test					C5	
Declaration of compliance with the order 2.1 acc. EN 10204 for instrument design					C6	
PMI test on wetted parts					CT	
Approvals						
Metrologic Pattern for Russia (NOT APPLICABLE WITH ANY HAZARDOUS AREA CERTIFICATION)						Y1
Metrologic Pattern for Kazakhstan (NOT APPLICABLE WITH ANY HAZARDOUS AREA CERTIFICATION)						Y2
Metrologic Pattern for Ukraine (NOT APPLICABLE WITH ANY HAZARDOUS AREA CERTIFICATION)						Y3
Metrologic Pattern for Belarus (NOT APPLICABLE WITH ANY HAZARDOUS AREA CERTIFICATION)						Y4
DNV GL approval						YA
Conformity to NAMUR NE 021 (2004)						YE

...Ordering information

...Additional ordering information for model 266MST Differential Pressure Transmitter

		XX	XX	XX
Material Traceability				
Inspection certificate 3.1 acc. EN 10204 of process wetted parts with analysis certificates as material verification	(Note: 5)	H3		
Material certificate 2.2 acc. EN 10204 for the pressure bearing and process wetted parts		H4		
Plug connector				
Fieldbus 7/8 in (Recommended for FOUNDATION Fieldbus, supplied loose, without female plug)			U1	
Fieldbus M12 x 1 (Recommended for PROFIBUS PA, supplied loose, without female plug)			U2	
Harting Han 8D (8U), straight entry (supplied loose)			U3	
Harting Han 8D (8U), angle entry (supplied loose)			U4	
Harting Han 7D (supplied loose)			U5	
With cable gland M20 x 1.5 (Plastic, black, supplied loose)			U8	
Housing Accessories				
FM26–manifold mounting, top mounted (with DIN–housings) incl. pressure test and inspection certificate 3.1				A1

Note 1: Not available with Diaphragm Material code M, V, T, C, Y, D
Note 2: Select connector with additional ordering code
Note 3: Only available with Sensor Span Limits code F, L, N
Note 4: Not available with output code 2, 3
Note 5: Minor parts with factory certificate acc. EN 10204

Standard delivery scope (changes possible with additional ordering code)

- Adapters supplied loose
- Sealing plugs for horizontal connection flanges on the process axis; not for PVDF Kynar insert or for vertical connection flanges (no vent / drain valves)
- For standard applications (without explosion protection)
- No display, no mounting bracket, no surge protection
- Multilanguage short–form operating instruction and English labeling
- Configuration with kPa and °C units
- No test, inspection, or material certificates

Important notice

If nothing else was determined before the manufacturing, then the customer is responsible for ensuring the compatibility of the materials of the wetted part and the filling fluid with the measuring medium by suited selection.

Coordination with NACE directives

- The labeled materials comply with the directive NACE MR0175/ISO 15156 for the application in sulfurous environments during the oil and gas production. As different application boundaries apply for different materials, please observe the version of the directive that is current. The materials AISI 316 / AISI 316L, Hastelloy C 276, Monel 400 also comply with the directive NACE MR0103 for the application in sulfurous environments in oil and gas processing.
- According to NACE MR0175, materials for pressurized screws are differentiated by application:
  - in contact with sulfurous environments: screws, that can come in direct contact with sulfurous environments, e.g. by underfloor installation or installation in dense protective enclosures
  - not in contact with sulfurous environments: screws, which are only in contact with standard, non–sulfurous environments

The cap screw of the pressure transmitter 266MST, comply with the requirements according to NACE MR0175 for screws that are not in contact with sulfurous environments.

Trademarks

® Buna-N is a registered trademark of DuPont Dow Elastomers.
® FOUNDATION Fieldbus is a registered trademark of FieldComm Group, Austin, Texas, USA
® HART is a registered trademark of FieldComm Group, Austin, Texas, USA
® Hastelloy is a registered trademark of Haynes International, Inc.
® PROFIBUS and PROFIBUS PA are registered trademarks of PROFIBUS & PROFINET International (PI)
® Monel is a registered trademark of Special Metals Corporation
™ FieldComm Group is a trademark of FieldComm Group, Austin, Texas, USA
™ Galden is a Montefluos trademark
™ Kynar is an Elf Atochem North America Inc. trademark
™ Viton is a DuPont de Nemours trademark

Notes

Castel Maggiore (BO) 40013
Via Lirone 60/i

e-mail: info@eurotecsrl.com
Tel: +39 051/6321595
Website: www.eurotecsrl.com

C.F.: 04103780377
P.I.: 01596581205

—

ABB Ltd.
Measurement and Analytics
Howard Road St. Neots
Cambridgeshire PE19 8EU
UK
Tel: +44 (0)870 600 6122
Fax: +44 (0)1480 213 339
Email: enquiries.mp.uk@gb.abb.com

ABB S.p.A.
Measurement and Analytics
Via Luigi Vaccani 4
22016 Tremezzina (CO)
Italy
Tel: +39 0344 58111

ABB Inc.
Measurement and Analytics
125 E. County Line Road
Warminster PA 18974
USA
Tel: +1 215 674 6000
Fax: +1 215 674 7183

abb.com/measurement

We reserve the right to make technical changes or modify the contents of this document without prior notice. With regard to purchase orders, the agreed particulars shall prevail.
ABB does not accept any responsibility whatsoever for potential errors or possible lack of information in this document.

We reserve all rights in this document and in the subject matter and illustrations contained therein.
Any reproduction, disclosure to third parties or utilization of its contents – in whole or in parts – is forbidden without prior written consent of ABB.

© Copyright 2020 ABB
All rights reserved

3KXP300004R1001

DS/266MST-EN Rev. H 01.2020