ABB MEASUREMENT & ANALYTICS | DATA SHEET

266HSH and 266NSH

Gauge and absolute pressure transmitters

Measurement made easy
Engineered solutions for all applications

Base accuracy
- from 0.06 % of calibrated span (optional 0.04 %)

Reliable sensing system coupled with very latest digital technologies
- provides large turn down ratio up to 100:1

Comprehensive sensor choice
- optimize in-use total performance and stability

10–year stability
- 0.15 % of URL

Flexible configuration facilities
- provided locally via local LCD keypad

New TTG (Through-The-Glass) keypad technology
- allows quick and easy local configuration without opening the cover, even in explosion proof environments

IEC 61508 certification
- version for SIL2 (1oo1) and SIL3 (1oo2) applications

PED compliance
- Category III for PS > 20 MPa, 200 bar
- Sound Engineering Practice (SEP) for PS ≤ 20 MPa, 200 bar

WirelessHART version
- the battery powered solution compliant to IEC 62591

Best-in-class battery life
- up to 10 years @ 32 s update time
- in-field replaceable

Product in compliance with Directive 2011/65/UE (RoHS II)

In-built advanced diagnostics

Specification – functional

Range and span limits

Sensor code	Upper Range Limit (URL)	Lower Range Limit (LRL) 266HSH *	Minimum span 266HSH	Minimum span 266NSH
	16 kPa	–16 kPa	0.54 kPa	
E	160 mbar	–160 mbar	5.4 mbar	
	64 inH2O	–64 inH2O	2.16 inH2O	
	40 kPa	–40 kPa	0.4 kPa	0.67 kPa
F	400 mbar	–400 mbar	4 mbar	6.7 mbar
	160 inH2O	–160 inH2O	1.6 inH2O	5 mmHg
	160 kPa	–100 kPa	1.6 kPa	2.67 kPa
H	1600 mbar	–1 bar	16 mbar	26.7 mbar
	642 inH2O	–14.5 psi	6.4 inH2O	20 mmHg
	600 kPa	–100 kPa	6 kPa	10 kPa
M	6 bar	–1 bar	0.06 bar	0.1 bar
	87 psi	–14.5 psi	0.87 psi	1.45 psi
	2400 kPa	–100 kPa	24 kPa	40 kPa
P	24 bar	–1 bar	0.24 bar	0.4 bar
	348 psi	–14.5 psi	3.5 psi	5.8 psi
	8000 kPa	–100 kPa	80 kPa	134 kPa
Q	80 bar	–1 bar	0.8 bar	1.34 bar
	1160 psi	–14.5 psi	11.6 psi	19.4 psi
	16000 kPa	–100 kPa	160 kPa	267 kPa
S	160 bar	–1 bar	1.6 bar	2.67 bar
	2320 psi	–14.5 psi	23.2 psi	38.7 psi
	70000 kPa	–100 kPa	1400 kPa	
W	700 bar	–1 bar	14 bar	
	10150 psi	–14.5 psi	203 psi	
	105000 kPa	–100 kPa	10500 kPa	
Z	1050 bar	–1 bar	105 bar	
	15225 psi	–14.5 psi	1522 psi	

* Lower Range Limit (LRL) for 266NSH is 0 abs. for all ranges.

Span limits

Maximum span = URL

IT IS RECOMMENDED TO SELECT THE TRANSMITTER SENSOR CODE PROVIDING THE TURNDOWN VALUE AS LOWEST AS POSSIBLE TO OPTIMIZE PERFORMANCE CHARACTERISTICS.

Zero suppression and elevation

Zero and span can be adjusted to any value within the range limits detailed in the table as long as:

– calibrated span ≥ minimum span

Damping (feature not available for WirelessHART version)

Selectable time constant : between 0 and 60 s

This is in addition to sensor response time.

Turn on time

Operation within specification in less than 10 s with minimum damping.

Insulation resistance

> 100 MΩ at 500 V DC (terminals to earth)

Insulation resistance

> 100 MΩ at 500 V DC (terminals to earth)–

Specification – operative limits

Pressure limits

Overpressure limits

Without damage to the transmitter

Sensors	Fill fluid	Overpressure limits
Sensor E to M	Silicone oil	0.07 kPa abs, 0.7 mbar abs, 0.5 mmHg and 14 MPa, 140 bar, 2030 psi
Sensor P to S	Silicone oil	0.07 kPa abs, 0.7 mbar abs, 0.5 mmHg and 21 MPa, 210 bar, 3045 psi
Sensor W	Silicone oil	0.07 kPa abs, 0.7 mbar abs, 0.5 mmHg and 105 MPa, 1050 bar, 15225 psi
Sensor E to M	Inert (Galden)	0.135 kPa abs, 1.35 mbar abs, 1 mmHg and 14 MPa, 140 bar, 2030 psi
Sensor P to S	Inert (Galden)	0.135 kPa abs, 1.35 mbar abs, 1 mmHg and 21 MPa, 210 bar, 3045 psi

Sensors	Connection	Overpressure limits
Sensor Z	F250C	0.07 kPa abs, 0.7 mbar abs, 0.5 mmHg and 157.5 MPa, 1575 bar, 22837 psi
Sensor Z	¼ – 18 NPT	0.07 kPa abs, 0.7 mbar abs, 0.5 mmHg and 135 MPa, 1350 bar, 19570 psi

Proof pressure

The transmitter can be exposed without leaking to line pressure of up to the following values:

Sensors	Proof pressure
Sensor E, F, H, M	28 MPa, 280 bar, 4060 psi
Sensor P, Q, S	40.25 MPa, 402.5 bar, 5836 psi
Sensor W	171.50 MPa, 1715 bar, 24868 psi
Sensor Z ¼ – 18 NPT connection	210.5 MPa, 2105 bar, 30522 psi
Sensor Z F250C connection	239,7 MPa, 2397 bar, 34763 psi

Meet ANSI/ISA–S 82.03 hydrostatic test requirements.

Temperature limits °C (°F)

Ambient

is the operating temperature

Models 266HSH – 266NSH	Ambient temperature limits
Silicone oil for sensor E to W	–40 and 85 °C (–40 and 185 °F)
Inert (Galden) for sensor E to S	–20 and 85 °C (–4 and 185 °F)
Sensor Z without filling	–40 and 85 °C (–40 and 185 °F)

Models 266HSH – 266NSH	Ambient temperature limits
LCD integral display	–40 and 85 °C (–40 and 185 °F)

LCD display may not be clearly readable below –20 °C (–4 °F) or above +70 °C (+158 °F)

Models 266HSH – 266NSH	Ambient temperature limit
Painted AISI 316 L ss housing	max 70 °C (158 °F) countinuous

IMPORTANT

For Hazardous Atmosphere applications see the temperature range specified on the certificate/approval relevant to the aimed type of protection.

Process

Models 266HSH – 266NSH	Process temperature limits
Silicone oil for sensor E to W	–40 and 121 °C (–40 and 250 °F) *
Inert (Galden) for sensor E to S	–20 and 100 °C (–4 and 212 °F) **
Sensor Z without filling	–40 and 121 °C (–40 and 250 °F)

* 100 °C (212 °F) for application below atmospheric pressure
** 65 °C (150 °F) for application below atmospheric pressure

Storage

Models 266HSH – 266NSH	Storage temperature limits
Storage limits	–50 and 85 °C (–58 and 185 °F)
LCD integral display	–40 and 85 °C (–40 and 185 °F)

Environmental limits

Electromagnetic compatibility (EMC)

Comply with 2014/30/UE to standards EN 61326-1:2013.
For IEC 61508 SIL certified transmitter to EN 61326-3-1:2008.
For transmitter with option “YE” to NAMUR NE 021 (2004).
Surge immunity level (with surge protector): 4 kV
(according to IEC 61000-4–5 EN 61000–4–5)

Pressure equipment directive (PED)

Comply with 2014/68/UE to standards ANSI/ISA 61010-1:2012

- Category III Module H for PS ≥ than 20 MPa, 200 bar
- Sound Engineering Practice (SEP) for PS < 20 MPa, 200 bar

Humidity

Relative humidity: up to 100 %
Condensing, icing: admissible

Vibration resistance

Accelerations up to 2 g at frequency up to 1000 Hz
(according to IEC 60068–2–6)

Shock resistance

Acceleration: 50 g
Duration: 11 ms
(according to IEC 60068–2–27)

Wet and dust-laden atmospheres

The transmitter is dust and sand tight and protected against immersion effects as defined by IEC 60529 (2001) to IP 67 (IP 68 on request) or by NEMA Type 4X.
IP65 with Harting Han connector.
Aluminium and AISI housings as barrel version also comply to IP 66 as defined by IEC 60529 (2001).
IP66W/IP67W/IP68W as standard for Inmetro certification.

...Specification – operative limits

Hazardous atmospheres

(FOR ALL VERSIONS EXCEPT WirelessHART)

With or without integral display

INTRINSIC SAFETY Ex ia:

- ATEX Europe (code E1) approval
  II 1 G Ex ia IIC T6...T4 Ga, II 1/2 G Ex ia IIC T6...T4 Ga/Gb, II 1 D Ex ia IIIC T85 °C Da, II 1/2 D Ex ia IIIC T85 °C Da; IP66, IP67.
- IECEx (code E8) approval
  Ex ia IIC T6...T4 Ga/Gb, Ex ia IIIC T85 °C Da; IP66, IP67.
- NEPSI China (code EY)
  Ex ia IIC T4/T5/T6 Ga, Ex ia IIC T4/T5/T6 Ga/Gb, Ex iaD 20 T85/T100/T135, Ex iaD 20/21 T85/T100/T135.

EXPLOSION PROOF:

- ATEX Europe (code E2) approval
  II 1/2 G Ex db IIC T6 Ga/Gb Ta=–50 °C to +75 °C, II 1/2 D Ex tb IIIC T85 °C Db Ta = –50 °C to +75 °C; IP66, IP67.
- IECEx (code E9) approval
  Ex db IIC T6 Ga/Gb Ta=–50 °C to +75 °C, Ex tb IIIC T85 °C Db Ta = –50 °C to +75 °C; IP66, IP67.
- NEPSI China (code EZ)
  Ex d IIC T6 Gb, Ex tD A21 IP67 T85 °C.

INTRINSIC SAFETY Ex ic:

- ATEX Europe (code E3) type examination
  II 3 G Ex ic IIC T6...T4 Gc, II 3 D Ex tc IIIC T85 °C Dc; IP66, IP67.
- IECEx (code ER) type examination
  Ex ic IIC T6...T4 Gc, Ex tc IIIC T85 °C Dc; IP66, IP67.
- NEPSI China (code ES) type examination
  Ex ic IIC T4~T6 Gc, Ex nA IIC T4~T6 Gc, Ex tD A22 IP67 T85 °C.

FM Approvals US (code E6) and FM Approvals Canada (code E4):

- Explosionproof (US): Class I, Division 1, Groups A, B, C, D; T5
- Explosionproof (Canada): Class I, Division 1, Groups B, C, D; T5
- Dust-ignitionproof: Class II, Division 1, Groups E, F, G; Class III, Div. 1; T5
- Flameproof (US): Class I, Zone 1 AEx d IIC T4 Gb
- Flameproof (Canada): Class I, Zone 1 Ex d IIC T4 Gb
- Nonincendive: Class I, Division 2, Groups A, B, C, D T6...T4
- Energy limited (US): Class I, Zone 2 AEx nC IIC T6...T4
- Energy limited (Canada): Class I, Zone 2 Ex nC IIC T6...T4
- Intrinsically safe: Class I, II, III, Division 1, Groups A, B, C, D, E, F, G T6...T4
  Class I, Zone 0 AEx ia IIC T6...T4 (US)
  Class I, Zone 0 Ex ia IIC T6...T4 (Canada)

Type 4X, IP66, IP67 for all above markings.

COMBINED FM Approvals US and Canada

- Intrinsically safe (code EA)

COMBINED ATEX, FM and IECEx Approvals (code EN)

Technical Regulations Customs Union EAC (Russia, Kazakhstan, Belarus), Inmetro (Brazil), Kosha (Korea)

(ONLY FOR WirelessHART VERSION)

With or without integral display

INTRINSIC SAFETY Ex ia:

- ATEX Europe (code E1) approval
  II 1 G Ex ia IIC T4 and II 1/2 G Ex ia IIC T4, IP67.
- IECEx (code E8) approval
  Ex ia IIC T4

FM Approvals US and FM Approvals Canada:

- Intrinsically safe: Class I, Division 1, Groups A, B, C, D; T4
  Class I, Zone 0 AEx ia IIC T4 Gb (US)
  Class I, Zone 0 Ex ia IIC T4 Gb (Canada)

IP67 for all above markings.

IMPORTANT

REFER TO CERTIFICATES FOR AMBIENT TEMPERATURE RANGES RELATED TO THE DIFFERENT TEMPERATURE CLASSES.

SENSORS W AND Z ARE NOT IN COMPLIANCE WITH ISA 12.27.01 FOR SEALING REQUIREMENTS, SPECIFICALLY FOR FM APPROVAL (Canada).

Specification – electrical characteristics and options

Optional indicators

Integrated digital display
(code LS; only with HART standard functionality)

Wide screen LCD, 128 x 64 pixel,
52.5 x 27.2 mm (2.06 x 1.07 in.) dot matrix.
Two keys for zero/span or without keypad.
User selectable application-specific visualizations.
Display may also indicate static pressure, sensor temperature and diagnostic messages.

Integral display with integral keypad
(code L1; not with HART standard functionality)

Wide screen LCD, 128 x 64 pixel,
52.5 x 27.2 mm (2.06 x 1.07 in.) dot matrix.
Multilanguage. Four keys for configuration and management of device.
Easy setup for quick commissioning.
User selectable application-specific visualizations.
Totalized and instantaneous flow indication.
Display may also indicate static pressure, sensor temperature and diagnostic messages and provides configuration facilities.

Integral display with Through-The-Glass (TTG) activated keypad (code L5; not with HART standard functionality)

As above integral display but equipped with the innovative TTG keypad allowing the activation of the configuration and management menus of the device without the need of removing the transmitter housing cover. TTG keypad is protected against accidental activations.

Optional surge protection

Up to 4kV
– voltage 1.2 µs rise time / 50 µs delay time to half value
– current 8 µs rise time / 20 µs delay time to half value

Process diagnostics (PILD)

Plugged impulse line detection (PILD) generates a warning via communication (HART, PA, FF). The device can be configured to drive the output to “Alarm current” or set a status “BAD”.

HART® digital communication and 4 to 20 mA output – Standard and Advanced functionality

Device type: $1a06_{hex}$ (listed with HCF)

Power supply

The transmitter operates from 10.5 to 42 V DC with no load and is protected against reverse polarity connection (additional load allows operations over 42 V DC).
For Ex ia and other intrinsically safe approval power supply must not exceed 30 V DC. Minimum operating voltage increases to 12.3 V DC with optional surge protector or to 10.8 V DC with optional conformity to NAMUR NE 21 (2004).

Ripple

20 mV max on a 250 Ω load as per HART specifications.

Load limitations

4 to 20 mA and HART total loop resistance :

$$R\ (k\Omega) = \frac{\text{Supply voltage} - \text{min. operating voltage (V DC)}}{22\ \text{mA}}$$

A minimum of 250 Ω is required for HART communication.

Output signal

Two–wire 4 to 20 mA, user-selectable for linear or 22 points linearization table (i.e. for horizontal or spherical tank level measurement).
HART® communication provides digital process variable superimposed on 4 to 20 mA signal, with protocol based on Bell 202 FSK standard.
HART revision 7 is the default HART output.
HART revision 5 is selectable on request.

Output current limits (to NAMUR NE 43 standard)

Overload condition
- Lower limit: 3.8 mA (configurable from 3.8 to 4 mA)
- Upper limit: 20.5 mA (configurable from 20 to 21 mA)

Alarm current
- Lower limit: 3.6 mA (configurable from 3.6 to 4 mA)
- Upper limit: 21 mA (configurable from 20 to 23 mA, limited to 22 mA for HART Safety; apply for electronics release 7.1.15 or later).

Factory setting: high alarm current

...Specification – electrical characteristics and options

IEC 62591 WirelessHART® output

Device type: 1a06$_{hex}$ (listed with HCF)
Network ID: ABB$_{hex}$ (2747 decimal)
Join keys: 57495245$_{hex}$ (1464422981) 4c455353$_{hex}$ (1279611731) 4649454c$_{hex}$ (1179206988) 444b4559$_{hex}$ (1145783641).

Power supply

1x D-cell size lithium-thionyl chloride battery.
Battery life: 10 years at 32 sec. update time, 8 years at 16 sec. update time or 5 years at 8 sec. update time.
(at reference conditions of 25 ± 2 °C ambient temperature, data routed from 3 additional devices, LCD off).
THE BATTERY CAN BE REPLACED IN FIELD, ALSO IN HAZARDOUS CLASSIFIED AREA.

Output signal

IEC 62591 WirelessHART Version 7.5 (IEEE 802.15.4-2006);
Frequency band: 2.4 GHz DSSS
Update rate: user selectable from 1 sec. to 60 min.

Integrated adjustable omnidirectional antenna

– Output radio frequency: maximum 10 mW (10 dBm) EIRP
– Range: up to 300 m. (328 yds.)
Minimum distance between antenna and person is 0.2 m. (8 in.)

Telecommunications directive

Every wireless measuring device must be certified in accordance with the telecommunications directive, in this case the frequency range.
This certification is country-specific.

European directives

Radio Equipment & Telecommunications Terminal Equipment Directive 2014/53/UE to standards EN 60950-1:2013, EN 62311:2008, EN 301 489-1 V1.9.2, EN 301 489-17 V2.2.1, EN 300 328 v1.8.1.
In Europe, use of the 2400 – 2483.5 MHz frequency band is not harmonized. Country-specific regulations must be observed.

Restrictions for Norway

Operation not permitted within a radius of 20 km around Ny-Alesund in Svalbard. For more information, see www.npt.no Norway Posts and Telecommunications site

Extra-european radio frequency licences

USA to FCC Part 15.247:2009;
Canada to IC RSS-210 and ICES-003;
Argentina; United Arab Emirates (UAE); India; Mexico.

PROFIBUS® PA output

Device type

Pressure transmitter compliant to Profiles 3.0.1
Identification number: 3450$_{hex}$

Power supply

The transmitter operates from 9 to 32 V DC , polarity independent, with or without surge protector.
For Ex ia approval power supply must not exceed 17.5 V DC.
Intrinsic safety installation according to FISCO model.

Current consumption

operating (quiescent): 15 mA
fault current limiting: 20 mA max.

Output signal

Physical layer in compliance to IEC 61158–2/EN 61158–2.
Transmission to Manchester II modulation, at 31.25 kbit/s.

Output interface

PROFIBUS PA communication according to Profibus DP50170 Part 2/DIN 19245 part 1–3.

Output update time

25 ms

Data blocks

3 analog input, 1 physical.

Additional blocks

1 Pressure with calibration transducer block
1 Advanced Diagnostics transducer block including Plugged Input Line Detection
1 Local Display transducer block

Transmitter failure mode

On gross transmitter failure condition, detected by self-diagnostics, the output signal can be driven to defined conditions, selectable by the user as safe, last valid or calculated value.
If electronic failure or short circuit occur the transmitter consumption is electronically limited at a defined value (20 mA approx), for safety of the network.

FOUNDATION Fieldbus™ output

Device type

LINK MASTER DEVICE
Link Active Scheduler (LAS) capability implemented.
Manufacturer code: 000320_{hex}
Device type code: 0007_{hex}

Power supply

The transmitter operates from 9 to 32 V DC, polarity independent, with or without surge protector.
For Ex ia approval power supply must not exceed 24 V DC (FF–816 certification) or 17.5 V DC (FISCO certification).

Current consumption

operating (quiescent): 15 mA
fault current limiting: 20 mA max.

Output signal

Physical layer in compliance to IEC 61158–2/EN 61158–2.
Transmission to Manchester II modulation, at 31.25 kbit/s.

Function blocks/execution period

3 enhanced Analog Input blocks/25 ms max (each)
1 enhanced PID block/40 ms max.
1 standard Aritmetic block/25 ms
1 standard Input Selector block/25 ms
1 standard Control Selector block/25 ms
1 standard Signal Characterization block/25 ms
1 standard Integrator/Totalizer block/25 ms

Additional blocks

1 enhanced Resource block,
1 custom Pressure with calibration transducer block
1 custom Advanced Diagnostics transducer block including Plugged Input Line Detection
1 custom Local Display transducer block

Number of link objects

35

Number of VCRs

35

Output interface

FOUNDATION fieldbus digital communication protocol to standard H1, compliant to specification V. 1.7.

Transmitter failure mode

The output signal is “frozen” to the last valid value on gross transmitter failure condition, detected by self-diagnostics which also indicate a BAD conditions. If electronic failure or short circuit occur the transmitter consumption is electronically limited at a defined value (20 mA approx), for safety of the network.

Specification – performance

Stated at reference condition to IEC 60770 ambient temperature of 20 °C (68 °F), relative humidity of 65 %, atmospheric pressure of 1013 hPa (1013 mbar), mounting position with vertical diaphragm and zero based range for transmitter with isolating diaphragms in AISI 316 L ss or Hastelloy and silicone oil fill and HART digital trim values equal to 4 mA and to 20 mA span end points, in linear mode.
Unless otherwise specified, errors are quoted as % of span.
Some performance referring to the Upper Range Limit are affected by the actual turndown (TD) as ratio between Upper Range Limit (URL) and calibrated span.
IT IS RECOMMENDED TO SELECT THE TRANSMITTER SENSOR CODE PROVIDING THE TURNDOWN VALUE AS LOWEST AS POSSIBLE TO OPTIMIZE PERFORMANCE CHARACTERISTICS.

Dynamic performance (according to IEC 61298–1 definition)

Sensors	Total response time
Sensor F to W	≤ 100 ms *
Sensor Z	≤ 110 ms

Total response time for sensor E ≤ 130 ms, for sensor B ≤ 310 ms *
* Availability subject to special request for sensors B to H and not applicable for explosionproof and flameproof.

Total response time includes dead time of 30 ms (for all sensors) with time constant @ 63.2 % of total step change.
See “Update Rate” for WirelessHART version..

Accuracy rating

% of calibrated span, including combined effects of terminal based linearity, hysteresis and repeatability.
For fieldbus versions SPAN refer to analog input function block outscale range

Model	Sensor	for TD	
266HSH	F to Q	from 1:1 to 10:1	± 0.06 %
	F to Q	from 10:1 to 100:1	± (0.006 x TD) %
	S, E	from 1:1 to 10:1	± 0.075 %
	S	from 10:1 to 100:1	± (0.0075 x TD) %
	E	from 10:1 to 30:1	± (0.0075 x TD) %
	W	from 1:1 to 5:1	± 0.075 %
	W	from 5:1 to 50:1	± (0.015 x TD) %
	Z	from 1:1 to 5:1	± 0.15 %
	Z	from 5:1 to 10:1	± (0.03 x TD) %
266HSH (option D2)	F to Q	from 1:1 to 5:1	± 0.04 %
	F to Q	from 5:1 to 100:1	± (0.0105 + 0.0059 x TD) %
266NSH	F to S	from 1:1 to 10:1	± 0.075 %
	F to S	from 10:1 to 60:1	± (0.0075 x TD) %

Ambient temperature

per 20K change between the limits of –40 °C to +85 °C (per 36 °F change between the limits of –40 to +185 °F):

Model	Sensor	for TD up to	
266HSH	F to Q	10:1	± (0.03 % URL + 0.045 % span)
	E and S	10:1	± (0.04 % URL + 0.065 % span)
	W	5:1	± (0.04 % URL + 0.065 % span)
	Z	10:1	± (0.06 % URL + 0.10 % span)
266NSH	F to Q	10:1	± (0.06 % URL + 0.09 % span)
	S	10:1	± (0.08 % URL + 0.13 % span)

for an ambient temperature change from –10 °C to +60 °C (+14 to +140 °F):

Model	Sensor	for TD up to	
266HSH	F to Q	10:1	± (0.055 % URL + 0.08 % span)
	E and S	10:1	± (0.075 % URL + 0.11 % span)
	W	5:1	± (0.075 % URL + 0.11 % span)
	Z	10:1	± (0.10 % URL + 0.15 % span)
266NSH	F to Q	10:1	± (0.11 % URL + 0.16 % span)
	S	10:1	± (0.15 % URL + 0.22 % span)

per 10K change between the limits of –40 °C to –10 °C or +60° to +85 °C (per 18 °F change between the limits of –40 to +14 °F or +140° to +185 °F):

Model	Sensor	for TD up to	
266HSH	F to Q	10:1	± (0.03 % URL + 0.04 % span)
	E and S	10:1	± (0.04 % URL + 0.055 % span)
	W	5:1	± (0.04 % URL + 0.055 % span)
	Z	10:1	± (0.06 % URL + 0.10 % span)
266NSH	F to Q	10:1	± (0.055 % URL + 0.08 % span)
	S	10:1	± (0.075 % URL + 0.11 % span)

Supply voltage

Within voltage/load specified limits the total effect is less than 0.005 % of URL per volt.

Load

Within load/voltage specified limits the total effect is negligible.

Electromagnetic field

Meets all the requirements of EN 61326 for surge immunity level (of NAMUR NE 21 on request).

Common mode interference

No effect from 100Vrms @ 50Hz, or 50 V DC

Mounting position

No effect for rotation on diaphragm plane. A tilt up to 90° from vertical causes a zero shifts up to 0.5 kPa, 5 mbar or 2 inH_2O, which can be corrected with zero adjustment. No span effect.

Stability

±0.15 % of URL over a ten years period for sensors E to W
±0.45 % of URL over a three years period for sensor Z

Maximum total performance

For temperature change of 28 °C (50 °F) for model 266HSH with accuracy option code D2 (± 0.04 %)

Sensor	Span	Maximum total performance
M	550 kPa, 5,5 bar, 80 psi	
P	2000 kPa, 20 bar, 290 psi	≤± 0.120 % of calibrated span
Q	6900 kPa, 69 bar, 1000 psi	

$$E_{Mperf} = \sqrt{(E_{\Delta Tz} + E_{\Delta Ts})^2 + E_{lin}{}^2}$$

E_{Mperf} = Maximum total performance
$E_{\Delta Tz}$ = Effect of the ambient temperature on zero
$E_{\Delta Ts}$ = Effect of the ambient temperature on span
E_{lin} = Accuracy rating (for terminal-based linearity 0.04 %)

Total performance

similar to DIN 16086. Temperature change in the range from -10 to 60 °C (14 to 140 °F)

Model	Sensor	TD	Total performance
266HSH, D2 option	F to Q	1:1	≤± 0.14 % of calibrated span
266NSH	F to Q	1:1	≤± 0.28 % of calibrated span

$$E_{perf} = \sqrt{(E_{\Delta Tz} + E_{\Delta Ts})^2 + E_{lin}{}^2}$$

E_{perf} = Total Performance
$E_{\Delta Tz}$ = Effect of the ambient temperature on zero
$E_{\Delta Ts}$ = Effect of the ambient temperature on span
E_{lin} = Accuracy rating (for terminal-based linearity 0.04 % or 0.075% as per model/sensor accuracy)

Maximum total performance and Total performance includes the measuring errors of

- non-linearity including hysteresis and non-reproducibility,
- thermal change of the ambient temperature as regards the zero signal and the calibrated span.

Specification – physical

(Refer to ordering information sheets for variant availability related to specific model or versions code)

Materials

Process isolating diaphragms (*)

AISI 316 L ss; AISI 316 L ss gold plated;
Hastelloy® C-276; Monel 400®; Tantalum; (sensors E to S).
AISI 316 L ss; Hastelloy® C-276; (sensor W).
Inconel 718 (sensor Z).

Process connection (*)

AISI 316 L ss; Hastelloy® C-276; Monel 400® (sensor F to S).
AISI 316 L ss; Hastelloy® C-276; (sensor W).
Inconel® 718 (sensor Z) with cone in Inconel® 625 for F250C connection only.

Sensor fill fluid

Silicone oil; Inert fill (Galden®).

Mounting bracket (**)

Zinc plated carbon steel with chrome passivation;
AISI 316 L ss.

Sensor housing

AISI 316 L ss.

Electronic housing and covers

Aluminium alloy (copper content ≤ 0.3 %) with baked epoxy finish (colour RAL9002); AISI 316 L ss.

Covers O-ring

Buna N.

Local adjustments (zero, span and write protect)

For Standard HART version:

- Internal for zero and span (on communication board)
- External non-intrusive for zero, span and write protect in glass filled polyphenylene oxyde, removable (code R1).

For all other versions:

- External non-intrusive for zero, span and write protect in glass filled polyphenylene oxyde, removable.

Plates

Transmitter nameplate: AISI 316 ss screwed to the electronics housing.
Certification plate and optional tag/calibration plate : self-adhesive attached to the electronics housing or AISI 316 ss fastened to the electronics housing with rivets or screws.
Optional wired-on customer data plate: AISI 316 ss.
Laser printing on metal or thermal printing on self-adhesive.For AISI 316 L ss housing it is mandatory to select option I2 or I3 for plates in AISI 316 ss.

Calibration

Standard: at maximum span, zero based range, ambient temperature and pressure;
Optional: at specified range and ambient conditions.
Device is delivered with a standard 4-point calibration record

(*) Wetted parts of the transmitter.

(**) U-bolt material: high-strength alloy steel or AISI 316 L ss; bolts/nuts material: high-strength alloy steel or AISI 316 ss.

Optional extras

Mounting brackets (code Bx)

For 60mm. (2in) pipes or wall mounting.

Display (code Lx)

4-position (at 90°) user orientable, except “LS”.

Optional plates (code Ix)

Code I2: AISI 316 ss plate with laser printed tag (up to 32 characters - long) and calibration details (up to 32 characters: lower and upper range values and engineering unit) fixed onto transmitter housing.
Code I1: AISI 316 ss wired-on plate with laser printed customized data (4 lines of 32 characters with 4 mm/0.16 in. height).

Surge protection (code S2)

Cleaning procedure for oxygen service (code P1)

Test Certificates (test, design, calibration, material traceability) (codes Cx and Hx)

Tag and manual language (codes Tx and Mx)

Communication connectors (code Ux)

Manifold mounting (code A1)

Factory mounting and pressure test of ABB M26 manifolds.

Process connections

For sensors F to S

$^1/_2$ in. – 14 NPT male or female; DIN EN837-1 G $^1/_2$ B; adapter straight (180°) entry; adapter angle (90°) entry.

For sensor W

$^1/_2$ in. – 14 NPT male or female.

For sensor Z

$^1/_4$ in. – 18 NPT female; F250C (autoclave).

Electrical connections

Two $^1/_2$ in. – 14 NPT or M20x1.5 threaded conduit entries, direct on housing. Only M20x1.5 for WirelessHART with one port used for antenna.
One certified stainless steel plug (supplied loose with thread according to housing entries) available as option.

Terminal block

HART version: three terminals for signal/external meter wiring up to 2.5 mm^2 (14 AWG), also connection points for test and communication purposes.
WirelessHART version: connection points for test and communication purposes; additional fast connection for external harvesting unit.
Fieldbus versions: two terminals for signal wiring (bus connection) up to 2.5 mm^2 (14 AWG)

Grounding

Internal and external 6 mm^2 (10 AWG) ground termination points are provided.

Mounting position

Transmitter can be mounted in any position.
Electronics housing may be rotated to any position. A positive stop prevents over travel.

Mass (without options)

2.1 kg approx (4.6 lb); add 1.5 kg (3.3 lb) for AISI housing. Add 650 g (1.5 lb) for packing.

Packing

Carton 27 x 24 x 20 cm approx (11 x 10 x 8 in.).

Specification – configuration

Transmitter with HART communication and 4 to 20 mA

Standard configuration

Transmitters are factory calibrated to customer's specified range. Calibrated range and tag number are stamped on the tag plate. If a calibration range and tag data are not specified, the transmitter will be supplied with the plate left blank and configured as follows:

Engineering Unit	kPa
4 mA	Zero
20 mA	Upper Range Limit (URL)
Output	Linear
Damping	1 s
Transmitter failure mode	Upscale
Tag	Blank (up to 32 alphanumeric characters - long; only 8 visible on display - short)
Optional LCD display	PV in kPa; output in mA and in percentage on bargraph

Any or all the above configurable parameters, including Lower range–value and Upper range-value which must be the same unit of measure, can be easily changed using the HART hand–held communicator or by a PC running the configuration software with DTM for 266 models. The transmitter database is customized with specified flange type and material, O–ring and drain/vent materials and meter code option.

Custom configuration (option N6)

The following data may be specified in addition to the standard configuration parameters:

Descriptor	16 alphanumeric characters
Message	32 alphanumeric characters
Date	Day, month, year

For HART protocol available engineering units of pressure measure are :

Pa, kPa, MPa
inH_2O@4 °C, mmH2O@4 °C, psi
inH_2O@68 °F, ftH_2O@68 °F, mmH_2O@68 °F
inHg, mmHg, Torr
g/cm^2, kg/cm^2, atm
mbar, bar
These and others are available for PROFIBUS and FOUNDATION Fieldbus.

Transmitter with WirelessHART communication

Standard configuration

Transmitters are factory calibrated to customer's specified range. Calibrated range and tag number are stamped on the tag plate. If a calibration range and tag data are not specified, the transmitter will be supplied with the plate left blank and configured as follows:

Engineering Unit	kPa
Output scale 0 %	Lower Range Limit (LRL)
Output scale 100 %	Upper Range Limit (URL)
Output	Linear
Update time	16 s
Tag	Blank (up to 32 alphanumeric characters - long; only 8 visible on display - short)
Optional LCD display	PV in kPa; output in percentage on bargraph

Any or all the above configurable parameters, including Lower range–value and Upper range-value which must be the same unit of measure, can be easily changed using the HART hand–held communicator or by a PC running the configuration software with DTM for 266 models. The transmitter database is customized with specified flange type and material, O–ring and drain/vent materials and meter code option.

Custom configuration (option N6)

The following data may be specified in addition to the standard configuration parameters:

Descriptor	16 alphanumeric characters
Message	32 alphanumeric characters
Date	Day, month, year

Transmitter with PROFIBUS PA communication

Standard configuration

Transmitters are factory calibrated to customer's specified range. Calibrated range and tag number are stamped on the tag plate. If a calibration range and tag data are not specified, the transmitter will be supplied with the plate left blank and configured as follows:

Measure Profile	Pressure
Engineering Unit	kPa
Output scale 0 %	Lower Range Limit (LRL)
Output scale 100 %	Upper Range Limit (URL)
Output	Linear
Hi-Hi Limit	Upper Range Limit (URL)
Hi Limit	Upper Range Limit (URL)
Low Limit	Lower Range Limit (LRL)
Low-Low Limit	Lower Range Limit (LRL)
Limits hysteresis	0.5 % of output scale
PV filter	0 s
Address (set by local key)	126
Tag	PI000 (up to 32 alphanumeric characters; only 8 visible on display)
Optional LCD display	PV in kPa; output in percentage on bargraph

Any or all the above configurable parameters, including the range values which must be the same unit of measure, can be easily changed by a PC running the configuration software with DTM for 266 models.The transmitter database is customized with specified flange type and material, O–ring and drain/vent materials and meter code option.

Custom configuration (option N6)

The following data may be specified in addition to the standard configuration parameters:

Descriptor	32 alphanumeric characters
Message	32 alphanumeric characters
Date	Day, month, year

Transmitter with FOUNDATION Fieldbus communication

Standard configuration

Transmitters are factory calibrated to customer's specified range. Calibrated range and tag number are stamped on the tag plate. If a calibration range and tag data are not specified, the transmitter will be supplied with the plate left blank and the analog input function block FB1 is configured as follows:

Measure Profile	Pressure
Engineering Unit	kPa
Output scale 0 %	Lower Range Limit (LRL)
Output scale 100 %	Upper Range Limit (URL)
Output	Linear
Hi-Hi Limit	Upper Range Limit (URL)
Hi Limit :	Upper Range Limit (URL)
Low Limit	Lower Range Limit (LRL)
Low-Low Limit	Lower Range Limit (LRL)
Limits hysteresis	0.5 % of output scale
PV filter time	0 s
Tag	PI000 (up to 32 alphanumeric characters; only 8 visible on display)
Optional LCD display	PV in kPa; output in percentage on bargraph

The analog input function block FB2 and FB3 are configured respectively for the sensor temperature measured in °C and for the static pressure measured in MPa.

Any or all the above configurable parameters, including the range values, can be changed using any host compliant to FOUNDATION fieldbus. The transmitter database is customized with specified flange type and material, O–ring and drain/vent materials and meter code option.

Custom configuration (option N6)

The following data may be specified in addition to the standard configuration parameters:

Descriptor	32 alphanumeric characters
Message	32 alphanumeric characters
Date	Day, month, year

Dimensions

(not for construction unless certified) – dimensions in mm. (in.)

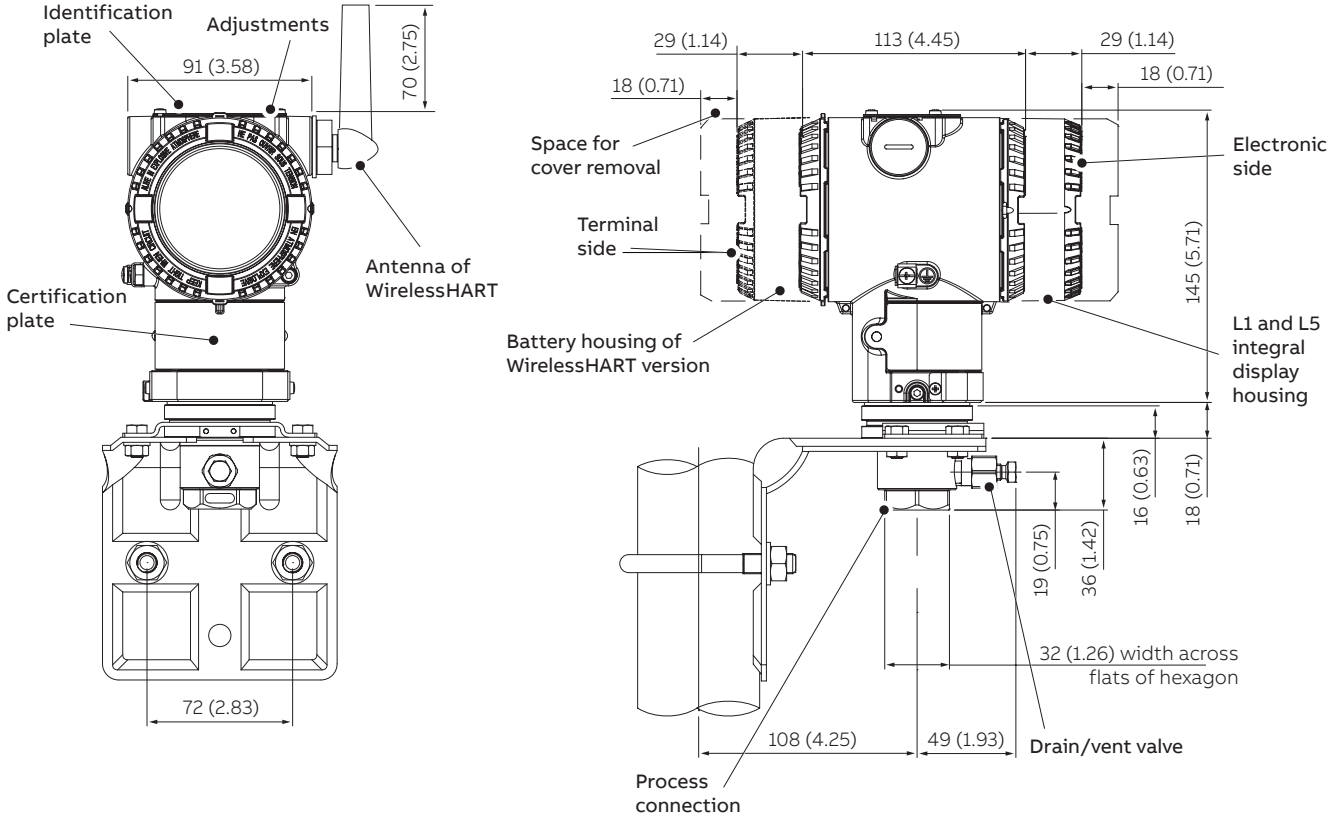

Figure 1 Transmitter with barrel housing – ½ in. NPT female connection for sensor E to S

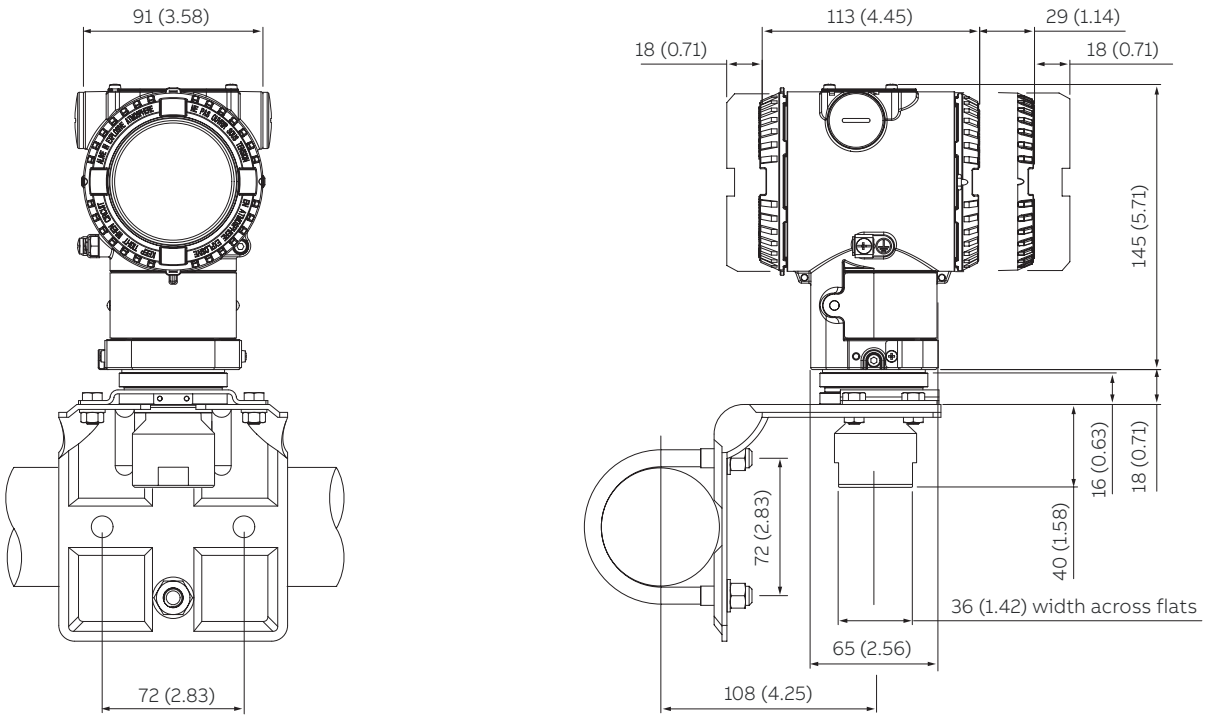

Figure 2 Transmitter with barrel housing – ½ in. NPT female connection for sensor W

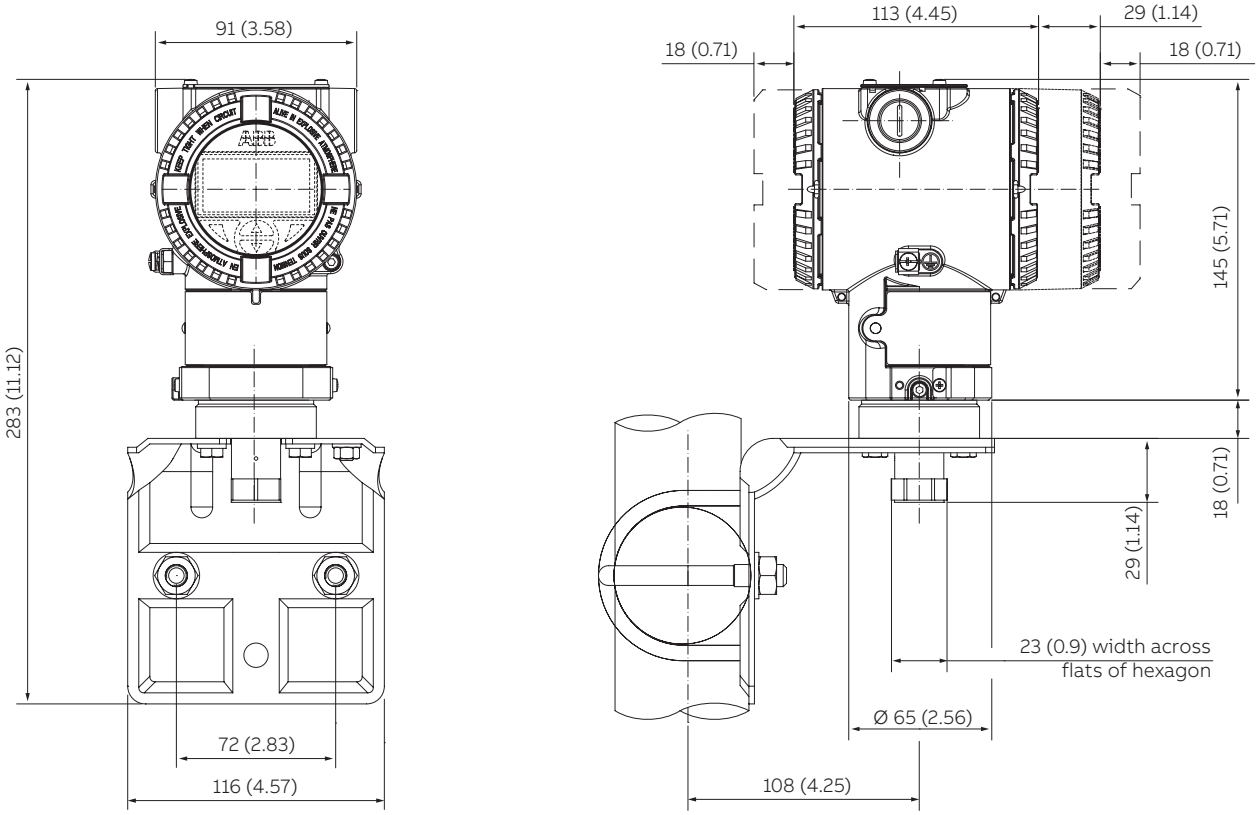

Figure 3 Transmitter with barrel housing – F250C female connection for sensor Z

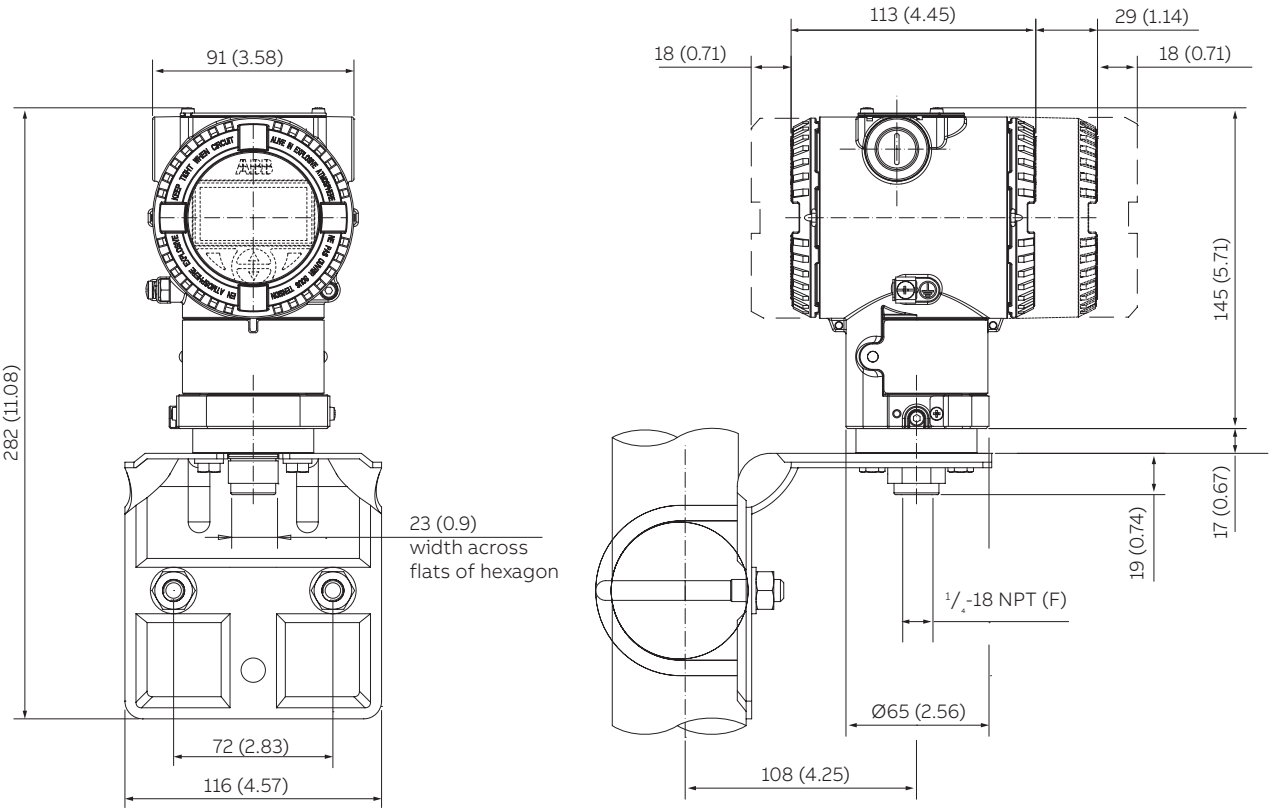

Figure 4 Transmitter with barrel housing – 1/4 in. NPT female connection for sensor Z

...Dimensions

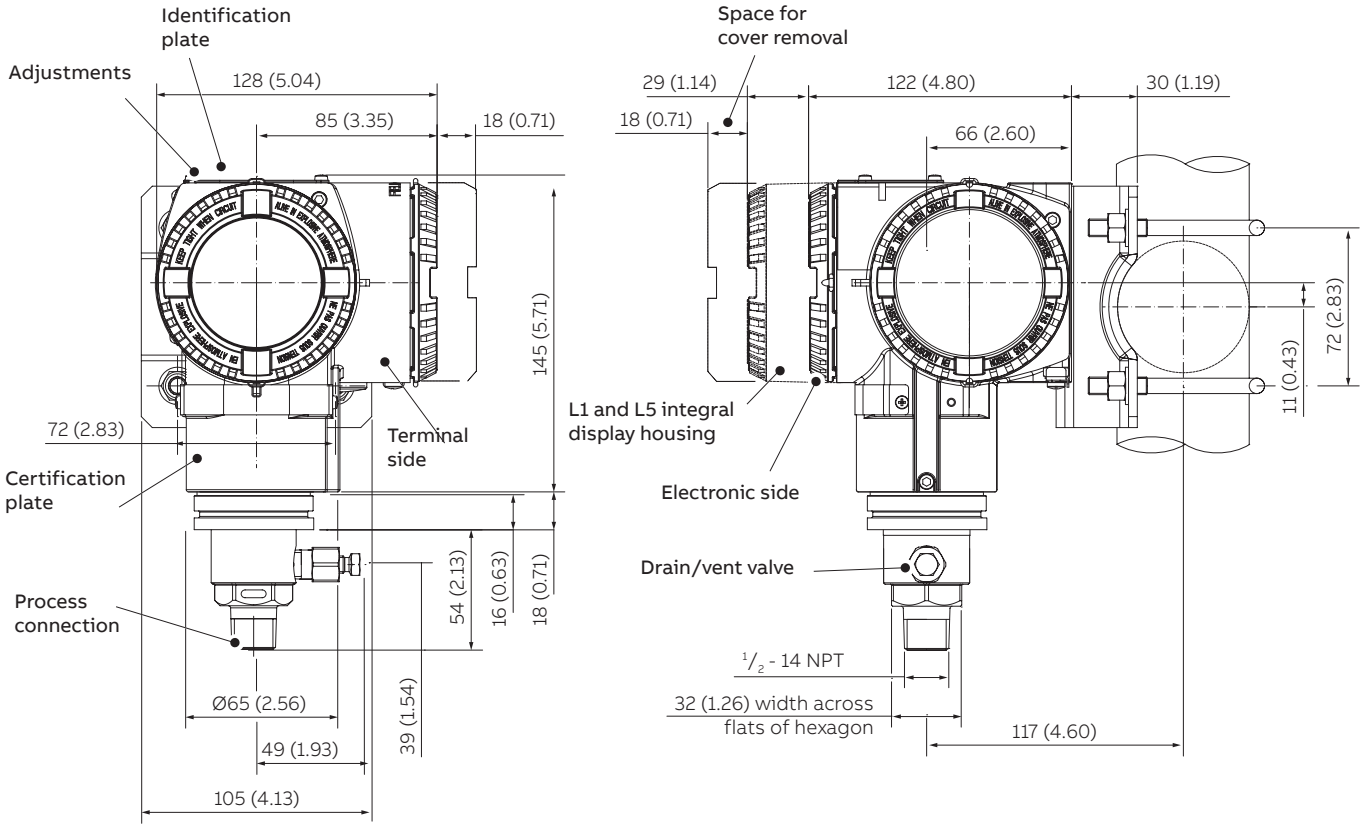

Figure 5 Transmitter with DIN aluminium housing – ½ in. NPT male connection for sensor E to S

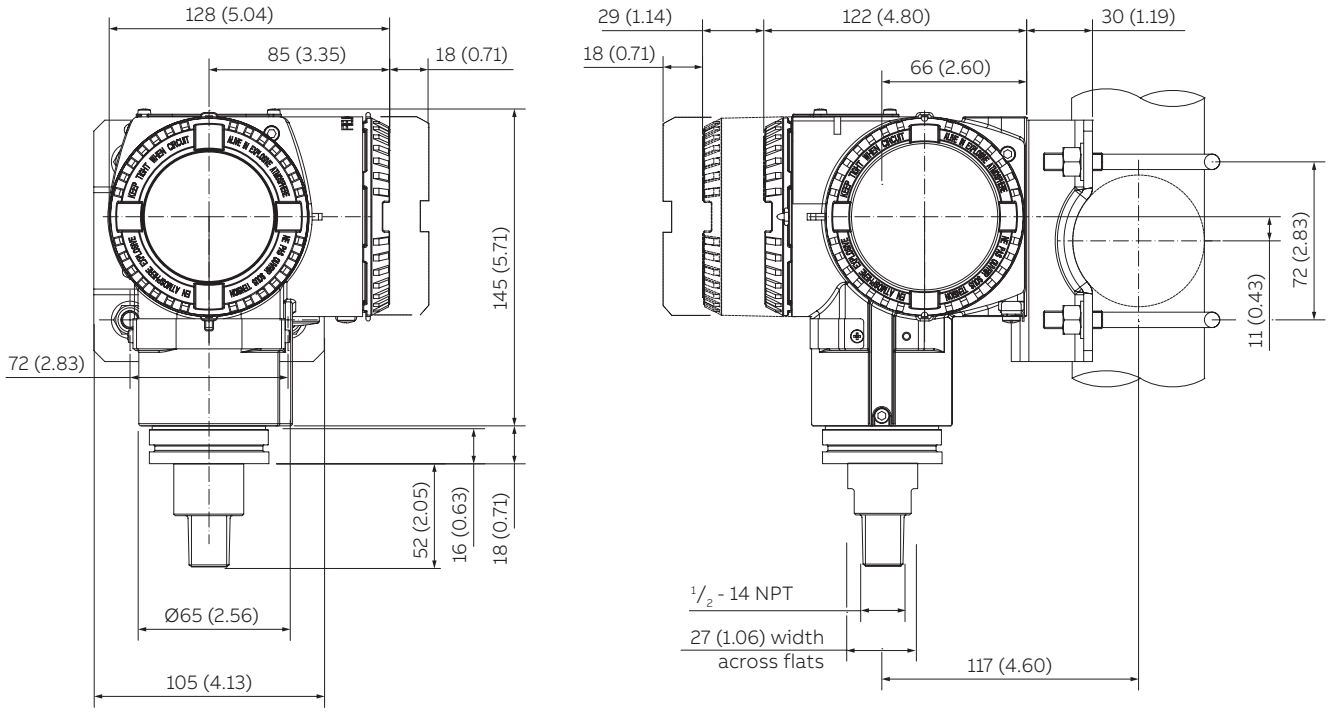

Figure 6 Transmitter with DIN aluminium housing – 1/2 in. NPT male connection for sensor W

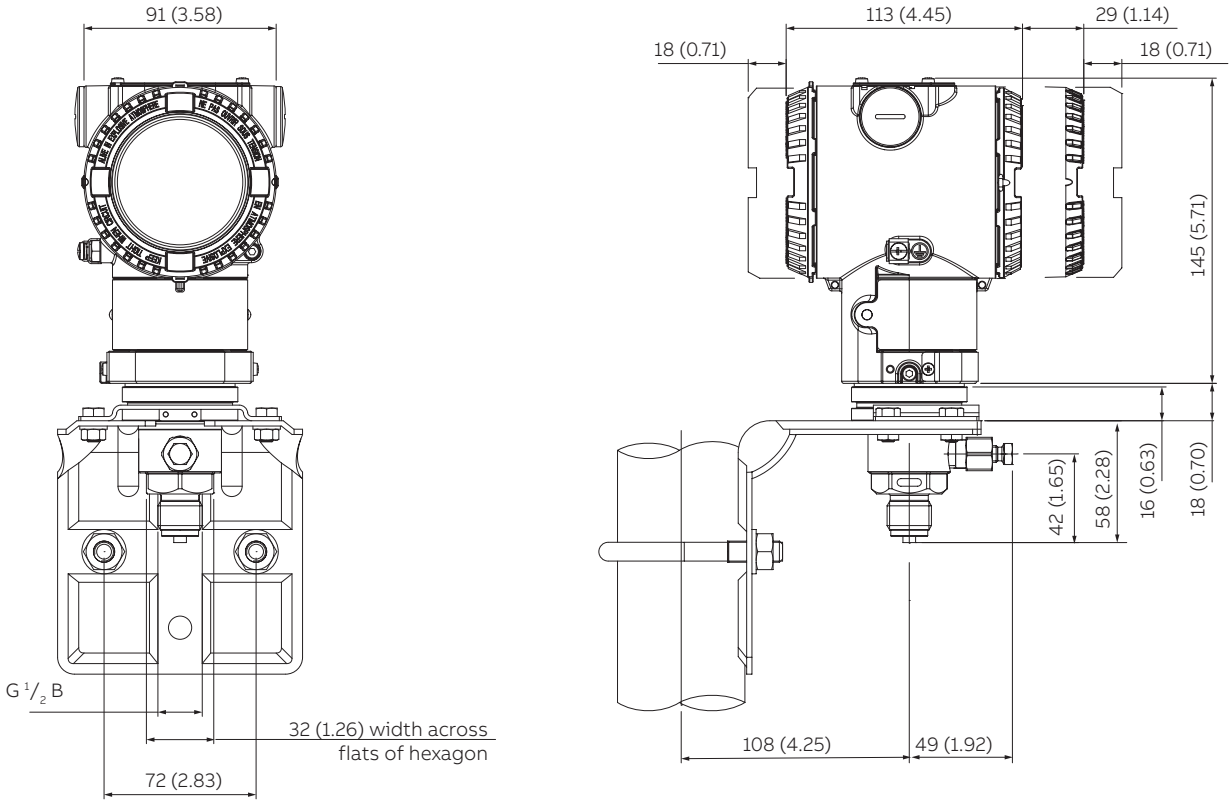

Figure 7 Transmitter with barrel housing – DIN-EN837-1 G 1/2 B connection for sensor E to S

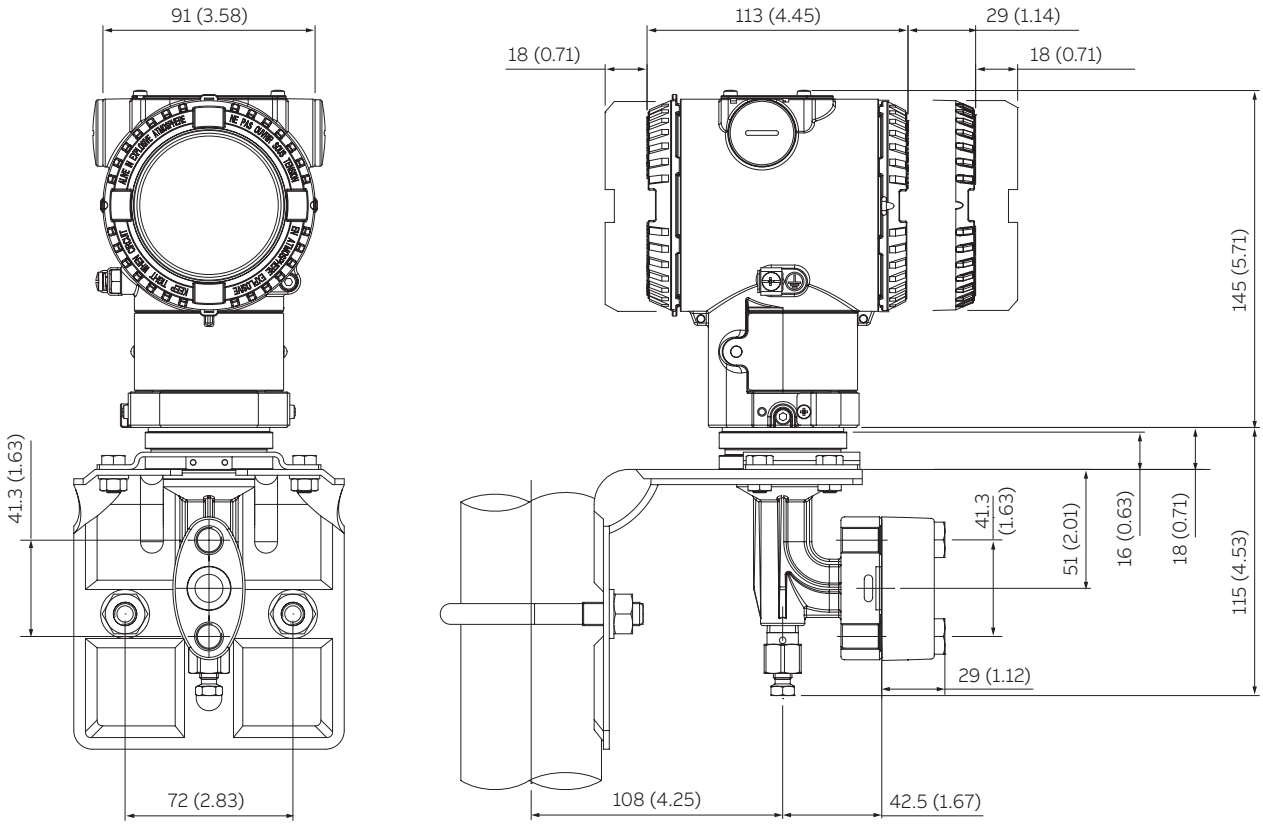

Figure 8 Transmitter with barrel housing – adapter angle (90°) entry connection for sensor E to S

...Dimensions

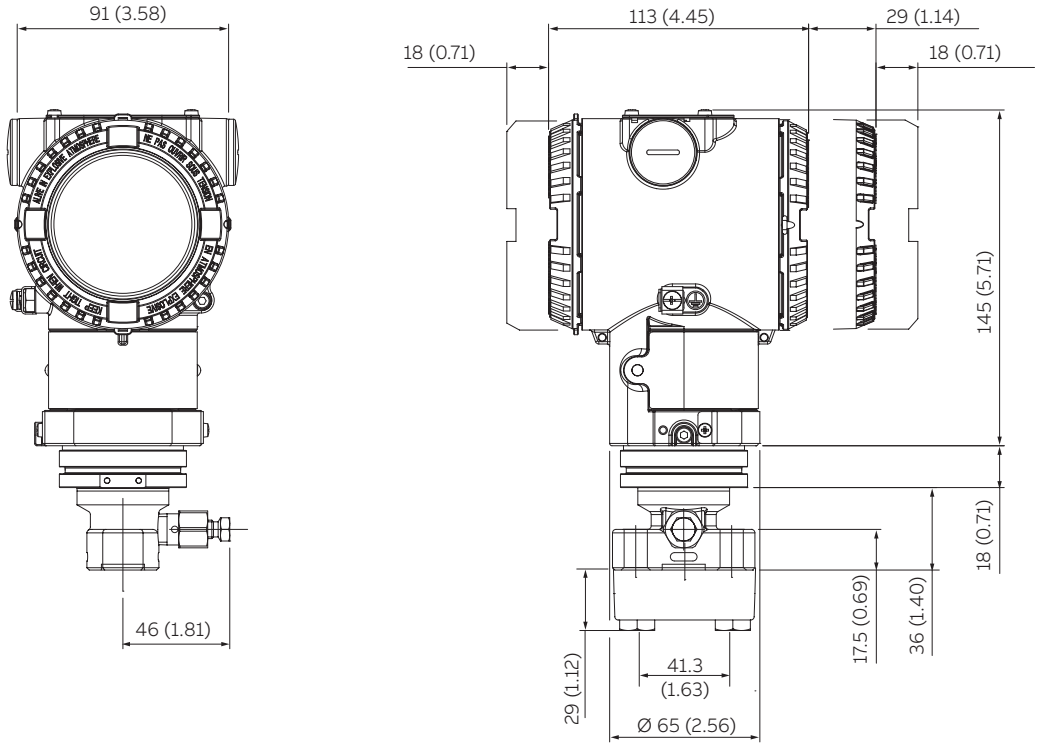

Figure 9 Transmitter with barrel housing – adapter straight (180°) entry connection for sensor E to S

Electrical connections

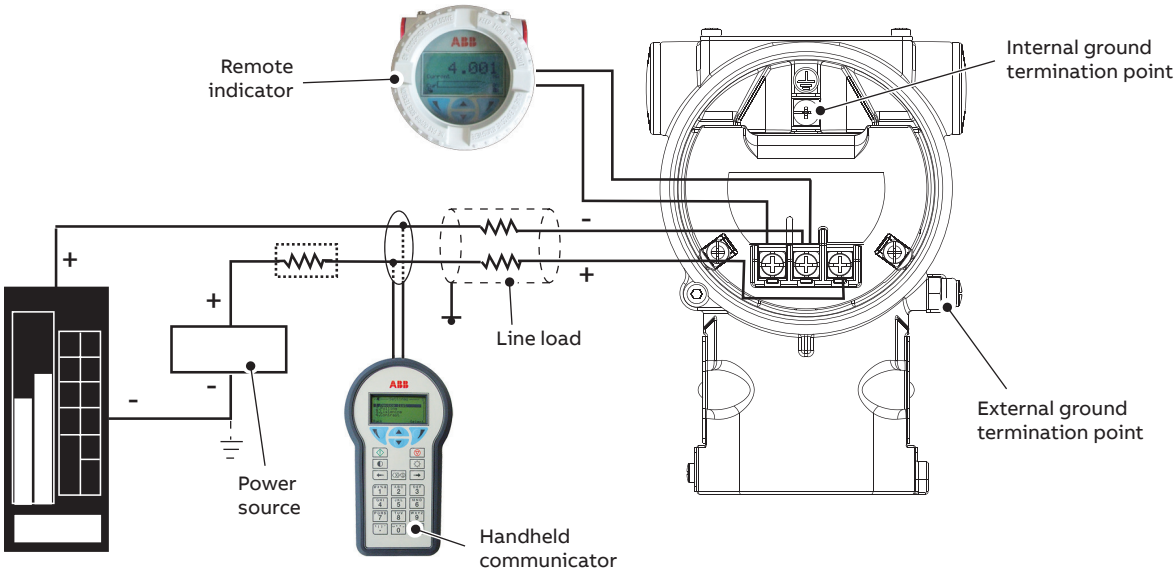

HART hand-held communicator may be connected at any wiring termination point in the loop, providing the minimum resistance is 250 ohm. If this is less than 250 ohm, additional resistance should be added to allow communications. Maximum voltage drop on external remote indicator is 0.7 V DC.

Figure 10 HART Version

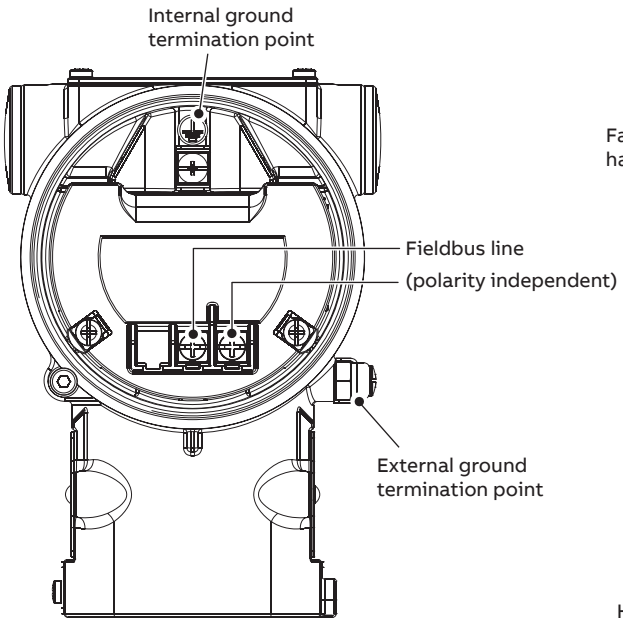

Figure 11 FIELDBUS VersionsVersions

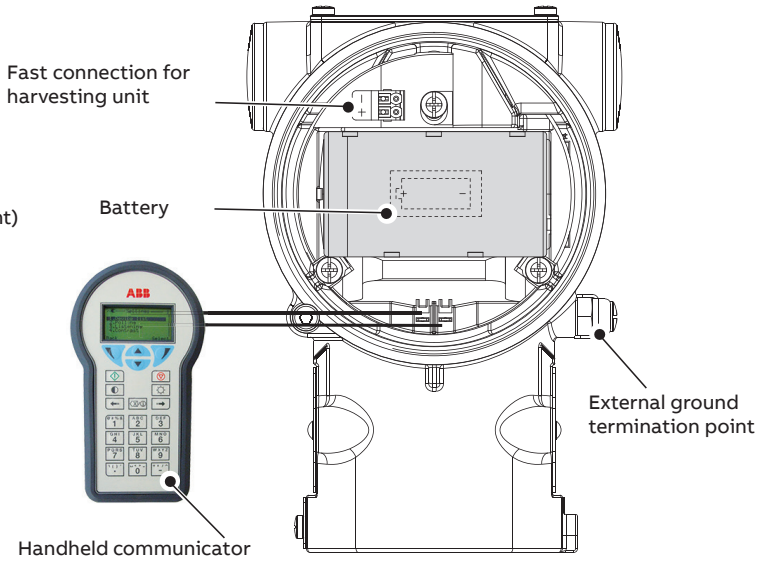

Figure 12 WirelessHART version

Ordering information

Basic ordering information for model 266HSH Gauge Pressure Transmitter

Select one character or set of characters from each category and specify complete catalog number.

Refer to additional ordering information and specify one or more codes for each transmitter if additional options are required.

BASE MODEL – 1st to 6th characters					**2 6 6 H S H**	**X**	**X**	**X**	**X**	**X**
Gauge Pressure Transmitter – BASE ACCURACY 0.06 %										
SENSOR – Span limits – 7th character										
0.54 and 16 kPa	5.4 and 160 mbar	2.16 and 64 inH_2O				E				
0.4 and 40 kPa	4 and 400 mbar	1.6 and 160 inH_2O				F				
1.6 and 160 kPa	16 and 1600 mbar	6.4 and 642 inH_2O				H				
6 and 600 kPa	0.06 and 6 bar	0.87 and 87 psi				M				
24 and 2400 kPa	0.24 and 24 bar	3.5 and 348 psi				P				
80 and 8000 kPa	0.8 and 80 bar	11.6 and 1160 psi				Q				
160 and 16000 kPa	1.6 and 160 bar	23.2 and 2320 psi				S				
1400 and 70000 kPa	14 and 700 bar	203 and 10150 psi	(REMARK)	(Note 22)		W				
10500 and 105000 kPa	105 and 1050 bar	1522 and 15225 psi	(REMARK)	(Note 22)		Z				
Diaphragm material / Fill fluid (wetted parts) – 8th character										
AISI 316 L ss		Silicone oil		(Note 12)	NACE		S			
Hastelloy® C-276		Silicone oil		(Notes 11, 12, 22)	NACE		K			
Monel 400®		Silicone oil		(Notes 2, 11, 12, 22)	NACE		M			
AISI 316 L ss gold plated		Silicone oil		(Notes 2, 11, 12, 22)	NACE		8			
Tantalum		Silicone oil		(Notes 2, 11, 12, 22)	NACE		T			
AISI 316 L ss		Inert fluid – Galden		(Notes 1, 2, 12, 22)	NACE		A			
Hastelloy® C-276		Inert fluid – Galden		(Notes 1, 2, 11, 12, 22)	NACE		F			
Monel 400®		Inert fluid – Galden		(Notes 1, 2, 11, 12, 22)	NACE		C			
AISI 316 L ss gold plated		Inert fluid – Galden		(Notes 1, 2, 11, 12, 22)	NACE		9			
Tantalum		Inert fluid – Galden		(Notes 1, 2, 11, 12, 22)	NACE		D			
Inconel® 718		No filling	(for sensor Z ONLY)	(Notes 2, 3, 22)	NACE		N			

continued see next page

REMARK

SENSORS W and Z ARE NOT IN COMPLIANCE WITH ISA 12.27.01 FOR SEALING REQUIREMENTS, SPECIFICALLY FOR FM APPROVAL (Canada).

...Basic ordering information for model 266HSH Gauge Pressure Transmitter

					266HSHXX	X	X	X
Process connection (wetted parts) – 9th character								
AISI 316 L ss	1/2 in. – 14 NPT female		(Notes 4, 12)	NACE	B			
AISI 316 L ss	1/2 in. – 14 NPT male		(Notes 4, 12)	NACE	T			
AISI 316 L ss	DIN EN837-1 G 1/2 B		(Notes 2, 4, 12, 22)	NACE	P			
AISI 316 L ss	Adapter straight (180°) entry (not available with bracket)		(Notes 2, 4, 12, 22)	NACE	A			
AISI 316 L ss	Adapter angle (90°) entry		(Notes 2, 4, 12, 22)	NACE	N			
Hastelloy® C-276	1/2 in. – 14 NPT female		(Notes 5, 12, 22)	NACE	E			
Hastelloy® C-276	1/2 in. – 14 NPT male		(Notes 5, 12, 22)	NACE	K			
Hastelloy® C-276	DIN EN837-1 G 1/2 B		(Notes 2, 5, 12, 22)	NACE	D			
Hastelloy® C-276	Adapter straight (180°) entry (not available with bracket)		(Notes 2, 5, 12, 22)	NACE	F			
Hastelloy® C-276	Adapter angle (90°) entry		(Notes 2, 5, 12, 22)	NACE	C			
Monel 400®	1/2 in. – 14 NPT female		(Notes 2, 6, 12, 22	NACE	1			
Monel 400®	1/2 in. – 14 NPT male		(Notes 2, 6, 12, 22	NACE	2			
Monel 400®	DIN EN837-1 G 1/2 B		(Notes 2, 6, 12, 22	NACE	3			
Inconel® 718	F250C	(for sensor Z ONLY)	(Notes 2, 3, 22)	NACE	6			
Inconel® 718	1/4 in. – 18 NPT female	(for sensor Z ONLY)	(Notes 2, 3, 22)	NACE	7			
Housing material and electrical connection – 10th character								
Aluminium alloy (barrel version)	1/2 in. – 14 NPT			(Note 17)			A	
Aluminium alloy (barrel version)	M20 x 1.5 (CM 20)	(TO BE USED for WirelessHART)		(Note 22)			B	
AISI 316 L ss (barrel version) (I2 or I3 required)	1/2 in. – 14 NPT			(Note 17)			S	
AISI 316 L ss (barrel version) (I2 or I3 required)	M20 x 1.5 (CM20)	(TO BE USED for WirelessHART)		(Note 22)			T	
Aluminium alloy (DIN version)	M20 x 1.5 (CM20)	(not Ex d or XP)		(Notes 17, 22)			J	
Output/Additional options – 11th character								
HART and 4 to 20 mA – Standard functionality				(Note 12)				7
HART and 4 to 20 mA – Advanced functionality (includes option R1)								1
PROFIBUS PA (includes option R1)								2
FOUNDATION Fieldbus (includes option R1)								3
HART and 4 to 20 mA Safety, certified to IEC 61508 (includes option R1)				(Note 22)				8
WirelessHART (includes option R1)				(Notes 12, 16, 22)				9

NOTE – Option R1 represents the external pushbuttons

...Ordering information

Additional ordering information for model 266HSH

Add one or more 2-digit code(s) after the basic ordering information to select all required options

				XX	XX	XX
Accuracy						
0.04 % accuracy for applicable ranges			(Notes 13, 17)	D2		
Drain/vent valve material (wetted parts)						
AISI 316 L ss	(Notes 2, 7, 12)	NACE			VA	
Hastelloy® C-276	(Notes 2, 8, 12)	NACE			VB	
Monel 400®	(Notes 2, 9, 12)	NACE			VC	
Hazardous area certifications						
ATEX Intrinsic Safety Ex ia			(Note 22)			E1
ATEX Explosion Proof Ex db_tb			(Notes 10, 17, 22)			E2
ATEX Intrinsic Safety Ex ic_tc			(Notes 17, 22)			E3
Combined ATEX, IECEx, FM Approvals (USA) and FM Approvals (Canada)			(Notes 10, 17, 22)			EN
FM Approvals (Canada) approval			(Notes 10, 17)			E4
FM Approvals (USA) approval			(Notes 10, 17)			E6
FM Approvals (USA and Canada) Intrinsically Safe						EA
IECEx Intrinsic Safety Ex ia			(Note 22)			E8
IECEx Explosion Proof Ex db_tb			(Notes 10, 17, 22)			E9
IECEx Intrinsic Safety Ex ic_tc			(Notes 17, 22)			ER
NEPSI Intrinsic Safety Ex ia			(Notes 17, 22)			EY
NEPSI Explosion Proof Ex db			(Notes 10, 17, 22)			EZ
NEPSI Type „N“			(Notes 17, 22)			ES

... Additional ordering information for model 266HSH

		XX	XX	XX	XX	XX	XX
Other hazardous area certifications (ONLY AS ALTERNATIVE TO BASIC CERTIFICATION CODE Ex)							
Technical Regulations Customs Union (EAC) Intrinsic Safety Ex ia for Russia	(Notes 17, 22)	W1					
Technical Regulations Customs Union (EAC) Explosion Proof Ex d for Russia	(Notes 10, 17, 22)	W2					
Technical Regulations Customs Union (EAC) combined Ex ia and Ex d for Russia	(Notes 10, 17, 22)	WC					
Technical Regulations Customs Union (EAC) Intrinsic Safety Ex ia for Kazakhstan	(Notes 17, 22)	W3					
Technical Regulations Customs Union (EAC) Explosion Proof Ex d for Kazakhstan	(Notes 10, 17, 22)	W4					
Technical Regulations Customs Union (EAC) combined Ex ia and Ex d for Kazakhstan	(Notes 10, 17, 22)	WD					
Inmetro (Brazil) Ex ia	(Notes 17, 22)	W5					
Inmetro (Brazil) Ex d	(Notes 10, 17, 22)	W6					
Inmetro (Brazil) Ex nL	(Notes 17, 22)	W7					
Combined Inmetro (Brazil) – Intrinsic Safety, Explosion Proof and Type „N“	(Notes 10, 17, 22)	W8					
Technical Regulations Customs Union (EAC) Intrinsic Safety Ex ia for Belarus	(Notes 16, 17, 22)	WF					
Technical Regulations Customs Union (EAC) Explosion Proof Ex d for Belarus	(Notes 10, 17, 22)	WG					
Technical Regulations Customs Union (EAC) combined Ex ia and Ex d for Belarus	(Notes 10, 17, 22)	WH					
Kosha (Korea) Intrinsic Safety Ex ia IIC T6, IP67	(Notes 2, 14, 17, 22)	WM					
Kosha (Korea) Explosion Proof Ex d IIC T6, IP67	(Notes 2, 10, 14, 17, 22)	WN					
Combined Kosha (Korea) – Intrinsic Safety and Explosion Proof	(Notes 2, 10, 14, 17, 22)	WP					
Integral LCD							
Digital LCD integral display with integrated keypad	(Note 14)		L1				
Digital LCD integral display with TTG (Through-The-Glass) activated keypad	(Note 14)		L5				
Integrated digital LCD display (ONLY SELECTABLE WITH OUTPUT CODE 7)	(Note 20)		LS				
External non intrusive Z, S and WP pushbuttons							
Transmitters with external pushbutton (ONLY SELECTABLE WITH OUTPUT CODE 7)				R1			
Mounting bracket (shape and material)							
For pipe/wall mounting – Carbon steel	(Not suitable for AISI housing)				B6		
For pipe/wall mounting – AISI 316 L ss					B7		
Surge							
Surge/Transient Protector	(Note 17)					S2	
Operating manual (multiple selection allowed)							
German (FOR HART, WirelessHART and PROFIBUS VERSIONS)							M1
Italian (ONLY FOR HART VERSIONS)							M2
Spanish (FOR HART, WirelessHART and FOUNDATION Fieldbus VERSIONS)							M3
French (ONLY FOR HART VERSIONS)							M4
English							M5
Portuguese (ONLY FOR HART VERSIONS)							MA
Russian (ONLY FOR HART VERSIONS)							MB

...Ordering information

... Additional ordering information for model 266HSH

		XX	XX	XX	XX	XX
Plates language						
German		T1				
Italian		T2				
Spanish		T3				
French		T4				
Additional tag plate						
Supplemental wired-on stainless steel plate			I1			
Tag and certification stainless steel plates and laser printing of tag			I2			
Tag, certification and supplemental wired-on stainless steel plates and laser printing of tag			I3			
Configuration						
Standard – Pressure = inH2O/ psi at 68 °F; Temperature = deg. F				N2		
Standard – Pressure = inH2O/ psi at 39.2 °F; Temperature = deg. F				N3		
Standard – Pressure = inH2O/ psi at 20 °C; Temperature = deg. C				N4		
Standard – Pressure = inH2O/ psi at 4 °C; Temperature = deg. C				N5		
Custom				N6		
Configured for HART revision 5	(Note 23)			NH		
Preparation procedure						
Oxygen service cleaning (only available with inert fill) Pmax =10 MPa for Galden; Tmax=60 °C/140 °F	(Notes 2, 12, 15, 22)				P1	
Certificates (multiple selection allowed)						
Inspection certificate EN 10204–3.1 of calibration (9-point)						C1
Inspection certificate EN 10204–3.1 of the cleanliness stage	(Note 22)					C3
Inspection certificate EN 10204–3.1 of helium leakage test of the sensor module	(Note 22)					C4
Inspection certificate EN 10204–3.1 of the pressure test						C5
Certificate of compliance with the order EN 10204–2.1 of instrument design						C6
PMI test of wetted parts (FOR SENSOR Z, APPLIES ONLY TO THE PROCESS CONNECTION)	(Note 22)					CT

... Additional ordering information for model 266HSH

				XX	XX	XX	XX	XX	XX
Approvals									
Metrologic Pattern for Russia	(NOT APPLICABLE WITH ANY HAZARDOUS AREA CERTIFICATION)	(Note 22)		Y1					
Metrologic Pattern for Kazakhstan	(NOT APPLICABLE WITH ANY HAZARDOUS AREA CERTIFICATION)	(Note 22)		Y2					
Metrologic Pattern for Belarus	(NOT APPLICABLE WITH ANY HAZARDOUS AREA CERTIFICATION)	(Note 22)		Y4					
Chinese pattern	(NOT APPLICABLE WITH ANY HAZARDOUS AREA CERTIFICATION)	(Note 22)		Y5					
DNV GL approval		(Notes 2, 12, 14, 17)			YA				
Conformity to NAMUR NE 021 (2004)	(NOT APPLICABLE WITH SURGE PROTECTOR CODE “S2”)	(Notes 2, 12, 14, 17, 19, 21)			YE				
NSF/ANSI 61 Drinking Water Certified					YN				
CRN (Canadian Registration Number OF14838.5C)					YR				
Material traceability									
Inspection certificate EN 10204–3.1 of process wetted parts (not for gaskets)		(Note 22)				H3			
Test report EN 10204–2.2 of pressure bearing and process wetted parts (not for gaskets)		(Note 22)				H4			
National radio frequency licence									
Basic countries (Europe, USA, Canada)			(Note 18)				FB		
Argentina			(Note 18)				FA		
United Arab Emirates			(Note 18)				FG		
India			(Note 18)				FI		
Mexico			(Note 18)				FM		
Electrical connection plug									
One certified stainless steel plug (supplied loose with thread according to housing entries)								Z1	
Accessory									
Manifold mounting and pressure test	(NOT AVAILABLE WITH OXYGEN SERVICE CLEANING – PREPARATION PROCEDURE CODE “P1” or FOR SENSOR “Z” or WITH DIN EN837-1 G 1/2 B PROCESS CONNECTION CODE “P”, “D”, “3”)						(Note 22)		A1

Note 1: Suitable for oxygen service
Note 2: Not available with Sensor code W
Note 3: Not available with Sensor code E to S
Note 4: Not available with diaphragm code M, T, C, D
Note 5: Not available with diaphragm code S, A, M, C, 8, 9
Note 6: Not available with diaphragm code S, K, T, A, F, D, E, G, 8, 9
Note 7: Not available with Process connection code E, K, D, F, C, 1, 2, 3
Note 8: Not available with Process connection code B, T, A, P, N, 1, 2, 3
Note 9: Not available with Process connection code E, K, D, F, C, B, T, A, P, N
Note 10: Not available with Housing code J
Note 11: Not available with Sensor code E and F
Note 12: Not available with Sensor code Z
Note 13: Not available with Sensor code E, S, W, Z
Note 14: Not available with Output code 7
Note 15: Not available with Process connection code P, A, N, D, F, C, 3
Note 16: Not available with Housing code A, S, J
Note 17: Not available with Output code 9
Note 18: Not available with Output code 1, 2, 3, 7, 8
Note 19: Not available with Output code 2, 3
Note 20: Not available with Hazardous area certification code WM, WN, WP
Note 21: Not available with Hazardous area certification code EN, E4, E6, EA, EY, EZ, ES, W1, W2, WC, W3, W4, WD, W5, W6, W7, W8, WF, WG, WH, WM, WN, WP
Note 22: Not available NSF/ANSI 61 approval code YN
Note 23: Not available with Output code 2, 3, 9

Standard delivery items (can be differently specified by additional ordering code)

- No drain/vent valves
- General purpose (no electrical certification)
- No display, no mounting bracket, no surge protection
- Short-form leaflet instruction and labels in English (metal nameplate; self-adhesive certification and tag)
- Configuration with kPa and deg. C units
- No test, inspection or material traceability certificates

...Ordering information

BASIC ORDERING INFORMATION model 266NSH Absolute Pressure Transmitter

Select one character or set of characters from each category and specify complete catalog number.
Refer to additional ordering information and specify one or more codes for each transmitter if additional options are required.

BASE MODEL – 1st to 6th characters				**2 6 6 N S H**	**X**	**X**	**X**	**X**	**X**
Absolute Pressure Transmitter – BASE ACCURACY 0.075 %									
SENSOR – Span limits – 7th character									
0.67 and 40 kPa	6.7 and 400 mbar	5 and 300 mmHg			F				
2.67 and 160 kPa	26.7 and 1600 mbar	20 and 1200 mmHg			H				
10 and 600 kPa	0.1 and 6 bar	1.45 and 87 psi			M				
40 and 2400 kPa	0.4 and 24 bar	5.8 and 348 psi			P				
134 and 8000 kPa	1.34 and 80 bar	19.4 and 1160 psi			Q				
267 and 16000 kPa	2.67 and 160 bar	38.7 and 2320 psi			S				
Diaphragm material / Fill fluid (wetted parts) – 8th character									
AISI 316 L ss		Silicone oil			NACE	S			
Hastelloy® C-276		Silicone oil		(Notes 2, 15)	NACE	K			
AISI 316 L ss		Inert fluid – Galden		(Notes 1, 15)	NACE	A			
Hastelloy® C-276		Inert fluid – Galden		(Notes 1, 2, 15)	NACE	F			

continued
see next page

...BASIC ORDERING INFORMATION model 266NSH Absolute Pressure Transmitter

					266NSHXX	X	X	X
Process connection (wetted parts) – 9th character								
AISI 316 L ss	1/2 in. – 14 NPT female				NACE	B		
AISI 316 L ss	1/2 in. – 14 NPT male				NACE	T		
AISI 316 L ss	DIN EN837-1 G 1/2 B			(Note 15)	NACE	P		
AISI 316 L ss	Straight (180°) entry (not available with bracket)			(Note 15)	NACE	A		
AISI 316 L ss	Angle (90°) entry			(Note 15)	NACE	N		
AISI 316 L ss	1/2 in. – 14 NPT through adapter (loose) straight (180°) entry (not available with bracket)			(Note 15)	NACE	I		
AISI 316 L ss	1/2 in. – 14 NPT through adapter (loose) angle (90°) entry			(Note 15)	NACE	G		
Hastelloy® C-276	1/2 in. – 14 NPT female			(Notes 3, 15)	NACE	E		
Hastelloy® C-276	1/2 in. – 14 NPT male			(Notes 3, 15)	NACE	K		
Hastelloy® C-276	DIN EN837-1 G 1/2 B			(Notes 3, 15)	NACE	D		
Hastelloy® C-276	Straight (180°) entry (not available with bracket)			(Notes 3, 15)	NACE	F		
Hastelloy® C-276	Angle (90°) entry			(Notes 3, 15)	NACE	C		
Hastelloy® C-276	1/2 in. – 14 NPT through adapter (loose) straight (180°) entry (not available with bracket)			(Notes 3, 15)	NACE	L		
Hastelloy® C-276	1/2 in. – 14 NPT through adapter (loose) angle (90°) entry			(Notes 3, 15)	NACE	J		
Housing material and electrical connection – 10th character								
Aluminium alloy (barrel version)		1/2 in. – 14 NPT			(Notes 10)		A	
Aluminium alloy (barrel version)		M20 x 1.5 (CM 20)	(TO BE USED for WirelessHART)		(Note 15)		B	
AISI 316 L ss (barrel version) (I2 or I3 required)		1/2 in. – 14 NPT			(Note 10)		S	
AISI 316 L ss (barrel version) (I2 or I3 required)		M20 x 1.5 (CM20)	(TO BE USED for WirelessHART)		(Note 15)		T	
Aluminium alloy (DIN version)		M20 x 1.5 (CM20)	(not Ex d or XP)		(Notes 10, 15)		J	
Output/Additional options – 11th character								
HART and 4 to 20 mA – Standard functionality								7
HART and 4 to 20 mA – Advanced functionality (includes option R1)								1
PROFIBUS PA (includes option R1)								2
FOUNDATION Fieldbus (includes option R1)								3
HART and 4 to 20 mA Safety, certified to IEC 61508 (includes option R1)					(Note 15)			8
WirelessHART (includes option R1)					(Notes 9, 15)			9

NOTE – Option R1 represents the external pushbuttons

...Ordering information

Additional ordering information for model 266NSH

Add one or more 2-digit code(s) after the basic ordering information to select all required options.

				XX	XX
Drain/vent valve material (wetted parts)					
AISI 316 L ss	(Note 4)	NACE		VA	
Hastelloy® C-276	(Note 5)	NACE		VB	
Hazardous area certifications					
ATEX Intrinsic Safety Ex ia			(Note 15)		E1
ATEX Explosion Proof Ex db_td			(Notes 6, 10, 15)		E2
ATEX Intrinsic Safety Ex ic_tc			(Notes 10, 15)		E3
Combined ATEX, IECEx, FM Approvals (USA) and FM Approvals (Canada)			(Notes 6, 10, 15)		EN
FM Approvals (Canada) approval			(Notes 6, 10)		E4
FM Approvals (USA) approval			(Notes 6, 10)		E6
FM Approvals (USA and Canada) Intrinsically Safe					EA
IECEx Intrinsic Safety Ex ia			(Note 15)		E8
IECEx Explosion Proof Ex db_td			(Notes 6, 10, 15)		E9
IECEx Intrinsic Safety Ex ic_tc			(Notes 10, 15)		ER
NEPSI Intrinsic Safety Ex ia			(Notes 10, 15)		EY
NEPSI Explosion Proof Ex d			(Notes 6, 10, 15)		EZ

... Additional ordering information for model 266NSH

		XX	XX	XX	XX	XX	XX
Other hazardous area certifications (ONLY AS ALTERNATIVE TO BASIC CERTIFICATION CODE Ex)							
Technical Regulations Customs Union (EAC) Intrinsic Safety Ex ia for Russia	(Notes 10, 15)	W1					
Technical Regulations Customs Union (EAC) Explosion Proof Ex d for Russia	(Notes 6, 10, 15)	W2					
Technical Regulations Customs Union (EAC) combined Ex ia and Ex d for Russia	(Notes 6, 10, 15)	WC					
Technical Regulations Customs Union (EAC) Intrinsic Safety Ex ia for Kazakhstan	(Notes 10, 15)	W3					
Technical Regulations Customs Union (EAC) Explosion Proof Ex d for Kazakhstan	(Notes 6, 10, 15)	W4					
Technical Regulations Customs Union (EAC) combined Ex ia and Ex d for Kazakhstan	(Notes 6, 10, 15)	WD					
Inmetro (Brazil) Ex ia	(Notes 10, 15)	W5					
Inmetro (Brazil) Ex d	(Notes 6, 10, 15)	W6					
Inmetro (Brazil) Ex nL	(Notes 10, 15)	W7					
Combined Inmetro (Brazil) – Intrinsic Safety, Explosion Proof and Type „N“	(Notes 6, 10, 15)	W8					
Technical Regulations Customs Union (EAC) Intrinsic Safety Ex ia for Belarus	(Notes 10, 15)	WF					
Technical Regulations Customs Union (EAC) Explosion Proof Ex d for Belarus	(Notes 6, 10, 15)	WG					
Technical Regulations Customs Union (EAC) combined Ex ia and Ex d for Belarus	(Notes 6, 10, 15)	WH					
Kosha (Korea) Intrinsic Safety Ex ia IIC T6, IP67	(Notes 7, 10, 15)	WM					
Kosha (Korea) Explosion Proof Ex d IIC T6, IP67	(Notes 6, 7, 10, 15)	WN					
Combined Kosha (Korea) – Intrinsic Safety and Explosion Proof	(Notes 6, 7, 10, 15)	WP					
Integral LCD							
Digital LCD integral display with integrated keypad	(Note 7)		L1				
Digital LCD integral display with TTG (Through-The-Glass) activated keypad	(Note 7)		L5				
Integrated digital LCD display (ONLY SELECTABLE WITH OUTPUT CODE 7)	(Note 13)		LS				
External non intrusive Z, S and WP pushbuttons							
Transmitters with external pushbutton (ONLY SELECTABLE WITH OUTPUT CODE 7)				R1			
Mounting bracket (shape and material)							
For pipe/wall mounting – Carbon steel	(Not suitable for AISI housing)				B6		
For pipe/wall mounting – AISI 316 L ss					B7		
Surge							
Surge/Transient Protector	(Note 10)					S2	
Operating manual (multiple selection allowed)							
German (FOR HART, WirelessHART and PROFIBUS VERSIONS)							M1
Italian (ONLY FOR HART VERSIONS)							M2
Spanish (FOR HART, WirelessHART and FOUNDATION Fieldbus VERSIONS)							M3
French (ONLY FOR HART VERSIONS)							M4
English							M5
Portuguese (ONLY FOR HART VERSIONS)							MA
Russian (ONLY FOR HART VERSIONS)							MB

...Ordering information

... Additional ordering information for model 266NSH

		XX	XX	XX	XX	XX
Plates language						
German		T1				
Italian		T2				
Spanish		T3				
French		T4				
Additional tag plate						
Supplemental wired-on stainless steel plate			I1			
Tag and certification stainless steel plates and laser printing of tag			I2			
Tag, certification and supplemental wired-on stainless steel plates and laser printing of tag			I3			
Configuration						
Standard – Pressure = inH2O/ psi at 68 °F; Temperature = deg. F				N2		
Standard – Pressure = inH2O/ psi at 39.2 °F; Temperature = deg. F				N3		
Standard – Pressure = inH2O/ psi at 20 °C; Temperature = deg. C				N4		
Standard – Pressure = inH2O/ psi at 4 °C; Temperature = deg. C				N5		
Custom				N6		
Configured for HART revision 5	(Note 16)			NH		
Preparation procedure						
Oxygen service cleaning (only available with inert fill) Pmax =10 MPa for Galden; Tmax=60 °C/140 °F		(Notes 8, 15)			P1	
Certificates (multiple selection allowed)						
Inspection certificate EN 10204–3.1 of calibration (9-point)						C1
Inspection certificate EN 10204–3.1 of the cleanliness stage		(Note 15)				C3
Inspection certificate EN 10204–3.1 of helium leakage test of the sensor module		(Note 15)				C4
Inspection certificate EN 10204–3.1 of the pressure test						C5
Certificate of compliance with the order EN 10204–2.1 of instrument design						C6
PMI test of wetted parts		(Note 15)				CT

... Additional ordering information for model 266NSH

				XX	XX	XX	XX	XX	XX
Approvals									
Metrologic Pattern for Russia	(NOT APPLICABLE WITH ANY HAZARDOUS AREA CERTIFICATION)	(Note 15)		Y1					
Metrologic Pattern for Kazakhstan	(NOT APPLICABLE WITH ANY HAZARDOUS AREA CERTIFICATION)	(Note 15)		Y2					
Metrologic Pattern for Belarus	(NOT APPLICABLE WITH ANY HAZARDOUS AREA CERTIFICATION)	(Note 15)		Y4					
Chinese pattern	(NOT APPLICABLE WITH ANY HAZARDOUS AREA CERTIFICATION)	(Note 15)		Y5					
DNV GL approval		(Notes 7, 10)			YA				
Conformity to NAMUR NE 021 (2004)	(NOT APPLICABLE WITH SURGE PROTECTOR CODE “S2”)	(Notes 7, 10, 12, 14)			YE				
NSF/ANSI 61 Drinking Water Certified					YN				
CRN (Canadian Registration Number OF14838.5C)					YR				
Material traceability									
Inspection certificate EN 10204–3.1 of process wetted parts (not for gaskets)		(Note 15)				H3			
Test report EN 10204–2.2 of pressure bearing and process wetted parts (not for gaskets)		(Note 15)				H4			
National radio frequency licence									
Basic countries (Europe, USA, Canada)			(Note 11)				FB		
Argentina			(Note 11)				FA		
United Arab Emirates			(Note 11)				FG		
India			(Note 11)				FI		
Mexico			(Note 11)				FM		
Electrical connection plug									
One certified stainless steel plug (supplied loose with thread according to housing entries)								Z1	
Accessory									
Manifold mounting and pressure test (NOT AVAILABLE WITH OXYGEN SERVICE CLEANING – PREPARATION PROCEDURE CODE “P1” or WITH DIN EN837-1 G 1/2 B PROCESS CONNECTION CODE “P”, “D”)							(Note 15)		A1

Note 1: Suitable for oxygen service
Note 2: Not available with sensor code F
Note 3: Not available with AISI 316 L ss diaphragm code S, A
Note 4: Not available with Process connection code E, K, D, F, C
Note 5: Not available with Process connection code B, T, A, P, N
Note 6: Not available with Housing code J
Note 7: Not available with Output code 7
Note 8: Not available with Process connection code P, A, N, D, F, C
Note 9: Not available with Housing code A, S, J
Note 10: Not available with Output code 9
Note 11: Not available with Output code 1, 2, 3, 7, 8
Note 12: Not available with Output code 2, 3
Note 13: Not available with Hazardous area certification code WM, WN, WP
Note 14: Not available with Hazardous area certification code EN, E4, E6, EA, EY, EZ, ES, W1, W2, WC, W3, W4, WD, W5, W6, W7, W8, WF, WG, WH, WM, WN, WP
Note 15: Not available NSF/ANSI 61 approval code YN
Note 16: Not available with Output code 2, 3, 9

Standard delivery items (can be differently specified by additional ordering code)

- No drain/vent valves
- General purpose (no electrical certification)
- No display, no mounting bracket, no surge protection
- Short-form leaflet instruction and labels in English (metal nameplate; self-adhesive certification and tag)
- Configuration with kPa and deg. C units
- No test, inspection or material traceability certificates

IMPORTANT REMARK FOR ALL MODELS

THE SELECTION OF SUITABLE WETTED PARTS AND FILLING FLUID FOR COMPATIBILITY WITH THE PROCESS MEDIA IS A CUSTOMER'S RESPONSIBILITY, IF NOT OTHERWISE NOTIFIED BEFORE MANUFACTURING.

NACE COMPLIANCE INFORMATION

1 The materials of constructions comply with metallurgical recommendations of NACE MR0175/ISO 15156 for sour oil field production environments. As specific environmental limits may apply to certain materials, please consult latest standard for further details. AISI 316/316 L, Hastelloy C-276, Monel 400 also conform to NACE MR0103 for sour refining environments.

2 NACE MR-01-75 addresses bolting requirements in two classes:
- Exposed bolts: bolts directly exposed to the sour environment or buried, incapsulated or anyway not exposed to atmosphere
- Non exposed bolts: the bolting must not be directly exposed to sour environments and must be directly exposed to the atmosphere at all times.

® Hastelloy is a registered trademark of Haynes International
® Monel and Inconel are registered trademarks of Huntington Alloys Corporation
® Galden is a registered trademark of Solvay Specialty Polymers Italy, SpA
® HART and WirelessHART are protected trademarks of FieldComm Group, Inc
® PROFIBUS is a registered trademark of PROFIBUS and PROFINET International (PI)
™ FOUNDATION Fieldbus is a trademark of Fieldbus Foundation

Castel Maggiore (BO) 40013
Via Lirone 60/i

e-mail: info@eurotecsrl.com
Tel: +39 051/6321595
Website: www.eurotecsrl.com

C.F.: 04103780377
P.I.: 01596581205

—

ABB Ltd.
Measurement & Analytics
Howard Road St. Neots
Cambridgeshire, PE19 8EU
UK
Tel: +44 (0)870 600 6122
Fax: +44 (0)1480 213 339
Email: enquiries.mp.uk@gb.abb.com

ABB S.p.A.
Measurement & Analytics
Via Luigi Vaccani 4
22016 Tremezzina (CO)
Italy
Tel: +39 0344 58111

ABB Inc.
Measurement & Analytics
125 E. County Line Road
Warminster, PA 18974
USA
Tel: +1 215 674 6000
Fax: +1 215 674 7183

abb.com/measurement

We reserve the right to make technical changes or modify the contents of this document without prior notice. With regard to purchase orders, the agreed particulars shall prevail.
ABB does not accept any responsibility whatsoever for potential errors or possible lack of information in this document.

We reserve all rights in this document and in the subject matter and illustrations contained therein.
Any reproduction, disclosure to third parties or utilization of its contents – in whole or in parts – is forbidden without prior written consent of ABB.

© Copyright 2020 ABB
All rights reserved

3KXP200015R1001

DS/266HSH/NSH-EN Rev. R 02.2020