ABB MEASUREMENT & ANALYTICS | DATA SHEET

Model 266HSH

Gauge pressure transmitter low power consumption (1 to 5 V DC and HART)

Measurement made easy
Engineered solutions for all applications

Base accuracy
- **0.15 % of calibrated span**

Reliable sensing system coupled with very latest digital technologies
- provides large turn down ratio up to 100:1

Version for low consumption
- 1 to 5 V DC output with 3 mA maximum consumption

Product in compliance with Directive 2011/65/UE (RoHS II)

Functional specifications

Range and span limits

Sensor code	Upper range limit (URL)	Lower range limit (LRL) - NOTE 266HSH	Minimum span 266HSH
P	2400 kPa 24 bar 348 psi	-100 kPa -1 bar -14.5 psi	24 kPa 0.24 bar 3.5 psi
Q	8000 kPa 80 bar 1160 psi	-100 kPa -1 bar -14.5 psi	80 kPa 0.8 bar 11.6 psi
S	16000 kPa 160 bar 2320 psi	-100 kPa -1 bar -14.5 psi	160 kPa 1.6 bar 23.2 psi
W	70000 kPa 700 bar 10150 psi	-100 kPa -1 bar -14.5 psi	7000 kPa 70 bar 1015 psi

NOTE: with atmospheric pressure reference of 1 bar (14.5 psi)

Span limits

Maximum span = URL
IT IS RECOMMENDED TO SELECT THE TRANSMITTER SENSOR CODE PROVIDING THE TURNDOWN VALUE AS LOWEST AS POSSIBLE TO OPTIMIZE PERFORMANCE CHARACTERISTICS.

Zero suppression and elevation

- The zero position and span can be set to any value within the measuring range limits listed in the table if:
- Set span ≥ minimum span

Damping

Configurable time constant between 0 and 60 s.
This is in addition to the sensor response time.

Warm-up time

Ready for operation as per specifications in less than 10 s with minimum damping.

Insulation resistance

>100 MΩ at 500 V DC (between terminals and ground).

Operative limits

Pressure limits:

Overpressure limits

Without damage to the transmitter

Sensor code	Fill fluid	Overpressure limits
P to S	Silicone oil	0.07 kPa abs, 0.7 mbar abs, 0.5 mmHg and 21 MPa, 210 bar, 3045 psi
W	Silicone oil	0.07 kPa abs, 0.7 mbar abs, 0.5 mmHg and 105 MPa, 1050 bar, 15225 psi

Proof pressure

The transmitter can be exposed without leaking to line pressure of up to the following values:

Sensor code	Proof pressure
P to S	40.25 MPa, 402.5 bar, 5836 psi
W	171.5 MPa, 1715 bar, 24868 psi

Meet ANSI/ISA–S 82.03 hydrostatic test requirements.

Temperature limits °C (°F):

Ambient

is the operating temperature

Models 266HSH	Ambient temperature limits
Silicone oil for sensor P to W	–40 and 85 °C (–40 and 185 °F)

IMPORTANT

For Hazardous Atmosphere applications see the temperature range specified on the certificate/approval relevant to the aimed type of protection.

Models 266HSH	Ambient temperature limits
LCD integral display	–40 and 85 °C (–40 and 185 °F)

LCD display may not be clearly readable below –20°C (–4°F) or above +70°C (+158°F)

Process

Models 266HSH	Process temperature limits
Silicone oil for sensor P to W	–40 and 121 °C (–40 and 250 °F)(1)

(1) 100 °C (212 °F) for application below atmospheric pressure

Storage

Models 266HSH	Ambient temperature limits
Storage limits	–50 and 85 °C (–58 and 185 °F)
LCD integral display	–40 and 85 °C (–40 and 185 °F)

Environmental limits

Electromagnetic compatibility (EMC)

Comply with EN 61326-1.
Surge immunity level (with surge protector): 4 kV (according to IEC 1000-4–5 EN 61000–4–5)

Pressure Equipment Directive (PED)

Comply with 2014/68/UE to standard ANSI/ISA 61010-1:2012

- Category III Module H for PS ≥ than 20 MPa, 200 bar
- Sound Engineering Practice (SEP) for PS < 20 MPa, 200 bar

Humidity

Relative humidity: Up to 100 %.
Condensing, icing: admissible.

Vibration resistance

Acceleration up to 2 g at frequencies of up to 1000 Hz (according to IEC 60068-2-6).
Acceleration limited to 1 g for housing out of stainless steel.

Shock resistance

Acceleration: 50 g
Duration: 11 ms
(according to IEC 60068-2-27).

Wet and dust-laden atmospheres

The transmitter is dust and sand tight and protected against immersion effects as defined by EN 60529 (1989) to IP 67 (IP 68 on request) or by NEMA Type 4X.

Hazardous atmospheres

With or without integral LCD display

FM Approvals US and FM Approvals Canada (code EB):

- Explosionproof (US): Class I, Div. 1, Groups A, B, C, D
- Explosionproof (Canada): Class I, Div. 1, Groups B, C, D
- Dust ignitionproof : Class II, Div. 1, Groups E, F, G
- Suitable for: Class II, Div. 2, Groups F, G; Class III, Div.1, 2

REFER TO CERTIFICATES FOR AMBIENT TEMPERATURE RANGES (WITHIN THE LIMITS OF -50 TO 85°C) RELATED TO THE DIFFERENT TEMPERATURE CLASSES.
SENSOR CODE "W" IS NOT IN COMPLIANCE WITH ISA 12.27.01 FOR SEALING REQUIREMENTS.

Electrical data and options

Optional indicators

Integrated digital display (code LS)

Wide screen LCD, 128 x 64 pixel,
52.5 x 27.2 mm (2.06 x 1.07 in.) dot matrix.
User selectable application-specific visualizations.
Display may also indicate static pressure, sensor temperature and diagnostic messages.

Optional surge protection

Up to 4kV

- voltage 1.2 µs rise time / 50 µs delay time to half value
- current 8 µs rise time / 20 µs delay time to half value

Low power consumption 1 to 5 V DC output with HART®

Power supply

The transmitter operates from 8 to 30 V DC with no load and is protected against reverse polarity connection.

Current draw

< 3 mA

Ripple

less than 2 %

Output load

> 100 kΩ

Output signal

Two–wire 1 to 5 V DC, user-selectable for linear or 22 points linearization table (i.e. for horizontal or spherical tank level measurement).
HART® 7 communication provides digital process variable superimposed on voltage signal, with protocol based on Bell 202 FSK standard.
A minimum of 250 Ω is required for HART communication.

Output range

Overload condition

- Lower limit: 0.97 V DC
- Upper limit: 5.2 V DC

Alarm voltage

- Low limit: ≤ 0.95 V DC
- High limit: ≥ 5.4 V DC

Factory setting: high alarm voltage

Specification - measuring accuracy

Stated at reference condition to IEC 60770 ambient temperature of 20 °C (68 °F), relative humidity of 65 %, atmospheric pressure of 1013 hPa (1013 mbar), mounting position with vertical diaphragm and zero based range for transmitter with isolating diaphragms in AISI 316 L ss or Hastelloy and silicone oil fill and HART digital trim values equal to 1 V and to 5 V span end points, in linear mode.
Unless otherwise specified, errors are quoted as % of span.
Some performance referring to the Upper Range Limit are affected by the actual turndown (TD) as ratio between Upper Range Limit (URL) and calibrated span.
IT IS RECOMMENDED TO SELECT THE TRANSMITTER SENSOR CODE PROVIDING THE TURNDOWN VALUE AS LOWEST AS POSSIBLE TO OPTIMIZE PERFORMANCE CHARACTERISTICS.

Dynamic performance (according to IEC 61298–1 definition)

Sensor code	Time constant (63.2 % of total step change)
P to S	≤ 70 ms
W	≤ 150 ms
Dead time for all sensors	30 ms

Response time (total) = dead time + time constant

Model	Sensor	For TD range	Measuring error
266HSH	P to S	From 1:1 to 10:1	± 0.15 %
	P to S	From 10:1 to 100:1	± (0.015 x TD) %
	W	From 1:1 to 5:1	± 0.15 %
	W	From 5:1 to 10:1	± (0.03 x TD) %

Ambient temperature

per 20K change between the limits of –40 °C to +85 °C (per 36 °F change between the limits of –40 to +185 °F):

Model	Sensor	For TD up to	Measuring error
266HSH	P and Q	10:1	± (0.06 % URL + 0.09 % span)
	S and W	10:1	± (0.08 % URL + 0.13 % span)

Supply voltage

Within voltage/load specified limits the total effect is less than 0.005 % of URL per volt.

Load

Within load/voltage specified limits the total effect is negligible.

Electromagnetic field

Meets all the requirements of EN 61326 for surge immunity level.

Common mode interference

No effect from 100Vrms @ 50Hz, or 50 V DC

Mounting position

No effect for rotation on diaphragm plane. A tilt up to 90° from vertical causes a zero shifts up to 0.5 kPa, 5 mbar or 2 inH2O, which can be corrected with zero adjustment.
No span effect.

Stability

±0.15 % of URL over a ten years period for sensors P to W.

Specification – physical

(Refer to ordering information sheets for variant availability related to specific model or versions code)

Materials

Process isolating diaphragms (*)
AISI 316 L ss; Hastelloy C-276™.

Process connection (*)
AISI 316 L ss; Hastelloy C-276™.

Sensor fill fluid
Silicone oil.

Mounting bracket (**)
Zinc plated carbon steel with chrome passivation; AISI 316 L ss.

Sensor housing
AISI 316 L ss.

Electronic housing and covers
Aluminium alloy (copper content ≤ 0.3 %) with baked epoxy finish (colour RAL9002); AISI 316 L ss.

Covers O-ring
Buna N.

Local adjustments (zero and span)

- Internal for zero and span (on communication board).

Plates

Transmitter nameplate: AISI 316 ss screwed to the electronics housing.
Certification plate and optional tag/calibration plate : selfadhesive attached to the electronics housing or AISI 316 ss fastened to the electronics housing with rivets or screws.
Optional wired-on customer data plate: AISI 316 ss.
Laser printing on metal or thermal printing on self-adhesive.

Calibration

Standard: at maximum span, zero based range, ambient temperature and pressure;
Optional: at specified range and ambient conditions.

Optional extras

Mounting brackets (code Bx)
For 60mm. (2in) pipes or wall mounting.

Display (code L9)
4-position (at 90°) user orientable.

Optional plates (code Ix)
Code I2: plate for tag (up to 31 characters) and calibration details (up to 31 characters: lower and upper range values and engineering unit) fixed onto transmitter housing.
Code I1: AISI 316 ss wired-on plate with laser printed customized data (4 lines of 32 characters with 4 mm/ 0.16 in. height).

Surge protection (code S2)

Test Certificates (test, calibration, material traceability) (codes Cx and Hx)

Tag and manual language (codes Tx and Mx)

Manifold mounting (code A1)
Factory mounting and pressure test of ABB M26 manifolds.

(*) Wetted parts of the transmitter.
(**) U-bolt material: high-strength alloy steel or AISI 316 L ss; bolts/nuts material: high-strength alloy steel or AISI 316 ss.

Process connections

1/2 in.– 14 NPT male or female

Electrical connections

Two 1/2 in. – 14 NPT threaded conduit entries, direct on housing

Terminal block

HART version: three terminals for signal/external meter wiring up to 2.5 mm2 (14 AWG), also connection points for test and communication purposes.

Grounding

Internal and external 6 mm2 (10 AWG) ground termination points are provided.

Mounting position

Transmitter can be mounted in any position.
Electronics housing may be rotated to any position. A positive stop prevents over travel.

Mass (without options)

2.1 kg approx (4.6 lb). Add 650 g (1.5 lb) for packing.

Packing

Carton 27 x 24 x 20 cm approx (11 x 10 x 8 in.).

Configuration

Transmitter with HART communication

Standard configuration

Transmitters are factory calibrated to customer's specified range. Calibrated range and tag number are stamped on the tag plate. If a calibration range and tag data are not specified, the transmitter will be supplied with the plate left blank and configured as follows:

Engineering Unit	kPa
1 V DC	Zero
5 V DC	Upper Range Limit (URL)
Output	Linear
Damping	1 s
Transmitter failure mode	Upscale
Software tag (8 characters max)	Blank
Optional LCD display	PV in kPa; output in V DC and in percentage on bargraph

Any or all the above configurable parameters, including Lower range–value and Upper range-value which must be the same unit of measure, can be easily changed using the HART hand–held communicator or by a PC running the configuration software with DTM for 266 models. The transmitter database is customized with specified flange type and material, O–ring and drain/vent materials and meter code option.

Customer-specific configuration (option N6)

The following data may be specified in addition to the standard configuration parameters:

Descriptor	16 alphanumeric characters
Message	32 alphanumeric characters
Date	Day, month, year

For HART protocol available engineering units of pressure measure are :
Pa, kPa, MPa
inH2O@4 °C, mmH2O@4 °C, psi
inH2O@20 °C, ftH2O@20 °C, mmH2O@20 °C
inHg, mmHg, Torr
g/cm2, kg/cm2, atm
mbar, bar

Dimensions

(not for construction unless certified) – dimensions in mm (in.)

266HSH Transmitter with barrel housing - 1/2 NPT female connection for sensor P, Q and S

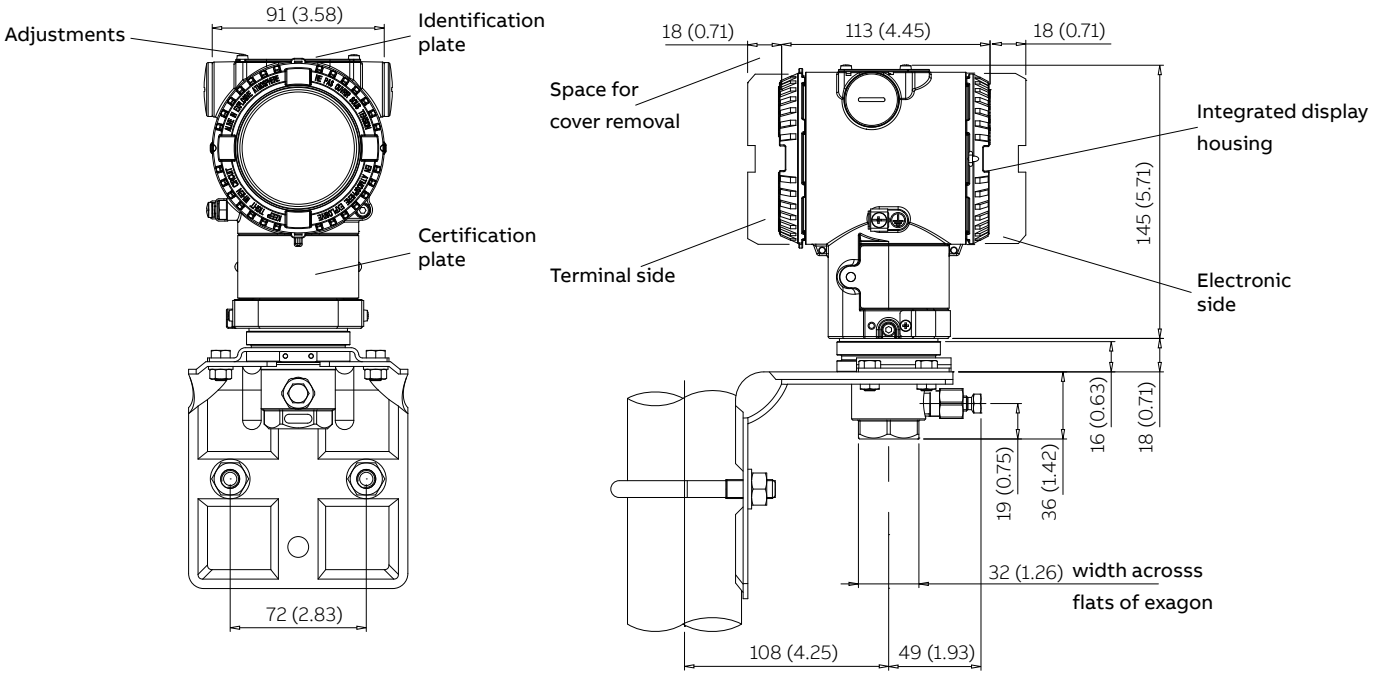

266HSH Transmitter with barrel housing - 1/2 in. NPT female connection for sensor W

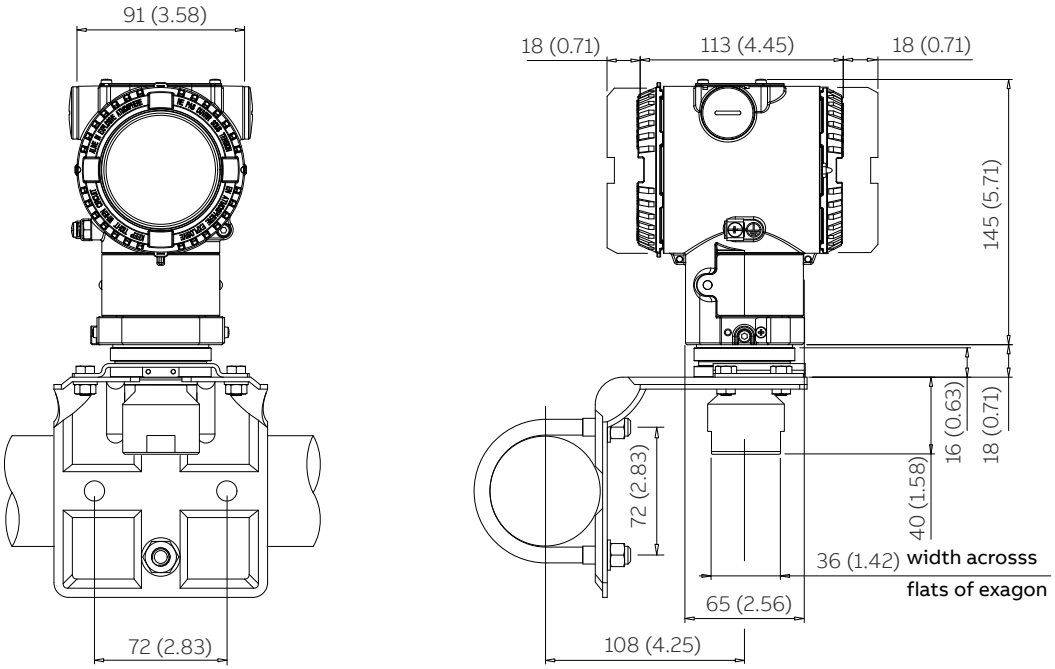

...Dimensions

(not for construction unless certified) – dimensions in mm (in.)

266HSH Transmitter with barrel housing - 1/2 NPT male connection for sensor P, Q and S

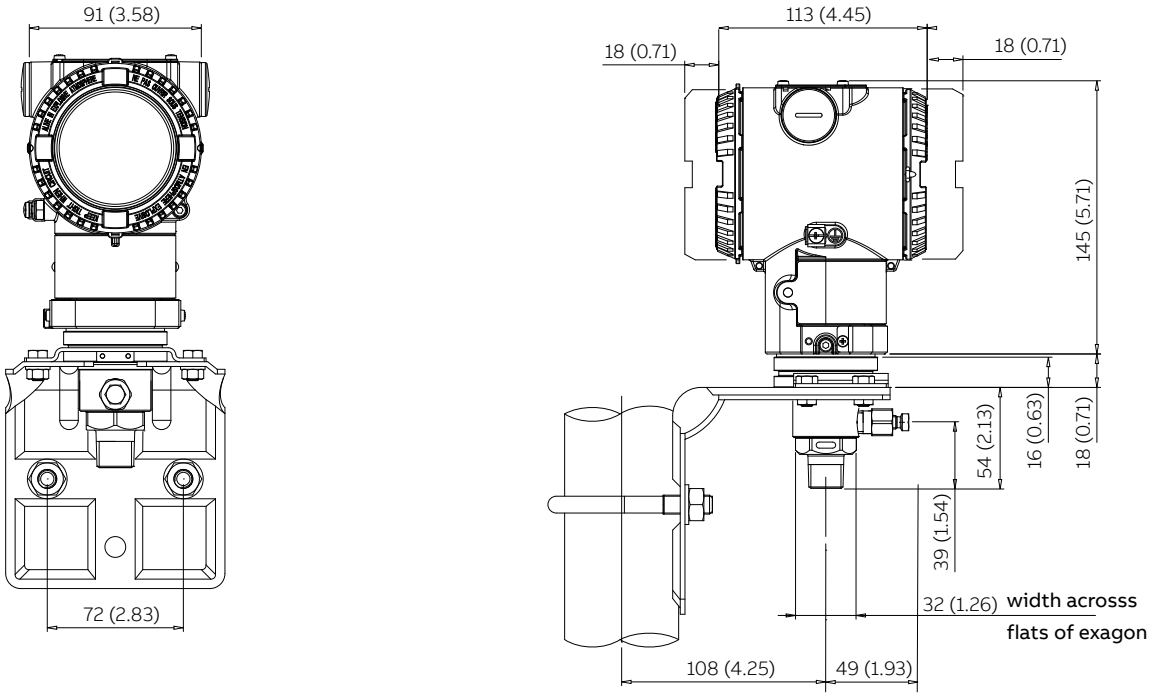

266HSH Transmitter with barrel housing - 1/2 NPT male connection for sensor W

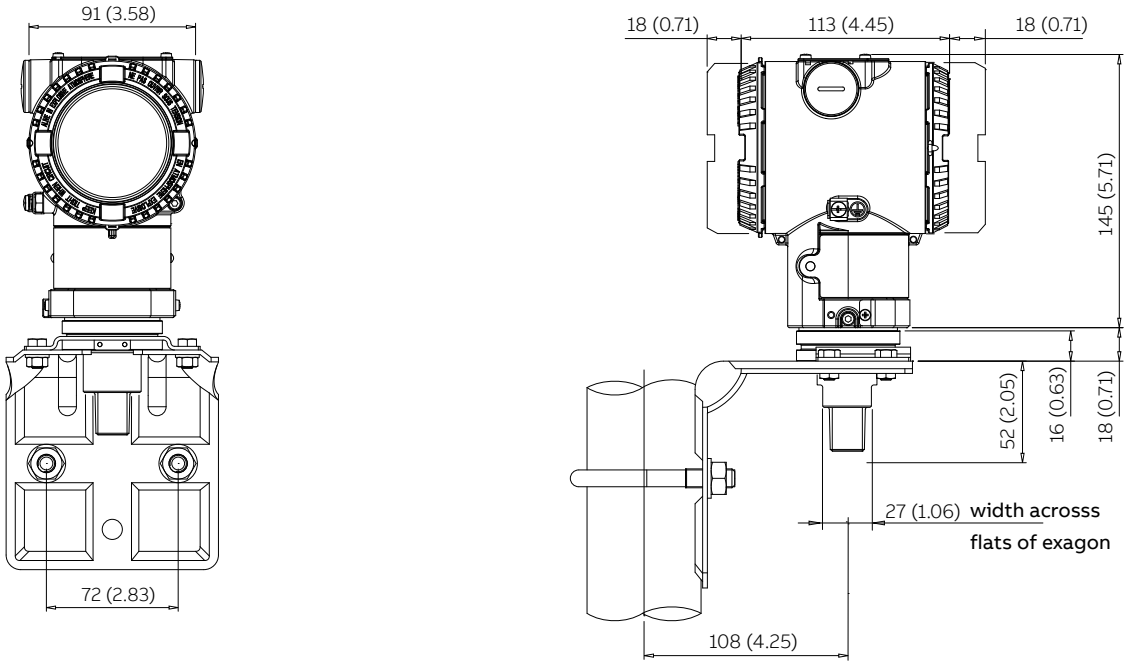

Electrical connections

1...5 V DC HART Version

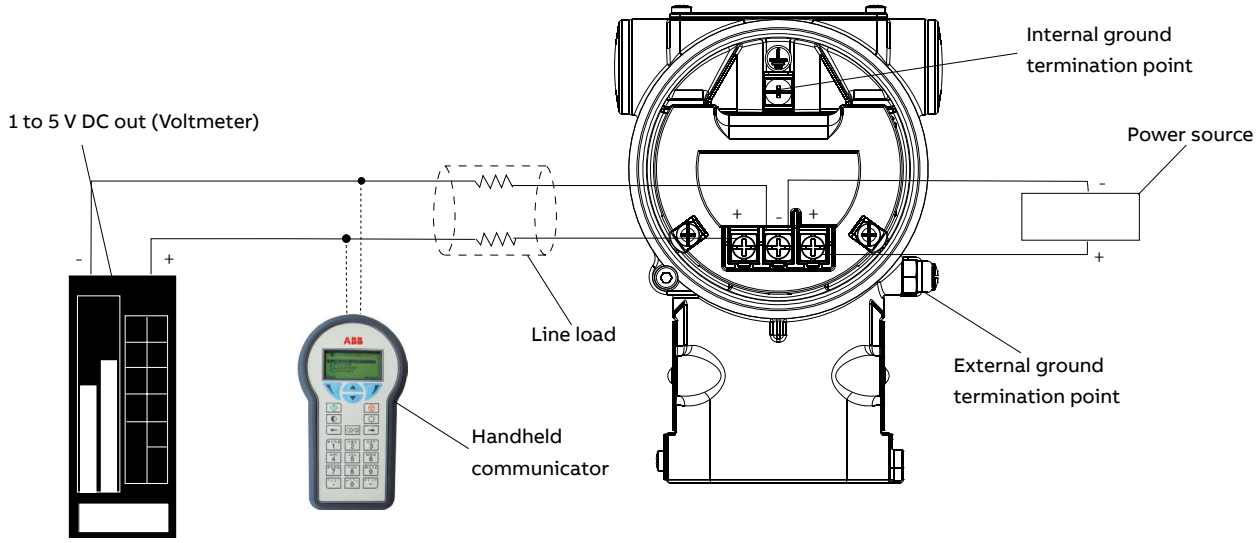

HART handheld communicator may be connected at any wiring termination point in the loop, providing the minimum resistance is 250 ohm. If this is less than 250 ohm, additional resistance should be added to allow communications.

Ordering information

Basic ordering information model 266HSH Gauge Pressure Transmitter low power consumption (1 to 5 V DC and HART)

Select one character or set of characters from each category and specify complete catalog number.

Refer to additional ordering information and specify one or more codes for each transmitter if additional options are required.

Base model - 1st to 6th characters					**2 6 6 H S H**	**X**	**X**	**X**	**X**	**X**
Gauge pressure transmitter, base accuracy 0.15 %										
Sensor Span Limits – 7th character										
24 and 2400 kPa	0.24 and 24 bar	3.5 and 348 psi				P				
80 and 8000 kPa	0.8 and 80 bar	11.6 and 1160 psi				Q				
160 and 16000 kPa	1.6 and 160 bar	23.2 and 2320 psi				S				
7000 and 70000 kPa	70 and 700 bar	1015 and 10150 psi				W				
Diaphragm material / Fill fluid (wetted parts) - 8th character										
AISI 316L SST (1.4435)		Silicone oil	NACE				S			
Hastelloy® C-276		Silicone oil	NACE				K			
Process connection (wetted parts) - 9th character										
AISI 316L ss		1/2 in. - 14 NPT female	NACE					B		
AISI 316L ss		1/2 in. - 14 NPT male	NACE					T		
Hastelloy® C-276		1/2 in. - 14 NPT female	NACE	(Note 1)				E		
Hastelloy® C-276		1/2 in. - 14 NPT male	NACE	(Note 1)				K		
Housing material and electrical connection - 10th character										
Aluminium alloy (barrel version)		1/2 in. - 14 NPT							A	
AISI 316 L ss (barrel version) (I2 or I3 required)		1/2 in. - 14 NPT							S	
Output/Additional options - 11th character										
Low power consumption 1 to 5 V DC and HART No additional options										V
Low power consumption 1 to 5 V DC and HART Options requested by “Additional ordering code”										4

Additional ordering information model 266HSH Gauge Pressure Transmitter low power consumption (1 to 5 V DC and HART)

Add one or more 2-digit code(s) after the basic ordering information to select all required options

				XX	XX	XX	XX	XX	XX
Drain/vent valve (material and position) (wetted parts)									
AISI 316 L ss	NACE	(Notes 2, 4)	VA						
Hastelloy C-276™	NACE	(Notes 3, 4)	VB						
Hazardous area certifications									
FM Approvals (USA and Canada) Explosion Proof									
(SENSOR CODE "W" NOT IN COMPLIANCE WITH ISA 12.27.01 FOR SEALING REQUIREMENTS)					EB				
Integral LCD									
Integrated digital LCD display						LS			
Mounting bracket (shape and material)									
For pipe/wall mounting - Carbon steel	(Not suitable for AISI housing)						B6		
For pipe/wall mounting - AISI 316 L ss							B7		
Surge									
Surge/Transient Protector								S2	
Operating manual (multiple selection allowed)									
Spanish									M3
French									M4
English									M5

...Ordering information

...Additional ordering information model 266HSH Gauge Pressure Transmitter low power consumption (1 to 5 V DC and HART)

Add one or more 2-digit code(s) after the basic ordering information to select all required options

	XX	XX	XX	XX	XX	XX
Plates language						
Spanish	T3					
French	T4					
Additional tag plate						
Supplemental wired-on stainless steel plate		I1				
Tag and certification stainless steel plates and laser printing of tag		I2				
Tag, certification and supplemental wired-on stainless steel plates and laser printing of tag		I3				
Configuration						
Standard – Pressure = inH2O/psi at 68 °F; Temperature = deg. F			N2			
Standard – Pressure = inH2O/psi at 39.2 °F; Temperature = deg. F			N3			
Standard – Pressure = inH2O/psi at 20 °C; Temperature = deg. C			N4			
Standard – Pressure = inH2O/psi at 4 °C; Temperature = deg. C			N5			
Custom			N6			
Certificates (up to 2 different selections allowed)						
Inspection certificate EN 10204–3.1 of calibration (9-point)				C1		
Inspection certificate EN 10204–3.1 of the pressure test				C5		
PMI test of wetted parts				CT		
Material traceability						
Certificate of compliance with the order EN 10204–2.1 of process wetted parts					H1	
Inspection certificate EN 10204–3.1 of process wetted parts					H3	
Test report EN 10204–2.2 of pressure bearing and process wetted parts					H4	
Accessory						
Manifold mounting and pressure test (10000 psi MAXIMUM)						A1

Note 1: Not available with diaphragm code S
Note 2: Not available with Process connection code E, K
Note 3: Not available with Process connection code B, T
Note 4: Not available with sensor code W

Standard delivery items (can be differently specified by additional ordering code)

- No drain/vent valves
- General purpose (no electrical certification)
- No display, no mounting bracket, no surge protection
- Multilanguage short-form operating instruction manual and labels in english (metal nameplate; self-adhesive certification and tag)
- Configuration with kPa and deg. C units
- No test, inspection or material traceability certificates

Trademarks

™ Hastelloy C-276 is a Cabot Corporation trademark

Castel Maggiore (BO) 40013
Via Lirone 60/i

e-mail: info@eurotecsrl.com
Tel: +39 051/6321595
Website: www.eurotecsrl.com

C.F.: 04103780377
P.I.: 01596581205

—

ABB Ltd.
Measurement & Analytics
Howard Road St. Neots
Cambridgeshire PE19 8EU
UK
Tel: +44 (0)1480 475321
Fax: +44 (0)1480 217948

ABB S.p.A.
Measurement & Analytics
Via Luigi Vaccani 4
22016 Tremezzina Loc. Ossuccio (CO)
Italy
Tel: +39 0344 58111

ABB Inc.
Measurement & Analytics
125 E. County Line Road
Warminster PA 18974
USA
Tel: +1 215 674 6000
Fax: +1 215 674 7183

abb.com/measurement

We reserve the right to make technical changes or modify the contents of this document without prior notice. With regard to purchase orders, the agreed particulars shall prevail.
ABB does not accept any responsibility whatsoever for potential errors or possible lack of information in this document.

We reserve all rights in this document and in the subject matter and illustrations contained therein.
Any reproduction, disclosure to third parties or utilization of its contents – in whole or in parts – is forbidden without prior written consent of ABB.

© Copyright 2018 ABB
All rights reserved

3KXP226600R1001

DS/266HSH/ LOWP-EN REV. D 02.2019